2 Montgomery Street, 3rd Floor, Jersey City, NJ 07302
PORT AUTHORITY TRANS-HUDSON CORPORATION

Date 09/27/2013

REQUEST FOR QUOTATION

Collective# 0000034976

Bid Due Date 10/16/2013

Bids must be received no later than 11:00 AM on the above Bid Due Date.

Deliver Goods/Services To:
Path Harrison Stockroom
Foot of Cape May St.
Harrison NJ 07029

Contact person/Telephone
Nancy Ubilla/201-395-3402

Quantity	Description	Unit Price	Total
	Supply and deliver Window Panes per drawing specifications. Delivery to: PATH - HARRISON STOCKROOM FOOT OF CAPE MAY ROAD HARRISON, NJ 07029 DELIVERY HOURS ARE MONDAYS-FRIDAYS BETWEEN THE HOURS OF 7:30AM - 2:30PM A price preference of 10 % is available for NY/NJ Minority and Women Business Enterprises (M/WBE) or 5% for NY/NJ Small Business Enterprises (SBE) certified by the Port Authority (PA) by the day before bid opening for awards not exceeding $1,000,000. My firm was certified as a _____on_____. DELIVERY LEAD TIME: _____.		
	PLEASE QUOTE FULLY DELIVERED PRICES — **PAYMENT TERMS**	**Total Delivered Price**	

This Quotation is subject to the terms and conditions set forth on the back page hereof. Bidder is advised to read these before signing.

We have read the instructions and, if favored with an order, we agree to furnish the items enumerated herein at the prices and under the conditions indicated.

Signed _____
Firm Name _____
Telephone number_____Date_____
Fax Number_____
Federal Taxpayer ID _____

Bidder Must Sign In Two Places

NOTICE TO BIDDERS: Unless the following term of assurance that the above offer is irrevocable is signed, the offer submitted herein shall not be deemed to be complete.

The foregoing offer shall be irrevocable for 90 days after the date on which The PORT AUTHORITY TRANS-HUDSON CORPORATION opens this proposal.

Signed_____Date_____
Firm Name_____

REQUEST FOR QUOTATION

Bid Due Date
10/16/2013

Quantity	Description	Unit Price	Total
	This is a Formal Bid Invitation Mail Sealed Bids to: The Port Authority of NY & NJ Attn: Bid Custodian Procurement Department 2 Montgomery Street, 3rd Floor Jersey City, NJ 07302 by the date and time listed above, where it will be publicly opened and read. Bids are only accepted Monday through Friday, excluding Port Authority holidays,between the hours of 8 A.M. & 5 P.M., via regular mail,express delivery service or hand delivery. If you do not use or have an envelope provided, you must clearly mark the outside envelope/package with 'BID ENCLOSED' and show the company name, address, as well as Bid number and Due date as stated on this bid document. A valid photo id is required to gain access into the building, to attend the bid opening or hand deliver a bid.		
24 EA	0880175		
	PLEASE QUOTE FULLY DELIVERED PRICES	**PAYMENT TERMS**	**Total Delivered Price**

This Quotation is subject to the terms and conditions set forth on the back page hereof. Bidder is advised to read these before signing.

We have read the instructions and, if favored with an order, we agree to furnish the items enumerated herein at the prices and under the conditions indicated.

Signed _____
Firm Name _____
Telephone number_____Date_____
Fax Number_____
Federal Taxpayer ID _____

Bidder Must Sign In Two Places

NOTICE TO BIDDERS: Unless the following term of assurance that the above offer is irrevocable is signed, the offer submitted herein shall not be deemed to be complete.

The foregoing offer shall be irrevocable for 90 days after the date on which The PORT AUTHORITY TRANS-HUDSON CORPORATION opens this proposal.

Signed_____Date_____
Firm Name_____

2 Montgomery Street, 3rd Floor, Jersey City, NJ 07302
PORT AUTHORITY TRANS-HUDSON CORPORATION

REQUEST FOR QUOTATION

Bid Due Date
10/16/2013

Quantity	Description	Unit Price	Total
	Pane,Small Side Window,KRC Drawing #61506-03534.		
24 EA	0880176 Pane,Window,#1 End Vestibule,KRC Drawing #62204-03507.		
24 EA	0880177 Pane,Motorman Sash Window,KRC Drawing #61511-03509.		
24 EA	0880178 Pane,Conductor Cab Sash Window,KRC Drawing #61511-03508.		
24 EA	0880179 Pane,Side Door Window,KRC Drawing #62004-03511.		
24 EA	0880180 Pane,Cab Partition Window,KRC Drawing #65483-03501.		
24 EA	0880181 Pane,Emergency Window,Top with Destination Sign,KRC Drawing #61506-03533.		
	PLEASE QUOTE FULLY DELIVERED PRICES	**PAYMENT TERMS**	**Total Delivered Price**

This Quotation is subject to the terms and conditions set forth on the back page hereof. Bidder is advised to read these before signing.

We have read the instructions and, if favored with an order, we agree to furnish the items enumerated herein at the prices and under the conditions indicated.

Signed _____
Firm Name _____
Telephone number_____Date_____
Fax Number_____
Federal Taxpayer ID _____

Bidder Must Sign In Two Places

NOTICE TO BIDDERS: Unless the following term of assurance that the above offer is irrevocable is signed, the offer submitted herein shall not be deemed to be complete.

The foregoing offer shall be irrevocable for 90 days after the date on which The PORT AUTHORITY TRANS-HUDSON CORPORATION opens this proposal.

Signed_____Date_____
Firm Name_____

2 Montgomery Street, 3rd Floor, Jersey City, NJ 07302
PORT AUTHORITY TRANS-HUDSON CORPORATION

REQUEST FOR QUOTATION

Bid Due Date
10/16/2013

Quantity	Description	Unit Price	Total
48 EA	0880182 Pane,Emergency Window,Bottom,KRC Drawing #61506-03531.		
24 EA	0880183 Pane,Emergency Window,top with Vandal Film,KRC Drawing #61506-03532.		
24 EA	0880184 Windshield,Heated Laminated Glass,for Cab,KRC Drawing #61602-03512.		
24 EA	0880185 Pane,Window #2 End Vestibule Door,KRC Drawing #62204-03508.		
	PLEASE QUOTE FULLY DELIVERED PRICES	**Total Delivered Price**	

PAYMENT TERMS

This Quotation is subject to the terms and conditions set forth on the back page hereof. Bidder is advised to read these before signing.

We have read the instructions and, if favored with an order, we agree to furnish the items enumerated herein at the prices and under the conditions indicated.

Signed _____
Firm Name _____
Telephone number_____Date_____
Fax Number_____
Federal Taxpayer ID _____

Bidder Must Sign In Two Places

NOTICE TO BIDDERS: Unless the following term of assurance that the above offer is irrevocable is signed, the offer submitted herein shall not be deemed to be complete.

The foregoing offer shall be irrevocable for 90 days after the date on which The PORT AUTHORITY TRANS-HUDSON CORPORATION opens this proposal.

Signed_____Date_____
Firm Name_____

PA280/9-03

TERMS AND CONDITIONS

1. The Port Authority (PA) reserves the right to request information relating to seller's responsiblity, experience and capability to perform the work.
2. Unless otherwise provided, complete shipment of all items must be in one delivery FOB delivery point. Payment will not be made on partial deliveries unless authorized in advance by the party to be charged and the discount, if any, will be taken on the total order.
3. PA payment terms are net 30 days. Cash discounts for prompt payment of invoices may be taken but will not be considered in determining award, except in the case of tie bids.
4. Separate unit and total FOB delivered prices must be shown.
5. Sales to the PA and to PATH are currently exempt from New York and New Jersey State and local taxes and generally from federal taxation. The seller certifies that there are no federal, state, municipal or any other taxes included in the prices shown hereon.
6. The PA shall have the absolute right to reject any or all proposals or to accept any proposal in whole or part and to waive defects in proposals.
7. Unless the phrase "no substitute" is indicated, bidder may offer alternate manufacturer / brands, which shall be subject to Port Authority approval. Please indicate details of product being offered with bid.
8. Acceptance of seller's offer will be only by Purchase Order Form signed by the PA. No change shall be made in the agreement except in writing.
9. If the seller fails to perform in accordance with the terms of this purchase order, the PA may obtain the goods or services from another contractor and charge the seller the difference in price, if any, a reletting cost of $100, plus any other damages to the PA.
10. Upon request, sellers are encouraged to extend the terms and conditions of any terms agreement with the PA to other government and quasi-government entities by separate agreement.
11. By signing this quotation or bid, the seller certifies to all statements on Form PA 3764A regarding non-collusive bidding; compliance with the PA Code of Ethics; and the existence of investigations, indictments, convictions, suspensions, terminations, debarments and other stated occurrences to assist the PA in determining whether there are integrity issues which would prevent award of the contract to the seller. The PA has adopted a policy set forth in full on PA 3764A, that it will honor a determination by an agency of the State of New York or New Jersey that a bidder is not eligible to bid on or be awarded public contracts because the bidder has been determined to have engaged in illegal or dishonest conduct or to have violated prevailing wage legislation. The Terms and Conditions of PA 3764A apply to this order. A copy can be obtained by calling (201) 395-3405 or at http://www.panynj.gov/business-opportunities/become-vendor.html
12. The vendor may subcontract the services or use a supplier for the furnishing of materials required hereunder to such persons or entities as the Manager, Purchasing Services may from time to time expressly approve in writing. All further subcontracting shall also be subject to such approval.
13. The successful bidder (vendor) shall not issue nor permit to be issued any press release, advertisement, or literature of any kind, which refers to the Port Authority or that goods will be, are being or have been provided to it and/or that services will be, are being or have been performed for it in connection with this Agreement, unless the vendor first obtains the written approval of the Port Authority. Such approval may be withheld if for any reason the Port Authority believes that the publication of such information would be harmful to the public interest or is in any way undesirable.
14.Neither the Commissioners of the Port Authority, nor Directors of PATH, nor any of them, nor any officer, agent or employee thereof, shall be charged personally by the Contractor with any liability, or held personally liable to the Contractor under any term or provision of this Agreement, or because of its execution or attempted execution, or because of any breach, or attempted or alleged breach, thereof.

61506-03534

PY-80590

GENERAL NOTES	
NOTES	CONTENTS
1	FLATNESS OF 34.43/100= 0.345" [0.783mm]

LIST OF MATERIALS

QTY	ITEM	REMARK	PYRAMID PART NUMBER	DESCRIPTION	MATERIAL / SPECIFICATION	WEIGHT
1	1		PY-80590 P/N 61506-03534	GLAZING	GREY POLYCARBONATE 0.48" THICKNESS + VANDAL SHIELD INSIDE	12.8 Lbs.

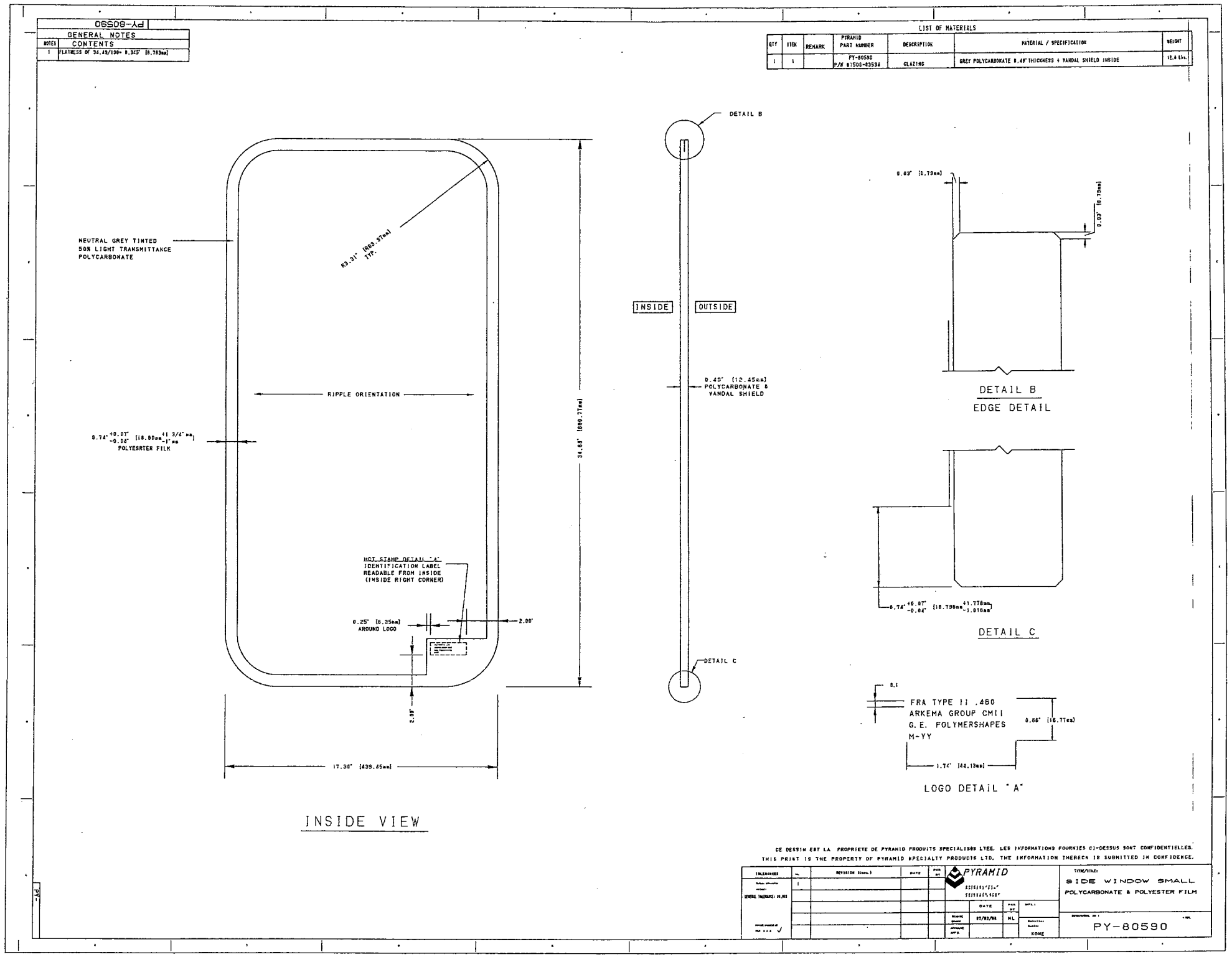

CE DESSIN EST LA PROPRIETE DE PYRAMID PRODUITS SPECIALISES LTEE. LES INFORMATIONS FOURNIES CI-DESSUS SONT CONFIDENTIELLES.
THIS PRINT IS THE PROPERTY OF PYRAMID SPECIALTY PRODUCTS LTD. THE INFORMATION THEREON IS SUBMITTED IN CONFIDENCE.

TOLERANCES	No.	REVISION (Eng.)	DATE	PAR BY
Unless otherwise stated GENERAL TOLERANCE: ±0.010	1			

PYRAMID
SCALE: 1"=1.0" SCALE: 0.020"

	DATE	PAR BY	APPL.
DRAWN	97/02/04	ML	
CHECKED			
APPROVED			KONE

TITLE: SIDE WINDOW SMALL
POLYCARBONATE & POLYESTER FILM

DRAWING NO.: PY-80590

KAWASAKI RAIL CAR INC.
APR 27 2006

APPLICABLE CAR	SET/CAR	WT/CAR	EFFECTIVITY
A			
C	2	24.0	ALL CARS

Subject to the Authority's rights and Allowable Uses granted per Article 105 of the PATH New Railcar Procurement Contract (Number 4600805759), KAWASAKI RAIL CAR, INC. reserves all rights in and to any patents, trademarks, trade secrets and other intel

UNLESS OTHERWISE SPECIFIED TOLERANCE OF DIMENSIONS	
0.02"-0.12" (0.5- 3)	±0.01" (0.2)
0.12"-0.24" (3- 6)	±0.01" (0.3)
0.24"-1.20" (6- 30)	±0.02" (0.5)
1.20"-4.72" (30- 120)	±0.03" (0.8)
4.72"-12.5" (120- 315)	±0.05" (1.2)
12.5"-40.0" (315-1000)	±0.08" (2.0)
40.0"-80.0" (1000-2000)	±0.12" (3.0)
OVER 80.0" (2000-)	±0.25" (6.0)
ANGLES	±1°

DRILLED HOLE DIA.	TOLERANCES
0.12"-0.24" (3- 6)	+0.005" (0.13) -0
0.24"-0.47" (6-12)	+0.010" (0.25) -0
0.47"-0.98" (12-25)	+0.012" (0.30) -0
0.98"-1.97" (25-50)	+0.016" (0.40) -0

CLASSIFICATION 形状区分	
1	
2	
3	
4	
5	

SCALE 縮尺	NTS
MATERIAL 材質	
WEIGHT (LBS) 重量(kg)	
SURFACE TREATMENT 表面処理	PAINT 塗装 Yes No

REV. 改訂記号	ECO. NO. 活動課 NO.	DESCRIPTION 改訂内容	DATE 改訂日付	DRAWN 担当	CHECKED 審査	APP'D 承認
		REVISIONS 改訂				

2006-4-14
承認 APPROVED K. Sakahara
審査 CHECKED
作成 DRAWN T. Kawahara

川崎重工 車両カンパニー KOBE JAPAN
KAWASAKI HEAVY INDUSTRIES, LTD.
BUILDING SYSTEM & CONSTRUCTION MACHINERY COMPANY

名称 TITLE: WINDOW PANE-SIDE
側窓ガラス

元図番 ORIG. DRG. NO. | 他図図番 DRG. NO.

図番 DRG. NO. 61506-03534

図面番号 DRAWING NO.	枚数 SHEET
1	1

品質保証 PRODUCTION ENGINEERING	
監査 APPROVED	審査 CHECKED

作成 DRAWN

ASSY WEIGHT : 12.00 LBS
Solid MX

PROJECT	SYS. CODE	SER. NO.	REVISION
PA-5	431	124	-

61506-03534

PY-80590

GENERAL NOTES	
NOTES	CONTENTS
1	FLATNESS OF 34.48/100= 0.345" (8.763mm)

LIST OF MATERIALS						
QTY	ITEM	REMARK	PYRAMID PART NUMBER	DESCRIPTION	MATERIAL / SPECIFICATION	WEIGHT
1	1		PY-80590 P/N 61506-03534	GLAZING	GREY POLYCARBONATE 0.40" THICKNESS + VANDAL SHIELD INSIDE	12.8 LBS.

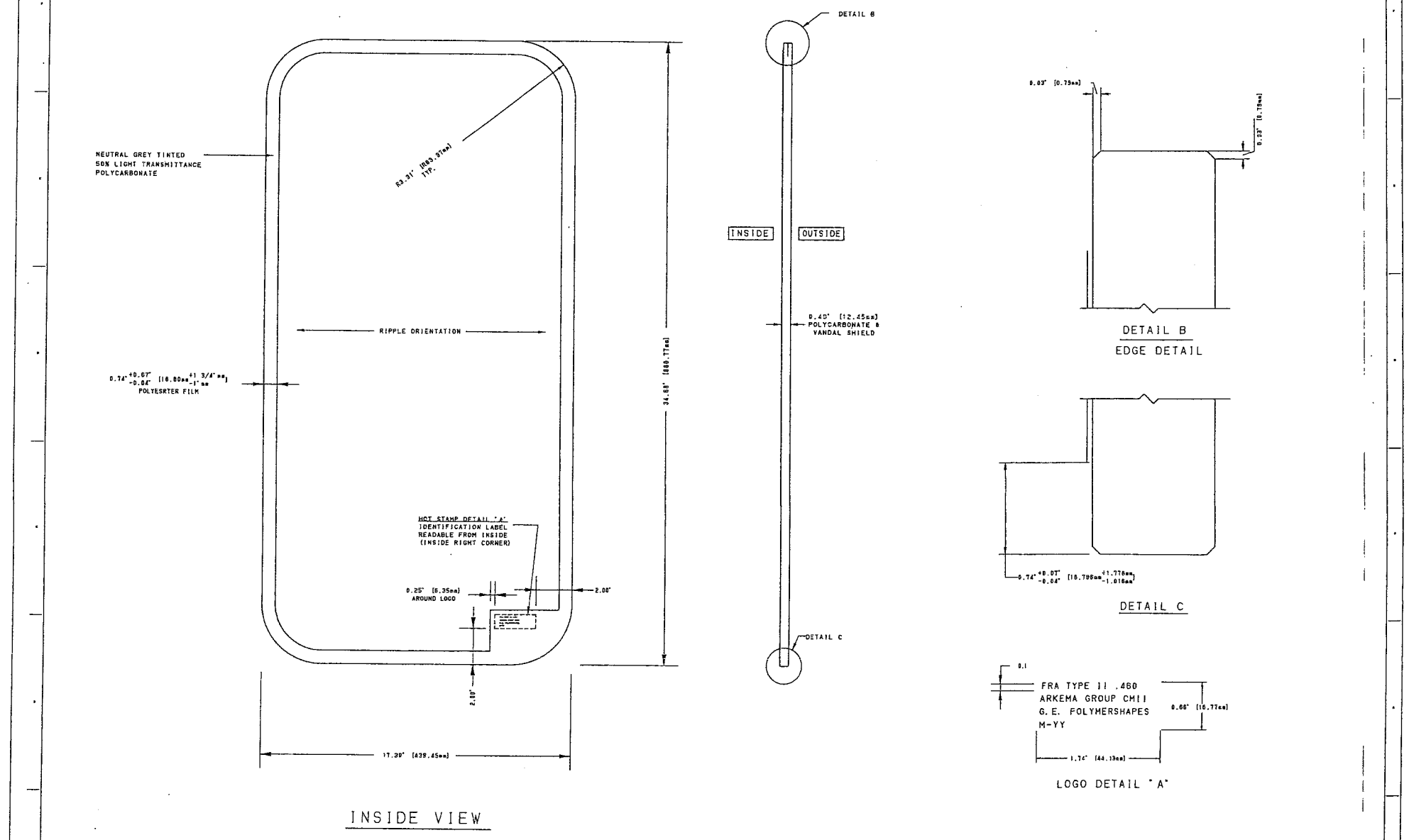

CE DESSIN EST LA PROPRIETE DE PYRAMID PRODUITS SPECIALISES LTEE. LES INFORMATIONS FOURNIES CI-DESSUS SONT CONFIDENTIELLES.
THIS PRINT IS THE PROPERTY OF PYRAMID SPECIALTY PRODUCTS LTD. THE INFORMATION THEREON IS SUBMITTED IN CONFIDENCE.

PYRAMID

TOLERANCES	NO.	REVISION (Eng.)	DATE	PAR BY	APP BY
GENERAL TOLERANCE: ±0.010	1		27/02/06	ML	

SCALE: NONE

TITLE: SIDE WINDOW SMALL
POLYCARBONATE & POLYESTER FILM

DRAWING NO.: PY-80590

APPLICABLE CAR	SET/CAR	WT/CAR	EFFECTIVITY
A			
C	2	24.0	ALL CARS

Subject to the Authority's rights and Allowable Uses granted per Article 105 of the PATH New Railcar Procurement Contract (Number 4600005775), KAWASAKI RAIL CAR, INC. reserves all rights in and to our patents, trademarks, trade secrets and other inter

UNLESS OTHERWISE SPECIFIED TOLERANCE OF DIMENSIONS	
0.02"-0.12" (0.5- 3)	±0.01" (0.2)
0.12"-0.24" (3- 6)	±0.01" (0.3)
0.24"-1.20" (6- 30)	±0.02" (0.5)
1.20"-4.70" (30- 120)	±0.03" (0.8)
4.70"-12.5" (120- 315)	±0.05" (1.2)
12.5"-40.0" (315-1000)	±0.08" (2.0)
40.0"-80.0" (1000-2000)	±0.12" (3.0)
OVER 80.0" (2000-)	±0.25" (6.0)
ANGLES	±1°
DRILLED HOLE DIA. TOLERANCES	
0.12"-0.24" (3- 6)	+0.005" (0.13) -0
0.24"-0.47" (6-12)	+0.010" (0.25) -0
0.47"-0.98" (12-25)	+0.015" (0.38) -0
0.98"-1.97" (25-50)	+0.016" (0.40) -0

CLASSIFICATION 形状区分	
1	
2	
3	
4	
5	

SCALE 縮尺: NTS
MATERIAL 材質
WEIGHT (LBS) 重量(kg)
SURFACE TREATMENT 表面処理
PAINT 塗装: Yes No

REV. 改定記号	ECO. NO. 変更番号	DESCRIPTION 改訂内容	DATE 改訂日付	DRAWN 製図	CHECKED 審査	APP'D 承認
		REVISIONS 改訂				

2006-4-14
K. Sankaran
J. Smith
T. Kawashima

川崎重工 車両カンパニー KOBE, JAPAN
KAWASAKI HEAVY INDUSTRIES, LTD. ROLLING STOCK COMPANY MACHINERY COMPANY

TITLE: WINDOW PANE-SIDE
側窓ガラス

KHI DRG. NO.: 61506-03534
SHEET: 1/1

PRODUCTION ENGINEERING 生産技術 APPROVED 承認 CHECKED 審査 DRAWN 作図

ASSY WEIGHT : 12.80 LBS
Solid M3

PROJECT	SYS. CODE	SER. NO.	REVISION
PA-5	431	124	-

KAWASAKI APR 27 2006 RAIL CAR INC.

62204-03507(a)

PY-80597-B

GENERAL NOTES

NO.	CONTENTS
1	FLATNESS OF 31.18/300= 0.345" (8.763mm)

LIST OF MATERIALS

QTY	ITEM	REMARK	PYRAMID PART NUMBER	DESCRIPTION	MATERIAL / SPECIFICATION	WEIGHT
1	1		PY-80597 P/N 02204-03507	GLAZING	CLEAR POLYCARBONATE 6 46" THK. WITH 85% VLT	12.7 Lbs.
1	2		PY-51452 P/N 33031-03511	VANDAL FILM	MADICO CLEAR VANDAL SHIELD LCL-600-BFSR. INSIDE	N/A

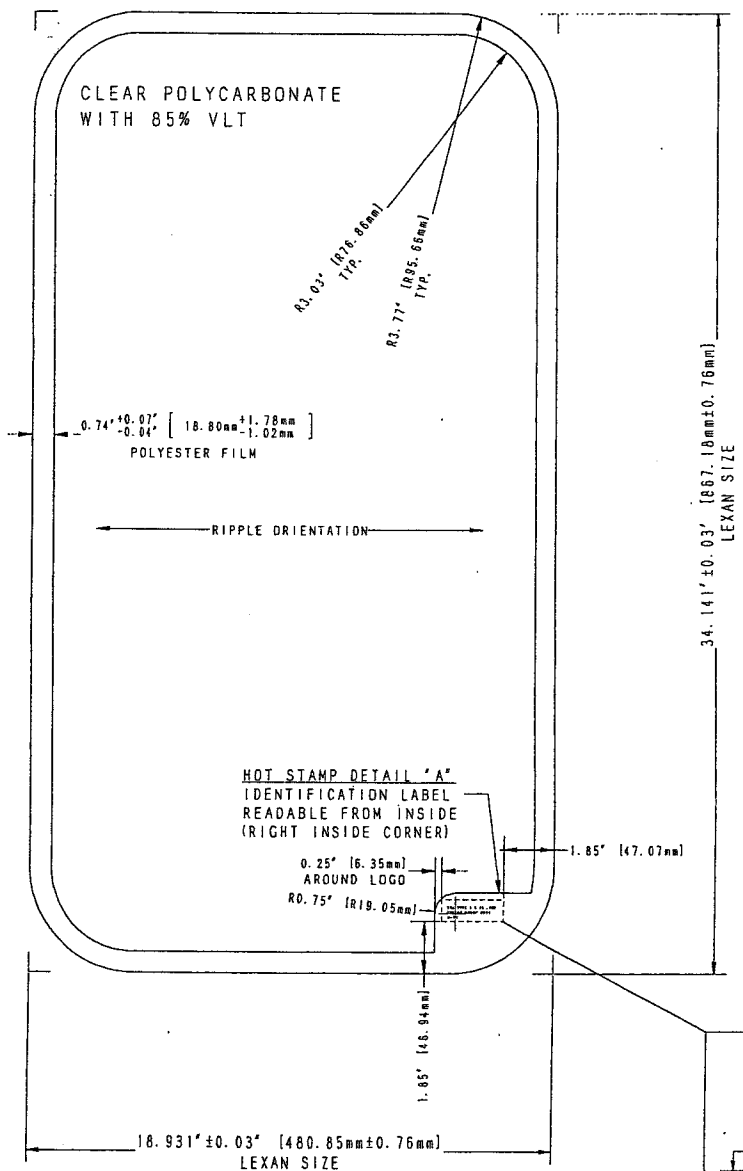

INSIDE VIEW

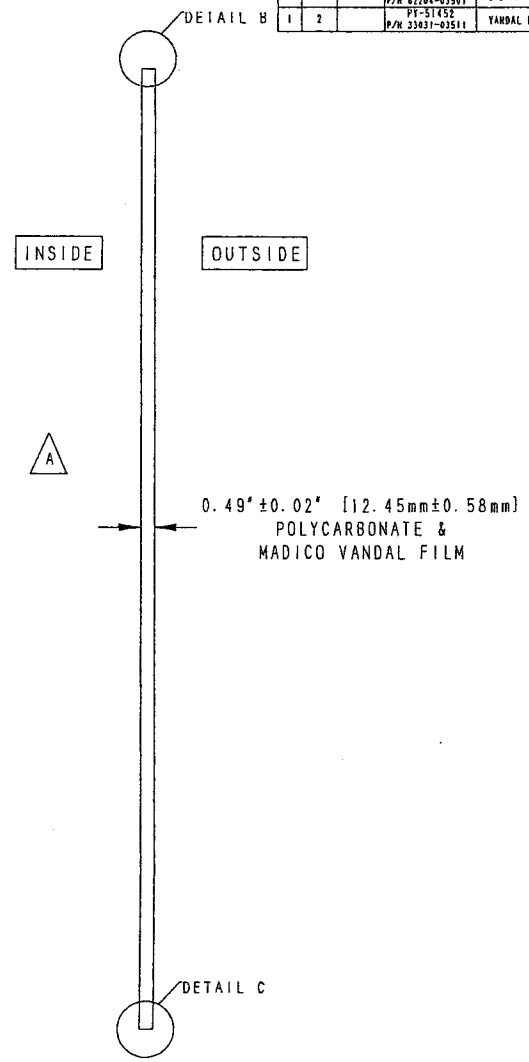

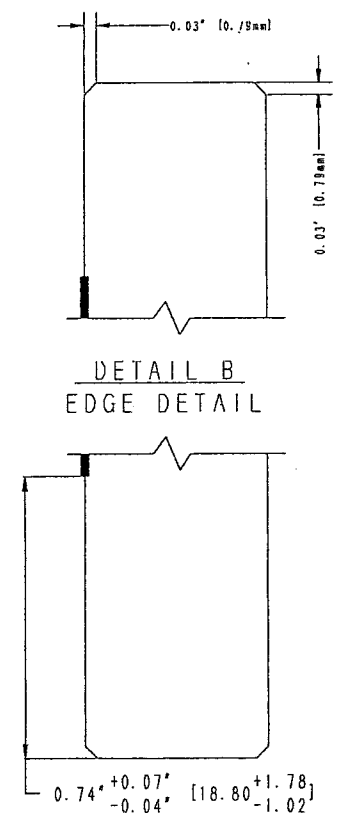

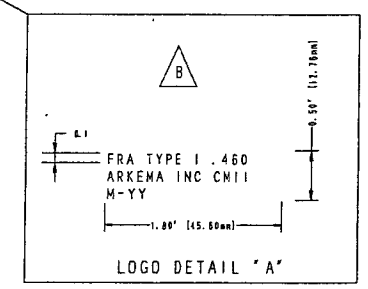

LOGO DETAIL "A"

TOIFRANCFS	NO.	REVISION (Comm.)	DATE	PAR BY
Unless otherwise noted!	A	PART # CHANGE TO ORIG. SPEC	12-01-03	N L
DIMENSIONS: INCHES/MM	B	HOT STAMP DESCRIPTION	14-03-07	N L
SURFACE ROUGHNESS AS PER A S A				

NASG NORTH AMERICAN SPECIALTY GLASS

	DATE	PAR BY
DESIGNED DRAWN	01/03/06	N L
APPROVED APP'D.		

MAT'L: Consistent Design HONE

TITRE/TITLE: CAR END DOOR WINDOW
POLYCARBONATE & VANDAL SHIELD / PROJECT PATH

DESIGN/DWG. NO. PY-80597-B

APPLICABLE CAR	SET/CAR	WT/CAR	EFFECTIVITY
A	1	12.7	ALL CARS
C			

Subject to the Authority's rights and Allowable Uses granted per Article 105 of the PATH New Railcar Procurement Contract (Number 1630095770). KAWASAKI RAIL CAR, INC. reserves all rights in and to any patents, trademarks, trade secrets and other intel

UNLESS OTHERWISE SPECIFIED
TOLERANCE OF DIMENSIONS
0.00"~0.12" (0.0~ 3) ±0.01" (0.2)
0.12"~0.24" (3~ 6) ±0.01" (0.3)
0.24"~1.20" (6~ 30) ±0.02" (0.5)
1.20"~4.00" (30~ 125) ±0.03" (0.8)
4.00"~12.0" (125~ 315) ±0.05" (1.3)
12.0"~40.0" (315~ 1000) ±0.02" (2.0)
40.0"~80.0" (1000~2000) ±0.12" (3.0)
OVER 80.0" (2000~) ±0.25" (6.0)
ANGLES ±1°
DRILLING HOLE DIA. TOLERANCES
0.12"~0.24" (3~ 6) +0.005" (0.15), -0
0.24"~0.47" (6~ 12) +0.010" (0.25), -0
0.47"~0.98" (12~ 25) +0.012" (0.30), -0
0.98"~1.97" (25~ 50) +0.016" (0.40), -0

CLASSIFICATION 形状区分	
1	
2	
3	
4	
5	

SCALE 縮尺	NTS
MATERIAL 材質	
WEIGHT (LBS) 重量(kg)	12.70 5.77
SURFACE TREATMENT 表面処理	PAINT 塗装 Yes (No)

REV. 改訂記号	ECO. NO. 変更案 NO.	DESCRIPTION 改訂内容	DATE 改訂日付	DRAWN 担当	CHECKED 審査	APP'D 決定
a	07RC0716	CHANGED GLAZING MATERIAL CHANGED TOTAL WEIGHT.	07.06.02	J.K	T.G	T.S

REVISIONS 改訂

2006-04-25
承認 APPROVED K. Inukai
審査 CHECKED T. Sato
作成 DRAWN J. Kawashima

川崎重工 車両カンパニー KOBE-JAPAN
KAWASAKI HEAVY INDUSTRIES, LTD.
RULLING STOCK & CONSTRUCTION SALES&SERV. CENTRAL

SUBTITLE
WINDOW PANE-END SLIDING DOOR
妻引戸窓ガラス

品目番 ORIG. DRG. NO. | 図面番 DRG. NO.

図番 DRG. NO. 62204-03507(a)
総枚数-SHEET 1/1

生産技術 PRODUCTION ENGINEERING
承認 APPROVED | 審査 CHECKED | 作成 DRAWN

ASSY WEIGHT 12.70 LBS Solid XT

PROJECT	SYS. CODE	SER. NO.	REVISION
PA-5	431	162	a

62204-03507a

PY-80597-B

GENERAL NOTES	
NOTES	CONTENTS
1	TOLERANCE OF 3L.1W/3W= A 3W" (L.145mm)

LIST OF MATERIALS

QTY	ITEM	REMARK	PYRAMID PART NUMBER	DESCRIPTION	MATERIAL / SPECIFICATION	WEIGHT
1	1		PY-80597 P/N 61384-03567	GLAZING	CLEAR POLYCARBONATE 0.45" THK WITH 85% VLT	12.7 Lbs.
1	2		PY-51453 P/N 33031-03511	VANDAL FILM	MADICO CLEAR VANDAL SHIELD LCL-500-BFSSR. INSIDE	N/A

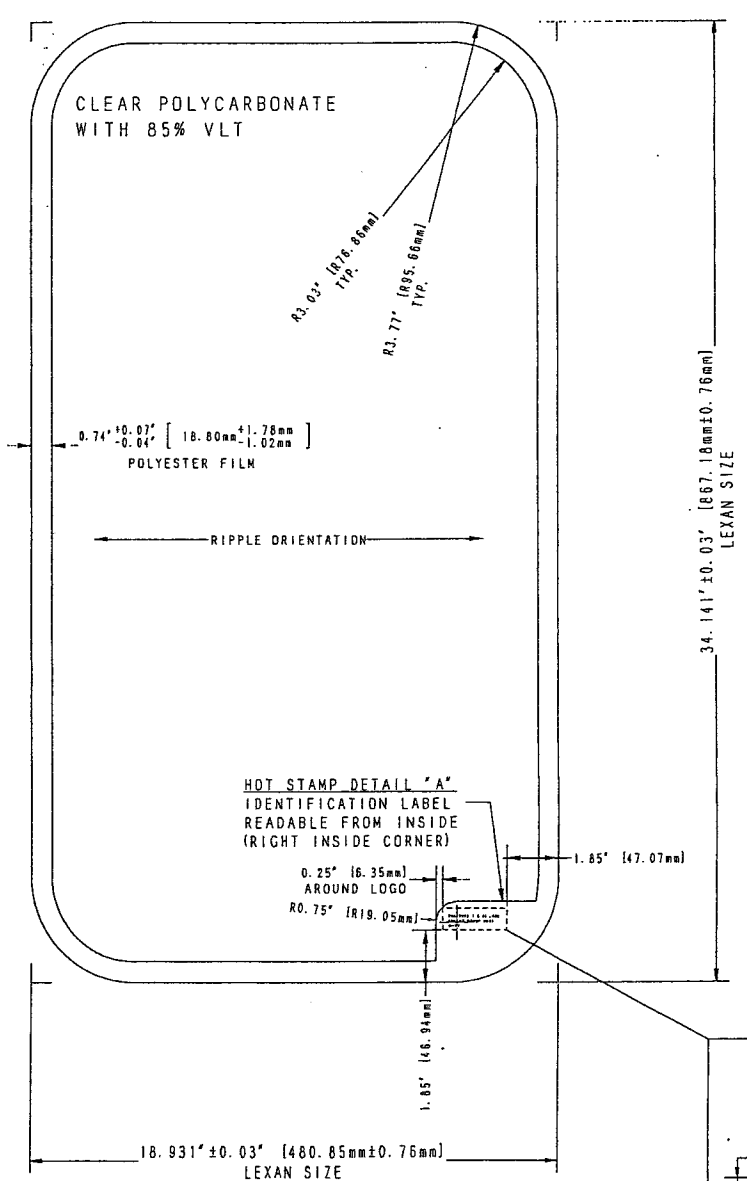

INSIDE VIEW

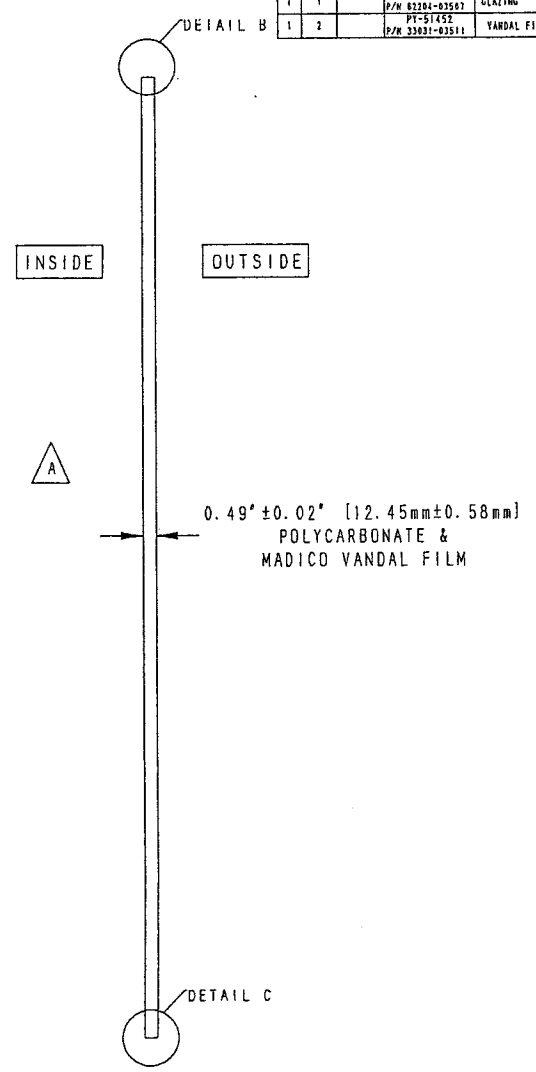

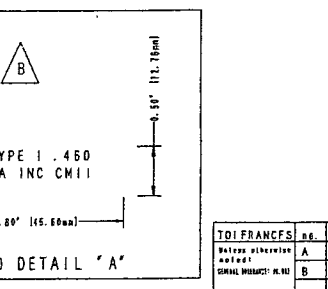

LOGO DETAIL "A"

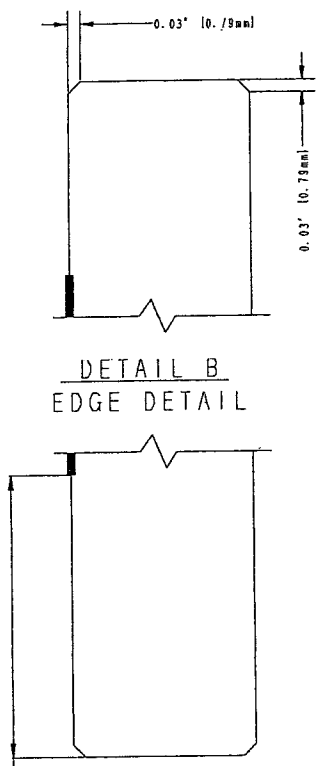

DETAIL B
EDGE DETAIL

DETAIL C

TOLERANCES	NO.	REVISION (Comm.)	DATE	PAR BY	NASG NORTH AMERICAN SPECIALTY GLASS	TITRE/TITLE: CAR END DOOR WINDOW POLYCARBONATE & VANDAL SHIELD / PROJECT PATH
Unless otherwise noted! SIGNAL INCIDENCE: 16.162	A	PART # CHANGE TO ORIG. SPEC	12-02-17	N.L.		
	B	HOT STAMP DESCRIPTION	14-03-07	N.L.		
SURFACE ROUGHNESS AS PER A.S.A.V					DESIGNED DRAWN 01/03/06 N.L. APPROVED APP'D	Supplier Dealer NONE
						DESIGN/DRG. NO PY-80597-B

APPLICABLE CAR	SET/CAR	WT/CAR	EFFECTIVITY
A	1	12.7	ALL CARS
C			

Subject to the Authority's rights and Allowable Uses granted per Article 105 of the PATH New Railcar Procurement Contract (Number 4600005779), KAWASAKI RAIL CAR, INC. reserves all rights in and to our patents, trademarks, trade secrets and other intel

UNLESS OTHERWISE SPECIFIED	
TOLERANCE OF DIMENSIONS	
0.02"~0.12" (0.5~ 3)	±0.01" (±0.3)
0.12"~0.24" (3~ 6)	±0.02" (±0.5)
0.24"~1.20" (6~ 30)	±0.03" (±0.8)
1.20"~4.70" (30~ 120)	±0.03" (±0.8)
4.70"~12.5" (120~ 315)	±0.05" (±1.2)
12.5"~40.0" (315~ 1000)	±0.06" (±2.0)
40.0"~80.0" (1000~ 2000)	±0.12" (±3.0)
OVER 80.0" (2000~)	±0.25" (±6.0)
ANGLES	±1°
DRILLING HOLE DIA.	TOLERANCES
0.12"~0.24" (3~ 6)	+0.006" (+0.152) -0
0.24"~0.47" (6~ 12)	+0.010" (+0.254) -0
0.47"~0.98" (12~ 25)	+0.012" (+0.305) -0
0.98"~1.97" (25~ 50)	+0.016" (+0.406) -0

CLASSIFICATION 形状区分	
1	
2	
3	
4	
5	

SCALE 縮尺	NTS
MATERIAL 材質	
WEIGHT (LBS) 重量(kg)	12.70 5.77
SURFACE TREATMENT 表面処理	PAINT 塗装 Yes

REV. 改訂番号	ECO. NO. 変更案 NO.	DESCRIPTION 改訂内容	DATE 改訂日付	DRAWN 担当	CHECKER 審査	APP'D 承認
a	07RC0716	CHANGED GLAZING MATERIAL CHANGED TOTAL WEIGHT.	07.05.02	JK	TG	TI

REVISIONS 改訂

2006-04-25
RE APPROVED K. Inshima
製図 CHECKED
作成 DRAWN H. Kawashima

川崎重工 KOBE JAPAN
KAWASAKI HEAVY INDUSTRIES, LTD.
ROLLING STOCK & CONSTRUCTION SAITMOT CENTER

TITLE
WINDOW PANE-END SLIDING DOOR
妻引戸窓ガラス

図番 ORIG. DRG. NO. 前図番 ORIG. NO.

図番 DRG. NO. 62204-03507a
SHEET 1/1

PROJECT	SYS. CODE	SER. NO.	REVISION
PA-5	431	162	a

ASSY WEIGHT 12.70 LBS Solid X3

生産技術 PRODUCTION ENGINEERING 承認 APPROVED 審査 CHECKED 作成 DRAWN

61511-03509C

LIST OF MATERIALS

QTY	ITEM	REMARK	PYKAMID PART NUMBER	DESCRIPTION	MATERIAL / SPECIFICATION	WEIGHT
1	1		PY-80603 P/N 61511-03509	GLAZING	CLEAR LAMINATED GLASS 0.375" THK + TINTED FILM 15% VLT	17.0 Lbs.
1	2		PY-51256 P/N 33032 02502	TINTED FILM	3M "SCOTCHTINT" FILM	N/A

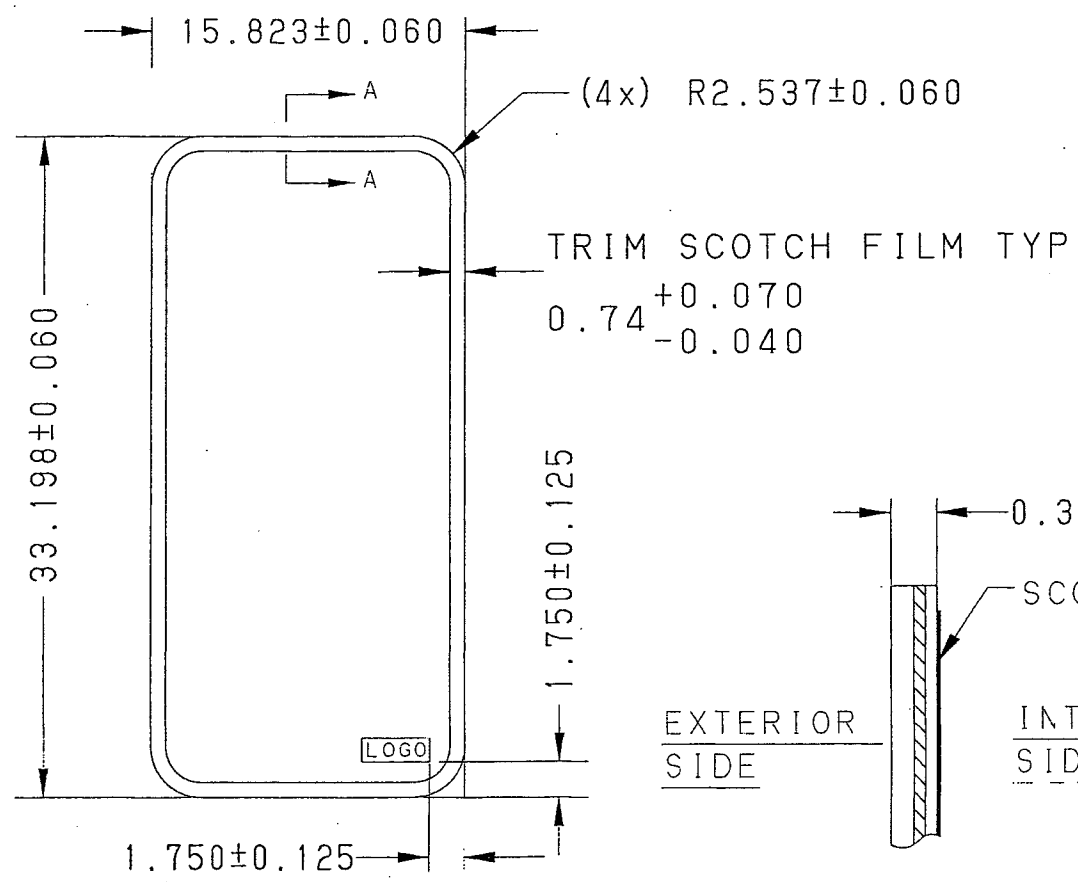

INTERIOR VIEW

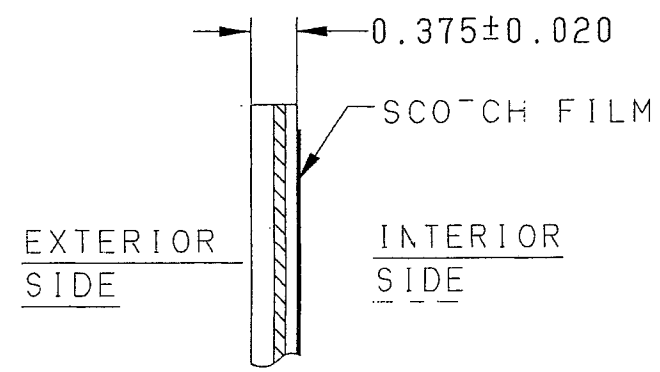

SECTION A-A
NO SCALE

NOTES:

1. CLEAR LAMINATED SAFETY GLASS WITH 3M TINTED SCOTCH FILM P/N: RE20NEARL.
2. ALL EDGES TO BE CONDITIONED FOR SAFE HANDLING.
3. FLATNESS SHALL BE LESS THAN 0.030 INCH PER LINEAR FOOT.
4. OVERLAP SHALL NOT EXCEED 1/32 INCH.
5. APPLY SCOTCH FILM ON INTERIOR SIDE.
6. APPROX. WEIGHT: 17 LBS
7. △ VISIBLE LIGHT TRANSMISSION: 15% ±4%

NASG
NORTH AMERICAN SPECIALTY GLASS
FRA Type II
AS 1 DOT 103 SMP-09Q
Year.....
This Side In

LOGO DETAIL
SCALE: NONE
READABLE TO INTERIOR

REVISION NUMBER	DESCRIPTION	DATE	DRAWN BY
1	REVISED PER LETTER No. PATH-KRC-80194	8/2/06	P. X.

DRAWN BY: P. X.
CHECKED BY:
APPROVED BY:
DATE: 4/12/06
SCALE: NONE

TOLERANCES:
1 PLC DECIMALS 0.06
2 PLC DECIMALS 0.05
ANGLES ±
FRACTIONS ±
DIMENSIONS ARE IN INCH.
DO NOT SCALE DRAWING

NASG
NORTH AMERICAN SPECIALTY GLASS
2175 KUHRY ROAD P.O. BOX 70
TRUMBAUERSVILLE, PENNA. 18970-0070
PHONE: (215) 536-0333 FAX: (215) 536-2025

TITLE: KAWASAKI CAB SIDE SLIDER GLASS

DRAWING NUMBER (SHOWN): PY-80603
DRAWING NUMBER (OPP. HAND):

CUSTOMER DWG. 61511-03509 REV

NOTICE

APPLICABLE CAR	SET/CAR	KIT/CAR	EFFECTIVITY
A	△ 1	17.0	ALL CARS
C	△		

Subject to the Authority's rights and Allowable Uses granted per Article 125 of the PATH New Railcar Procurement Contract (Number A08C805T78), KAWASAKI RAIL CAR, INC. reserves all rights in and to any patents, trademarks, trade secrets and other intellectual property and proprietary information contained in this drawing, which are the property of KAWASAKI RAIL CAR, INC. or its licensees.

UNLESS OTHERWISE SPECIFIED
TOLERANCE OF DIMENSIONS

0.02"~0.12" (0.5~3)	±0.01" (±0.3)		
0.12"~0.24" (3~6)	±0.01" (±0.3)		
0.24"~1.20" (6~30)	±0.02" (±0.5)		
1.20"~4.70" (30~120)	±0.03" (±0.8)		
4.70"~12.5" (120~315)	±0.05" (±1.3)		
12.5"~40.0" (315~1000)	±0.08" (±2.0)		
40.0"~80.0" (1000~2000)	±0.12" (±3.0)		
OVER 80.0" (2000~)	±0.25" (±6.0)		

ANGLES ±1°

DRILLED HOLE DIA. TOLERANCES

0.12"~0.24" (3~6)	+0.008" (+0.25), -0
0.24"~0.47" (6~12)	+0.015" (+0.25), -0
0.47"~0.98" (12~25)	+0.018" (+0.30), -0
0.98"~1.97" (25~50)	+0.018" (+0.40), -0

CLASSIFICATION 表示区分
1
2
3
4
5

SCALE 縮尺: NTS
MATERIAL 材質
WEIGHT (LBS) 重量 (kg)
SURFACE TREATMENT 表面処理
PAINT 塗装 Yes

REV. 改訂記号	ECO. NO. 変更通知 NO.	DESCRIPTION 改訂内容	DATE 改訂日付	DRAWN 作図	DESIGN 設計	APP'D 承認
c	10RC0600	CHANGED 0.37 TO EFFECTIVITY TABLE.	10.03.06	T. K	T. G	M. K
b	07RC0005	[illegible]	10.31.06	T. K	T. G	K. T
a	06RC1750	REVISED VENDOR DRAWING.	06.09.07	T. K	T. G	K. T

REVISIONS 改訂

2006.04.25
本図 APPROVED K. Tsukahara
本図 CHECKED T. Oto
本図 DRAWN T. Kawashima

川崎重工 本社カンパニー KOBE, JAPAN
KAWASAKI HEAVY INDUSTRIES, LTD.
ROLLING STOCK & CONSTRUCTION MACHINERY COMPANY

名称 TITLE: WINDOW PANE-CAB SIDE 運転室側窓ガラス

PYKA DRG. NO.
61511-03509 (c)
REVISION

PRODUCTION ENGINEERING 生産技術 本図 APPROVED 本図 CHECKED 本図 DRAWN

ASSY WEIGHT : 17.03 LBS Solid Kit

PA-5	451	132	c

61511-03509C

LIST OF MATERIALS

QTY	ITEM	REMARK	PYRAMID PART NUMBER	DESCRIPTION	MATERIAL / SPECIFICATION	WEIGHT
1	1		PY-80603 P/N 61511-03509	GLAZING	CLEAR LAMINATED GLASS 0.375" THK + TINTED FILM 15% VLT	17.0 LBS.
1	2		PY-51356 P/N 33032 02502	TINTED FILM	3M "SCOTCHTINT" FILM	N/A

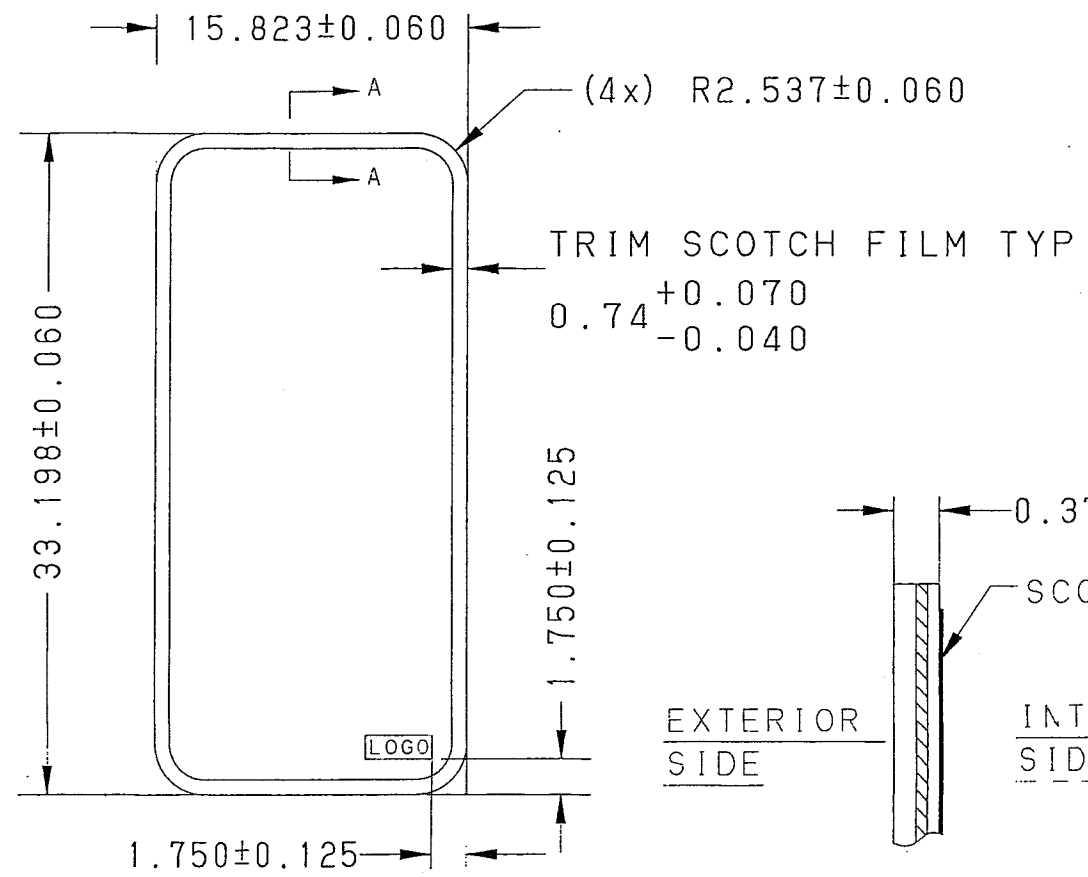

INTERIOR VIEW

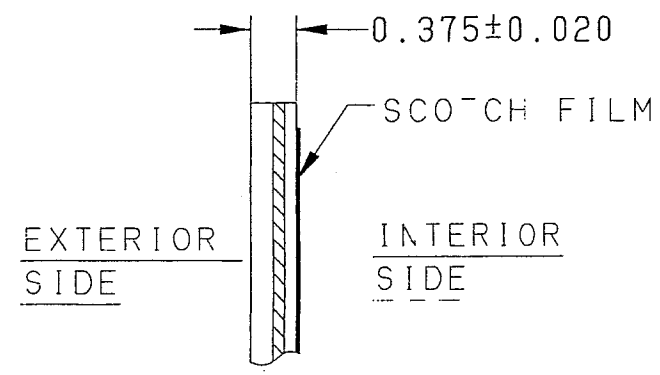

SECTION A-A
NO SCALE

NOTES:

1. CLEAR LAMINATED SAFETY GLASS WITH 3M TINTED SCOTCH FILM P/N: RE20NEARL.
2. ALL EDGES TO BE CONDITIONED FOR SAFE HANDLING.
3. FLATNESS SHALL BE LESS THAN 0.030 INCH PER LINEAR FOOT.
4. OVERLAP SHALL NOT EXCEED 1/32 INCH.
5. APPLY SCOTCH FILM ON INTERIOR SIDE.
6. APPROX. WEIGHT: 17 LBS
7. VISIBLE LIGHT TRANSMISSION: 15% ±4%

NASG
NORTH AMERICAN SPECIALTY GLASS
FRA Type II
AS 1 DOT 103 SMP-09Q
Year.....
This Side In

LOGO DETAIL
SCALE: NONE
READABLE TO INTERIOR

REVISION NUMBER	DESCRIPTION	DATE	DRAWN BY
1	REVISED PER LETTER No. PATH-KRC-80194	8/2/06	P. X.

DRAWN BY: P. X.
CHECKED BY:
APPROVED BY:
TOLERANCES: 1 PLC DECIMALS 0.06; 2 PLC DECIMALS 0.06; ANGLES ±; FRACTIONS ±
DIMENSIONS ARE IN INCH. DO NOT SCALE DRAWING

NASG
NORTH AMERICAN SPECIALTY GLASS
2175 KUMRY ROAD P.O. BOX 70
TRUMBAUERSVILLE, PENNA. 18970-0070
PHONE: (215) 536-0333 FAX: (215) 536-2025

DATE: 4/12/06
SCALE: NONE
TITLE: KAWASAKI CAB SIDE SLIDER GLASS
DRAWING NUMBER (SHOWN): PY-80603
DRAWING NUMBER (OPP. HAND):

CUSTOMER DWG. 61511-03509 REV

NOTICE

APPLICABLE CAR	SET/CAR	KT/CAR	EFFECTIVITY
A	1	IT.0	ALL CARS
C			

Subject to the Authority's rights and Allowable Uses granted per Article 125 of the PATH New Railcar Procurement Contract (Number A68C005778), KAWASAKI RAIL CAR, INC. reserves all rights in and to any patents, trademarks, trade secrets and other intellectual property and proprietary information contained in this drawing, which are the property of KAWASAKI RAIL CAR, INC. or its licensees.

UNLESS OTHERWISE SPECIFIED
TOLERANCE OF DIMENSIONS

0.02"-0.12" (0.5- 3)	±0.01" (0.3)
0.12"-0.24" (3- 6)	±0.01" (0.3)
0.24"-1.20" (6- 30)	±0.02" (0.5)
1.20"-4.70" (30- 120)	±0.03" (0.8)
4.70"-12.5" (120- 315)	±0.05" (1.3)
12.5"-40.0" (315-1000)	±0.08" (2.0)
40.0"-80.0" (1000-2000)	±0.12" (3.0)
OVER 80.0" (2000-)	±0.25" (6.0)

ANGLES ±1°

DRILLED HOLE DIA. TOLERANCES

0.12"-0.24" (3- 6)	+0.006" (0.15), -0
0.24" 0.47" (6-12)	+0.010" (0.25), -0
0.47"-0.98" (12-25)	+0.012" (0.30), -0
0.98"-1.97" (25-50)	+0.018" (0.46), -0

CLASSIFICATION 等級区分	
1	
2	
3	
4	
5	

SCALE 縮尺: NTS
MATERIAL 材質
WEIGHT (LBS) 重量(kg)
SURFACE TREATMENT 表面処理: PAINT 塗装 Yes

REV. 改訂記号	ECO. NO. 設変番号	DESCRIPTION 改訂内容	DATE 改訂日付	DRAWN 製図	DESIGN 設計	APP'D 承認
c	10RC0600	CORRECTED VT IN EFFECTIVITY TABLE	10.03.06	T.G		M.K
b	0RC0005	REVISED VENDOR DRAWING	10.31.06	T.K	T.G	K.T
a	06RC1750	REVISED VENDOR DRAWING	06.05.07	T.K	T.G	K.T

REVISIONS 改訂

2006.04.25
承認 APPROVED K. Inohara
承認 CHECKED T. Ito
作成 DRAWN T. Kawashima

川崎重工 車両カンパニー KOBE, JAPAN
KAWASAKI HEAVY INDUSTRIES, LTD.
ROLLING STOCK & CONSTRUCTION MACHINERY COMPANY

名称 TITLE: WINDOW PANE-CAB SIDE 運転室側窓ガラス

P.S.B. DRG. NO. | 相当品 DRG. NO.

図番 DRG. NO. 61511-03509 C
REVISION

PRODUCTION ENGINEERING 承認 APPROVED | 承認 CHECKED | 作成 DRAWN

ASSY WEIGHT : 17.03 LBS Solid M2

PA-5	451	132	c

61511-03508c

LIST OF MATERIALS

QTY	ITEM	REMARK	PYRAMID PART NUMBER	DESCRIPTION	MATERIAL / SPECIFICATION	WEIGHT
1	1		PY-80598 F/W 61511-03508	GLAZING	CLEAR LAMINATED GLASS 0.375" THK. 86% VLT	17.0 LBS.
1	2		PY-51255 F/W 33821-03514	VANDAL FILM	MADICO CLEAR VANDAL SHIELD LCL-500-BFXSR, INSIDE	N/A

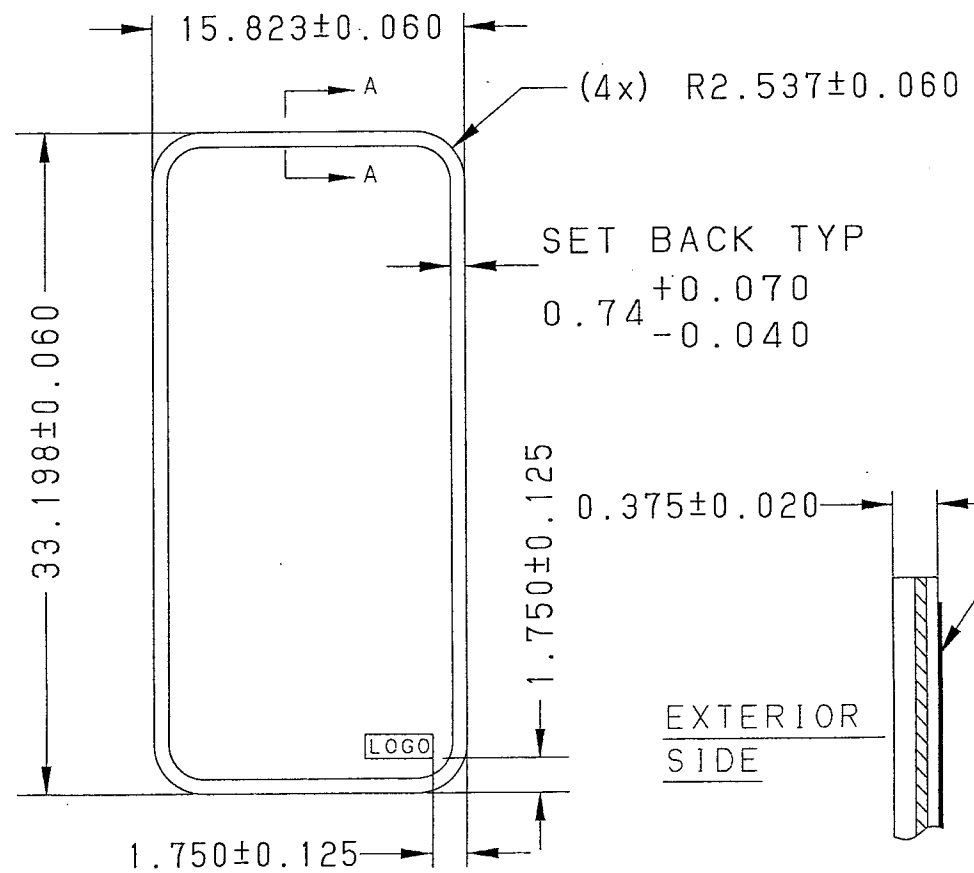

INTERIOR VIEW

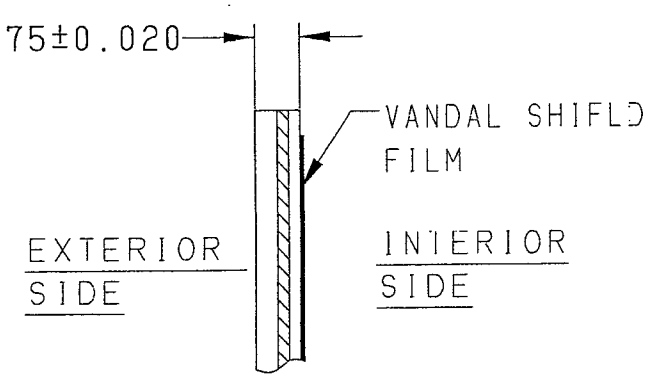

SECTION A-A
NO SCALE

NOTES:

1. CLEAR LAMINATED SAFETY GLASS.
2. ALL EDGES TO BE CONDITIONED FOR SAFE HANDLING.
3. FLATNESS SHALL BE LESS THAN 0.030 INCH PER LINEAR FOOT.
4. OVERLAP SHALL NOT EXCEED 1/32 INCH.
5. APPLY VANDAL SHIELD FILM ON INTERIOR SIDE.
6. APPROX. WEIGHT: 17 LBS
7. VISIBLE LIGHT TRANSMISSION: 86% ±4%

NASG
NORTH AMERICAN SPECIALTY GLASS
FRA Type II
AS 1 DOT 103 SMP-09K
Year.....
This Side In.

LOGO DETAIL
SCALE: NONE
READABLE TO INTERIOR

REVISION NUMBER	DESCRIPTION	DATE	DRAWN BY
1	REVISED PER LETTER No. PATH-KRC-80194	8/2/06	P. X.

DRAWN BY: P. X.
CHECKED BY:
APPROVED BY:
DATE: 4/12/06
SCALE: NONE

TOLERANCES:
1 PLC DECIMALS 1PLCTOL
2 PLC DECIMALS 2PLCTOL
ANGLES ±
FRACTIONS ±
DIMENSIONS ARE IN INCH.
DO NOT SCALE DRAWING

NASG
NORTH AMERICAN SPECIALTY GLASS
2175 KUHRY ROAD P.O. BOX 70
TRUMBAUERSVILLE, PENNA. 18970-0070
PHONE: (215) 536-0333 FAX: (215) 536-2025

TITLE: KAWASAKI CAB SIDE SLIDER GLASS

DRAWING NUMBER (SHOWN): PY-80598
DRAWING NUMBER (OPP. HAND):

CUSTOMER DWG. 61511-03508 REV

NOTICE

APPLICABLE CAR	SET/CAR	VT/CAR	EFFECTIVITY
A	2	34.0	ALL CARS
C	2	34.0	ALL CARS

Subject to the Authority's rights and Allowable Uses granted per Article 105 of the PATH New Rail Car Procurement Contract (Number 4800005TF), KAWASAKI RAIL CAR, INC. reserves all rights in and to any patents, trademarks, trade secrets and other intellectual property and proprietary information contained in this drawing, which are the property of KAWASAKI RAIL CAR, INC. or its licensees.

UNLESS OTHERWISE SPECIFIED
TOLERANCE OF DIMENSIONS
0.02"-3.12" (0.5- 3) ±0.01" (0.3)
0.12"-3.24" (3- 8) ±0.01" (0.3)
0.24"-1.20" (6- 30) ±0.02" (0.5)
1.20"-2.70" (30- 120) ±0.03" (0.8)
2.70"-12.5" (120- 315) ±0.05" (1.3)
12.5"-40.0" (315-1000) ±0.08" (2.0)
40.0"-80.0" (1000-2000) ±0.12" (3.0)
OVER 80.0" (2000-) ±0.25" (6.0)
ANGLES ±1°
DRILLED HOLE DIA. TOLERANCES
0.12"-0.24" (3- 6) +0.008" (0.15) -0
0.24"-0.47" (6-12) +0.01" (0.25) -0
0.47"-0.95" (12-25) +0.012" (0.30) -0
0.95"-1.97" (25-50) +0.016" (0.40) -0

CLASSIFICATION 形状区分	
1	
2	
3	
4	
5	

SCALE 縮尺: NTS
MATERIAL 材質
WEIGHT (LBS) 重量(kg)
SURFACE TREATMENT 表面処理
PAINT 塗装 Yes No

REV.	ECO. NO. 変更指令	DESCRIPTION 改訂内容	DATE 改訂日付	DRAWN 製図	CHECKED 審査	APP'D 承認
c	10RC0005	CHANGED B TO 1B APPLICATION TABLE.	10.01.08	T.Y	Y.Hil	K.Sakahara
b	08RC0731	CHANGE SEALANT TYPE	08.04.14	N. O	T. G	T.Ito
a	06RC1750	REVISED VENDOR DRAWING	06.09.07	T. K	T. G	K. T

REVISIONS 改訂

2006.06.25
承認 APPROVED K.Sakahara
承認 CHECKED T.Ito
作成 DRAWN T.Kawashima

川崎重工 本社カンパニー KOBE, JAPAN
KAWASAKI HEAVY INDUSTRIES, LTD.
RAILWAY SYSTEMS & CONSTRUCTION ARCHITECT COMPANY

タイトル TITLE: WINDOW PANE-CAB CONDUCTOR SIDE 運転室側窓ガラス

KHI-6 ORIG. DRG. NO.
KHI-2000 ORIG. NO.

図番 DWG. NO.: 61511-03508 (c)
REVISION: c
総枚数/SHEET: 1/1

生産技術 PRODUCTION ENGINEERING
承認 APPROVED | 承認 CHECKED | 作成 DRAWN

ASSY WEIGHT : 17.00 LBS Solid WD

PA-5	431	131	c

61511-03508(c)

1/8

PE

TS

NF

LIST OF MATERIALS

QTY	ITEM	REMARK	PYRAMID PART NUMBER	DESCRIPTION	MATERIAL / SPECIFICATION	WEIGHT
1	1		PY-80598 F/K 61511-03508	GLAZING	CLEAR LAMINATED GLASS 0.375" THK. 86% VLT	17.0 Lbs.
1	2		PY-51455 F/K 33021-03514	VANDAL FILM	MADICO CLEAR VANDAL SHIELD LCL-500-BFXSR, INSIDE	N/A

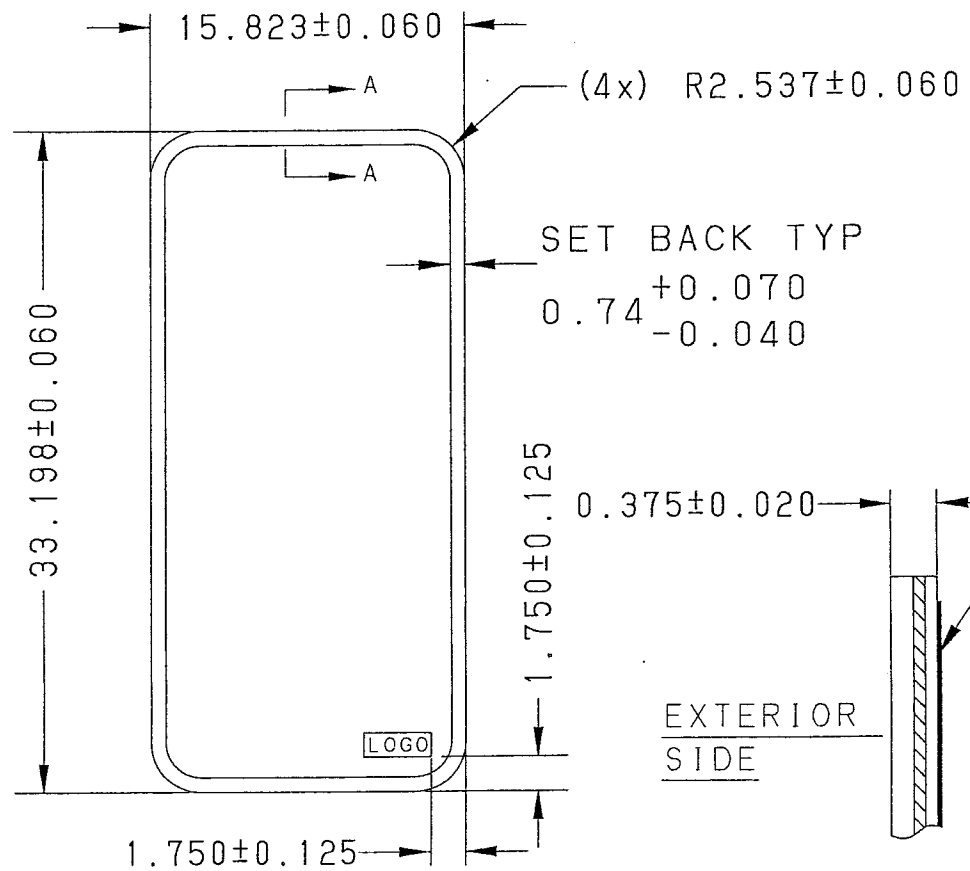

INTERIOR VIEW

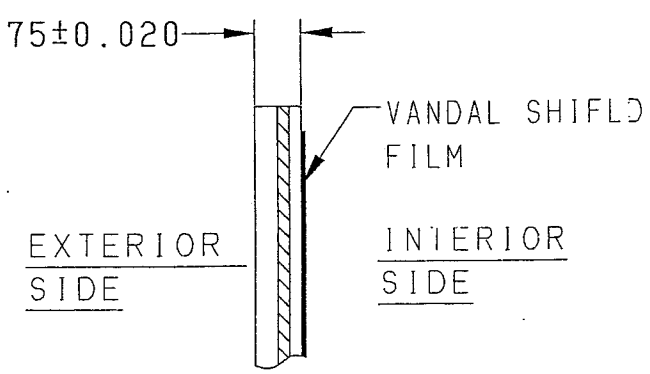

SECTION A-A
NO SCALE

NOTES:

1. CLEAR LAMINATED SAFETY GLASS.
2. ALL EDGES TO BE CONDITIONED FOR SAFE HANDLING.
3. FLATNESS SHALL BE LESS THAN 0.030 INCH PER LINEAR FOOT.
4. OVERLAP SHALL NOT EXCEED 1/32 INCH.
5. APPLY VANDAL SHIELD FILM ON INTERIOR SIDE.
6. APPROX. WEIGHT: 17 LBS
7. VISIBLE LIGHT TRANSMISSION: 86% ±4%

NASG
NORTH AMERICAN SPECIALTY GLASS
FRA Type II
AS 1 DOT 103 SMP-09K
Year.....
This Side In

LOGO DETAIL
SCALE: NONE
READABLE TO INTERIOR

REVISION NUMBER	DESCRIPTION	DATE	DRAWN BY
1	REVISED PER LETTER No. PATH-KRC-80194	8/2/06	P. X.

DRAWN BY: P. X.
CHECKED BY:
APPROVED BY:
DATE: 4/12/06
SCALE: NONE

TOLERANCES:
: PLC DECIMALS 1PLCTOL
2 PLC DECIMALS 2PLCTOL
ANGLES ±
FRACTIONS ±
DIMENSIONS ARE IN INCH.
DO NOT SCALE DRAWING

NASG
NORTH AMERICAN SPECIALTY GLASS
2175 KUHRY ROAD P. O. BOX 70
TRUMBAUERSVILLE, PENNA. 18970-0070
PHONE: (215) 536-0333 FAX: (215) 536-2025

TITLE: KAWASAKI CAB SIDE SLIDER GLASS

DRAWING NUMBER (SHOWN): PY-80598
DRAWING NUMBER (OPP. HAND):

CUSTOMER DWG. 61511-03508 REV

NOTICE

APPLICABLE CAR	SET/CAR	WT/CAR	EFFECTIVITY
A	2	34.8	ALL CARS
C	2	34.8	ALL CARS

Subject to the Authority's rights and Allowable Uses granted per Article 185 of the PATH New Six Year Procurement Contract (Number 68000857TS), KAWASAKI RAIL CAR, INC. reserves all rights in and to any patents, trademarks, trade secrets and other intellectual property and proprietary information contained in this drawing, which are the property of KAWASAKI RAIL CAR, INC or its licensees.

UNLESS OTHERWISE SPECIFIED
TOLERANCE OF DIMENSIONS

0.02"~3.12" (0.5~ 80)	±0.01" (0.3)	
3.12"~3.24" (80~ 82)	±0.01" (0.3)	
3.24"~11.20" (82~ 285)	±0.02" (0.5)	
11.20"~4.70" (285~ 120)	±0.03" (0.8)	
4.70"~12.6" (120~ 318)	±0.05" (1.3)	
12.6"~48.0" (318~1200)	±0.08" (2.0)	
48.0"~80.0" (1200~2000)	±0.12" (3.0)	
OVER 80.0" (2000~)	±0.25" (6.0)	

ANGLES ±1°

DRILLED HOLE DIA. TOLERANCES

0.12"~0.24" (3~ 6)	+0.006" (0.15) -0
0.24"~0.47" (6~12)	+0.010" (0.25) -0
0.47"~0.89" (12~23)	+0.012" (0.30) -0
0.89"~1.97" (23~50)	+0.016" (0.40) -0

CLASSIFICATION 形状区分	
1	
2	
3	
4	
5	

SCALE 縮尺: NTS
MATERIAL 材質
WEIGHT (LBS) 重量(kg)
SURFACE TREATMENT 表面処理
PAINT 塗装 Yes No

REV.	ECO. NO. 設変指示・承認書 No.	DESCRIPTION 改訂内容	DATE 改訂日付	DRAWN 担当	CHECKED 審査	APP'D 承認
c	13RC0005	CHANGED V.L.T. IN SPECIFICATION TABLE.	10.01.05	T.G.	T.G.	
b	08RC0731	CHANGED WEIGHT PER	08.04.14	N. O.	T. G.	T. U.
a	06RC1750	REVISED VENDOR DRAWING.	06.09.07	T. K.	T. G.	K. T.

REVISIONS 改訂

2005.04.25
承認 APPROVED: K. Tanahashi
照査 CHECKED: T. Ito
作図 DRAWN: J. Kawashima

川崎重工 本所カンパニー KOBE, JAPAN
KAWASAKI HEAVY INDUSTRIES, LTD.
RAILWAY COMPANY

タイトル TITLE: WINDOW PANE-CAB CONDUCTOR SIDE
運転室側窓ガラス

CUST DRG. NO.
KHI DRG. NO. 61511-03508 (c)
SHEET 1/1
REVISION

生産技術 PRODUCTION ENGINEERING
承認 APPROVED | 照査 CHECKED | 作図 DRAWN

ASSY WEIGHT : 17.00 LBS Solid 3D

PA-5	A31	131	c

62004-03511C

PY-80591-B

GENERAL NOTES	
NOTES	CONTENTS
1	FLATNESS OF 37.02/100= 0.37" [9.398mm]

LIST OF MATERIALS						
QTY	ITEM	REMARK	PYRAMID PART NUMBER	DESCRIPTION	MATERIAL / SPECIFICATION	WEIGHT
1	1		PY-80591 P/N 32004-03511	GLAZING	GREY POLYCARBONATE 0.48" THK. WITH 50% VLT	13.4 lbs
1	2		PY-51454 P/N 33031-03512	VANDAL FILM	NABICO CIFAR VANDAL SHIELD ICI-600-NF3SR. (NS10F	N/A

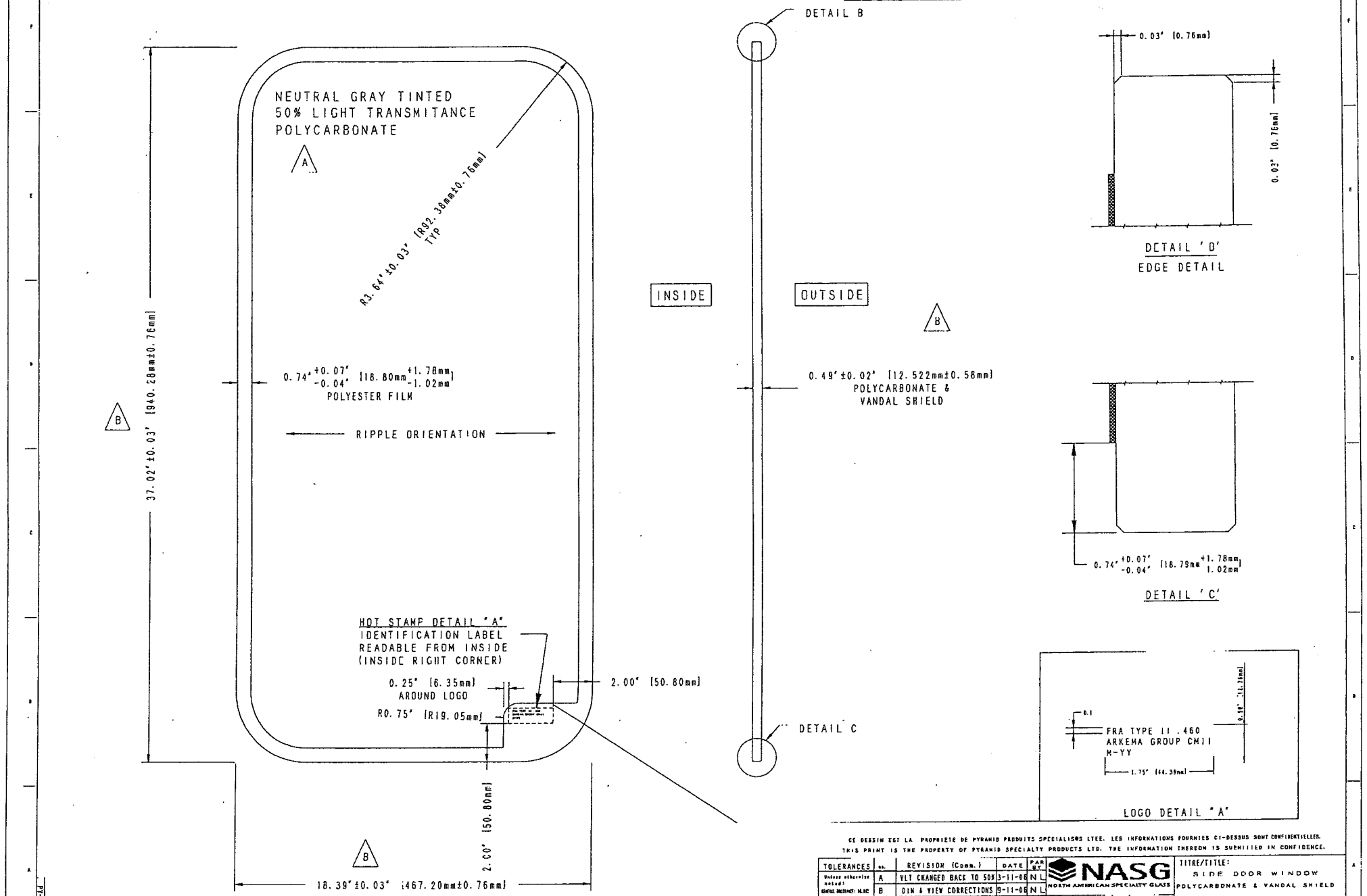

CE DESSIN EST LA PROPRIETE DE PYRAMID PRODUITS SPECIALISES LTEE. LES INFORMATIONS FOURNIES CI-DESSUS SONT CONFIDENTIELLES.
THIS PRINT IS THE PROPERTY OF PYRAMID SPECIALTY PRODUCTS LTD. THE INFORMATION THEREON IS SUBMITTED IN CONFIDENCE.

TOLERANCES	no.	REVISION (Comm.)	DATE	PAR. R.T.
Unless otherwise noted: GENERAL TOLERANCE: ±0.5C	A	VLT CHANGED BACK TO 50%	3-11-06	N L
	B	DIM & VIEW CORRECTIONS	3-11-06	N L

NASG NORTH AMERICAN SPECIALTY GLASS

TITRE/TITLE: SIDE DOOR WINDOW POLYCARBONATE & VANDAL SHIELD

	DATE	PAR R.T.
DESSINE DRAWN	07/02/06	N L
APPROUVE APP'D.	6/11/06	S D

MAT'L. Catalog Series: NONE

DESSIN/DWG. NO: PY-80591-B REV.

APPLICABLE CAR	SET/CAR	WT/CAR	EFFECTIVITY
A	12	△1 60.8	ALL CARS
C	12	△1 60.8	ALL CARS

Subject to the Authority's rights and Allowable Uses granted per Article 105 of the PATH New Railcar Procurement Contract (Number 4600005739), KAWASAKI RAIL CAR, INC. reserves all rights in and to any patents, trademarks, trade secrets and other intel

UNLESS OTHERWISE SPECIFIED TOLERANCE OF DIMENSIONS	
0.02"-0.12" (0.6- 3)	±0.01" (0.2)
0.12"-0.24" (3- 6)	±0.01" (0.3)
0.24"-1.20" (6- 30)	±0.02" (0.5)
1.20"-4.76" (30- 120)	±0.03" (0.8)
4.76"-12.5" (120- 315)	±0.05" (1.2)
12.5"-40.0" (315-1000)	±0.08" (2.0)
40.0" 80.0" (1000-2000)	±0.12" (3.0)
OVER 80.0" (2000-)	±0.25" (6.0)
ANGLES	±1°
DRILLED HOLE DIA. TOLERANCES	
0.12"-0.24" (3- 6)	+0.005" (0.15) -0
0.24"-0.47" (6-12)	+0.010" (0.25) -0
0.47"-0.98" (12-25)	+0.012" (0.30) -0
0.98"-1.97" (25-50)	+0.016" (0.40) -0

CLASSIFICATION 形状区分	
1	
2	
3	
4	
5	

SCALE 縮尺	NTS
MATERIAL 材質	
WEIGHT (LBS) 重量(kg)	
SURFACE TREATMENT 表面処理	PAINT 塗装 YES NO

REV.	ECO. NO.	DESCRIPTION 変更内容	DATE	DRAWN	CHECKED	APP'D
c	06RC2127	REVISED VENDOR DRAWING	06.12.01	T.K.	T.G.	K.T.
b	06RC1750	REVISED VENDOR DRAWING	06.06.07	T.K	T.G	K.T
a	06RC1662	REVISED VENDOR DRAWING	06.06.07	T.K	T.G	K.T

REVISIONS 変更

2006-04-14
承認 APPROVED K.Kubohara
承認 CHECKED T.Goto
作成 DRAWN T.Kawashima

川崎重工 KAWASAKI HEAVY INDUSTRIES, LTD. 兵庫カンパニー KOBE JAPAN
BUILDING SERVICE & CONSTRUCTION DEPARTMENT

TITLE: WINDOW PANE-SIDE SLIDING DOOR
側引戸窓ガラス

図面番号 DRG. DRG. NO. | 明細図番号 DRG. NO.

製図 DRAWING NO. 62004-03511 C

PRODUCTION ENGINEERING 生産技術	
承認 APPROVED	承認 CHECKED
作成 DRAWN	

ASSY WEIGHT : 13.40 LBS Solid WX

PROJECT	SYS. CODE	SEQ. NO.	REVISION
PA-5	431	152	C

SHEET 1 / 1

62004-03511©

PY-80591-B

GENERAL NOTES	
NOTES	CONTENTS
1	FLATNESS OF 37.02/100= 0.37" (9.398mm)

LIST OF MATERIALS

QTY	ITEM	REMARK	PYRAMID PART NUMBER	DESCRIPTION	MATERIAL / SPECIFICATION	WEIGHT
1	1		PY-80591 P/N 62004-03511	GLAZING	GREY POLYCARBONATE 0.48" THK. WITH 50% VLT	13.4 Lbs
1	2		PY-51454 P/N 33031-03512	VANDAL FILM	MADICO CIFAR VANDAL SHIELD (CI-690-RF35L, INSIDE	N/A

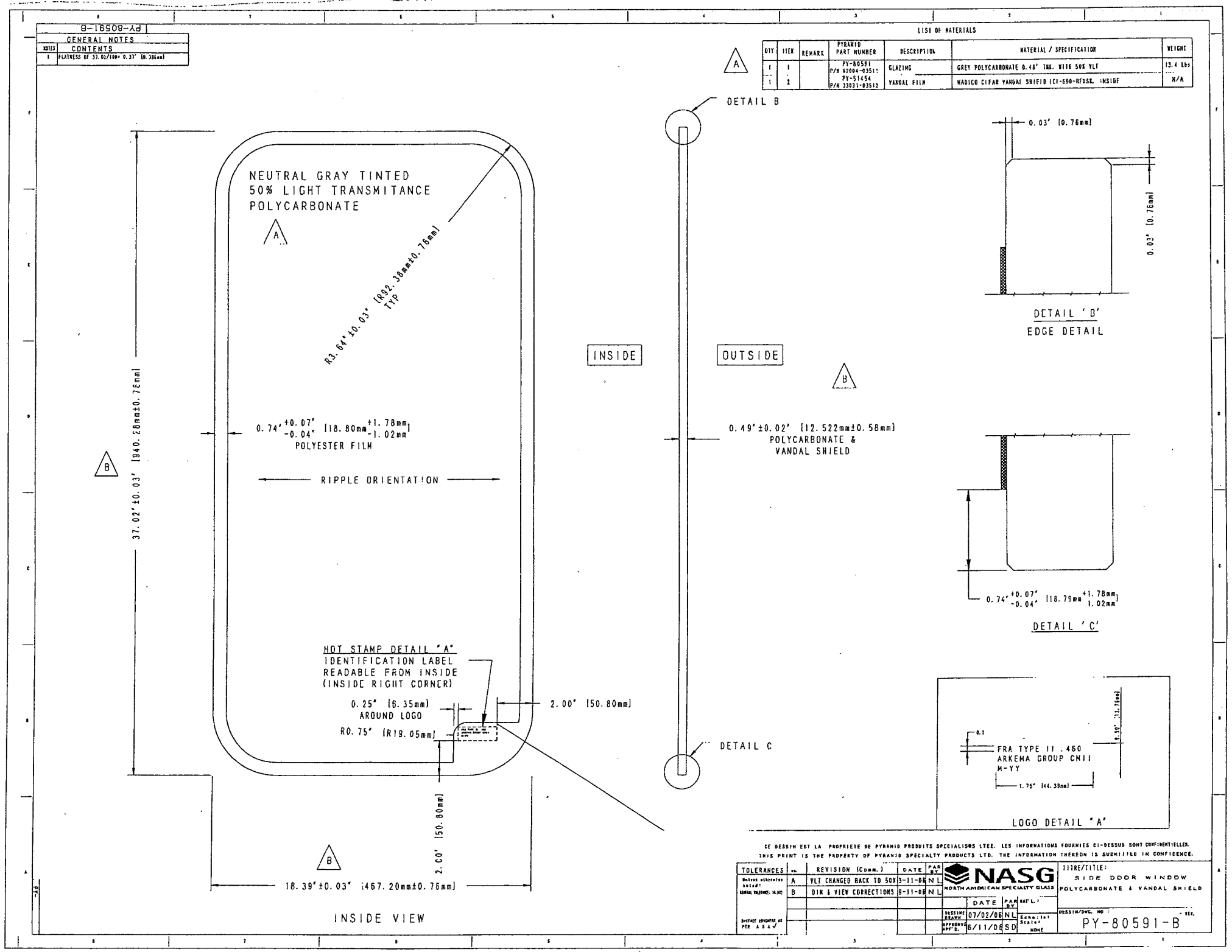

CE DESSIN EST LA PROPRIETE DE PYRAMID PRODUITS SPECIALISES LTEE. LES INFORMATIONS FOURNIES CI-DESSUS SONT CONFIDENTIELLES.
THIS PRINT IS THE PROPERTY OF PYRAMID SPECIALTY PRODUCTS LTD. THE INFORMATION THEREON IS SUBMITTED IN CONFIDENCE.

TOLERANCES	REV.	REVISION (Comm.)	DATE	PAR BY	
Unless otherwise noted: GENERAL TOLERANCE: ±0.02	A	VLT CHANGED BACK TO 50%	3-11-06	NL	
	B	DIM & VIEW CORRECTIONS	9-11-06	NL	
INSERT VENDOR'S LO PER A.S.A.V					

	DATE	PAR BY	
DESIGNED BY	07/02/06	NL	
APPROVED APP'D.	6/11/06	SD	

NASG NORTH AMERICAN SPECIALTY GLASS

TITRE/TITLE: SIDE DOOR WINDOW POLYCARBONATE & VANDAL SHIELD

DESSIN/DWG. NO: PY-80591-B REV.

APPLICABLE CAR	SET/CAR	WT/CAR	EFFECTIVITY
A	12	60.8	ALL CARS
C	12	60.8	ALL CARS

Subject to the Authority's rights and Allowable Uses granted per Article 105 of the PAIR New Rolling Stock Procurement Contract (Number 4500045739). KAWASAKI RAIL CAR, INC. reserves all rights in and to any patents, trademarks, trade secrets and other info!

UNLESS OTHERWISE SPECIFIED
TOLERANCE OF DIMENSIONS
0.02"-0.12" (0.5- 3) ±0.01" (0.2)
0.12"-0.24" (3- 6) ±0.01" (0.3)
0.24"-1.20" (6- 30) ±0.02" (0.5)
1.20"-4.70" (30- 120) ±0.03" (0.8)
4.70"-12.5" (120- 315) ±0.05" (1.3)
12.5"-40.0" (315-1000) ±0.08" (2.0)
40.0" (1000-2000) ±0.12" (3.0)
OVER 80.0" (2000-) ±0.25" (6.0)
ANGLES ±1°
DRILLED HOLE DIA. TOLERANCES
0.12"-0.24" (3- 6) +0.004" (0.10) -0
0.24"-0.47" (6-12) +0.010" (0.25) -0
0.47"-0.98" (12-25) +0.012" (0.30) -0
0.98"-1.97" (25-50) +0.016" (0.40) -0

CLASSIFICATION 形状区分	
1	
2	
3	
4	
5	

SCALE 縮尺: NTS
MATERIAL 材質
WEIGHT (LBS) 重量(Lb)
SURFACE TREATMENT 表面処理
PAINT 塗装: Yes

REV. 改訂記号	ECO. NO. 変更指示 NO.	DESCRIPTION 改訂内容	DATE 改訂日付	DRAWN 担当	CHECKED 審査	APP'D 承認
c	06RC2127	REVISED VENDOR DRAWING.	06.12.01	J.K	T.G	K.T
b	06RC1750	REVISED VENDOR DRAWING.	06.03.07	T.K	I.G	K.T
a	06RC1663	REVISED VENDOR DRAWING.	06.03.07	T.K	I.G	K.T

REVISIONS 改訂

2006-04-14
承認 APPROVED: K. Nakahara
審査 CHECKED: T. Goto
作成 DRAWN: T. Kawashima

川崎重工 兵庫カワサキ KOBE-JAPAN
KAWASAKI HEAVY INDUSTRIES, LTD.
ROLLING STOCK & CONSTRUCTION DIVISION
SATITLE: WINDOW PANE-SIDE SLIDING DOOR
側引戸窓ガラス
参照 ORIG. DRG. NO.
参照図番 ORIG. DRG. NO.
図番 DRG. NO. 62004-03511©
KG KRD-SHEET 1/1

生産技術 PRODUCTION ENGINEERING: 承認 APPROVED | 審査 CHECKED | 作成 DRAWN

ASSY WEIGHT : 13.40 LBS Solid RY

PROJECT	SYS. CODE	SER. NO.	REVISION
PA-5	431	152	©

65483-03501(a)

PE 26-9-12

LIST OF MATERIALS

QTY	I'EM	REMARK	PYRAMID PART NUMBER	DESCRIPTION	MATERIAL / SPECIFICATION	WEIGHT
1	1		PY-80588 P/N 65483-03501	GLAZING	CLEAR LAMINATED GLASS 0.375" THK 74% VLT	9.4 Lbs.
2	2		PY-51453 P/N 33031-03513	VANDAL FILM	MADICO CLEAR VANDAL SHIELD LCL-006-BFSR, BOTH SIDES	N/A

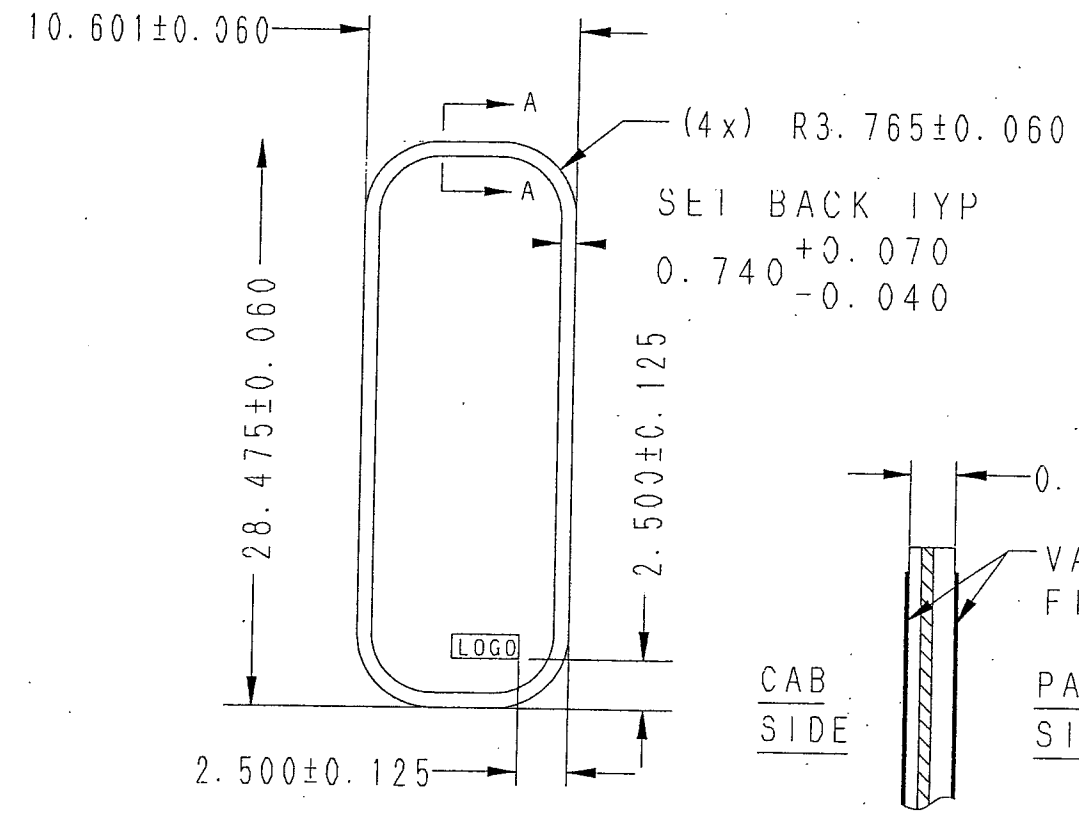

PASSENGER SIDE VIEW

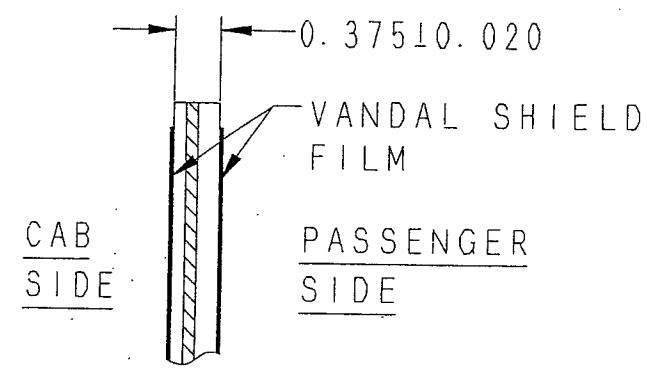

SECTION A-A
NO SCALE

NOTES:

1. CLEAR LAMINATED SAFETY GLASS.
2. ALL EDGES TO BE CONDITIONED FOR SAFE HANDLING.
3. FLATNESS SHALL BE LESS THAN 0.030 INCH PER LINEAR FOOT.
4. OVERLAP SHALL NOT EXCEED 1/32 INCH.
5. APPLY VANDAL SHIELD FILM ON BOTH SIDE.
6. APPROX. WEIGHT: 9.4 LBS
7. VISIBLE LIGHT TRANSMISSION: 74% ±4%

NASG
NORTH AMERICAN SPECIALTY GLASS
FRA Type II
AS I DOT 103 SMP-090
Year.....

LOGO DETAIL
SCALE: NONE
READABLE TO INTERIOR SIDE

REVISION NUMBER	DESCRIPTION	DATE	DRAWN BY
1	ADDED NOTE #7	8/24/06	P. X.

DRAWN BY: P. X.
CHECKED BY:
APPROVED BY:
DATE: 3/29/06
SCALE: NONE

TOLERANCES:
1 PLC DECIMALS 0.06
2 PLC DECIMALS 0.06
ANGLES ±
FRACTIONS ±
DIMENSIONS ARE IN INCH.
DO NOT SCALE DRAWING

NASG
NORTH AMERICAN SPECIALTY GLASS
2175 KUMRY ROAD P.O. BOX 70
TRUMBAUERSVILLE, PENNA. 18970-0070
PHONE: (215) 536-0333 FAX: (215) 536-2025

TITLE: KAWASAKI CAB PARTITION WINDOW GLASS

DRAWING NUMBER (SHOWN): PY-80588
DRAWING NUMBER (OPP. HAND):

CUSTOMER DWG. 65483-03501 REV

NOTICE

APPLICABLE CAR	SET/CAR	WT/CAR	EFFECTIVITY
A	1	9.4	ALL CARS
C			

Subject to the Authority's rights and Allowable Uses granted per Article 105 of the PATH New Rail Car Procurement Contract (Number 460000579). KAWASAKI RAIL CAR, INC. reserves all rights in and to any patents, trademarks, trade secrets and other intellectual property and proprietary information contained in this drawing, which are the property of KAWASAKI RAIL CAR, INC. or its licensees.

UNLESS OTHERWISE SPECIFIED
TOLERANCE OF DIMENSIONS
0.03"~0.12" (0.5~ 3) ±0.01" (0.2)
0.12"~0.24" (3~ 6) ±0.01" (0.3)
0.24"~1.20" (6~ 30) ±0.02" (0.5)
1.20"~4.70" (30~ 120) ±0.03" (0.8)
4.70"~12.5" (120~ 315) ±0.05" (1.3)
12.5"~40.0" (315~1000) ±0.08" (2.0)
40.0"~80.0" (1000~2000) ±0.12" (3.0)
OVER 80.0" (2000~) ±0.25" (6.0)
ANGLES ±1°
DRILLED HOLE DIA. TOLERANCES
0.12"~0.24" (3~ 6) +0.006" (0.15) -0
0.24"~0.47" (6~12) +0.010" (0.25) -0
0.47"~0.98" (12~25) +0.012" (0.30) -0
0.98"~1.97" (25~50) +0.016" (0.40) -0

CLASSIFICATION 形状区分	
1	
2	
3	
4	
5	

SCALE 縮尺: NTS
MATERIAL 材質
WEIGHT (LBS) 重量(kg)
SURFACE TREATMENT 表面処理
PATNT 特許 Yes

REV. 改訂記号	ECO. NO. 変更通知 NO.	DESCRIPTION 改訂内容	DATE 改訂日付	DRAWN 担当	CHECKED 審査	APP'D 承認
a	06RC1750	REVISED TITLE BLOCK. CORRECTED INTELLECTUAL STATEMENT.	06.05.17	T.K.	T.G.	K.T.

REVISIONS 改訂

2006-04-25
承認 APPROVED: K. Ishihara
審査 CHECKED: T. Ito
作成 DRAWN: T. Kawashima

川崎重工 車両カンパニー KOBE, JAPAN
KAWASAKI HEAVY INDUSTRIES, LTD.
RAILWAY COMPANY

TITLE: WINDOW PANE-CAB PARTITION
運転室仕切窓ガラス

RAIL CAR ORIG. DRG. NO.
KHI ORIG. DRG. NO.

DRG. NO. 65483-03501 (a)
SHEET 1/1

ASSY WEIGHT : 9.40 LBS Solid WT

PRODUCTION ENGINEERING 生産技術		
承認 APPROVED	審査 CHECKED	作成 DRAWN

PROJECT	SYS. CODE	SER. NO.	REVISION
PA-5	431	172	(a)

65483-03501(a)

PE 06.9.12

LIST OF MATERIALS

QTY	ITEM	REMARK	PTRANID PART NUMBER	DESCRIPTION	MATERIAL / SPECIFICATION	WEIGHT
1	1		PT-09588 P/N 65483-03501	GLAZING	CLEAR LAMINATED GLASS 0.375" THK 74% VLT	9.4 LBS.
2	2		PT-51453 P/N 33031-03513	VANDAL FILM	MADICO CLEAR VANDAL SHIELD LCL-600-8FISR. BOTH SIDES	N/A

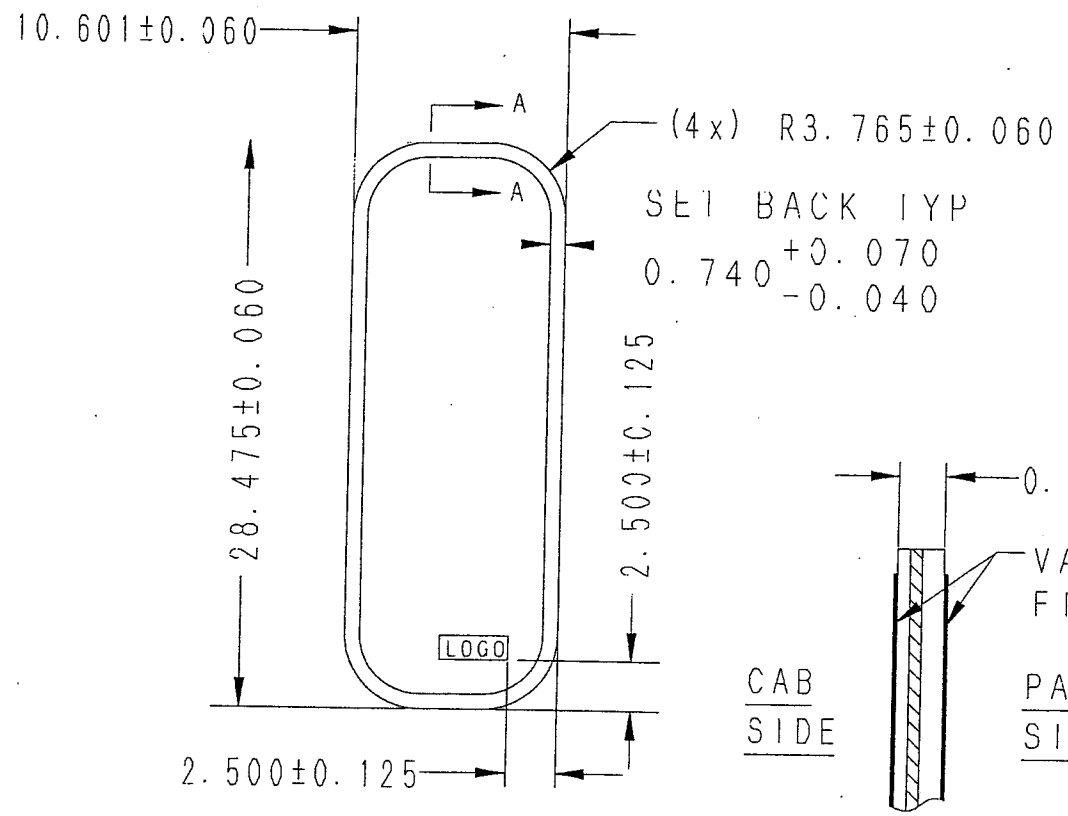

PASSENGER SIDE VIEW

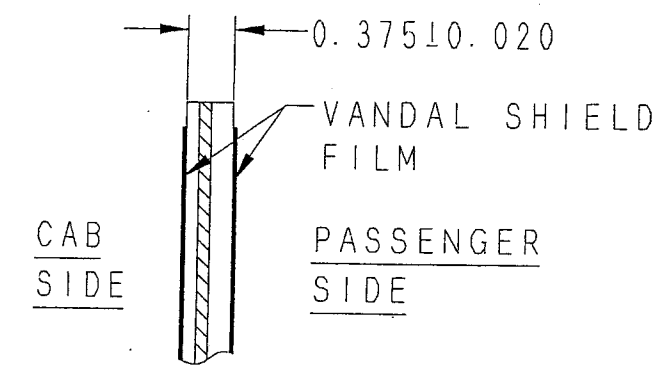

SECTION A-A
NO SCALE

NOTES:

1. CLEAR LAMINATED SAFETY GLASS.
2. ALL EDGES TO BE CONDITIONED FOR SAFE HANDLING.
3. FLATNESS SHALL BE LESS THAN 0.030 INCH PER LINEAR FOOT.
4. OVERLAP SHALL NOT EXCEED 1/32 INCH.
5. APPLY VANDAL SHIELD FILM ON BOTH SIDE.
6. APPROX. WEIGHT: 9.4 LBS
7. VISIBLE LIGHT TRANSMISSION: 74% ±4%

NASG
NORTH AMERICAN SPECIALTY GLASS
FRA Type II
AS 1 DOT 103 SMP-090
Year.....

LOGO DETAIL
SCALE:NONE
READABLE TO INTERIOR SIDE

REVISION NUMBER	DESCRIPTION	DATE	DRAWN BY
1	ADDED NOTE #7	8/24/06	P. X.

DRAWN BY: P. X.
CHECKED BY:
APPROVED BY:
DATE: 3/29/06
SCALE: NONE

TOLERANCES:
1 PLC DECIMALS 0.06
2 PLC DECIMALS 0.06
ANGLES ±
FRACTIONS ±
DIMENSIONS ARE IN INCH.
DO NOT SCALE DRAWING

NASG
NORTH AMERICAN SPECIALTY GLASS
2175 KUNRY ROAD P.O. BOX 70
TRUMBAUERSVILLE, PENNA. 18970-0070
PHONE: (215) 536-0333 FAX: (215) 536-2025

TITLE: KAWASAKI CAB PARTITION WINDOW GLASS

DRAWING NUMBER (SHOWN): PY-80588
DRAWING NUMBER (OPP. HAND):

CUSTOMER DWG. 65483-03501 REV

NOTICE

APPLICABLE CAR	SET/CAR	WT/CAR	EFFECTIVITY
A	1	9.4	ALL CARS
C			

Subject to the Authority's rights and Allowable Uses granted per Article 105 of the PATH New Railcar Procurement Contract (Number 4600005779), KAWASAKI RAIL CAR, INC. reserves all rights in and to our patents, trademarks, trade secrets and other intellectual property and proprietary information contained in this drawing, which are the property of KAWASAKI RAIL CAR, INC. or its licensees.

UNLESS OTHERWISE SPECIFIED
TOLERANCE OF DIMENSIONS

0.00"~0.12" (0.0~3)	±0.01" (0.2)
0.12"~0.24" (3~6)	±0.01" (0.3)
0.24"~1.20" (6~30)	±0.02" (0.5)
1.20"~4.70" (30~120)	±0.03" (0.8)
4.70"~12.5" (120~315)	±0.05" (1.3)
12.5"~40.0" (315~1000)	±0.08" (2.0)
40.0"~80.0" (1000~2000)	±0.12" (3.0)
OVER 80.0" (2000~)	±0.25" (6.0)

ANGLES ±1°

DRILLED HOLE DIA. TOLERANCES

0.12"~0.24" (3~6)	+0.008" (0.15) -0
0.24"~0.47" (6~12)	+0.010" (0.25) -0
0.47"~0.98" (12~25)	+0.012" (0.30) -0
0.98"~1.97" (25~50)	+0.016" (0.40) -0

CLASSIFICATION 形状区分	
1	
2	
3	
4	
5	

SCALE 縮尺: NTS
MATERIAL 材質
WEIGHT (LBS) 重量(kg)
SURFACE TREATMENT 表面処理
PAINT 塗装 Yes

REV. 改訂記号	ECO. NO. 承認番号	DESCRIPTION 改訂内容	DATE 改訂日付	DRAWN 記入	CHECKED 検図	APP'D 承認
a	06RC1750	REVISED VENDOR DRAWING. CORRECTED INTELLECTUAL STATEMENT.	06.05.17	T.K.	T.G.	K.T.

REVISIONS 改訂

2006-04-25
承認 APPROVED: K. Sakahara
審査 CHECKED: T. Goto
作成 DRAWN: T. Kawashima

川崎重工 車両カンパニー KOBE, JAPAN
KAWASAKI HEAVY INDUSTRIES, LTD.
BUILDING SERVICE & CONSTRUCTION SUBSTRUCT COMPANY

タイトル TITLE: WINDOW PANE-CAB PARTITION
車両窓仕切窓ガラス

川崎重工 ORIG. DRG. NO.
NASG ORIG. DRG. NO.

図番 DRG. NO. 65483-03501 a
川崎重工 1/1

PROJECT: PA-5 | SYS. CODE: 431 | SER. NO.: 172 | REVISION: a

ASSY WEIGHT : 9.40 LBS
Solid MX

PRODUCTION ENGINEERING
承認 APPROVED | 審査 CHECKED | 作成 DRAWN

61506-03533F

JV-80648-B

GENERAL NOTES	
NOTES	CONTENTS
1	PLASTICS OF 32.22/134- 0.32" OR 7834mm

OTT	ITEM	REMARK	PYRAMID PART NUMBER	DESCRIPTION	MATERIAL / SPECIFICATION	WEIGHT
1	1		PY-80648 P/N 80649	GLAZING	CLEAR LAMINATE 0.48" THK WITH PSK VLT	15 LBS.
1	2		P/N XXXXX-XXXXX	PAINT	DUBUIT BLACK PAINT AND WHITE FOR LOGO	N/A

LIST OF MATERIALS

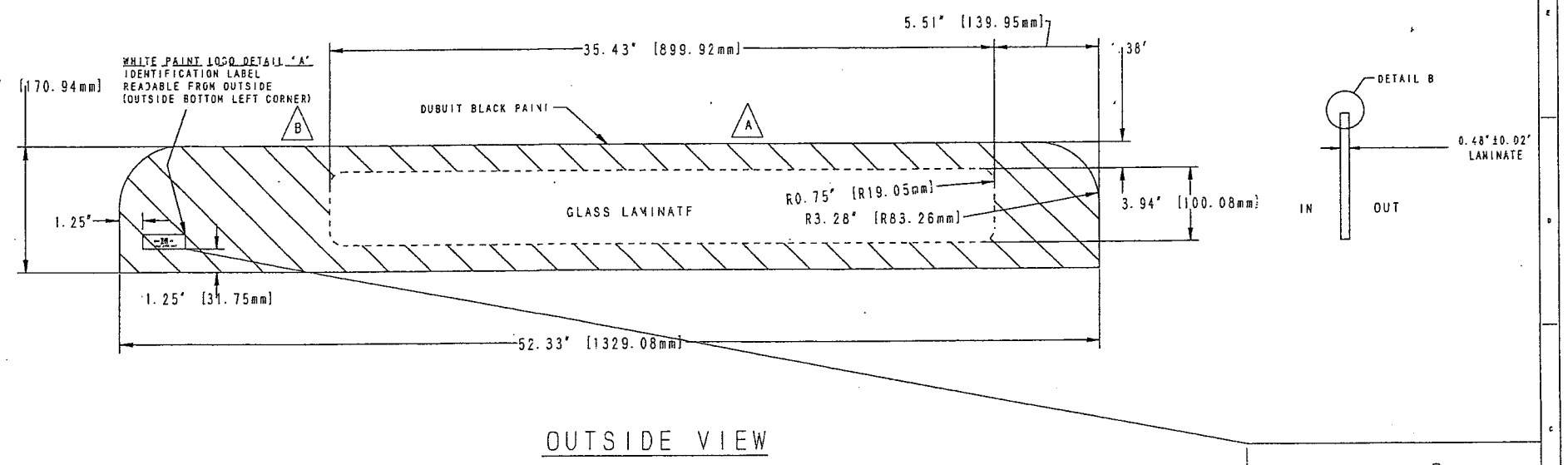

OUTSIDE VIEW

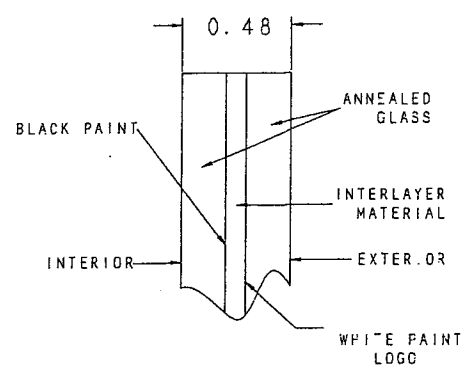

DETAIL B
EDGE DETAIL

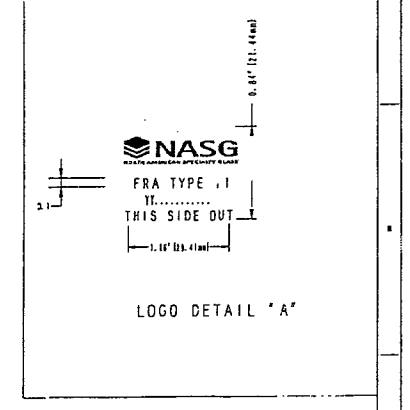

TOLERANCES	REV.	REVISION (Cont.)	DATE	PAR BY
Unless otherwise noted: CENTAL INSURANCE: ±0.125	A	CHANGED LOGO TO READ OUTSIDE WHICH SWITCHED THE PAINT ON LOGO	3/27/08	JJB
	B	CORRECTED LOGO DESCRIPTION	4/3/08	JJB
SURFACE ROUGHNESS AS PER A S A M				

NASG NORTH AMERICAN SPECIALTY GLASS

	DATE	PAR BY
DESIGN/DRAWN	02/25/08	JJB
APPROVED APP'D.		

MATL'L: Schottler Sentry NONE

TITRE/TITLE: DESTINATION SIGN GLASS LAMINATE

DESIGN/DWG. NO.: PY-80648-B

APPLICABLE CAR	SET/CAR	WT/CAR	EFFECTIVITY
A	2	30.0	ALL CARS
C	2	30.0	ALL CARS

Subject to the Authority's rights and A lowable Uses granted our Article 105 of the PATH New Rail car Procurement Contract (Number 4600057378), KAWASAKI RAIL CAR, INC. reserves all rights in and to our patents, trademarks, trade secrets and other intellectual property and proprietary information contained in this drawing, which are the property of KAWASAKI RAIL CAR, INC. or its licensees.

UNLESS OTHERWISE SPECIFIED
TOLERANCE OF DIMENSIONS

0.02"-0.12" (0.5- 3)	±0.0"" (0.0)
0.12"-0.24" (3- 6)	±0.0.0"" (0.3)
0.24"-1.20" (6- 30)	±0.02" (0.5)
1.20"-4.78" (30- 120)	±0.03" (0.8)
4.78"-12.5" (120- 315)	±0.05" (1.3)
12.5"-40.0" (315-1000)	±0.08" (2.0)
40.0"-80.0" (1000-2000)	±0.12" (3.0)
OVER 80.0" (2000-)	±0.25" (6.0)

ANGLES ±1°

DRILLED HOLE DIA. TOLERANCES

0.12"-0.24" (3- 6)	+0.008" (0.18)-0
0.24"-0.47" (6-12)	+0.010" (0.25)-0
0.47"-0.98" (12-25)	+0.012" (0.30)-0
0.98"-1.97" (25-50)	+0.016" (0.40)-0

CLASSIFICATION 部材区分	
1	
2	
3	
4	
5	

SCALE 縮尺	NTS
MATERIAL 材質	
WEIGHT (LBS) 重量(kg)	
SURFACE TREATMENT 表面処理	PAINT 塗装 Yes (No)

REV. 改訂	ECO. NO. 変更番号	DESCRIPTION 改訂内容	DATE 改訂日付	DRAWN 担当	CHECKED 審査	APP'D 承認
f	08RC0659	REVISED VENDOR DRAWING	08.04.07	T.K	T.G	T.U
e	08RC0427	CHANGED MATERIAL AND WEIGHT.	08.03.03	T.K	T.G	T.U
d	07RC2878	CHANGED CUTOUT LOCATION. CHANGED ORIENTATION OF GLASS MARK.	07.12.06	T.K	T.G	T.U
c	06RC2720	REVISED VENDOR DRAWING.	06.12.01	T.K	T.G	K.T
b	06RC1750	REVISED VENDOR DRAWING.	06.08.07	T.K	T.G	K.T
a	06RC1663	REVISED VENDOR DRAWING.	06.08.09	T.K	T.G	K.T

REVISIONS 改訂

生産技術 PRODUCTION ENG VERIFIED 承認 APPROVED | 審査 CHECKED | 作成 DRAWN

ASSY WEIGHT : 15.00 LBS

2005-04-14
承認 APPROVED K. Inoshima
審査 CHECKED T. Sato
作成 DRAWN H. Kawashima

川崎重工 KOBE JAPAN
KAWASAKI HEAVY INDUSTRIES, LTD.
ROLLING STOCK & CONSTRUCTION MACHINERY COMPANY

TITLE: WINDOW PANE-SIDE

参考 REF. DRG. NO. | 関係図番 RELATED DRG. NO.

図番 DRG. NO. 61506-03533F | 総枚数 SHEET 1 | 1

PROJECT	SYS. CODE	SER. NO.	REVISION
PA-5	431	123	

61506-035331

PY-80648-B

GENERAL NOTES	
NOTES	CONTENTS
1	FLATNESS OF 1/8 [3.17mm] x 8 1/2" [216.2mm]

LIST OF MATERIALS

QTY	ITEM	REMARK	PYRAMID PART NUMBER	DESCRIPTION	MATERIAL / SPECIFICATION	WEIGHT
1	1		PY-80648 P/N 80645	GLAZING	CLEAR LAMINATE 0.48" THK WITH RSS VLT	15 LBS.
1	2		P/N [illegible]	PAINT	DUBUIT BLACK PAINT AND WHITE FOR LOGO	N/A

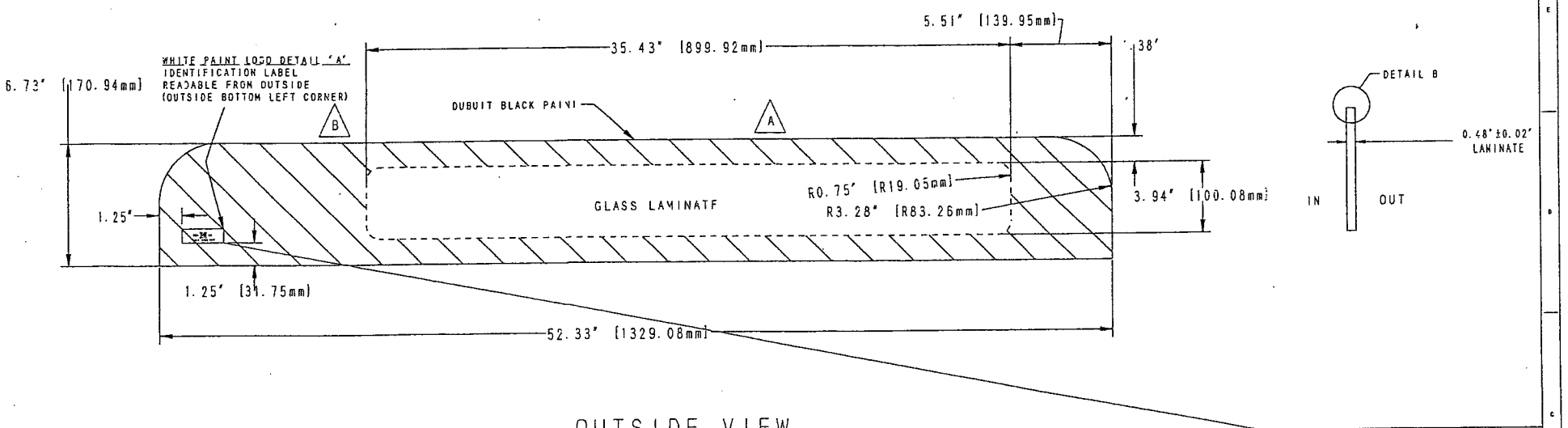

OUTSIDE VIEW

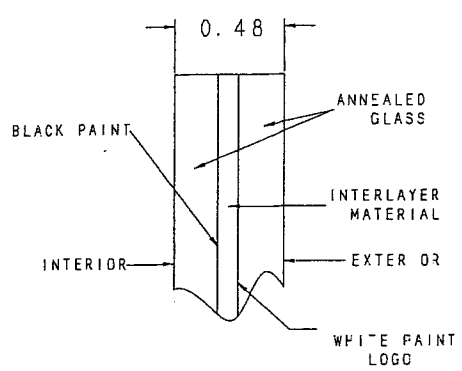

DETAIL B
EDGE DETAIL

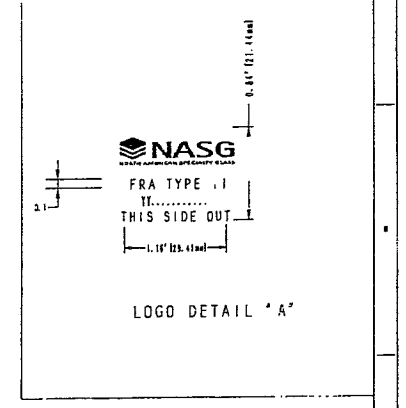

LOGO DETAIL 'A'

TOLERANCES	REV.	REVISION (Comm.)	DATE	PAR BY
Unless otherwise noted: LINEAR TOLERANCE: ±0.03	A	CHANGED LOGO TO READ OUTSIDE WHICH SWITCHED THE PAINT ON LOGO	3/27/08	JJB
	B	CORRECTED LOGO DESCRIPTION	4/3/08	JJB
SURFACE ROUGHNESS AS PER A.S.A.V.				

NASG NORTH AMERICAN SPECIALTY GLASS

	DATE	PAR BY
DESSINE DRAWN	02/29/08	JJB
APPROUVE APP'D.		

MATL'L: Schuller Sealtite VONE

TITRE/TITLE: DESTINATION SIGN GLASS LAMINATE

DESSIN/DWG. NO.: PY-80648-B REV.

APPLICABLE CAR	SET/CAR	WT/CAR	EFFECTIVITY
A	2	30.0	ALL CARS
C	2	30.0	ALL CARS

Subject to the Authority's rights and Assignable Uses granted per Article 105 of the PATH New Railcar Procurement Contract (Number 4600005720), KAWASAKI RAIL CAR, INC. reserves all rights in and to any patents, trademarks, trade secrets and other intellectual property and proprietary information contained in this drawing, which are the property of KAWASAKI RAIL CAR, INC. or its licensees.

UNLESS OTHERWISE SPECIFIED

TOLERANCE OF DIMENSIONS

0.02"-0.12" (0.5- 3)	±0.01" (C.3)
0.12"-0.24" (3- 6)	±0.02" (C.3)
0.24"-1.20" (6- 30)	±0.02" (C.5)
1.20"-4.70" (30- 120)	±0.03" (C.8)
4.70"-12.5" (120- 315)	±0.05" (1.3)
12.5"-40.0" (315-1000)	±0.06" (2.0)
40.0"-80.0" (1000-2000)	±0.12" (3.0)
OVER 80.0" (2000-)	±0.25" (6.0)

ANGLES ±1°

DRILLED HOLE DIA. TOLERANCES

0.12"-0.24" (3- 6)	+0.006" (3.152) -0
0.24"-0.47" (6-12)	+0.010" (3.253) -0
0.47"-0.98" (12-25)	+0.012" (3.305) -0
0.98"-1.57" (25-50)	+0.016" (3.401) -0

CLASSIFICATION 表示区分	
1	
2	
3	
4	
5	

SCALE 縮尺	NTS
MATERIAL 材質	
WEIGHT (LBS) 重量(kg)	
SURFACE TREATMENT 表面処理	PAINT 塗装 Yes (No)

REV. 改訂	ECO. NO. 変更指示	DESCRIPTION 改訂内容	DATE 改訂日付	DRAWN 担当	CHECKED 審査	APP'D 承認
f	08RC0659	REVISED VENDOR DRAWING	08.04.07	T.K	T.G	T.U
e	08RC0427	CHANGED MATERIAL AND WEIGHT.	08.03.03	T.K	T.G	T.U
d	07RC2873	CHANGED CUTOUT LOCATION. CHANGED ORIENTATION OF GLASS MARK.	07.12.06	T.K	T.G	T.U
c	06RC2127	REVISED VENDOR DRAWING.	06.12.01	T.K	T.G	K.I
b	06RC1750	REVISED VENDOR DRAWING.	06.08.07	T.K	T.G	K.I
a	06RC1663	REVISED VENDOR DRAWING.	06.06.09	T.K	T.G	K.I

REVISIONS 改訂

定盤材料 PRODUCTION CMC MATERIAL	承認 APPROVED	審査 CHECKED	作成 DRAWN

ASSY WEIGHT : 15.00 LBS

2006-04-14
承認 APPROVED K.Sakahara
審査 CHECKED T.Ito
作成 DRAWN J.Kawashima

川崎重工 KOBE, JAPAN
KAWASAKI HEAVY INDUSTRIES, LTD.
ROLLING STOCK & CONSTRUCTIVE MACHINERY COMPANY

TITLE: WINDOW PANE-SIDE 側窓ガラス

元図番 ORIG. DRG. NO. | 切図番 DRG. NO.

図番 DRG. NO. 61506-035331 | 総枚数 TOTAL SHEET 1 | 枚目 SHEET 1

PROJECT	SYS. CODE	SER. NO	REVISION
PA-5	431	123	

61506-03531e

PY-71971-F

PE

D. S

M. M.

LIST OF MATERIALS

QTY	ITEM	REMARK	PYRAMID PART NUMBER	DESCRIPTION	MATERIAL / SPECIFICATION	WEIGHT
1			PY-71971 F/W 61506-03531	GLAZING	BOTTOM GREY POLYCARBONATE WITH SECONDARY HANDLE PAINTED WH	29.1 Lbs.
1	1		PY-72155	SECONDARY HANDLE	STST HANDLE SIZE DEPENDING LABEL FLORESCENT SIESTA 3M DOUBLE FACE TAPE	0.3 Lbs
1	2		PY-80594	GLAZING	GREY POLYCARBONATE 0.45" THK SOX VLT + MADICO VANDAL SHIELD INSIDE	27.8 Lbs.
2	3		PY-80647	SCREW	SCREW 8-32 X 3/8 TRUSS HEAD PHIL. STST	N/A

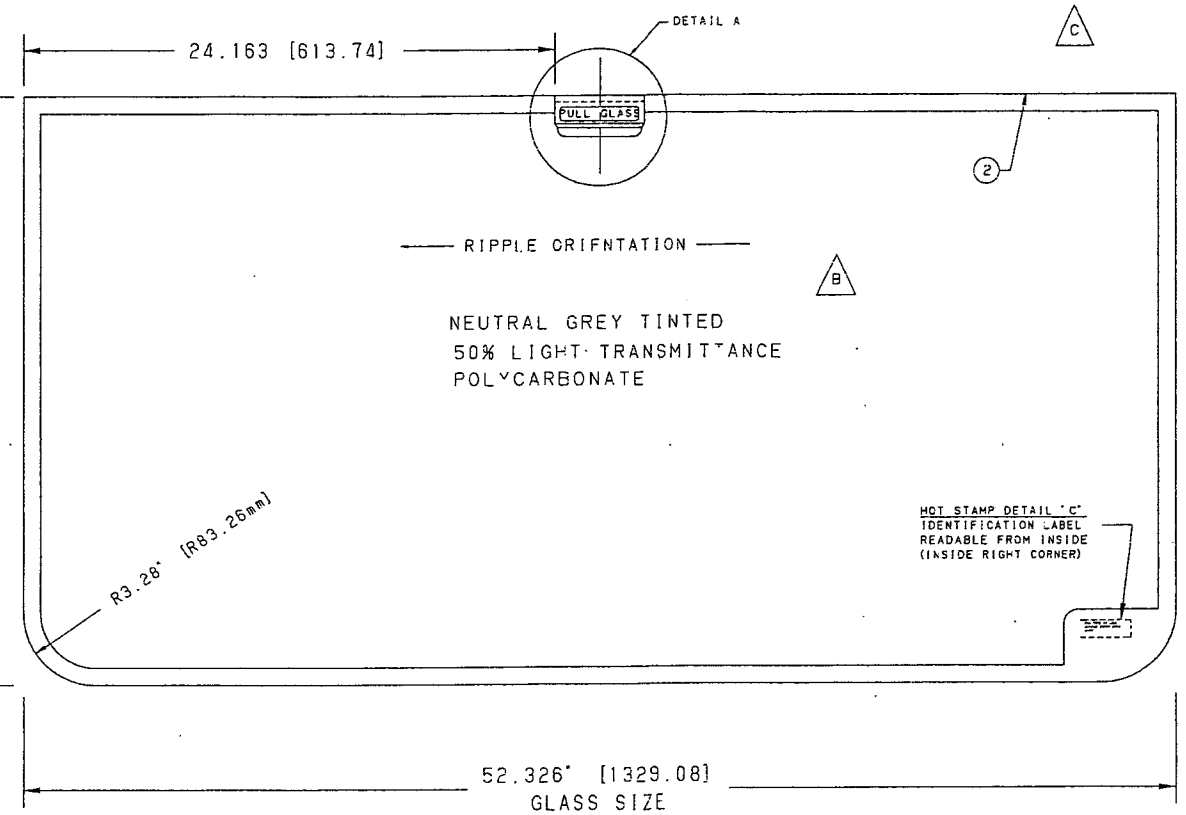

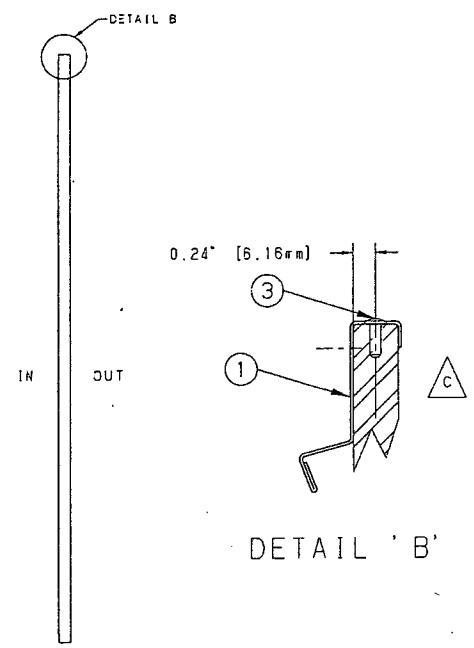

INSIDE VIEW

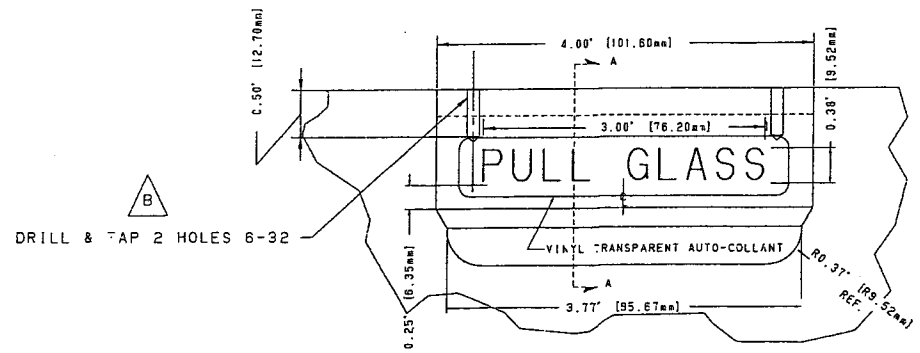

TOLERANCE GENERALE : ±0.030

DETAIL 'A'

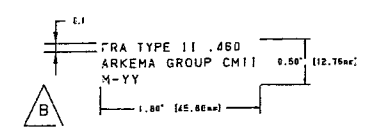

LOGO DETAIL "C"

TOLERANCES	no.	REVISION (Cont.)	DATE	PAR BY
Unless otherwise noted: GENERAL TOLERANCE: ±0.030	A	VLT CHANGED BACK TO 50%	3-11-06	NL
	B	LOGO & CORRECTIONS	9-11-06	NL
	C	HANDLE SHAPE & COLOR	3-08-07	NL
	D	HANDLE DESCRIPTION	28-08-07	NL
SURFACE ROUGHNESS AS PER A S A V	E	POLY DESCRIPTION CHANGED FROM CMII TO CPP	15/10/08	J SEKI

	DATE	PARTS BY
DESIGNED DRAWN	06/02/06	NL
APPROVED APP'D	3/11/06	SD

Schedule: Scale: NONE

TITLE: SIDE LARGE ESCAPE WINDOW
POLYCARBONATE WITH SECONDARY HANDLE

DESIGN/DWG. NO : PY-71971-F - REV.

F 17FK 1 VAS 51496 04/03/03 F.B

NOTE. KMM MUST INSTALL THE SECONDALY HANDLE, FLORECENT LABEL AND SCREWS TO THE ALNA WINDOWS.

注. アルナ窓ノ場合、2ヵd取手、蛍光ラベル及ビネジハKMMデ取付ケノコト。

APPLICABLE CAR	SET/CAR	WT/CAR	EFFECTIVITY
A	4	112.4	ALL CARS
C	4	112.4	ALL CARS

Subject to the Authority's rights and Allowable Uses granted per Article 105 of the PATH Rail car Procurement Contract (Number 4600065779), KAWASAKI RAIL CAR, INC. reserves all rights in and to our patents, trademarks, trade secrets and other intellectual property and proprietary information contained in this drawing, which are the property of KAWASAKI RAIL CAR, INC. or its licensors.

UNLESS OTHERWISE SPECIFIED
TOLERANCE OF DIMENSIONS
0.32"-0.12" (0.5- 3) ±0.01" (0.3)
0.12"-0.24" (3- 6) ±0.01" (0.3)
0.24"-1.20" (6- 30) ±0.02" (0.5)
1.20"-4.12" (30- 120) ±0.03" (0.8)
4.70"-12.5" (120- 315) ±0.05" (1.3)
12.5"-40.0" (315-1000) ±0.08" (2.0)
40.0"-80.0" (1000-2000) ±0.12" (3.0)
OVER 80.0" (2000-) ±0.25" (6.0)
ANGLES ±2°
DRILLED HOLE DIA. TOLERANCES
0.12"-0.24" (3- 6) +0.008" (0.15), -0
0.24"-0.47" (6-12) +0.010" (0.25), -0
0.47"-0.98" (12-25) +0.012" (0.30), -0
0.98"-1.37" (25-35) +0.016" (0.40), -0

CLASSIFICATION 形状区分	
1	
2	
3	
4	
5	

SCALE 縮尺: NTS
MATERIAL 材質
WEIGHT (LBS) 重量(kg)
SURFACE TREATMENT 表面処理
PAINT 塗装: Yes

REV. 改訂記号	ECO. NO. 設変番号	DESCRIPTION 改訂内容	DATE 改訂日付	DRAWN 製図	CHECKED 検図	APP'D 承認
e	09RC1150	ADDED NOTE.	09.4.17	T.K	T.K	K.T
d	06RC2127	REVISED VENDOR DRAWING.	06.12.01	T.K	T.G	K.T
c	06RC1750	REVISED VENDOR DRAWING.	06.03.07	T.K	T.G	K.T
b	06RC1663	REVISED VENDOR DRAWING.	06.06.07	T.K	T.G	K.T
a	06RC0928	REVISED VENDOR DRAWING.	06.04.25	T.K	T.G	K.T

REVISIONS 改訂

2006.04.14 承認 APPROVED K.Kawahara
承認 CHECKED T.Sato
作成 DRAWN T.Kawashima

川崎重工 KAWASAKI HEAVY INDUSTRIES, LTD. 車両カンパニー KOBE, JAPAN
ROLLING STOCK & CONSTRUCTION MACHINERY COMPANY

TITLE: WINDOW PANE-SIDE
側窓ガラス

元図番 ORIG. DRG. NO.
代替図番 ORIG. DRG. NO.
図番 DRG. NO. 61506-03531e
図番変更 REVISE NO. 1

生産設計 PRODUCTION ENGINEERING 承認 APPROVED 審査 CHECKED 作成 DRAWN

ASSY WEIGHT : 28.12 LBS Solic MX

PROJECT	SYS. CODE	SER. NO.	REVISION
PA-5	431	21	e

61506-03531e

PY-71971-F

QTY	ITEM	REMARK	PYRAMID PART NUMBER	DESCRIPTION	MATERIAL / SPECIFICATION	WEIGHT
1			PY-71971 P/N 61506-33531	GLAZING	BOTTOM GREY POLYCARBONATE WITH SECONDARY HANDLE PAINTED RE	28.1 Lbs.
1	1		PY-72155	SECONDARY HANDLE	STST HANDLE SLAB(REG) WITH LABEL FLORESCENT SISSTI 3M DOUBLE FACE TAPE	0.3 Lbs
1	2		PY-80594	GLAZING	GREY POLYCARBONATE 0.45" THK 50% VLT + MADICO VANDAL SHIELD INSIDE	27.8 Lbs.
2	3		PY-60647	SCREW	SCREW 6-32 X 3/8 TRUSS HEAD FINL. STST	N/A

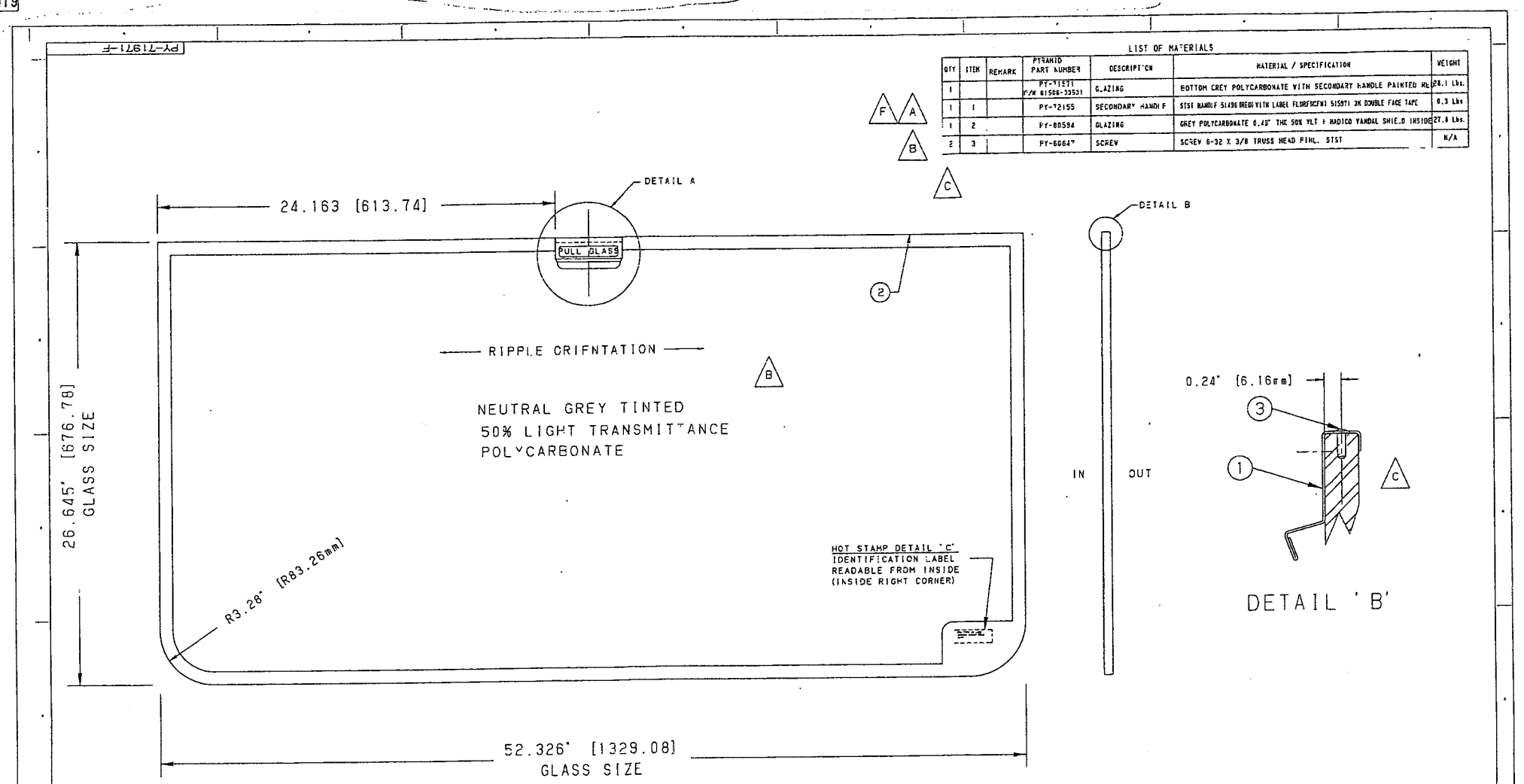

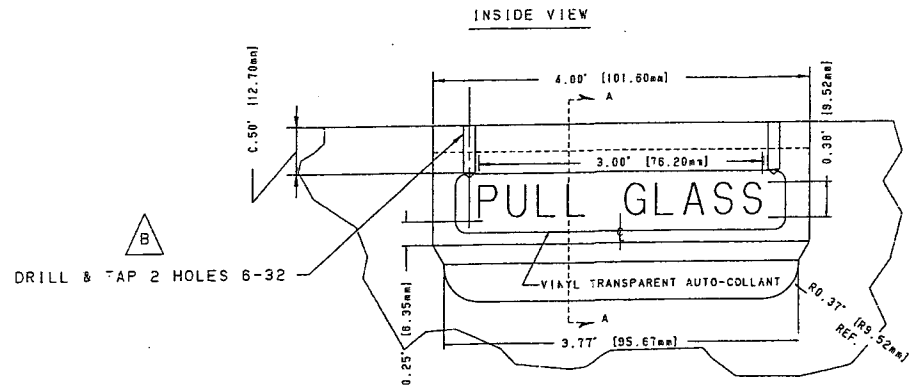

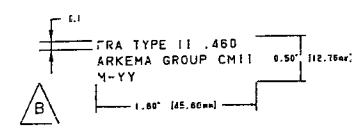

TOLERANCE GENERALE : ±0.030

TOLERANCES	no.	REVISION (Comm.)	DATE	PAR BY
Unless otherwise noted (GENERAL TOLERANCE: ±0.03)	A	VLT CHANGED BACK TO 50%	3-11-06	NL
	B	LOGO & CORRECTIONS	9-11-06	NL
	C	HANDLE SHAPE & COLOR	3-08-07	NL
	D	HANDLE DESCRIPTION	28-08-07	NL
SURFACE ROUGHNESS AS PER K & A-V	E	POLY DESCRIPTION CHANGED FROM CMII TO CPC	15/10/08	[illegible]

	DATE	PAR BY	MATL:
DESIGN DRAWN	06/02/06	NL	Kawasaki Special HOME
APPROVED APP'D	3/11/06	SD	

TITLE/TITLE: SIDE LARGE ESCAPE WINDOW
POLYCARBONATE WITH SECONDARY HANDLE

DESIGN/DWG. NO. : PY-71971-F REV.

F | ITEM 1 WAS 51496 | 04/03/03 | LS

NOTE. KMM MUST INSTALL THE SECONDALY HANDLE, FLORECENT LABEL AND SCREWS TO THE ALNA WINDOWS.

注. アルナ窓ノ場合、2ッd取手、蛍光ラベル及ビネジハKMMデ取付ケノコト。

APPLICABLE CAR	SET/CAR	WT/CAR	EFFECTIVITY
A	4	112.4	ALL CARS
C	4	112.4	ALL CARS

Subject to the Authority's rights and Allowable Uses granted per Article 105 of the PATH New Rail car Procurement Contract (Number A600065779), KAWASAKI RAIL CAR, INC. reserves all rights in and to any patents, trademarks, trade secrets and other intellectual property and proprietary information contained in this drawing, which are the property of KAWASAKI RAIL CAR, INC. or its licensees.

UNLESS OTHERWISE SPECIFIED

TOLERANCE OF DIMENSIONS

0.32"-0.12" (0.5- 3)	±0.01" (0.3)
0.12"-0.24" (3- 6)	±0.01" (0.3)
0.24"-1.20" (6- 30)	±0.02" (0.5)
1.20"-4.73" (30- 120)	±0.03" (0.8)
4.73"-12.5" (120- 315)	±0.05" (1.3)
12.5"-40.0" (315-1000)	±0.08" (2.0)
40.0"-80.0" (1000-2000)	±0.12" (3.0)
OVER 80.0" (2000-)	±0.25" (6.0)

ANGLES ±°

DRILLED HOLE DIA. TOLERANCES

0.12"-0.24" (3- 6)	+0.008" (0.15), -0
0.24"-0.47" (6-12)	+0.010" (0.25), -0
0.47"-0.98" (12-25)	+0.012" (0.30), -0
0.98"-1.97" (25-50)	+0.016" (0.40), -0

CLASSIFICATION 形状区分	
1	
2	
3	
4	
5	

SCALE 縮尺	NTS
MATERIAL 材質	
WEIGHT (LBS) 重量(kg)	
SURFACE TREATMENT 表面処理	PAINT 塗装 Yes No

REV.	ECO. NO.	DESCRIPTION 改訂内容	DATE 改訂日付	DRAWN 担当	CHECKED 審査	APP'D 承認
e	09RC1150	ADDED NOTE.	09.4.17	T.K	T.K	K.T
d	06RC2127	REVISED VENDOR DRAWING.	06.12.01	T.K	T.G	K.T
c	06RC1756	REVISED VENDOR DRAWING.	06.09.07	T.K	T.G	K.T
b	06RC1663	REVISED VENDOR DRAWING.	06.06.07	T.K	T.G	K.T
a	06RC0928	REVISED VENDOR DRAWING.	06.01.25	T.K	T.G	K.T

REVISIONS 改訂

生産技術 PRODUCTION ENGINEERING 承認 APPROVED 審査 CHECKED 作成 DRAWN

ASSY WEIGHT : 24.13 LBS Solic MX

2006.04.14 承認 APPROVED K.Kawahara 審査 CHECKED T.Goto 作成 DRAWN T.Kawashima

川崎重工 車両カンパニー KOBE,JAPAN
KAWASAKI HEAVY INDUSTRIES, LTD.
RAILTRAIN STRUCT & CONSTRUCTION ANCHORET COMPANY

TITLE WINDOW PANE-SIDE 側窓ガラス

図番 DRG. NO. 61506-03531e

PROJECT	SYS. CODE	SER. NO.	REVISION
PA-5	431	21	e

61506-03532e

PY-80595-B

GENERAL NOTES	
NOTES	CONTENTS
1	FLATNESS OF 52.33"(W)x 6.50" (D.163mm)

LIST OF MATERIALS

QTY	ITEM	REMARK	FIZAMIC PART NUMBER	DESCRIPTION	MATERIAL / SPECIFICATION	WEIGHT
1	1		PT-80595 P/N 81508-03532	GLAZING	GREY POLYCARBONATE 0.48" THK 50% VLT	7.0 lbs
1	2		PT-51251 P/N 33021-03509	VANDAL FILM	MADICO CLEAR VANDAL SHIELD LCL-600-BFASR, INSIDE	N/A

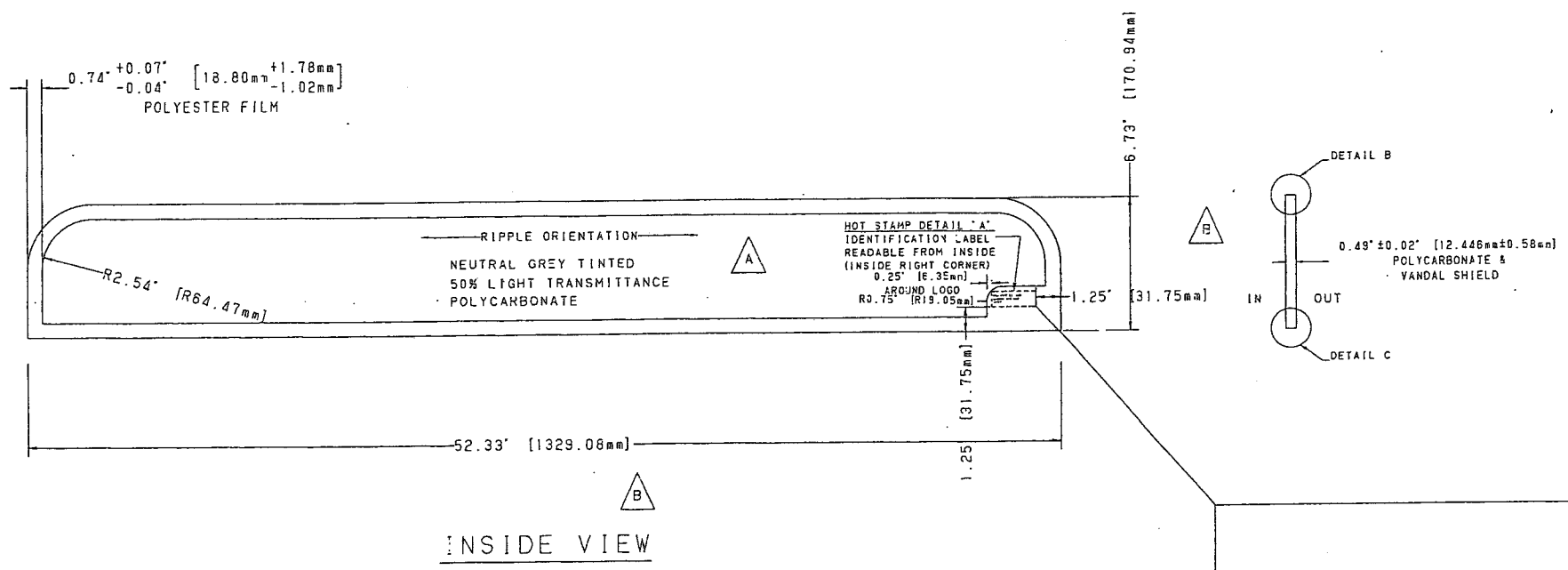

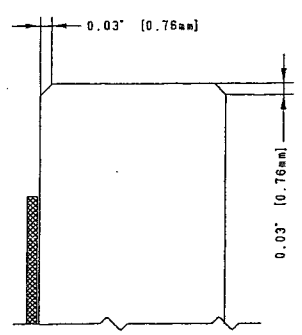

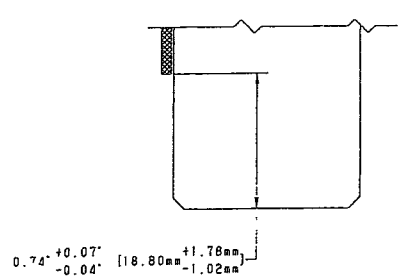

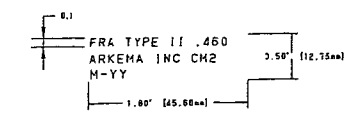

LOGO DETAIL "A"

TOLERANCES		REVISION (Eng.)	DATE		
	A	VLT CHANGED BACK TO 55%	3-11-06	N.L.	
EDGE FLATNESS: 50.163mm	B	DIM & VIEW CORRECTIONS	8-11-06	N.L.	
	C	HOT STAMP DESCRIPTION	24-03-07	N.L.	
	D	VAS CHII	25/06/08	F.B.	

	DATE	
DRAWN	08/02/06	N.L.
CHECKED		
APPROVED		

MATL: Extension Number: NONE

TITLE: SIDE WINDOW LARGE EMERGENCY TOP POLYCARBONATE & VANDAL SHIELD

DRAWING NO.: PY-80595-D

APPLICABLE CAR	SET/CAR	V1/CAR	EFFECTIVITY
A	2	△14.0	ALL CARS
C	2	△14.0	ALL CARS

Subject to the Authority's rights and Allowable Uses granted per Article 105 of the PATH Navy Railcar Procurement Contract (Number 4E00085779), KAWASAKI RAIL CAR, INC. reserves all rights in and to any patents, trademarks, trade secrets and other intellectual property and proprietary information contained in this drawing, which are the property of KAWASAKI RAIL CAR, INC. or its licensees.

UNLESS OTHERWISE SPECIFIED

TOLERANCE OF DIMENSIONS

0.02"-0.12" (0.5- 3)	±0.01" (0.2)
0.12"-0.24" (3- 6)	±0.01" (0.3)
0.24"-1.25" (6- 30)	±0.02" (0.5)
1.25"-4.75" (30- 120)	±0.03" (0.8)
4.75"-12.5" (120- 315)	±0.05" (1.2)
12.5"-40.0" (315-1000)	±0.08" (2.0)
40.0"-80.0" (1000-2000)	±0.12" (3.0)
OVER 80.0" (2000-)	±0.25" (6.0)

ANGLES ±1°

DRILLED HOLE DIA. TOLERANCES

0.12"-0.24" (3- 6)	+0.006" (0.15), -0
0.24"-0.47" (6-12)	+0.010" (0.25), -0
0.47"-0.98" (12-25)	+0.012" (0.30), -0
0.98"-1.97" (25-50)	+0.016" (0.40), -0

CLASSIFICATION 区分区分	
1	
2	
3	
4	
5	

SCALE 縮尺	NTS
MATERIAL 材質	
WEIGHT (LBS) 重量(kg)	
SURFACE TREATMENT 表面処理	PAINT 塗装 Yes (No)

REV.	ECO. NO.	DESCRIPTION	DATE	DRAWN	CHECKED	APP'D
e	11RC0857	REMOVED INTELLECTUAL PROPERTY RIGHTS STATEMENT.	'11.8.4	K.M.	K.A.	OK
d	10RC1158	REVISED VENDOR DRAWING	10.05.14	K.O.	K.Y.	K.K.
c	06RC2127	REVISED VENDOR DRAWING	06.12.01	T.K.	T.G.	K.I.
b	06RC1750	REVISED VENDOR DRAWING	06.09.01	T.K.	T.G.	K.I.
a	06RC1663	REVISED VENDOR DRAWING	06.03.03	T.K.	T.G.	K.I.

REVISIONS 改訂

2006.04.14

KAWASAKI HEAVY INDUSTRIES, LTD. 川崎重工 車両カンパニー KOBE, JAPAN

RAILWAY SYSTEMS & CONSTRUCTION MACHINERY COMPANY

TITLE: WINDOW PANE-SIDE 側窓ガラス

DRAWN: K.Kawashima

DRG. NO. 61506-03532 e

SHEET 1/1

PRODUCTION ENGINEERING

ASSY WEIGHT : 7.00 LBS Solid MX

PROJECT	SYS. CODE	SER. NO.	REVISION
FA-5	431	122	e

61506-03532e

PY-80595-B

GENERAL NOTES	
NOTES	CONTENTS
1	FLATNESS OF 52.33/1000= 0.52" (0.763mm)

LIST OF MATERIALS

QTY	ITEM	REMARK	PYEAHIC PART NUMBER	DESCRIPTION	MATERIAL / SPECIFICATION	WEIGHT
1	1		PT-80595 P/N 61506-03532	GLAZING	GREY POLYCARBONATE 0.46" THK 50% VLT	7.0 lbs
1	2		PT-51451 P/N 33031-03509	VANDAL FILM	MADICO CLEAR VANDAL SHIELD LCL-600-BFXSR, INSIDE	N/A

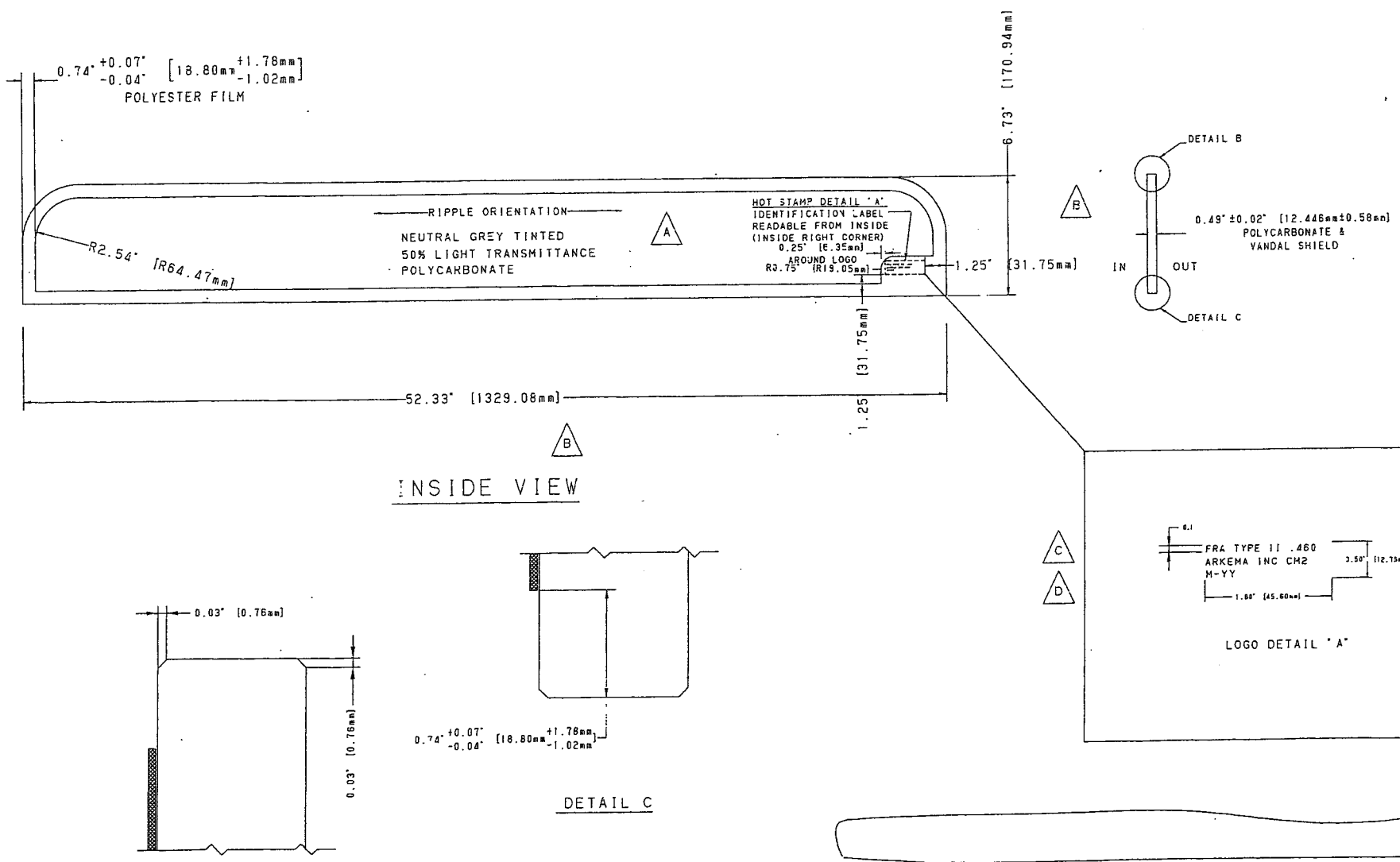

TOLERANCES								
	A	YLT CHANGED BACK TO 50%	3-1"-06	N.L.				
	B	DIM & VIEW CORRECTIONS	9-"1-06	N.L.				
	C	HOT STAMP DESCRIPTION	14-03-07	N.L.		DATE		
	D	VAS CHII	25/08/08	F.B.		06/02/08	K.L.	

SIDE WINDOW LARGE EMERGENCY TOP POLYCARBONATE & VANDAL SHIELD

PY-80595-D

APPLICABLE CAR	SET/CAR	V1/CAR	EFFECTIVITY
A	2	△14.E	ALL CARS
C	2	△4.B	ALL CARS

Subject to the Authority's rights and Allowable Uses granted per Article 105 of the PATH Rail Car Procurement Contract (Number AE00005779), KAWASAKI RAIL CAR, INC. reserves all rights in and to any patents, trademarks, trade secrets and other intellectual property and proprietary information contained in this drawing, which are the property of KAWASAKI RAIL CAR, INC. or its licensees.

UNLESS OTHERWISE SPECIFIED

TOLERANCE OF DIMENSIONS

0.02"-0.12" (0.5- 3)	±0.01" (0.2)
0.12"-0.24" (3- 6)	±0.01" (0.3)
0.24"-1.97" (6- 50)	±0.02" (0.5)
1.97"-4.72" (50- 120)	±0.03" (0.8)
4.72"-12.6" (120- 315)	±0.05" (1.3)
12.6"-40.2" (315-1000)	±0.08" (2.0)
40.2"-80.0" (1000-2000)	±0.12" (3.0)
OVER 80.0" (2000-)	±0.25" (6.0)

ANGLES ±1°

DRILLED HOLE DIA. TOLERANCES

0.12"-0.24" (3- 6)	-0.006" (0.15), -0
0.24"-0.47" (6-12)	+0.010" (0.25), -0
0.47"-0.98" (12-25)	+0.012" (0.30), -0
0.98"-1.97" (25-50)	+0.016" (0.40), -0

CLASSIFICATION 分類区分	
1	
2	
3	
4	
5	

SCALE 縮尺	NTS
MATERIAL 材質	
WEIGHT (LBS) 重量(kg)	
SURFACE TREATMENT 表面処理	PAINT 色番 Yes (No)

REV.	ECO. NO.	DESCRIPTION	DATE	DRAWN	CHECKED	APP'D
e	11RC0857	REMOVED INTELLECTUAL PROPERTY RIGHTS STATEMENT.	'11.8.4	K.M.	K.M.	中K
d	10RC1158	REVISED VENDOR DRAWING	10.05.10	K.O	K.Y	H.K
c	06RC2127	REVISED VENDOR DRAWING	06.12.01	T.K	T.G	K.T
b	06RC1750	REVISED VENDOR DRAWING	06.09.07	T.K	T.G	K.T
a	06RC1663	REVISED VENDOR DRAWING	06.08.09	T.K	T.G	K.T

REVISIONS 改訂

承認 APPROVED	2006.04.14
審査 CHECKED	K.Sakahara
作図 DRAWN	T.Ito / T.Kawashima

川崎重工 車両カンパニー KOBE JAPAN
KAWASAKI HEAVY INDUSTRIES, LTD.
ROLLING STOCK & CONSTRUCTION DIV. KOBE COMPANY

SATTILE

WINDOW PANE-SIDE
側窓ガラス

図面番 DRG. NO. | 代替図番 DRG. NO.

図番 DRG. NO. 61506-03532 e

PROJECT	SYS. CODE	SER. NO.	REVISION
FA-5	431	122	e

SHEET 1/1

生産技術 PRODUCTION ENGINEERING
承認 APPROVED | 審査 CHECKED | 作図 DRAWN

ASSY WEIGHT : 7.00 LBS
Solid M3

61602-03512d

LIST OF MATERIALS						
QTY	ITEM	REMARK	PYRAMID PART NUMBER	DESCRIPTION	MATERIAL / SPECIFICATION	WEIGHT
1	1		PY-80589 F/W 61602-03512	HEATED GLASS	CLEAR LAMINATED HEATED SAFETY GLASS 0.62" + DUPONT SPALLSHIELD 82% VLT	41.5 Lbs

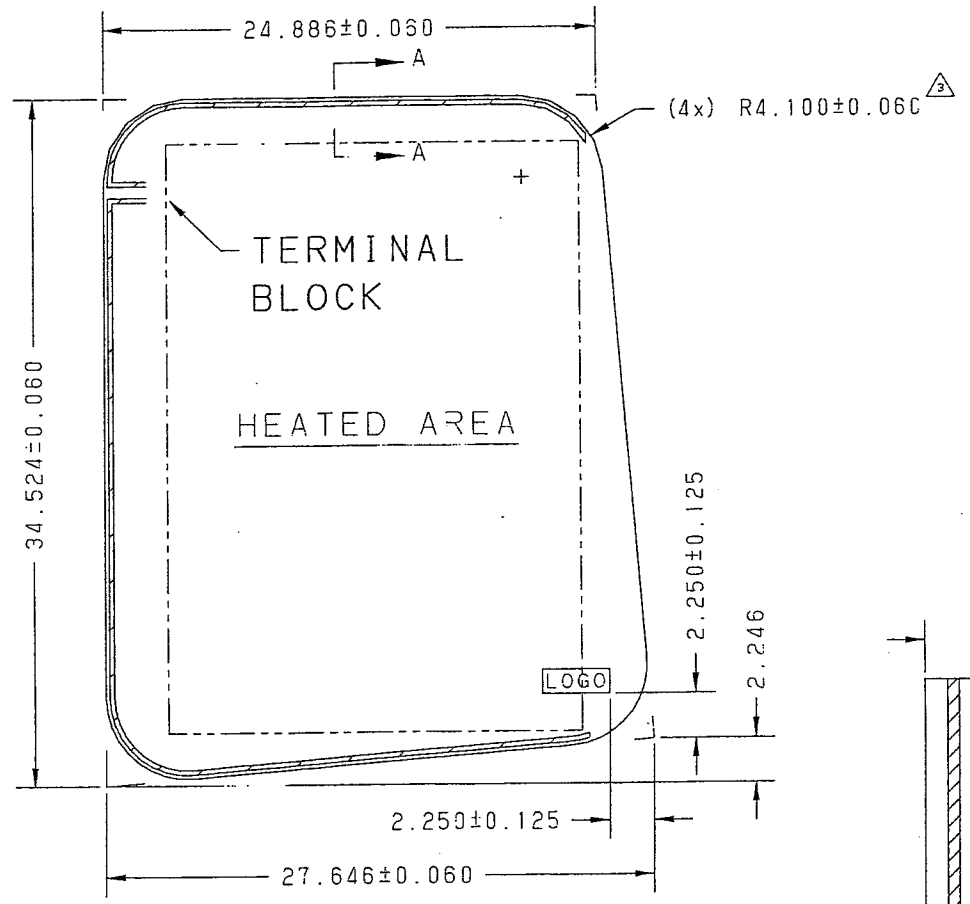

INTERIOR VIEW

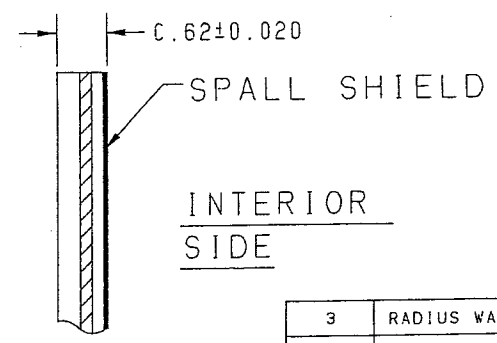

SECTION A-A
NO SCALE

NOTES:
1. CLEAR LAMINATED SAFETY GLASS WITH DU PONT 307 SPALL SHIELD ON INTERIOR.

2. ALL EDGES TO BE CONDITIONED FOR SAFE HANDLING.

3. FLATNESS SHALL BE LESS THAN 0.030 INCH PER LINEAR FOOT.

4. OVERLAP SHALL NOT EXCEED 1/16 INCH.

5. ELECTRICAL CHARACTERISTICS:
   VOLTAGE: 37.5 VDC
   SPECIFIC POWER: 0.50 W/SQ. IN ±20%
   RESISTANCE: 4.55 OHMS ±20%
   CURRENT: 8.23 AMPS ±20%
   POWER: 309 WATTS
   HEATED AREA: 618 SQ. IN

6. APPROX. WEIGHT: 41.5 LBS

7. VISIBLE LIGHT TRANSMISSION: 82% ±4%

NASG
NORTH AMERICAN SPECIALTY GLASS

FRA Type I
AS 1 DOT 103 SNP-16BH
Year.....
This Side In

LOGO DETAIL
SCALE: NONE
READABLE TO INTERIOR

REVISION NUMBER	DESCRIPTION	DATE	DRAWN BY
3	RADIUS WAS 3.956	2/20/07	P. X.
2	REVISED PER LETTER No. PATH-KRC-80194	8/2/06	P. X.
1	MIRRORED IMAGE	5/1/06	P. X.

DRAWN BY: P. X.
CHECKED BY:
APPROVED BY:
DATE: 3/29/06
SCALE: NONE

TOLERANCES:
1 PLC DECIMALS ±.06
2 PLC DECIMALS ±.06
ANGLES ±
FRACTIONS ±
DIMENSIONS ARE IN INCH
DO NOT SCALE DRAWING

NASG
NORTH AMERICAN SPECIALTY GLASS
PITTSBURGH ROAD P.O. BOX 70
TRUMBAUERSVILLE, PENNA. 18970-0070
PHONE: (215) 536-0333 FAX: (215) 536-2025

TITLE: KAWASAKI CAB WINDSHIELD GLASS

DRAWING NUMBER (SHOWN): 80589-C
DRAWING NUMBER (OPP. HAND): PAGE 1 OF 2

CUSTOMER DWG. REV

NOTICE

APPLICABLE CAR	SET/CAR	WT/CAR	EFFECTIVITY
A	1	41.5	ALL CARS
C			

Subject to the Authority's rights and Allowable Uses granted per Article 105 of the PATH Rail Car Procurement Contract (Number 4600005779), KAWASAKI RAIL CAR, INC. reserves all rights in and to any patents, trademarks, trade secrets and other intellectual property and proprietary information contained in this drawing, which are the property of KAWASAKI RAIL CAR, INC. or its licensees.

UNLESS OTHERWISE SPECIFIED
TOLERANCE OF DIMENSIONS
0.00" ~ 0.12" (0.5~ 3) ±0.01" (0.2)
0.13" ~ 0.24" (3~ 6) ±0.01" (0.3)
0.24" ~ 1.28" (6~ 30) ±0.02" (0.5)
1.28" ~ 4.72" (30~ 120) ±0.03" (0.8)
4.72" ~ 12.6" (120~ 315) ±0.05" (1.2)
12.6" ~ 40.0" (315~1000) ±0.08" (2.0)
40.0" ~ 80.0" (1000~2000) ±0.12" (3.0)
OVER 80.0" (2000~) ±0.25" (6.0)
ANGLES ±1°
DRILLED HOLE DIA. TOLERANCES
0.12"~0.24" (3~ 6) +0.005" (0.13) -0
0.24"~0.47" (6~12) +0.010" (0.25) -0
0.47"~0.98" (12~25) +0.015" (0.38) -0
0.98"~1.97" (25~50) +0.015" (0.40) -0

CLASSIFICATION 部位区分	
1	
2	
3	
4	
5	

SCALE 縮尺: NTS
MATERIAL 材質
WEIGHT (LBS) 重量(kg)
SURFACE TREATMENT 表面処理
PAINT 塗装 Yes No

REV. 改正日付	ECO. NO. 変更番号	DESCRIPTION 改正内容	DATE 改正日付	DRAWN 担当	CHECKED 検図	APP'D 承認
d	10RC0005	SCLEED INTELLECTUAL PROPERTY RIGHTS STATEMENT.	10.01.06	T.G	T.G	K.M
c	07RC0733	REVISED VENDOR DRAWING	07.05.03	T.K	T.G	K.T
b	06RC1750	REVISED VENDOR DRAWING	06.09.07	T.K	T.G	K.T
a	06RC1663	REVISED VENDOR DRAWING	06.07.30	T.K	T.G	K.T

REVISIONS 改訂

2006-04-25
承認 APPROVED: K. Inukai
検図 CHECKED: T. Sato
作図 DRAWN: T. Kawashima

川崎重工 車両カンパニー KOBE,JAPAN
KAWASAKI HEAVY INDUSTRIES, LTD.
RAIL CARS & CONSTRUCTION MACHINERY COMPANY

名称 TITLE: WINDSHIELD-CAB END
運転室前面窓ガラス

図番 DRG. NO. 61602-03512(d)
SCALE 1/1

ASSY WEIGHT : 41.50 LBS
Solid MX

PROJECT	SYS. CODE	SUB. NO.	REVISION
PA-5	431	142	d

61602-03512d

LIST OF MATERIALS						
QTY	ITEM	REMARK	PYRAMID PART NUMBER	DESCRIPTION	MATERIAL / SPECIFICATION	WEIGHT
1	1	.	PY-80589 F/N 61602-03512	HEATED GLASS	CLEAR LAMINATED HEATED SAFETY GLASS 0.62" W DUPONT SPALLSHIELD 82% VLT	41.5 Lbs

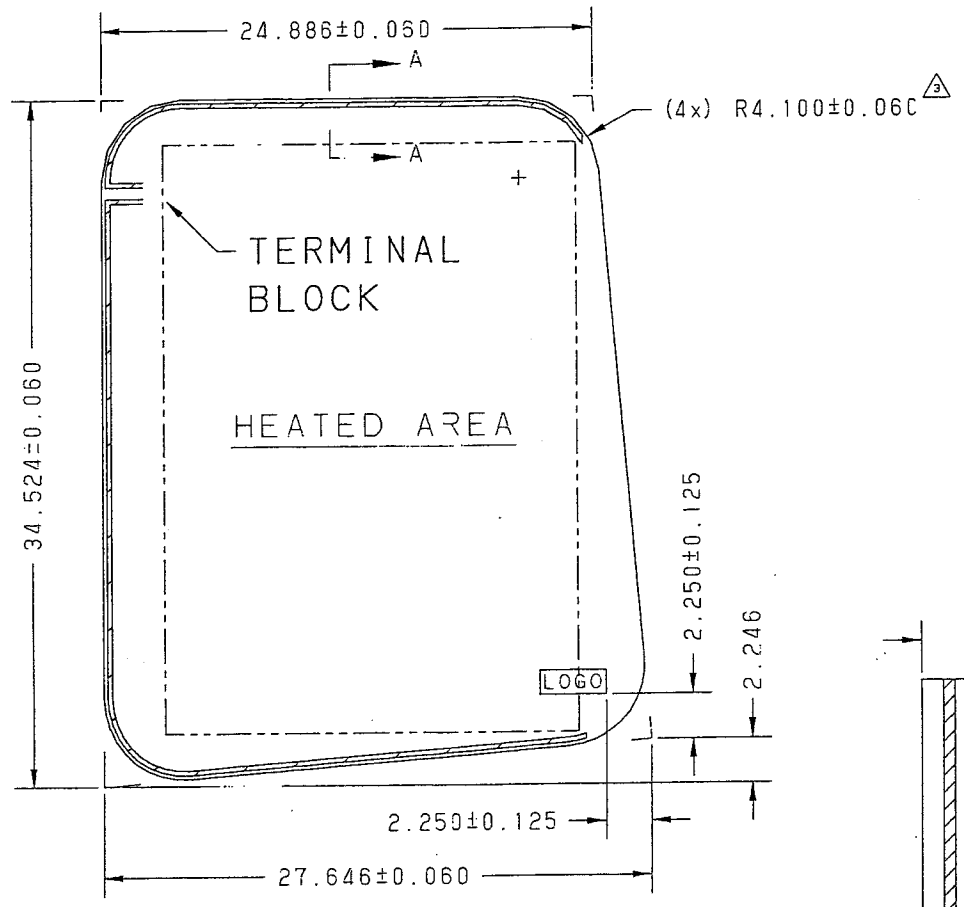

INTERIOR VIEW

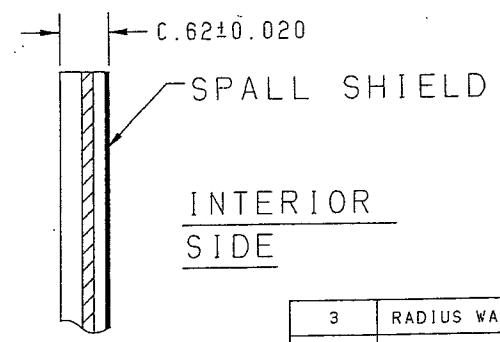

SECTION A-A
NO SCALE

NOTES:
1. CLEAR LAMINATED SAFETY GLASS WITH DU PONT 307 SPALL SHIELD ON INTERIOR.
2. ALL EDGES TO BE CONDITIONED FOR SAFE HANDLING.
3. FLATNESS SHALL BE LESS THAN 0.030 INCH PER LINEAR FOOT.
4. OVERLAP SHALL NOT EXCEED 1/16 INCH.
5. ELECTRICAL CHARACTERISTICS:
   VOLTAGE: 37.5 VDC
   SPECIFIC POWER: 0.50 W/SQ.IN ±20%
   RESISTANCE: 4.55 OHMS ±20%
   CURRENT: 8.23 AMPS ±20%
   POWER: 309 WATTS
   HEATED AREA: 618 SQ.IN
6. APPROX. WEIGHT: 41.5 LBS
7. 2 VISIBLE LIGHT TRANSMISSION: 82% ±4%

NASG
NORTH AMERICAN SPECIALTY GLASS

FRA Type I
AS 1 DOT 103 SNP-16BH
Year.....
This Side In

LOGO DETAIL
SCALE: NONE
READABLE TO INTERIOR

REVISION NUMBER	DESCRIPTION	DATE	DRAWN BY
3	RADIUS WAS 3.956	2/20/07	P. X.
2	REVISED PER LETTER No. PATH-KRC-80194	8/2/06	P. X.
1	MIRRORED IMAGE	5/1/06	P. X.

DRAWN BY: P. X.
CHECKED BY:
APPROVED BY:
DATE: 3/29/06
SCALE: NONE

TOLERANCES:
1 PLC DECIMALS ±.06
2 PLC DECIMALS ±.06
ANGLES ±
FRACTIONS ±
DIMENSIONS ARE IN INCH
DO NOT SCALE DRAWING

TITLE: KAWASAKI CAB WINDSHIELD GLASS

NASG
NORTH AMERICAN SPECIALTY GLASS
2175 KUHRY ROAD P.O. BOX 70
TRUMBAUERSVILLE, PENNA. 18970-0070
PHONE: (215) 536-0333 FAX: (215) 536-2025

DRAWING NUMBER (SHOWN): 80589-C
DRAWING NUMBER (OPP. HAND): PAGE 1 OF 2

CUSTOMER DWG. REV

NOTICE

APPLICABLE CAR	SET/CAR	VT/CAR	EFFECTIVITY
A	1	41.5	ALL CARS
C			

Subject to the Authority's rights and allowable uses granted per Article 105 of the FAST Joint Railcar Procurement Contract (Number A600095739), KAWASAKI RAIL CAR, INC. reserves all rights in and to any patents, trademarks, trade secrets and other intellectual property and proprietary information contained in this drawing, which are the property of KAWASAKI RAIL CAR, INC. or its licensees.

UNLESS OTHERWISE SPECIFIED
TOLERANCE OF DIMENSIONS
0.02" 0.12" (0.5- 3) ±0.01" (0.2)
0.12"-0.24" (3- 6) ±0.01" (0.3)
0.24"-1.28" (6- 30) ±0.02" (0.5)
1.28"-4.76" (30- 120) ±0.03" (0.8)
4.76"-12.5" (120- 315) ±0.05" (1.3)
12.5"-40.0" (315-1000) ±0.08" (2.0)
40.0"-80.0" (1000-2000) ±0.12" (3.0)
OVER 80.0" (2000-) ±0.25" (6.0)
ANGLES ±1°
DRILLED HOLE DIA. TOLERANCES
0.12"-0.24" (3- 6) +0.005" (0.15), -0
0.24"-0.47" (6-12) +0.010" (0.25), -0
0.47"-0.98" (12-25) +0.012" (0.30), -0
0.98"-1.97" (25-50) +0.015" (0.40), -0

CLASSIFICATION 等級区分	
1	
2	
3	
4	
5	

SCALE 縮尺	NTS
MATERIAL 材質	
WEIGHT (LBS) 重量(kg)	
SURFACE TREATMENT 表面処理	PAINT 塗装 Yes No

REV.	ECO. NO. 若番号	DESCRIPTION 改訂内容	DATE 改訂日付	DRAWN 担当	CHECKED 審査	APP'D 承認
d	10RC0003	DELETED INTELLECTUAL PROPERTY RIGHTS STATEMENT.	10.01.08	T.G	T.G	K.M
c	07RC0733	REVISED VENDOR DRAWING.	07.05.03	T.K	T.G	K.I
b	06RC1750	REVISED VENDOR DRAWING.	06.09.07	T.K	T.G	K.I
a	06RC1663	REVISED VENDOR DRAWING.	06.07.30	T.K	T.G	K.I

REVISIONS 改訂

2006.04.25
承認 APPROVED K.Inokuchi
審査 CHECKED T.Gato
作成 DRAWN T.Kawashima

川崎重工 車両カンパニー KOBE, JAPAN
KAWASAKI HEAVY INDUSTRIES, LTD.
RAILWAY STAGE 1 CONSTRUCTION MANAGEMENT COMPANY

名称 TITLE: WINDSHIELD-CAB END
運転室前面窓ガラス

元図番 ORIG. DRG. NO.
61602-03512(d)
原図番 ORIG. NO.
SHEET 1/1

ASSY WEIGHT : 41.50 LBS
Solid WT

PROJECT	SYS. CODE	SUB. NO.	REVISION
PA-5	431	142	d

62204-035086

GENERAL NOTES	
NOTES	CONTENTS
1	FLATNESS OF 36.48"max (0.927 mm)

LIST OF MATERIALS

QTY	ITEM	REMARK	PYRAMID PART NUMBER	DESCRIPTION	MATERIAL / SPECIFICATION	WEIGHT
1	1		PY-80592 P/K 522C4-03598	GLAZING	CLEAR POLYCARBONATE 0.48" THK. W/TH 85% VLT	12.7 Lbs.
1	2		PY-51485 P/K 33031-03515	VANDAL FILM	MADICO CLEAR VANDAL SHIELD ECL-660-BF15R. INSIDE	N/A

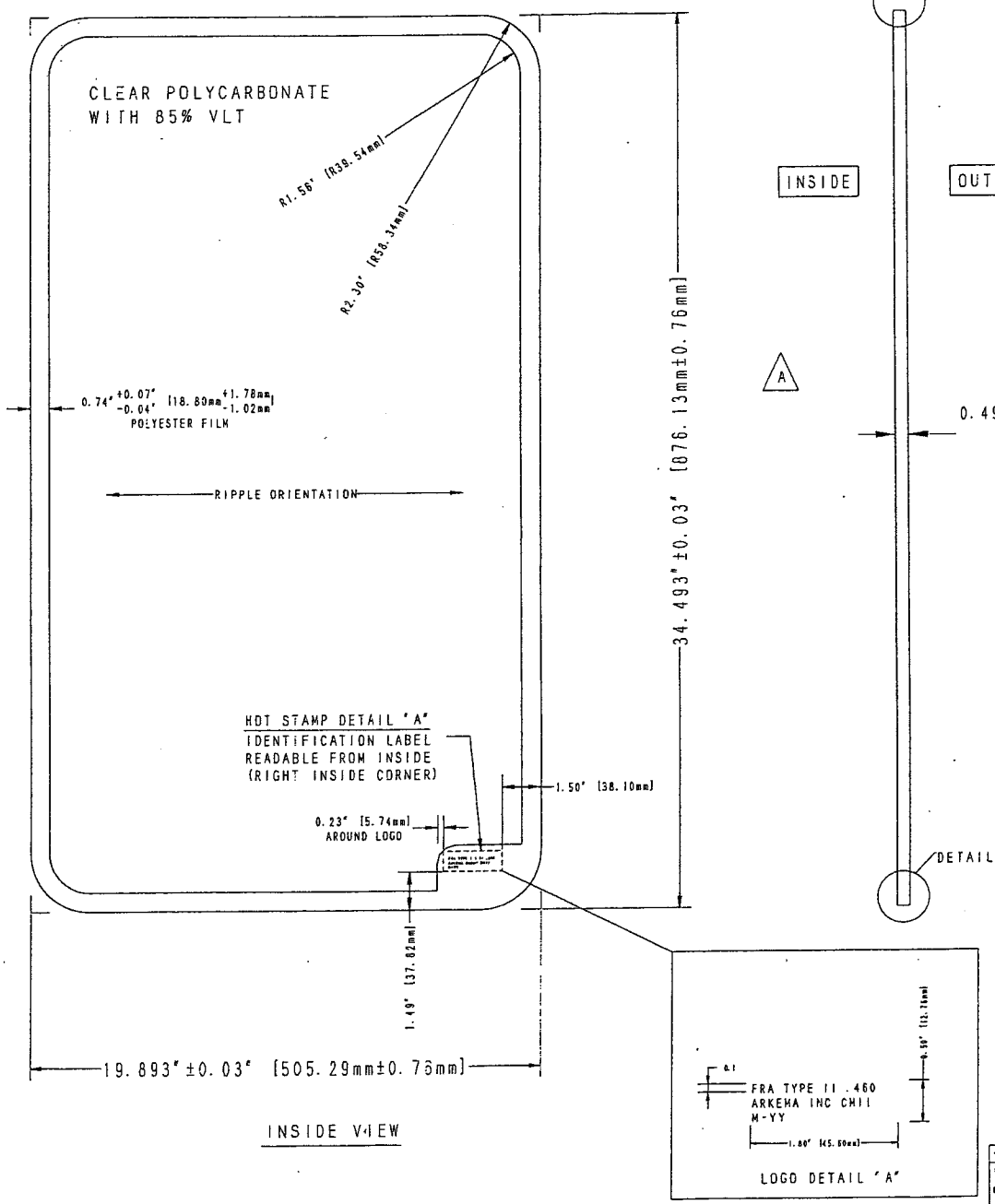

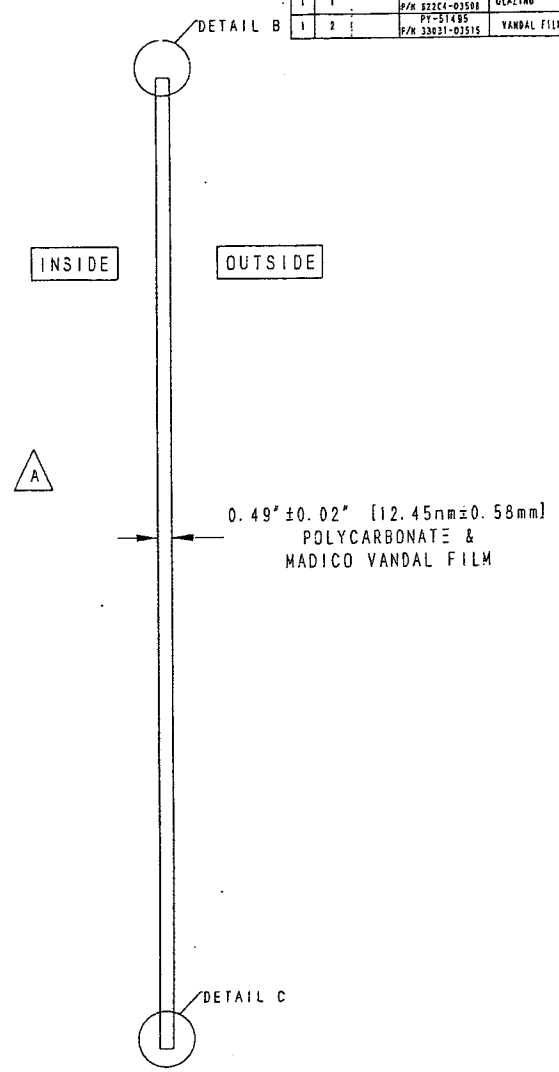

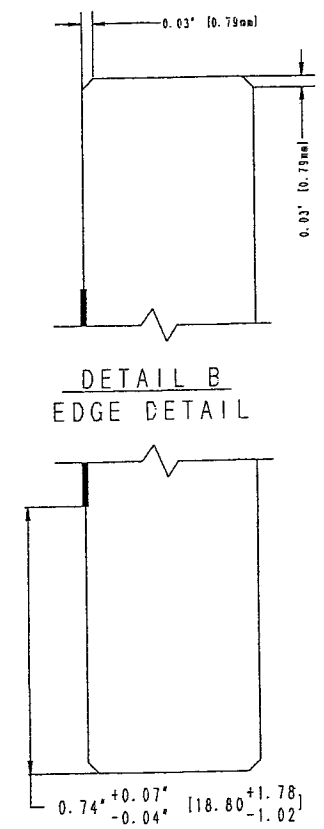

TOLERANCES	NO.	REVISION (Comm.)	DATE	PAR BY
Unless otherwise noted: GENERAL TOLERANCES BS 953	A	SIZE CHANGED TO ORIGINAL SPEC	23-01-07	NL
	B	DIM WAS MOVED	12-04-07	NL
SURFACE DUROCASS AS PER A S A V				

NASG NORTH AMERICAN SPECIALTY GLASS

	DATE	PAR BY
DESIGNED DRAWN	01/03/06	NL
APPROVED APP'D.		

Bonding Status: NONE

TITRE/TITLE: END DOOR WINDOW
POLYCARBONATE & VANDAL SHIELD / PROJECT PATH

DESIGN/PRG. NO : PY-80592-B

APPLICABLE CAR	SET/CAR	WT/CAR	EFFECTIVITY
A	1	△1 12.7	ALL CARS
C	2	△1 25.4	ALL CARS

Subject to the Authority's rights and Allowable Uses granted per Article 105 of the PATH New Railcar Procurement Contract (Number 4500405751). KAWASAKI RAIL CAR, INC. reserves all rights in and to any patents, trademarks, trade secrets and other intel

UNLESS OTHERWISE SPECIFIED
TOLERANCE OF DIMENSIONS
0.02"~0.12" (0.5~ 3) ±0.005" (0.13)
0.12"~0.24" (3~ 6) ±0.01" (0.3)
0.24"~1.20" (6~ 30) ±0.02" (0.5)
1.20"~4.70" (30~ 120) ±0.03" (0.8)
4.70"~12.5" (120~ 315) ±0.05" (1.3)
12.5"~40.0" (315~1000) ±0.08" (2.0)
40.0"~80.0" (1000~2000) ±0.12" (3.0)
OVER 80.0" (2000~) ±0.25" (6.0)
ANGLES ±1°
DRILLED HOLE DIA. TOLERANCES
0.137"~0.24" (3~ 6) +0.005" (0.13) -0
0.24"~0.47" (6~12) +0.010" (0.25) -0
0.47"~0.98" (12~25) +0.013" (0.30) -0
0.98"~1.97" (25~50) +0.018" (0.40) -0

CLASSIFICATION 形状区分	
1	
2	
3	
4	
5	

SCALE 縮尺	NTS
MATERIAL 材質	
WEIGHT (LBS) 重量(kg)	
SURFACE TREATMENT 表面処理	PAINT 塗装 Yes No

REV.	ECO. NO.	DESCRIPTION	DATE	DRAWN	CHECKED	APP'D
b	07RC0588	REVISED VENDOR DRAWING.	07.04.19	T.K	T.G	T.S
a	06RC1750	REVISED VENDOR DRAWING.	06.08.07	T.K	T.G	K.I

REVISIONS

2006-04-14

川崎重工 車両カンパニー KOBE, JAPAN
KAWASAKI HEAVY INDUSTRIES, LTD.
RAILWAY COACH & CONSTRUCTION DEPARTMENT

TITLE: WINDOW PANE-END SLIDING DOOR
妻引戸窓ガラス

DRG. NO. 62204-035086 (b)

PROJECT	SYS. CODE	SER. NO.	REVISION
PA-5	431	'64	b

ASS'Y WEIGHT : 12.70 LBS
5.6115 KG

62204-03508b

PY-80592-A

GENERAL NOTES	
NOTES	CONTENTS
1	[illegible]

LIST OF MATERIALS

QTY	ITEM	REMARK	PYRAMID PAR™ NUMBER	DESCRIPTION	MATERIAL / SPECIFICATION	WEIGHT
1	1		PY-80592 P/N 62204-03508	GLAZING	CLEAR POLYCARBONATE 0.48" THK. W TH 85% VLT	12.7 Lbs.
1	2		PY-51485 P/N 33031-03515	VANDAL FILM	MADICO CLEAR VANDAL SHIELD LCL-600-8F(SR. INSIDE	N/A

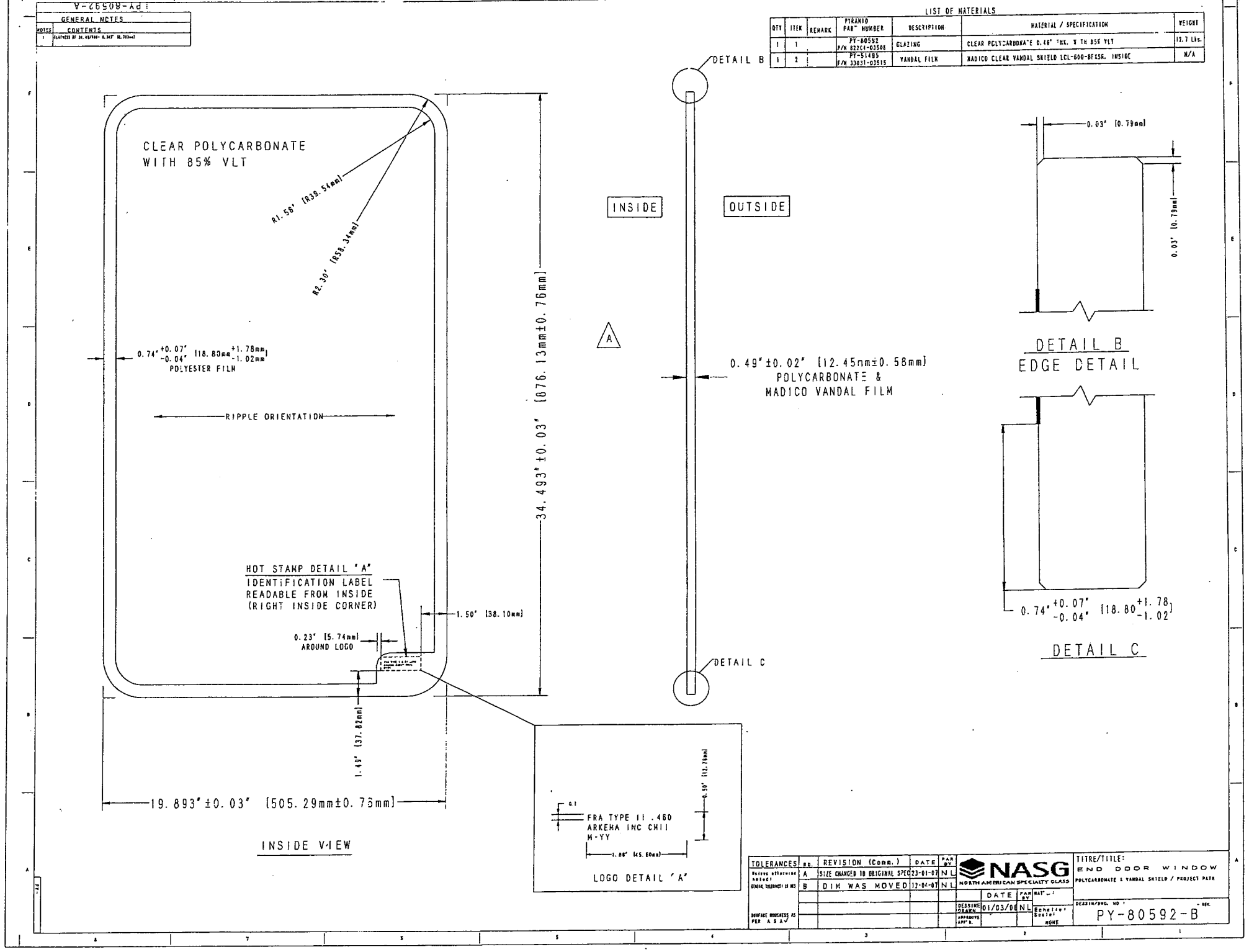

TOLERANCES	REVISION (Comm.)	DATE	PAR BY
Unless otherwise noted: GENERAL TOLERANCE (±0.03)	A SIZE CHANGED TO ORIGINAL SPEC	03-01-07	NL
	B DIM WAS MOVED	12-04-07	NL
SURFACE ROUGHNESS AS PER A.S.A.V			

NASG NORTH AMERICAN SPECIALTY GLASS

	DATE	PAR BY
DESIGNED/DRAWN	01/03/06	NL
APPROVED/APP'D.		

SCALE: NONE

TITRE/TITLE: END DOOR WINDOW

POLYCARBONATE & VANDAL SHIELD / PROJECT PAR

DESIGN/DWG. NO.: PY-80592-B

APPLICABLE CAR	SET/CAR	WT/CAR	EFFECTIVITY
A	1	12.7	ALL CARS
C	2	25.4	ALL CARS

Subject to the Authority's rights and Allowable Uses granted per Article 105 of the PATH New Railcar Procurement Contract (Number 4500005795). KAWASAKI RAIL CAR, INC. reserves all rights in and to any patents, trademarks, trade secrets and other intel

UNLESS OTHERWISE SPECIFIED

TOLERANCE OF DIMENSIONS

0.02"-0.12" (0 5- 3)	±0.01" (0.2)
0.12"-0.24" (3- 6)	±0.01" (0.3)
0.24"-1.39" (6- 35)	±0.02" (0.5)
1.39"-4.76" (35- 120)	±0.03" (0.8)
4.76"-12.6" (120- 320)	±0.05" (1.3)
12.6"-40.0" (320-1000)	±0.08" (2.0)
40.0"-80.0" (1000-2000)	±0.12" (3.0)
OVER 80.0" (2000-)	±0.25" (6.0)

ANGLES ±1°

DRILLED HOLE DIA. TOLERANCES

0.12"-0.24" (3- 6)	+0.005" (0.13) -0
0.24"-0.47" (6-12)	+0.010" (0.25) -0
0.47"-0.98" (12-25)	+0.012" (0.30) -0
0.98"-1.97" (25-50)	+0.016" (0.40) -0

CLASSIFICATION 形状区分	
1	
2	
3	
4	
5	

SCALE 縮尺: NTS

MATERIAL 材質

WEIGHT (LBS) 重量(kg)

SURFACE TREATMENT 表面処理

PAINT 塗装 Yes

REV. 改訂記号	ECO. NO. 変更指示書 NO.	DESCRIPTION 改訂内容	DATE 改訂日付	DRAWN 担当	CHECKED 審査	APP'D 承認
b	07RC0588	REVISED VENDOR DRAWING.	07.04.19	T.K	T.G	T.S
a	06RC1750	REVISED VENDOR DRAWING.	06.08.07	T.K	T.G	K.I

REVISIONS 改訂

生産技術 PRODUCTION ENGINEERING: 承認 APPROVED / 審査 CHECKED / 作成 DRAWN

ASS'Y WEIGHT : 12.70 LBS Sa113 X3

2006-04-14

承認 APPROVED: K.Sakahara

審査 CHECKED: T.Sato

作成 DRAWN: T.Kanehima

川崎重工 事業カンパニー KOBE,JAPAN
KAWASAKI HEAVY INDUSTRIES,LTD.
RAILWAY STRUCT & CONSTRUCTION FACTORY COMPANY

名称 TITLE: WINDOW PANE-END SLIDING DOOR
妻引戸窓ガラス

元図番 DRWG. DRG. NO.

仕様番 DRG. NO.

図番 DWG. NO.: 62204-03508 (b)

REVISION SHEET: 1/

PROJECT	SYS. CODE	SER. NO.	REVISION
PA-5	431	64	b