NOTES:

1. FOR FINISHED GRADE ELEVATION REQUIREMENTS, SEE CIVIL TECHNICAL PARAMETERS TP–03.
2. ALL STRUCTURAL WORK SHALL MEET THE REQUIREMENTS OF STRUCTURAL TECHNICAL PARAMETERS TP–02.
3. REPLACE OR STRENGTHEN THE CORBELS SUPPORTING THE REINFORCED CONCRETE STRUCTURAL SLAB AS REQUIRED TO MEET DESIGN PARAMETERS FOR REINFORCED CONCRETE STRUCTURAL SLAB OR IF A THICKER SLAB IS REQUIRED.
4. WHEN THE CONTRACTOR ELECTS TO INSTALL TREADLES AND/OR LOOPS IN THE LANE WITHIN THE LIMITS OF THE TUNNEL, A FULL DEPTH REPLACEMENT OF THE REINFORCED CONCRETE TUNNEL ROOF SLAB IS REQUIRED IF ANY PORTION OF THE TREADLES AND/OR LOOPS ARE INSTALLED INSIDE THE TUNNEL ROOF SLAB.
5. TEMPORARILY SUPPORT AND SHIELD ALL UTILITIES BEFORE PERFORMING FULL DEPTH REPLACEMENT OF THE REINFORCED CONCRETE TUNNEL ROOF SLAB.
6. WHEN THE CONTRACTOR ELECTS TO INSTALL TREADLES AND/OR LOOPS IN THE LANE WITHIN THE LIMITS OF THE TUNNEL, A FULL DEPTH REPLACEMENT OF THE REINFORCED CONCRETE TUNNEL ROOF SLAB IS NOT REQUIRED WHERE OVERLAY HAS ADEQUATE THICKNESS FOR THE TREADLES AND/OR LOOPS (DEVICES) TO BE INSTALLED ENTIRELY WITHIN AN OVERLAY SUCH THAT SAWCUT DEPTHS FOR SAID DEVICES CLEAR THE TOP OF THE TUNNEL ROOF SLAB BY 1 INCH MINIMUM.
7. THE EXISTING OVERLAY THICKNESS VARIES. FOR DETAILED INFORMATION ON EXISTING OVERLAY THICKNESS, SEE CORE DATA PROFILE IN REFERENCE DRAWINGS. PERFORM ALL OVERLAY REMOVAL AND INSTALLATION OPERATIONS WITHOUT CAUSING DAMAGE TO THE UNDERLYING TUNNEL ROOF SLAB. 1
8. EXISTING UTILITIES AND CONDUITS ATTACHED TO REINFORCED CONCRETE TUNNEL ROOF SLAB ARE SHOWN FOR REPRESENTATIVE (SCHEMATIC) PURPOSES ONLY. FOR DETAILED INFORMATION ON EXISTING UTILITIES AND CONDUITS, SEE UTILITY SURVEY REFERENCE DRAWINGS.
9. THE EXISTING REINFORCED CONCRETE STRUCTURAL SLAB (WITH OR WITHOUT OVERLAY) THICKNESS VARIES. FOR DETAILED INFORMATION ON EXISTING REINFORCED CONCRETE STRUCTURAL SLAB (WITH OR WITHOUT OVERLAY) TOTAL DEPTH THICKNESS, SEE CORE DATA PROFILE IN REFERENCE DRAWINGS. 1

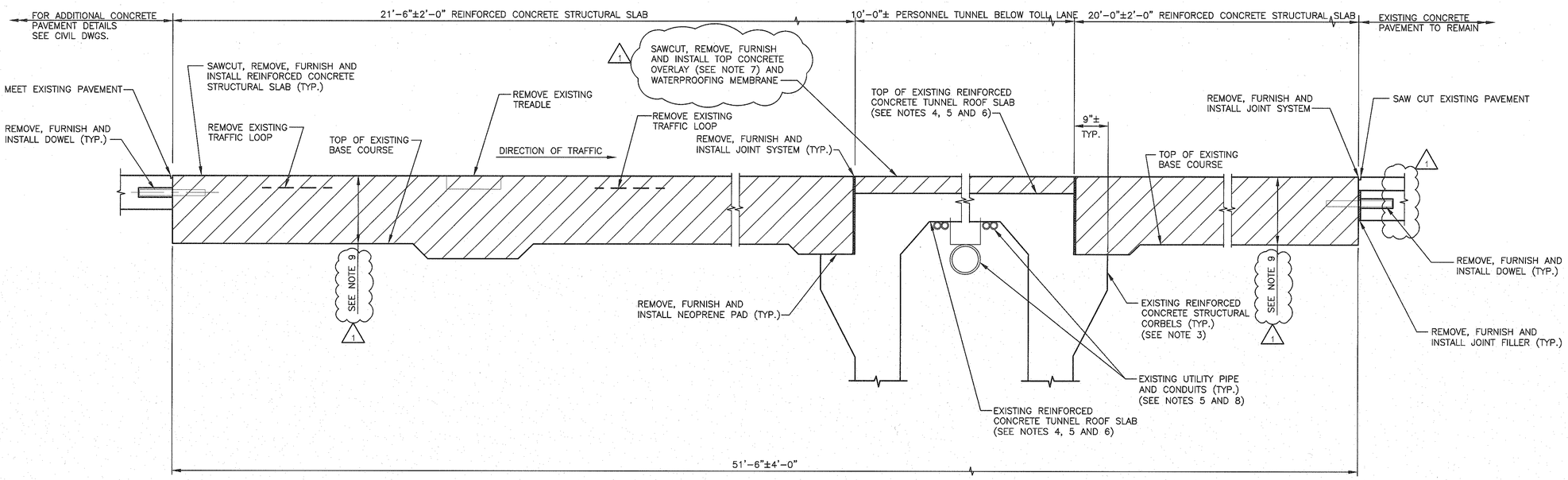

S 1 S201 SECTION AT TOLL LANE SLAB

0 1 2 3
SCALE IN FEET

Sheet 83 of 131

THE PORT AUTHORITY OF NY & NJ

ORIGINAL SIGNED BY
CSABA KERTESZ FOR
CHIEF STRUCTURAL ENGINEER

INFORMATION SHOWN IN THIS DRAWING IS CONCEPTUAL ONLY, AND IS NOT TO BE USED FOR CONSTRUCTION.

No.	Date	Revision	Approved
1	03/05/2015	ADDENDUM #8	R.P.

ENGINEERING DEPARTMENT

MULTI FACILITY

STRUCTURAL

Title
DESIGN AND IMPLEMENTATION OF REPLACEMENT TOLL COLLECTION SYSTEM

OUTERBRIDGE CROSSING TYPICAL TOLL LANE SLAB LONGITUDINAL SECTION

This drawing subject to conditions in contract. All inventions, ideas, designs and methods herein are reserved to Port Authority and may not be used without its written consent. All recipients of Contract documents, including bidders and those who do not bid and their prospective subcontractors and suppliers who may receive all or a part of the Contract documents or copies thereof, shall make every effort to ensure the secure and appropriate disposal of the Contract documents to prevent further disclosure of the information contained in the documents. Secure and appropriate disposal includes methods of document destruction such as shredding or arrangements with refuse handlers that ensure that third persons will not have access to the documents' contents either before, during, or after disposal. Documents may also be returned for disposal purposes to the Contract Desk on the 3rd Floor, 3 Gateway Center, Newark NJ 07102 or the office of the Director of Procurement, Two Montgomery Street, 3rd Floor, Jersey City, NJ 07302.
It is a violation of law for any person to alter a document in any way, unless acting under the direction of a licensed professional engineer or registered architect. If this document bearing the seal of an engineer/architect is altered, the altering engineer/architect shall affix to the document their seal and the notation "altered by" followed by their signature and the date of such alteration, and a specific description of the alteration.

Designed by	W.LAM / R.PANCHALAN
Drawn by	J.VIVAR / J.BLACK
Checked by	J.HO / S.SLOAN
Date	11/05/2014
Contract Number	MF-244.251
Drawing Number	S202

PID# 14463000

NOTES:

1. FOR FINISHED GRADE ELEVATION REQUIREMENTS, SEE CIVIL TECHNICAL PARAMETERS TP–03.
2. ALL STRUCTURAL WORK SHALL MEET THE REQUIREMENTS OF STRUCTURAL TECHNICAL PARAMETERS TP–02.
3. REPLACE OR STRENGTHEN THE CORBELS SUPPORTING THE REINFORCED CONCRETE STRUCTURAL SLAB AS REQUIRED TO MEET DESIGN PARAMETERS FOR REINFORCED CONCRETE STRUCTURAL SLAB OR IF A THICKER SLAB IS REQUIRED.
4. WHEN THE CONTRACTOR ELECTS TO INSTALL TREADLES AND/OR LOOPS IN THE LANE WITHIN THE LIMITS OF THE TUNNEL, A FULL DEPTH REPLACEMENT OF THE REINFORCED CONCRETE TUNNEL ROOF SLAB IS REQUIRED IF ANY PORTION OF THE TREADLES AND/OR LOOPS ARE INSTALLED INSIDE THE TUNNEL ROOF SLAB.
5. TEMPORARILY SUPPORT AND SHIELD ALL UTILITIES BEFORE PERFORMING FULL DEPTH REPLACEMENT OF THE REINFORCED CONCRETE TUNNEL ROOF SLAB.
6. WHEN THE CONTRACTOR ELECTS TO INSTALL TREADLES AND/OR LOOPS IN THE LANE WITHIN THE LIMITS OF THE TUNNEL, A FULL DEPTH REPLACEMENT OF THE REINFORCED CONCRETE TUNNEL ROOF SLAB IS NOT REQUIRED WHERE OVERLAY HAS ADEQUATE THICKNESS FOR THE TREADLES AND/OR LOOPS (DEVICES) TO BE INSTALLED ENTIRELY WITHIN AN OVERLAY SUCH THAT SAWCUT DEPTHS FOR SAID DEVICES CLEAR THE TOP OF THE TUNNEL ROOF SLAB BY 1 INCH MINIMUM.
7. THE EXISTING OVERLAY THICKNESS VARIES. FOR DETAILED INFORMATION ON EXISTING OVERLAY THICKNESS, SEE CORE DATA PROFILE IN REFERENCE DRAWINGS. PERFORM ALL OVERLAY REMOVAL AND INSTALLATION OPERATIONS WITHOUT CAUSING DAMAGE TO THE UNDERLYING TUNNEL ROOF SLAB. (1)
8. EXISTING UTILITIES AND CONDUITS ATTACHED TO REINFORCED CONCRETE TUNNEL ROOF SLAB ARE SHOWN FOR REPRESENTATIVE (SCHEMATIC) PURPOSES ONLY. FOR DETAILED INFORMATION ON EXISTING UTILITIES AND CONDUITS, SEE UTILITY SURVEY REFERENCE DRAWINGS.
9. THE EXISTING REINFORCED CONCRETE STRUCTURAL SLAB (WITH OR WITHOUT OVERLAY) THICKNESS VARIES. FOR DETAILED INFORMATION ON EXISTING REINFORCED CONCRETE STRUCTURAL SLAB (WITH OR WITHOUT OVERLAY) TOTAL DEPTH THICKNESS, SEE CORE DATA PROFILE IN REFERENCE DRAWINGS. (1)

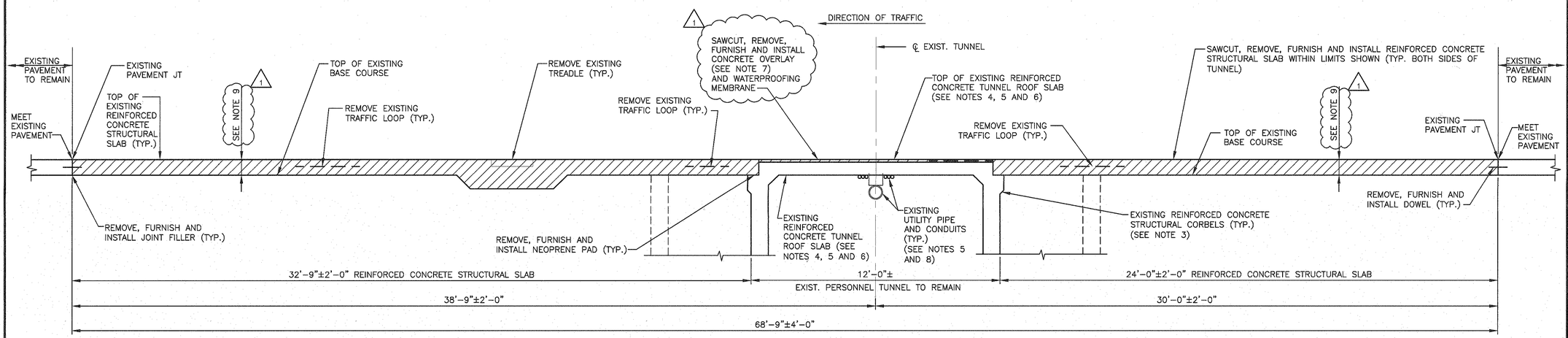

S 1 / S401 SECTION AT TOLL LANE SLAB (LANES 44, 42, 40, 38)

0 3 6
SCALE IN FEET

THE PORT AUTHORITY OF NY & NJ

ORIGINAL SIGNED BY
CSABA KERTESZ FOR
CHIEF STRUCTURAL ENGINEER

INFORMATION SHOWN IN THIS DRAWING IS CONCEPTUAL ONLY, AND IS NOT TO BE USED FOR CONSTRUCTION.

No.	Date	Revision	Approved
1	03/05/2015	ADDENDUM #8	R.P.

ENGINEERING DEPARTMENT

MULTI FACILITY

STRUCTURAL

Title
DESIGN AND IMPLEMENTATION OF REPLACEMENT TOLL COLLECTION SYSTEM

GEORGE WASHINGTON BRIDGE - PALISADES INTERSTATE PARKWAY TYPICAL TOLL LANE SLAB LONGITUDINAL SECTION

This drawing subject to conditions in contract. All inventions, ideas, designs and methods herein are reserved to Port Authority and may not be used without its written consent. All recipients of Contract documents, including bidders and those who do not bid and their prospective subcontractors and suppliers who may receive all or a part of the Contract documents or copies thereof, shall make every effort to ensure the secure and appropriate disposal of the Contract documents to prevent further disclosure of the information contained in the documents. Secure and appropriate disposal includes methods of document destruction such as shredding or arrangements with refuse handlers that ensure that third persons will not have access to the documents' contents either before, during, or after disposal. Documents may also be returned for disposal purposes to the Contract Desk on the 3rd Floor, 3 Gateway Center, Newark NJ 07102 or the office of the Director of Procurement, Two Montgomery Street, 3rd Floor, Jersey City, NJ 07302.
It is a violation of law for any person to alter a document in any way, unless acting under the direction of a licensed professional engineer or registered architect. If this document bearing the seal of an engineer/architect is altered, the altering engineer/architect shall affix to the document their seal and the notation "altered by" followed by their signature and the date of such alteration, and a specific description of the alteration.

Designed by	W.LAM / R.PANCHALAN
Drawn by	J.VIVAR / J.BLACK
Checked by	J.HO / S.SLOAN
Date	11/05/2014
Contract Number	MF-244.251
Drawing Number	S402

PID# 14463000

NOTES:

1. FOR FINISHED GRADE ELEVATION REQUIREMENTS, SEE CIVIL TECHNICAL PARAMETERS TP–03.
2. ALL STRUCTURAL WORK SHALL MEET THE REQUIREMENTS OF STRUCTURAL TECHNICAL PARAMETERS TP–02.
3. REPLACE OR STRENGTHEN THE CORBELS SUPPORTING THE REINFORCED CONCRETE STRUCTURAL SLAB AS REQUIRED TO MEET DESIGN PARAMETERS FOR REINFORCED CONCRETE STRUCTURAL SLAB OR IF A THICKER SLAB IS REQUIRED.
4. WHEN THE CONTRACTOR ELECTS TO INSTALL TREADLES AND/OR LOOPS IN THE LANE WITHIN THE LIMITS OF THE TUNNEL, A FULL DEPTH REPLACEMENT OF THE REINFORCED CONCRETE TUNNEL ROOF SLAB IS REQUIRED IF ANY PORTION OF THE TREADLES AND/OR LOOPS ARE INSTALLED INSIDE THE TUNNEL ROOF SLAB.
5. TEMPORARILY SUPPORT AND SHIELD ALL UTILITIES BEFORE PERFORMING FULL DEPTH REPLACEMENT OF THE REINFORCED CONCRETE TUNNEL ROOF SLAB.
6. WHEN THE CONTRACTOR ELECTS TO INSTALL TREADLES AND/OR LOOPS IN THE LANE WITHIN THE LIMITS OF THE TUNNEL, A FULL DEPTH REPLACEMENT OF THE REINFORCED CONCRETE TUNNEL ROOF SLAB IS NOT REQUIRED WHERE OVERLAY HAS ADEQUATE THICKNESS FOR THE TREADLES AND/OR LOOPS (DEVICES) TO BE INSTALLED ENTIRELY WITHIN AN OVERLAY SUCH THAT SAWCUT DEPTHS FOR SAID DEVICES CLEAR THE TOP OF THE TUNNEL ROOF SLAB BY 1 INCH MINIMUM.
7. THE EXISTING OVERLAY THICKNESS VARIES. FOR DETAILED INFORMATION ON EXISTING OVERLAY THICKNESS, SEE CORE DATA PROFILE IN REFERENCE DRAWINGS. PERFORM ALL OVERLAY REMOVAL AND INSTALLATION OPERATIONS WITHOUT CAUSING DAMAGE TO THE UNDERLYING TUNNEL ROOF SLAB. 1
8. EXISTING UTILITIES AND CONDUITS ATTACHED TO REINFORCED CONCRETE TUNNEL ROOF SLAB ARE SHOWN FOR REPRESENTATIVE (SCHEMATIC) PURPOSES ONLY. FOR DETAILED INFORMATION ON EXISTING UTILITIES AND CONDUITS, SEE UTILITY SURVEY REFERENCE DRAWINGS.
9. THE EXISTING REINFORCED CONCRETE STRUCTURAL SLAB (WITH OR WITHOUT OVERLAY) THICKNESS VARIES. FOR DETAILED INFORMATION ON EXISTING REINFORCED CONCRETE STRUCTURAL SLAB (WITH OR WITHOUT OVERLAY) TOTAL DEPTH THICKNESS, SEE CORE DATA PROFILE IN REFERENCE DRAWINGS. 1

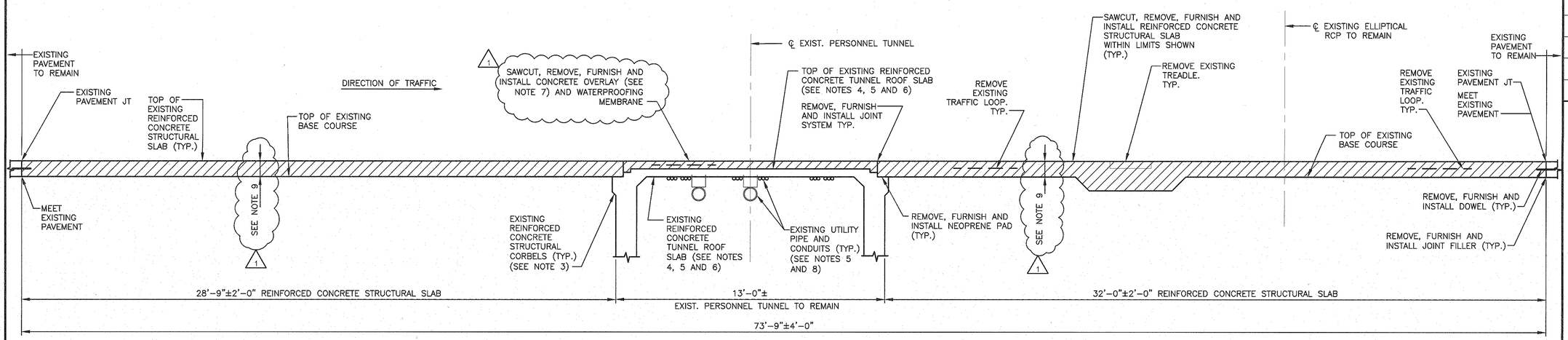

S 1 S501 SECTION AT TOLL LANE SLAB

0 3 6
SCALE IN FEET

Sheet 87 of 131

THE PORT AUTHORITY OF NY & NJ

ORIGINAL SIGNED BY
CSABA KERTESZ FOR
CHIEF STRUCTURAL ENGINEER

INFORMATION SHOWN IN THIS DRAWING IS CONCEPTUAL ONLY, AND IS NOT TO BE USED FOR CONSTRUCTION.

No.	Date	Revision	Approved
1	03/05/2015	ADDENDUM #8	R.P.

ENGINEERING DEPARTMENT

MULTI FACILITY

STRUCTURAL

Title
DESIGN AND IMPLEMENTATION OF REPLACEMENT TOLL COLLECTION SYSTEM

GEORGE WASHINGTON BRIDGE - LOWER LEVEL TYPICAL TOLL LANE SLAB LONGITUDINAL SECTION

This drawing subject to conditions in contract. All inventions, ideas, designs and methods herein are reserved to Port Authority and may not be used without its written consent. All recipients of Contract documents, including bidders and those who do not bid and their prospective subcontractors and suppliers who may receive all or a part of the Contract documents or copies thereof, shall make every effort to ensure the secure and appropriate disposal of the Contract documents to prevent further disclosure of the information contained in the documents. Secure and appropriate disposal includes methods of document destruction such as shredding or arrangements with refuse handlers that ensure that third persons will not have access to the documents' contents either before, during, or after disposal. Documents may also be returned for disposal purposes to the Contract Desk on the 3rd Floor, 3 Gateway Center, Newark NJ 07102 or the office of the Director of Procurement, Two Montgomery Street, 3rd Floor, Jersey City, NJ 07302.
It is a violation of law for any person to alter a document in any way, unless acting under the direction of a licensed professional engineer or registered architect. If this document bearing the seal of an engineer/architect is altered, the altering engineer/architect shall affix to the document their seal and the notation "altered by" followed by their signature and the date of such alteration, and a specific description of the alteration.

Designed by	W.LAM / R.PANCHALAN
Drawn by	J.VIVAR / J.BLACK
Checked by	J.HO / S.SLOAN
Date	11/05/2014
Contract Number	MF-244.251
Drawing Number	S502

PID# 14463000

NOTES:

1. FOR FINISHED GRADE ELEVATION REQUIREMENTS, SEE CIVIL TECHNICAL PARAMETERS TP–03.
2. ALL STRUCTURAL WORK SHALL MEET THE REQUIREMENTS OF STRUCTURAL TECHNICAL PARAMETERS TP–02.
3. REPLACE OR STRENGTHEN THE CORBELS SUPPORTING THE REINFORCED CONCRETE STRUCTURAL SLAB AS REQUIRED TO MEET DESIGN PARAMETERS FOR REINFORCED CONCRETE STRUCTURAL SLAB OR IF A THICKER SLAB IS REQUIRED.
4. WHEN THE CONTRACTOR ELECTS TO INSTALL TREADLES AND/OR LOOPS IN THE LANE WITHIN THE LIMITS OF THE TUNNEL, A FULL DEPTH REPLACEMENT OF THE REINFORCED CONCRETE TUNNEL ROOF SLAB IS REQUIRED IF ANY PORTION OF THE TREADLES AND/OR LOOPS ARE INSTALLED INSIDE THE TUNNEL ROOF SLAB.
5. TEMPORARILY SUPPORT AND SHIELD ALL UTILITIES BEFORE PERFORMING FULL DEPTH REPLACEMENT OF THE REINFORCED CONCRETE TUNNEL ROOF SLAB.
6. WHEN THE CONTRACTOR ELECTS TO INSTALL TREADLES AND/OR LOOPS IN THE LANE WITHIN THE LIMITS OF THE TUNNEL, A FULL DEPTH REPLACEMENT OF THE REINFORCED CONCRETE TUNNEL ROOF SLAB IS NOT REQUIRED WHERE OVERLAY HAS ADEQUATE THICKNESS FOR THE TREADLES AND/OR LOOPS (DEVICES) TO BE INSTALLED ENTIRELY WITHIN AN OVERLAY SUCH THAT SAWCUT DEPTHS FOR SAID DEVICES CLEAR THE TOP OF THE TUNNEL ROOF SLAB BY 1 INCH MINIMUM.
7. THE EXISTING OVERLAY THICKNESS VARIES. FOR DETAILED INFORMATION ON EXISTING OVERLAY THICKNESS, SEE CORE DATA PROFILE IN REFERENCE DRAWINGS. PERFORM ALL OVERLAY REMOVAL AND INSTALLATION OPERATIONS WITHOUT CAUSING DAMAGE TO THE UNDERLYING TUNNEL ROOF SLAB. (1)
8. EXISTING UTILITIES AND CONDUITS ATTACHED TO REINFORCED CONCRETE TUNNEL ROOF SLAB ARE SHOWN FOR REPRESENTATIVE (SCHEMATIC) PURPOSES ONLY. FOR DETAILED INFORMATION ON EXISTING UTILITIES AND CONDUITS, SEE UTILITY SURVEY REFERENCE DRAWINGS.
9. THE EXISTING REINFORCED CONCRETE STRUCTURAL SLAB (WITH OR WITHOUT OVERLAY) THICKNESS VARIES. FOR DETAILED INFORMATION ON EXISTING REINFORCED CONCRETE STRUCTURAL SLAB (WITH OR WITHOUT OVERLAY) TOTAL DEPTH THICKNESS, SEE CORE DATA PROFILE IN REFERENCE DRAWINGS. (1)

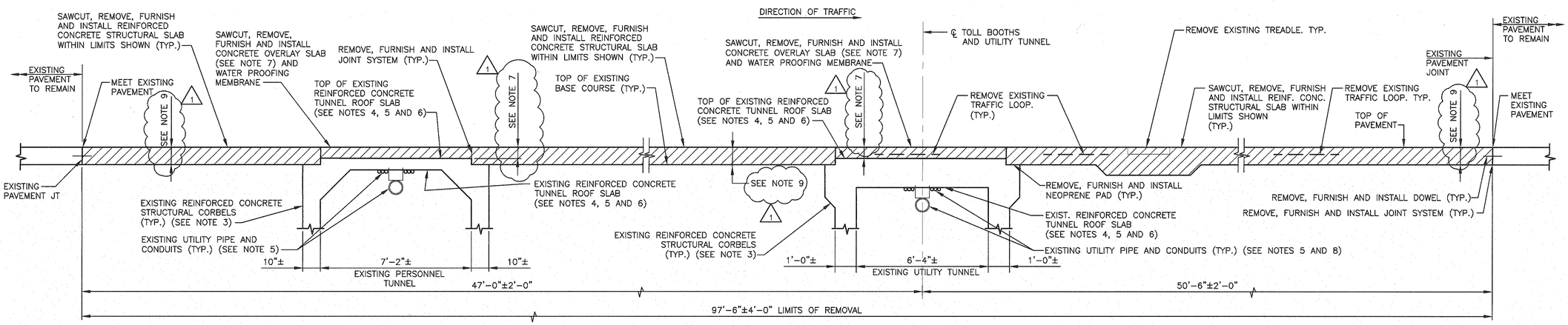

S 1 S801 SECTION AT TOLL LANE SLAB

0 3 6
SCALE IN FEET

THE PORT AUTHORITY OF NY & NJ

ORIGINAL SIGNED BY
CSABA KERTESZ FOR
CHIEF STRUCTURAL ENGINEER

INFORMATION SHOWN IN THIS DRAWING IS CONCEPTUAL ONLY, AND IS NOT TO BE USED FOR CONSTRUCTION.

No.	Date	Revision	Approved
1	03/06/2015	ADDENDUM #8	R.P.

ENGINEERING DEPARTMENT

MULTI FACILITY

STRUCTURAL

Title
DESIGN AND IMPLEMENTATION OF REPLACEMENT TOLL COLLECTION SYSTEM

LINCOLN TUNNEL
TYPICAL TOLL LANE
SLAB LONGITUDINAL
SECTION - 1

This drawing subject to conditions in contract. All inventions, ideas, designs and methods herein are reserved to Port Authority and may not be used without its written consent. All recipients of Contract documents, including bidders and those who do not bid and their prospective subcontractors and suppliers who may receive all or a part of the Contract documents or copies thereof, shall make every effort to ensure the secure and appropriate disposal of the Contract documents to prevent further disclosure of the information contained in the documents. Secure and appropriate disposal includes methods of document destruction such as shredding or arrangements with refuse handlers that ensure that third persons will not have access to the documents' contents either before, during, or after disposal. Documents may also be returned for disposal purposes to the Contract Desk on the 3rd Floor, 3 Gateway Center, Newark NJ 07102 or the office of the Director of Procurement, Two Montgomery Street, 3rd Floor, Jersey City, NJ 07302.
It is a violation of law for any person to alter a document in any way, unless acting under the direction of a licensed professional engineer or registered architect. If this document bearing the seal of an engineer/architect is altered, the altering engineer/architect shall affix to the document their seal and the notation "altered by" followed by their signature and the date of such alteration, and a specific description of the alteration.

Designed by	W.LAM / R.PANCHALAN
Drawn by	J.VIVAR / J.BLACK
Checked by	J.HO / S.SLOAN
Date	11/05/2014
Contract Number	MF-244.251
Drawing Number	S802

PID# 14463000

NOTES:

1. FOR FINISHED GRADE ELEVATION REQUIREMENTS, SEE CIVIL TECHNICAL PARAMETERS TP-03.
2. ALL STRUCTURAL WORK SHALL MEET THE REQUIREMENTS OF STRUCTURAL TECHNICAL PARAMETERS TP-02.
3. REPLACE OR STRENGTHEN THE CORBELS SUPPORTING THE REINFORCED CONCRETE STRUCTURAL SLAB AS REQUIRED TO MEET DESIGN PARAMETERS FOR REINFORCED CONCRETE STRUCTURAL SLAB OR IF A THICKER SLAB IS REQUIRED.
4. WHEN THE CONTRACTOR ELECTS TO INSTALL TREADLES AND/OR LOOPS IN THE LANE WITHIN THE LIMITS OF THE TUNNEL, A FULL DEPTH REPLACEMENT OF THE REINFORCED CONCRETE TUNNEL ROOF SLAB IS REQUIRED IF ANY PORTION OF THE TREADLES AND/OR LOOPS ARE INSTALLED INSIDE THE TUNNEL ROOF SLAB.
5. TEMPORARILY SUPPORT AND SHIELD ALL UTILITIES BEFORE PERFORMING FULL DEPTH REPLACEMENT OF THE REINFORCED CONCRETE TUNNEL ROOF SLAB.
6. WHEN THE CONTRACTOR ELECTS TO INSTALL TREADLES AND/OR LOOPS IN THE LANE WITHIN THE LIMITS OF THE TUNNEL, A FULL DEPTH REPLACEMENT OF THE REINFORCED CONCRETE TUNNEL ROOF SLAB IS NOT REQUIRED WHERE OVERLAY HAS ADEQUATE THICKNESS FOR THE TREADLES AND/OR LOOPS (DEVICES) TO BE INSTALLED ENTIRELY WITHIN AN OVERLAY SUCH THAT SAWCUT DEPTHS FOR SAID DEVICES CLEAR THE TOP OF THE TUNNEL ROOF SLAB BY 1 INCH MINIMUM.
7. THE EXISTING OVERLAY THICKNESS VARIES. FOR DETAILED INFORMATION ON EXISTING OVERLAY THICKNESS, SEE CORE DATA PROFILE IN REFERENCE DRAWINGS. PERFORM ALL OVERLAY REMOVAL AND INSTALLATION OPERATIONS WITHOUT CAUSING DAMAGE TO THE UNDERLYING TUNNEL ROOF SLAB. (1)
8. EXISTING UTILITIES AND CONDUITS ATTACHED TO REINFORCED CONCRETE TUNNEL ROOF SLAB ARE SHOWN FOR REPRESENTATIVE (SCHEMATIC) PURPOSES ONLY. FOR DETAILED INFORMATION ON EXISTING UTILITIES AND CONDUITS, SEE UTILITY SURVEY REFERENCE DRAWINGS.
9. THE EXISTING REINFORCED CONCRETE STRUCTURAL SLAB (WITH OR WITHOUT OVERLAY) THICKNESS VARIES. FOR DETAILED INFORMATION ON EXISTING REINFORCED CONCRETE STRUCTURAL SLAB (WITH OR WITHOUT OVERLAY) TOTAL DEPTH THICKNESS, SEE CORE DATA PROFILE IN REFERENCE DRAWINGS. (1)

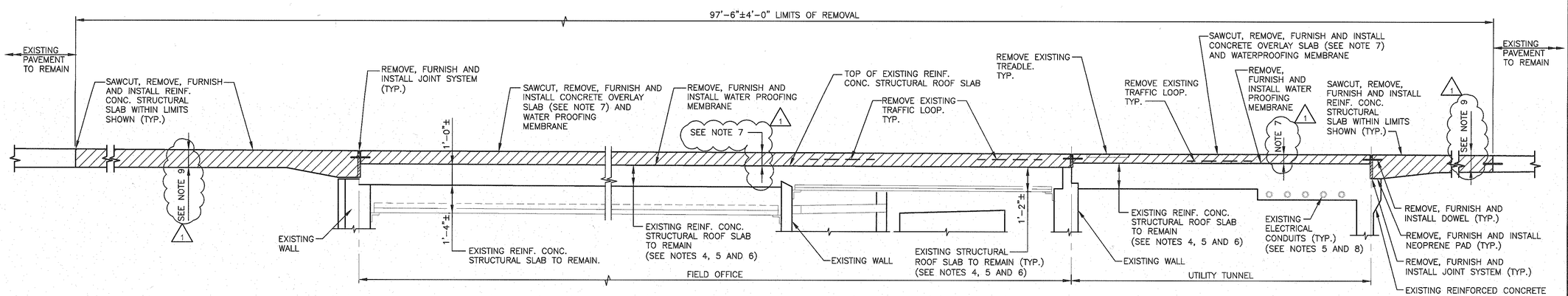

S 2 / S801 SECTION AT TOLL LANE SLAB

0 3 6
SCALE IN FEET

Sheet 92 of 131

THE PORT AUTHORITY OF NY & NJ

ORIGINAL SIGNED BY
CSABA KERTESZ FOR
CHIEF STRUCTURAL ENGINEER

INFORMATION SHOWN IN THIS DRAWING IS CONCEPTUAL ONLY, AND IS NOT TO BE USED FOR CONSTRUCTION.

No.	Date	Revision	Approved
1	03/05/2015	ADDENDUM #8	R.P.

ENGINEERING DEPARTMENT

MULTI FACILITY

STRUCTURAL

Title
DESIGN AND IMPLEMENTATION OF REPLACEMENT TOLL COLLECTION SYSTEM

LINCOLN TUNNEL TYPICAL TOLL LANE SLAB LONGITUDINAL SECTION - 2

This drawing subject to conditions in contract. All inventions, ideas, designs and methods herein are reserved to Port Authority and may not be used without its written consent. All recipients of Contract documents, including bidders and those who do not bid and their prospective subcontractors and suppliers who may receive all or a part of the Contract documents or copies thereof, shall make every effort to ensure the secure and appropriate disposal of the Contract documents to prevent further disclosure of the information contained in the documents. Secure and appropriate disposal includes methods of document destruction such as shredding or arrangements with refuse handlers that ensure that third persons will not have access to the documents' contents either before, during, or after disposal. Documents may also be returned for disposal purposes to the Contract Desk on the 3rd Floor, 3 Gateway Center, Newark NJ 07102 or the office of the Director of Procurement, Two Montgomery Street, 3rd Floor, Jersey City, NJ 07302.
It is a violation of law for any person to alter a document in any way, unless acting under the direction of a licensed professional engineer or registered architect. If this document bearing the seal of an engineer/architect is altered, the altering engineer/architect shall affix to the document their seal and the notation "altered by" followed by their signature and the date of such alteration, and a specific description of the alteration.

Designed by	W.LAM / R.PANCHALAN
Drawn by	J.VIVAR / J.BLACK
Checked by	J.HO / S.SLOAN
Date	11/05/2014
Contract Number	MF-244.251
Drawing Number	S803

PID# 14463000

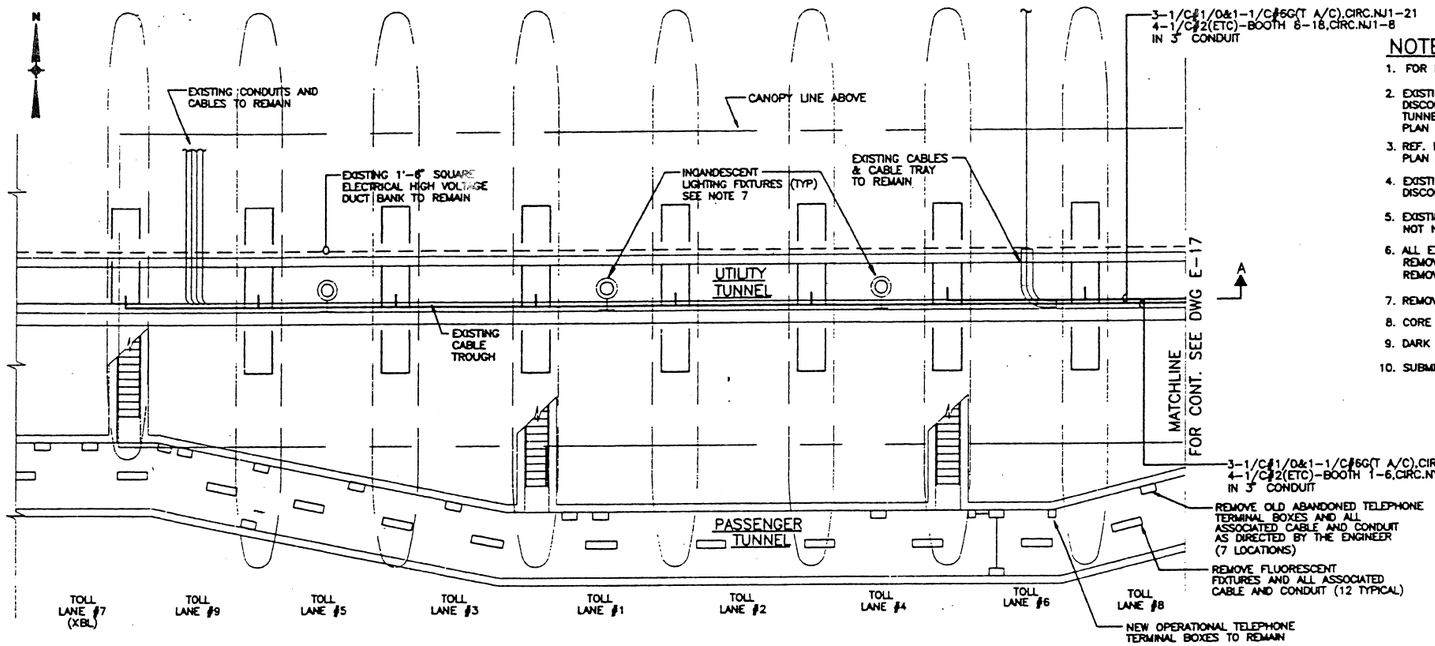

BASEMENT LEVEL

0 5 10 15
SCALE IN FEET

NOTES:

1. FOR LEGEND GENERAL NOTES AND ABBREVIATIONS SEE DWGS. E-1 AND E-2.
2. EXISTING TOLLS TERMINAL & TREADLE CABLES WILL BE REUSED DURING THE INTERIM CONSTRUCTION STAGE. DISCONNECT AND PULL CABLES BACK THRU TO THE BASEMENT OR CABLE THROUGH IN THE UTILITY TUNNEL. REF. DWG. E-50 FOR TRS SYSTEM BLOCK DIAGRAM & DWG. E-31 FOR TYPICAL TOLL LANE PLAN AND ELEVATION.
3. REF. DWG. E-11 FOR TOLL BOOTH POWER WIRING DIAGRAMS AND DRAWING E-31 FOR TYPICAL TOLL LANE PLAN AND ELEVATION.
4. EXISTING E.T.C. POWER AND COMM. CABLES WILL BE REUSED DURING THE INTERIM CONSTRUCTION STAGE. DISCONNECT AND PULL CABLES BACK THRU TO THE BASEMENT OR CABLE THROUGH IN THE UTILITY TUNNEL.
5. EXISTING MISC. CABLES SHALL BE DISCONNECTED AND PULLED BACK THRU TO UTILITY TUNNEL. CABLES WHICH ARE NOT NEEDED DURING THE INTERIM CONSTRUCTION STAGE SHALL BE REMOVED BACK TO THE SOURCE.
6. ALL EXISTING AND INTERIM CABLES IN THE UTILITY TUNNEL AND F.O.B. WHICH FEED THE TOLL BOOTHS SHALL BE REMOVED BACK TO THE SOURCE AFTER THE PERMANENT CABLES ARE INSTALLED AND MADE OPERATIONAL. ALL REMOVALS SHALL BE COORDINATED AND APPROVED BY THE ENGINEER.
7. REMOVE EXISTING LIGHTING FIXTURES AND REPLACE AS INDICATED ON DWG E-27.
8. CORE DRILL EXISTING BOOTH TO INSTALL CONDUIT STUB UP. EXACT LOCATION TO BE DETERMINED IN FIELD.
9. DARK LINES (——) SHOWN ON THIS DRAWING DENOTE NEW CONDUITS AND WIRES TO BE FURNISHED AND INSTALLED.
10. SUBMIT DETAILED SHOP DRAWINGS SHOWING ALL REMOVALS FOR APPROVAL BY THE ENGINEER.

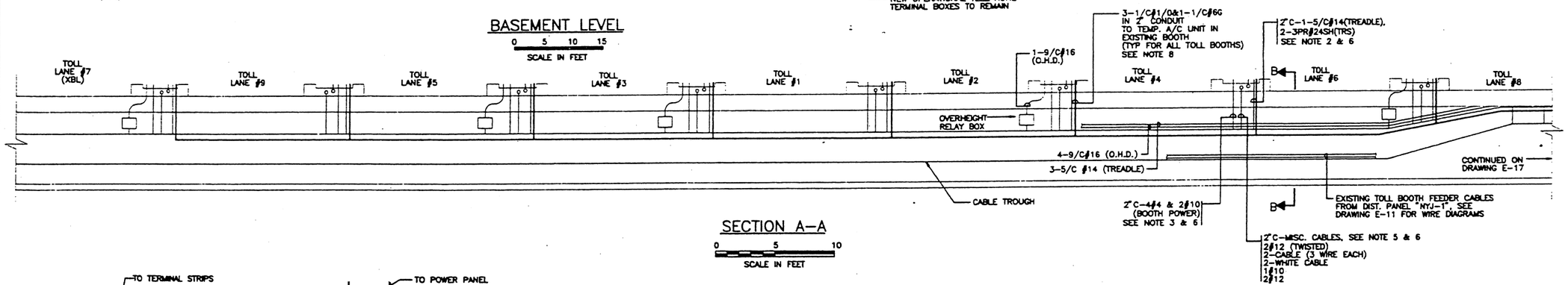

SECTION A-A

0 5 10
SCALE IN FEET

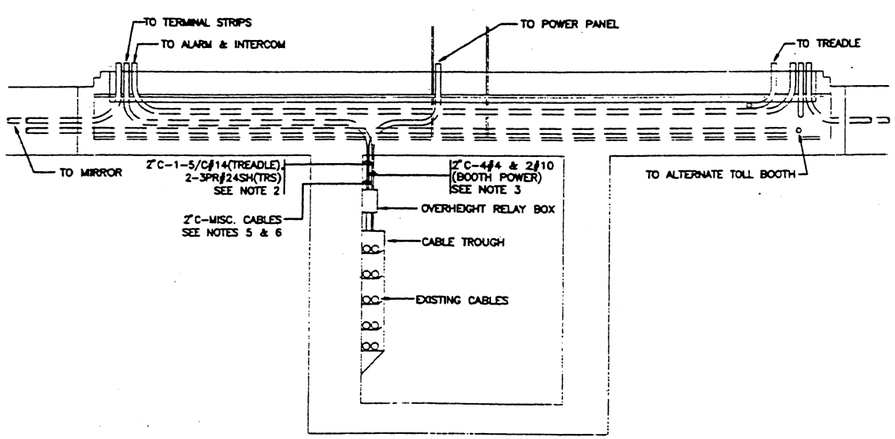

SECTION B-B

0 1 2 3 4
SCALE IN FEET

Sheet 205 of 306

THE PORT AUTHORITY OF NY & NJ

ENGINEERING PROGRAM MANAGER, TUNNELS, BRIDGES, TERMINALS & PATH

CHIEF ELECTRICAL ENGINEER

CONFORMED COPY

No.	Date	Revision	Approved

Engineering Department
Design Divisions

Lincoln Tunnel

Title

N.J. PLAZA REHABILITATION AND UPGRADE

ELECTRICAL

FIELD OFFICE BASEMENT EXISTING CONDITIONS REMOVAL & INSTALLATION PLAN (SHEET 3 OF 5)

This drawing subject to conditions in contract. All inventions, ideas, designs and methods herein are reserved to Port Authority and may not be used without its written consent.

J.L./R.M.	J.L./L.O./I.K.	G. LIN
Designed by	Drawn by	Checked by

Date 4/14/97 Scale AS NOTED

Contract Number LT-234.056

Drawing Number E-19

PA-SHT REV 9

PLOT AT 1"=10'

FILE NAME: \\11\234056\E19BHW.DWG DATE: MARCH 20, 1997

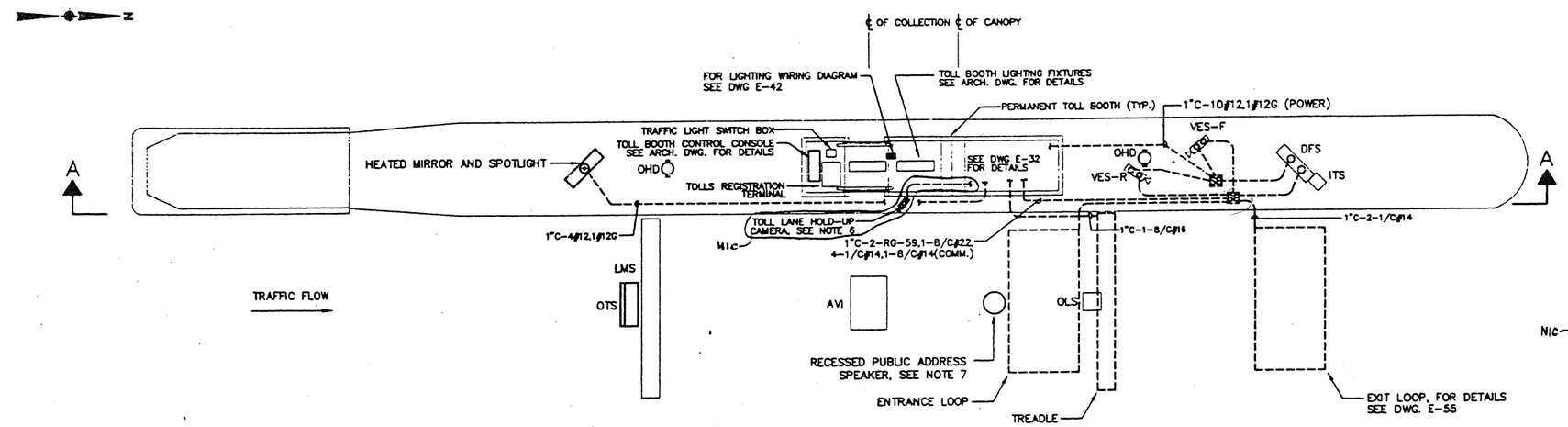

TOLL ISLAND PLAN

0 2 4 6 8
SCALE IN FEET

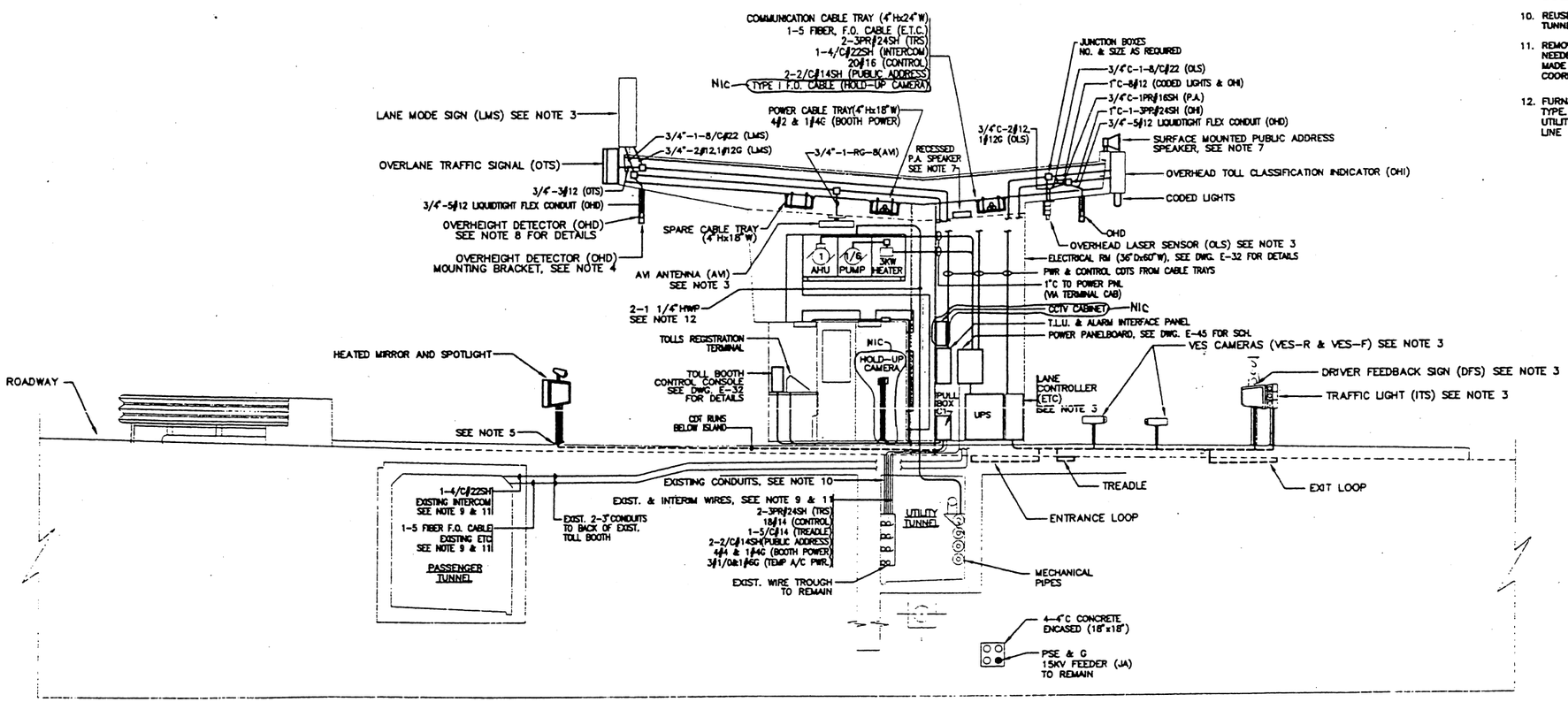

SECTION 'A-A'

1 / E-29

0 2 4 6 8
SCALE IN FEET

NOTES:

1. FOR LEGEND AND ABBREVIATIONS, SEE DRAWING E-1.
2. FOR GENERAL NOTES, SEE DRAWING E-2.
3. FOR E.T.C. AND T.R.S. EQUIPMENT TO BE FURNISHED AND INSTALLED BY OTHERS, SEE DWG. E-2 "WORK DONE BY OTHERS" FOR DETAILS. EXACT LOCATIONS OF E.T.C. EQUIPMENT SHALL ALSO BE PROVIDED BY OTHERS. ALL WIRING TO E.T.C. & T.R.S. EQUIPMENT SHALL BE BY THE CONTRACTOR. COIL EXTRA CABLE FOR CONNECTION TO E.T.C. & T.R.S. EQUIPMENT. FINAL CABLE CONNECTION TO E.T.C. EQUIPMENT SHALL BE BY OTHERS. FINAL CABLE CONNECTIONS TO T.R.S. EQUIPMENT SHALL BE BY THE CONTRACTOR.
4. CONTRACTOR SHALL SUBMIT SHOP DWGS. OF PROPOSED CONDUIT INSTALLATIONS, EQUIPMENT MOUNTING BRACKETS & SUPPORTS, AND EQUIPMENT LOCATIONS FOR APPROVAL BY THE ENGINEER PRIOR TO INSTALLATION.
5. CONTRACTOR SHALL ROUGH-IN CONDUITS TERMINATED AT ABOVE HEIGHT OF FINISHED CURB, BEFORE CONCRETE IS POURED.
6. NIC — SEE DWG. E-63 FOR TOLL LANE SURVEILLANCE SYSTEM BLOCK DIAGRAM AND DWG. E-64 FOR EQUIPMENT INSTALLATION DETAILS.
7. SEE DWG. E-69 FOR PUBLIC ADDRESS SYSTEM BLOCK DIAGRAM. EXACT LOCATION OF SPEAKERS WILL BE PROVIDED BY OTHERS.
8. SEE DWG. E-57 FOR OVERHEIGHT & ALARM MONITORING SYSTEM BLOCK DIAGRAM. OHD SHALL BE MOUNTED 13 FEET 6 INCHES FROM THE TOP OF THE ROADWAY.
9. PRIOR TO DEMOLITION OF TOLL BOOTH AND ISLAND, DISCONNECT AND REMOVE EXISTING CABLES FROM THE BOOTH WHICH RUN TO THE TUNNEL BELOW. THEN PULL CABLES BACK DOWN INTO THE TUNNEL FOR USE DURING THE INTERIM CONSTRUCTION STAGE. ALSO RUN ANY NEW INTERIM POWER AND COMMUNICATION CABLES AS REQUIRED USING THE TUNNELS. THE CABLE TRAYS IN THE CANOPY WILL BE USED TO RUN THE PERMANENT CABLES BACK TO THE TOLL BUILDING.
10. REUSE EXISTING CONDUITS UPTO TOLL BOOTH FROM UTILITY TUNNEL. CORE DRILL FOR NEW CONDUITS AS REQUIRED.
11. REMOVE INTERIM AND EXISTING CABLES WHICH ARE NO LONGER NEEDED AFTER PERMANENT CABLES HAVE BEEN INSTALLED AND MADE OPERATIONAL. ALL CABLE REMOVALS SHALL BE COORDINATED AND APPROVED BY THE ENGINEER.
12. FURNISH AND INSTALL COMPLETE 120 VOLT SELF LIGHTING TYPE. HEAT TRACING SYSTEM FOR 2- 1 1/4"HWP BETWEEN UTILITY TUNNEL AND AHU UNIT FOR EACH BOOTH TO PREVENT LINE FREEZING. SEE MECHANICAL DRAWINGS FOR DETAILS.

Sheet 217 of 306

THE PORT AUTHORITY OF NY & NJ

ENGINEERING PROGRAM MANAGER, TUNNELS, BRIDGES, TERMINALS & PATH

CHIEF ELECTRICAL ENGINEER

CONFORMED COPY

No.	Date	Revision	Approved

Engineering Department
Design Divisions

Lincoln Tunnel

Title

N.J. PLAZA REHABILITATION AND UPGRADE

ELECTRICAL

PERMANENT & INTERIM TYPICLAL TOLL LANE INSTALLATION PLAN AND ELEVATION

This drawing subject to conditions in contract. All inventions, ideas, designs and methods herein are reserved to Port Authority and may not be used without its written consent.

J.L./R.M. Designed by — J.L./L.O./L.K. Drawn by — G. LIN Checked by

Date 4/14/97 — Scale AS NOTED

Contract Number LT-234.056 — Drawing Number E-31

FILE NAME: /LT/234056/E031R00.DWG DATE: MARCH 27, 1997

NOTES:

1. FOR CORE DATA PROFILE, SEE DRAWING SK-001A.

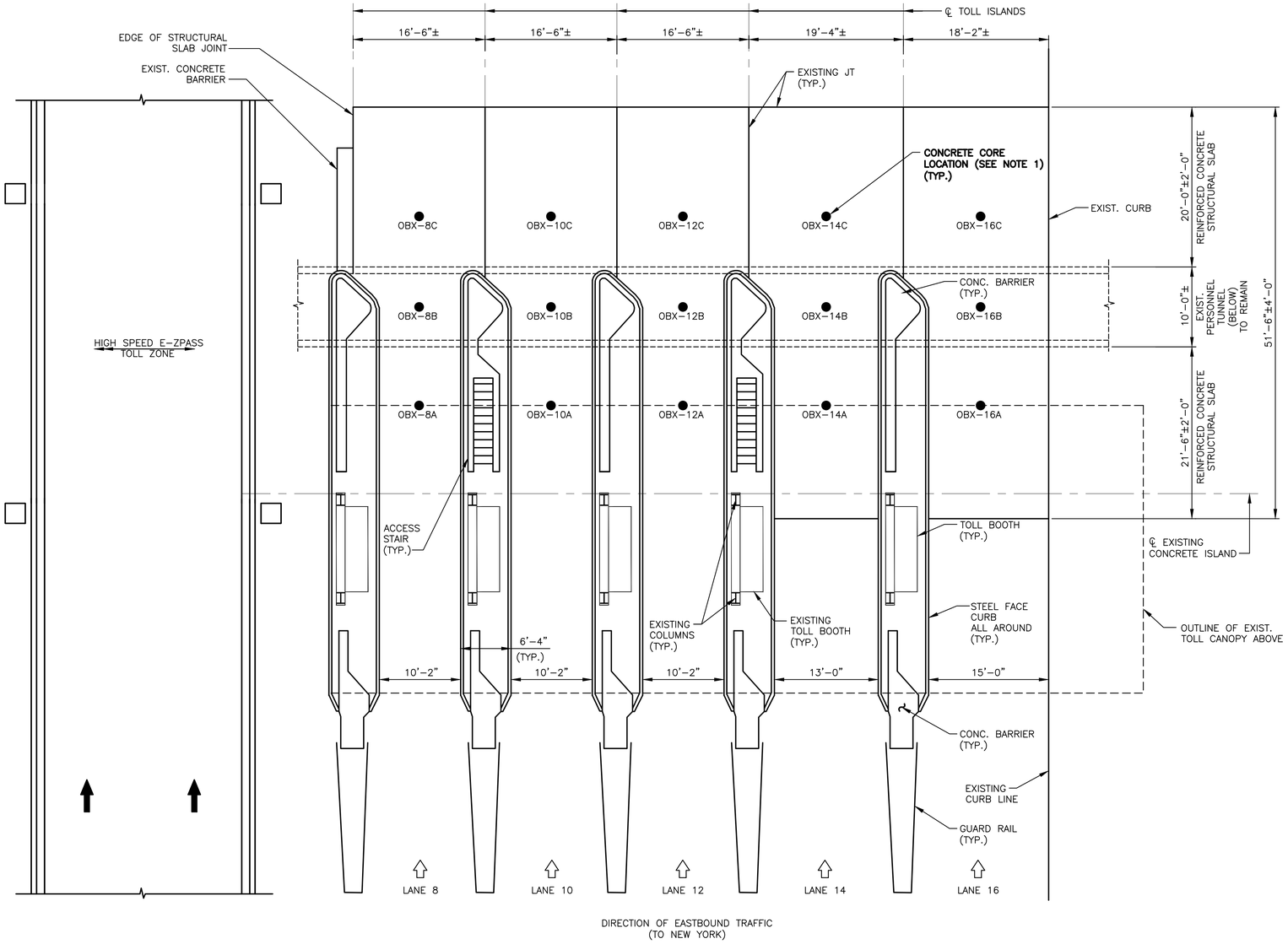

PARTIAL PLAN – TOLL LANES

NOT TO SCALE

N

Sheet of

THE PORT AUTHORITY OF NY & NJ

No.	Date	Revision	Approved

ENGINEERING DEPARTMENT

MULTI FACILITY

STRUCTURAL

Title

DESIGN AND IMPLEMENTATION OF REPLACEMENT TOLL COLLECTION SYSTEM

OUTERBRIDGE CROSSING

CORE LOCATION PLAN

Drawing Number SK-001

NOTES:
1. FOR CORE LOCATION PLAN, SEE DRAWING SK-001

CORE DATA PROFILES AT OUTERBRIDGE CROSSING (EXISTING CONDITIONS)

FACILITY	CORE ID	TOLL LANE LOCATION	OVERLAY DEPTH (IN INCHES)	WATERPROOFING MEMBRANE DEPTH (IN INCHES)	MEMBRANE TYPE	REINFORCED CONCRETE STRUCTURAL SLAB DEPTH (IN INCHES)	TUNNEL ROOF SLAB DEPTH (IN INCHES)	TOTAL DEPTH (IN INCHES)
OBX	OBX-8A	8	3.50	NONE	---	14.75	---	18.25
OBX	OBX-8B	8	4.67	NONE	---	---	11.00	15.67
OBX	OBX-8C	8	4.00	NONE	---	12.75	---	16.75
OBX	OBX-10A	10	4.50	NONE	---	12.00	---	16.50
OBX	OBX-10B	10	4.75	NONE	---	---	NOT SAMPLED	---
OBX	OBX-10C	10	4.00	NONE	---	12.50	---	16.50
OBX	OBX-12A	12	---	NONE	---	14.25	---	14.25
OBX	OBX-12B	12	2.50	NONE	---	---	NOT SAMPLED	---
OBX	OBX-12C	12	---	NONE	---	16.00	---	16.00
OBX	OBX-14A	14	---	NONE	---	12.50	---	12.50
OBX	OBX-14B	14	4.50	NONE	---	---	10.50	15.00
OBX	OBX-14C	14	---	NONE	---	16.25	---	16.25
OBX	OBX-16A	16	---	NONE	---	16.50	---	16.50
OBX	OBX-16B	16	2.25	NONE	---	---	NOT SAMPLED	---
OBX	OBX-16C	16	---	NONE	---	21.50	---	21.50

Sheet of

THE PORT AUTHORITY OF NY & NJ

No.	Date	Revision	Approved

ENGINEERING DEPARTMENT

MULTI FACILITY

STRUCTURAL

Title
DESIGN AND IMPLEMENTATION OF REPLACEMENT TOLL COLLECTION SYSTEM

OUTERBRIDGE CROSSING

CORE DATA PROFILE

Drawing Number SK-001A

NOTES:

1. FOR CORE DATA PROFILE, SEE DRAWING SK-002A.

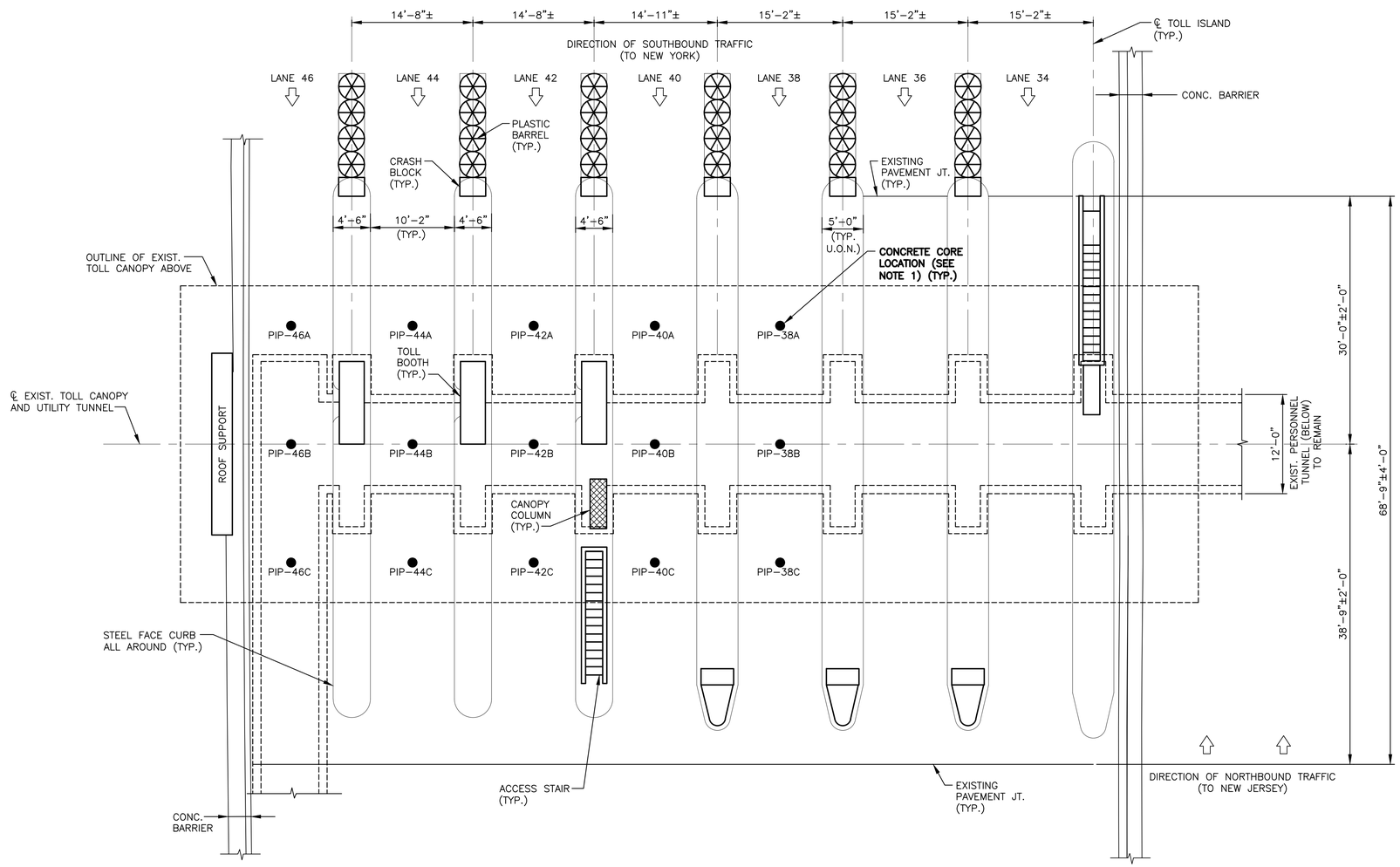

PARTIAL PLAN – TOLL LANES

NOT TO SCALE

N

Sheet of

THE PORT AUTHORITY
OF NY & NJ

No.	Date	Revision	Approved

ENGINEERING DEPARTMENT

MULTI FACILITY

STRUCTURAL

Title
DESIGN AND IMPLEMENTATION OF REPLACEMENT TOLL COLLECTION SYSTEM

GEORGE WASHINGTON BRIDGE - PALISADES INTERSTATE PARKWAY

CORE LOCATION PLAN

Drawing Number SK-002

NOTES:
1. FOR CORE LOCATION PLAN, SEE DRAWING SK-002

CORE DATA PROFILES AT GEORGE WASHINGTON BRIDGE - PALISADES INTERSTATE PARKWAY (EXISTING CONDITIONS)

FACILITY	CORE ID	TOLL LANE LOCATION	OVERLAY DEPTH (IN INCHES)	WATERPROOFING MEMBRANE DEPTH (IN INCHES)	MEMBRANE TYPE	REINFORCED CONCRETE STRUCTURAL SLAB DEPTH (IN INCHES)	TUNNEL ROOF SLAB DEPTH (IN INCHES)	TOTAL DEPTH (IN INCHES)
GWB – PIP	PIP – 38A	38	0.63	NONE	---	NOT DETERMINED* (SEE TYPICAL NOTE BELOW)	---	NOT DETERMINED*
GWB – PIP	PIP – 38B	38	0.75	NONE	---	---	10.50	11.25
GWB – PIP	PIP – 38C	38	0.63	NONE	---	NOT DETERMINED*	---	NOT DETERMINED*
GWB – PIP	PIP – 40A	40	1.00	NONE	---	14.75	---	15.75
GWB – PIP	PIP – 40B	40	1.00	NONE	---	---	NOT SAMPLED	---
GWB – PIP	PIP – 40C	40	1.00	NONE	---	14.75	---	15.75
GWB – PIP	PIP – 42A	42	0.63	NONE	---	15.37	---	16.00
GWB – PIP	PIP – 42B	42	0.63	NONE	---	---	NOT SAMPLED	---
GWB – PIP	PIP – 42C	42	0.63	NONE	---	14.37	---	15.00
GWB – PIP	PIP – 44A	44	0.63	NONE	---	14.37	---	15.00
GWB – PIP	PIP – 44B	44	0.63	NONE	---	---	NOT SAMPLED	---
GWB – PIP	PIP – 44C	44	0.63	NONE	---	14.87	---	15.50
GWB – PIP	PIP – 46A	46	NOT SAMPLED	NONE	---	NOT SAMPLED	NOT SAMPLED	---
GWB – PIP	PIP – 46B	46	0.63	NONE	---	---	10.50	11.13
GWB – PIP	PIP – 46C	46	0.63	NONE	---	14.37	---	15.00

*NOTE: UNABLE TO DETERMINE SLAB DEPTH DUE TO EMBEDDED STEEL OBSTRUCTION.

Sheet of

THE PORT AUTHORITY OF NY & NJ

No.	Date	Revision	Approved

ENGINEERING DEPARTMENT

MULTI FACILITY

STRUCTURAL

Title
DESIGN AND IMPLEMENTATION OF REPLACEMENT TOLL COLLECTION SYSTEM

GEORGE WASHINGTON BRIDGE - PALISADES INTERSTATE PARKWAY

CORE DATA PROFILE

Drawing Number SK-002A

NOTES:

1. FOR CORE DATA PROFILE, SEE DRAWING SK-003A.

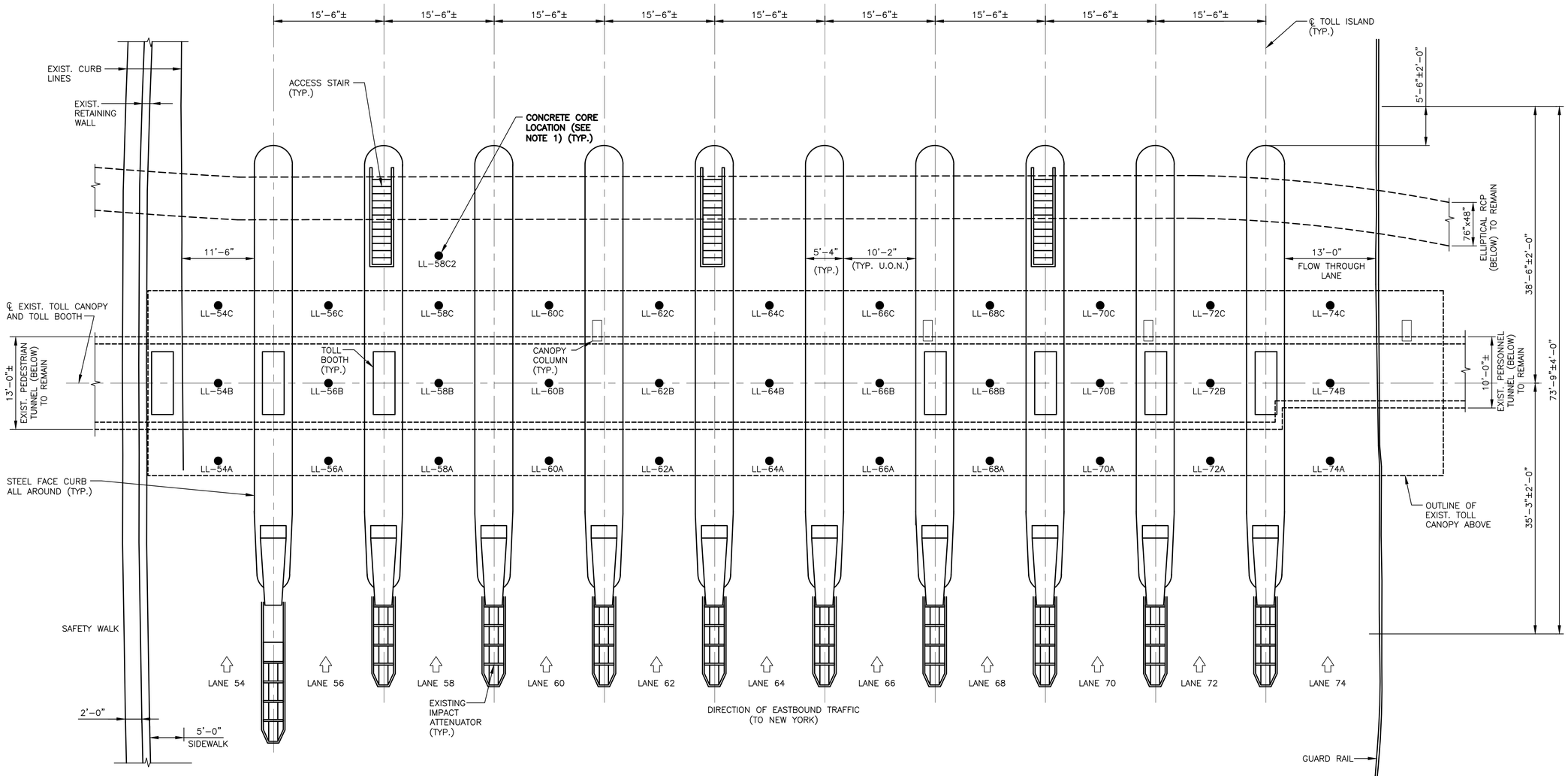

PARTIAL PLAN – TOLL LANES

NOT TO SCALE

Sheet of

THE PORT AUTHORITY
OF NY & NJ

No.	Date	Revision	Approved

ENGINEERING DEPARTMENT

MULTI FACILITY

STRUCTURAL

Title

DESIGN AND IMPLEMENTATION OF REPLACEMENT TOLL COLLECTION SYSTEM

GEORGE WASHINGTON BRIDGE - LOWER LEVEL TOLL LANE SLAB PLAN

CORE LOCATION PLAN

Drawing Number SK-003

NOTES:
1. FOR CORE LOCATION PLAN, SEE DRAWING SK-003

CORE DATA PROFILES AT GEORGE WASHINGTON BRIDGE - LOWER LEVEL (EXISTING CONDITIONS)

FACILITY	CORE ID	TOLL LANE LOCATION	OVERLAY DEPTH (IN INCHES)	WATERPROOFING MEMBRANE DEPTH (IN INCHES)	MEMBRANE TYPE	REINFORCED CONCRETE STRUCTURAL SLAB DEPTH (IN INCHES)	TUNNEL ROOF SLAB DEPTH (IN INCHES)	TOTAL DEPTH (IN INCHES)
GWB – LL	LL-54A	54	1.25	NONE	---	13.25	---	14.50
GWB – LL	LL-54B	54	2.50	NONE	---	---	11.50	14.00
GWB – LL	LL-54C	54	1.00	NONE	---	15.00	---	16.00
GWB – LL	LL-56A	56	0.63	NONE	---	15.37	---	16.00
GWB – LL	LL-56B	56	0.63	NONE	---	---	NOT SAMPLED	---
GWB – LL	LL-56C	56	0.63	NONE	---	15.37	---	16.00
GWB – LL	LL-58A	58	0.63	NONE	---	17.75	---	18.38
GWB – LL	LL-58B	58	0.87	NONE	---	---	NOT SAMPLED	---
GWB – LL	LL-58C	58	0.87	NONE	---	19.13	---	20.00
GWB – LL	LL-58C2	58	0.63	NONE	---	17.87	---	18.50
GWB – LL	LL-60A	60	0.63	NONE	---	16.62	---	17.25
GWB – LL	LL-60B	60	2.50	NONE	---	---	NOT SAMPLED	---
GWB – LL	LL-60C	60	0.63	NONE	---	17.87	---	18.50
GWB – LL	LL-62A	62	1.00	NONE	---	17.50	---	18.50
GWB – LL	LL-62B	62	3.00	NONE	---	---	NOT SAMPLED	---
GWB – LL	LL-62C	62	4.00	NONE	---	14.50	---	18.50
GWB – LL	LL-64A	64	0.87	NONE	---	18.13	---	19.00
GWB – LL	LL-64B	64	1.50	NONE	---	---	11.75	13.25
GWB – LL	LL-64C	64	5.00	NONE	---	14.25	---	19.25
GWB – LL	LL-66A	66	0.50	NONE	---	17.50	---	18.00
GWB – LL	LL-66B	66	0.87	NONE	---	---	NOT SAMPLED	---
GWB – LL	LL-66C	66	4.00	NONE	---	14.50	---	18.50
GWB – LL	LL-68A	68	1.00	NONE	---	17.75	---	18.75
GWB – LL	LL-68B	68	2.25	NONE	---	---	NOT SAMPLED	---
GWB – LL	LL-68C	68	4.50	NONE	---	14.25	---	18.75
GWB – LL	LL-70A	70	1.00	NONE	---	17.00	---	18.00
GWB – LL	LL-70B	70	2.50	NONE	---	---	NOT SAMPLED	---
GWB – LL	LL-70C	70	1.00	NONE	---	18.25	---	19.25
GWB – LL	LL-72A	72	1.00	NONE	---	16.25	---	17.25
GWB – LL	LL-72B	72	1.25	NONE	---	---	NOT SAMPLED	---
GWB – LL	LL-72C	72	6.00	NONE	---	11.25	---	17.25
GWB – LL	LL-74A	74	0.00	NONE	---	21.00	---	21.00
GWB – LL	LL-74B	74	3.50	NONE	---	---	12.00	15.50
GWB – LL	LL-74C	74	NOT SAMPLED	NONE	---	NOT SAMPLED	---	NOT SAMPLED

Sheet of

THE PORT AUTHORITY OF NY & NJ

No.	Date	Revision	Approved

ENGINEERING DEPARTMENT

MULTI FACILITY

STRUCTURAL

Title
DESIGN AND IMPLEMENTATION OF REPLACEMENT TOLL COLLECTION SYSTEM

GEORGE WASHINGTON BRIDGE - LOWER LEVEL

CORE DATA PROFILE

Drawing Number SK-003A

NOTES:

1. FOR CORE DATA PROFILE, SEE DRAWING SK-004A.

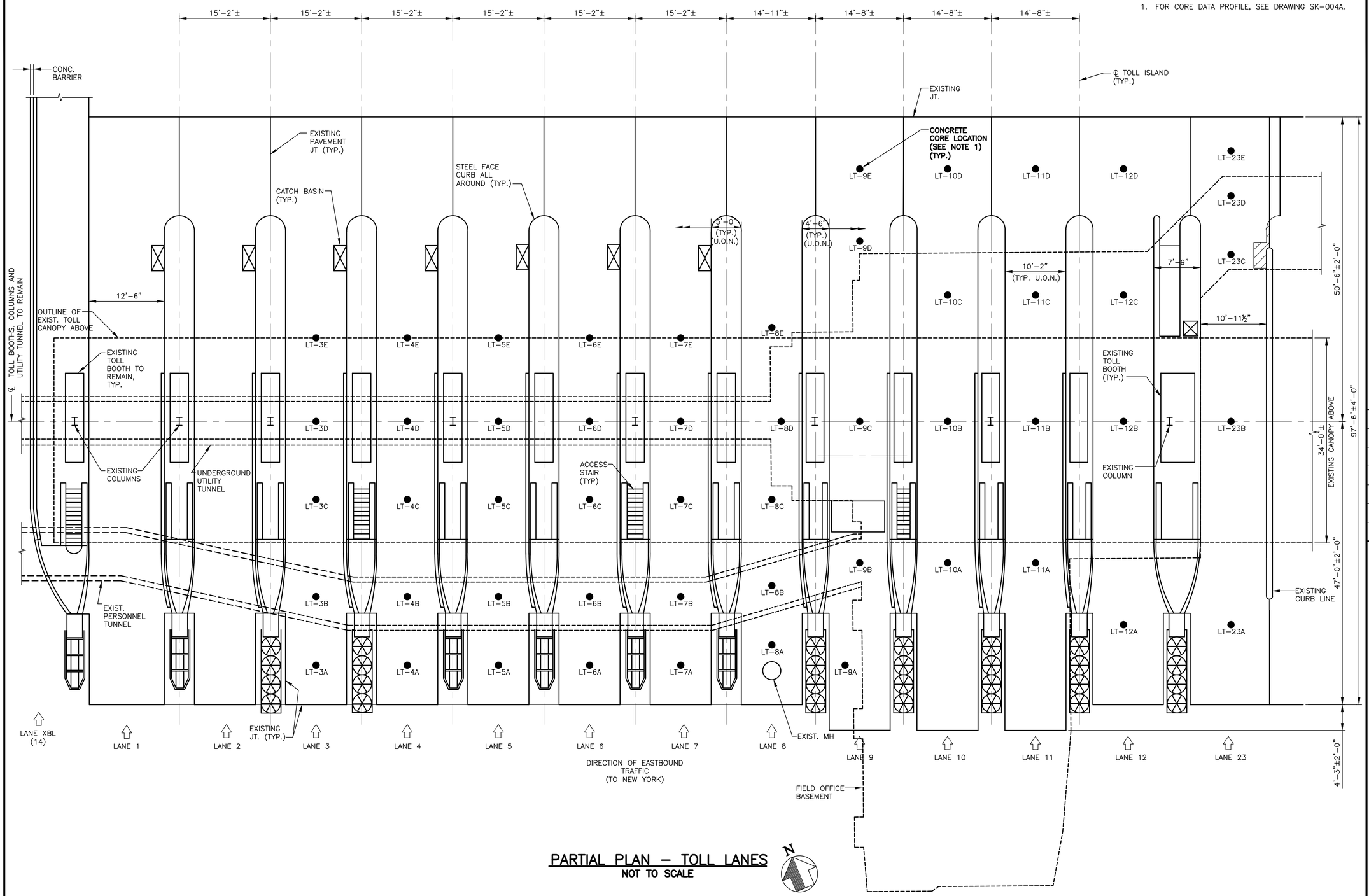

PARTIAL PLAN – TOLL LANES

NOT TO SCALE

Sheet of

THE PORT AUTHORITY
OF NY & NJ

No.	Date	Revision	Approved

ENGINEERING DEPARTMENT

MULTI FACILITY

STRUCTURAL

Title

DESIGN AND IMPLEMENTATION OF REPLACEMENT TOLL COLLECTION SYSTEM

LINCOLN TUNNEL
TOLL LANE SLAB PLAN

CORE LOCATION PLAN

Drawing Number SK-004

CORE DATA PROFILES AT LINCOLN TUNNEL (EXISTING CONDITIONS)

FACILITY	CORE ID	TOLL LANE LOCATION	OVERLAY DEPTH (IN INCHES)	WATERPROOFING MEMBRANE DEPTH (IN INCHES)	MEMBRANE TYPE	REINFORCED CONCRETE STRUCTURAL SLAB DEPTH (IN INCHES)	TUNNEL ROOF SLAB DEPTH (IN INCHES)	TOTAL DEPTH (IN INCHES)
LT	LT–3A	3	---	NONE	NONE	15.38	---	15.38
LT	LT–3B	3	6.87	0.13	EPOXY	---	11.50	18.50
LT	LT–3C	3	---	NONE	NONE	18.00	---	18.00
LT	LT–3D	3	8.00	0.13	EPOXY	---	8.25	16.38
LT	LT–3E	3	---	NONE	NONE	15.75	---	15.75
LT	LT–4A	4	---	NONE	NONE	17.75	---	17.75
LT	LT–4B	4	5.50	0.13	EPOXY	---	NOT SAMPLED	---
LT	LT–4C	4	---	NONE	NONE	16.00	---	16.00
LT	LT–4D	4	7.75	0.13	EPOXY	---	NOT SAMPLED	---
LT	LT–4E	4	---	NONE	NONE	15.25	---	15.25
LT	LT–5A	5	---	NONE	NONE	15.50	---	15.50
LT	LT–5B	5	6.75	0.13	EPOXY	---	NOT SAMPLED	---
LT	LT–5C	5	---	NONE	NONE	16.00	---	16.00
LT	LT–5D	5	7.50	0.13	EPOXY	---	NOT SAMPLED	---
LT	LT–5E	5	---	NONE	NONE	16.00	---	16.00
LT	LT–6A	6	---	NONE	NONE	15.75	---	15.75
LT	LT–6B	6	6.75	0.13	EPOXY	---	NOT SAMPLED	---
LT	LT–6C	6	---	NONE	NONE	16.00	---	16.00
LT	LT–6D	6	7.25	0.13	EPOXY	---	NOT SAMPLED	---
LT	LT–6E	6	---	NONE	NONE	16.50	---	16.50
LT	LT–7A	7	---	NONE	NONE	18.00	---	18.00
LT	LT–7B	7	8.00	0.13	EPOXY	---	12.00	20.13
LT	LT–7C	7	---	NONE	NONE	19.75	---	19.75
LT	LT–7D	7	8.00	0.13	EPOXY	---	8.25	16.38
LT	LT–7D	7	---	NONE	NONE	15.63	---	15.63
LT	LT–8A	8	---	NONE	NONE	16.25	---	16.25
LT	LT–8B	8	5.75	0.13	EPOXY	---	NOT SAMPLED	---
LT	LT–8C	8	---	NONE	NONE	16.25	---	16.25
LT	LT–8D	8	7.87	0.13	EPOXY	---	NOT SAMPLED	---
LT	LT–8E	8	---	NONE	NONE	18.50	---	18.50
LT	LT–9A	9	---	NONE	NONE	14.00	---	14.00
LT	LT–9B	9	7.75	0.13	EPOXY	---	NOT SAMPLED	---
LT	LT–9C	9	7.75	0.13	EPOXY	---	NOT SAMPLED	---
LT	LT–9D	9	---	NONE	NONE	14.00	---	14.00
LT	LT–9E	9	---	NONE	NONE	13.25	---	13.25
LT	LT–10A	10	7.50	0.13	EPOXY	---	NOT SAMPLED	---
LT	LT–10B	10	8.00	0.13	EPOXY	---	NOT SAMPLED	---
LT	LT–10C	10	6.50	0.13	EPOXY	---	NOT SAMPLED	---
LT	LT–10D	10	---	NONE	NONE	14.25	---	14.25
LT	LT–11A	11	8.50	0.13	EPOXY	---	NOT SAMPLED	---
LT	LT–11B	11	8.38	0.13	EPOXY	---	NOT SAMPLED	---
LT	LT–11C	11	7.87	0.13	EPOXY	---	NOT SAMPLED	---
LT	LT–11D	11	---	NONE	NONE	14.38	---	14.38
LT	LT–12A	12	---	NONE	NONE	16.25	---	16.25
LT	LT–12B	12	8.25	0.13	EPOXY	---	NOT SAMPLED	---
LT	LT–12C	12	7.50	0.13	EPOXY	---	NOT SAMPLED	---
LT	LT–12D	12	---	NONE	NONE	14.25	---	14.25
LT	LT–23A	23	---	NONE	NONE	16.00	---	16.00
LT	LT–23B	23	---	NONE	NONE	16.00	---	16.00
LT	LT–23C	23	8.00	0.13	EPOXY	---	NOT SAMPLED	---
LT	LT–23D	23	6.75	0.13	EPOXY	---	NOT SAMPLED	---
LT	LT–23E	23	---	NONE	NONE	10.75	---	10.75

NOTES:
1. FOR CORE LOCATION PLAN, SEE DRAWING SK–004

Sheet of

THE PORT AUTHORITY
OF NY & NJ

No.	Date	Revision	Approved

ENGINEERING DEPARTMENT

MULTI
FACILITY

STRUCTURAL

Title
DESIGN AND IMPLEMENTATION OF REPLACEMENT TOLL COLLECTION SYSTEM

LINCOLN TUNNEL
LOWER LEVEL

CORE DATA PROFILE

Drawing Number SK-004A