INTERNAL USE ONLY	REF. NO. 番号	DESCRIPTION 名称	DRG. NO. 図面番号	MATERIAL 材料	PCS/SET 1組分数	WEIGHT 重量 単	WEIGHT 重量 計	REMARKS 記事	REV. MARK 改訂記号
	1	JACKING PAD ジャッキ受		SM490B	4	1.6.326 (2.253)	(21.012)	PAN-J-1020	
	2	DO. 〃		DO.	4	8.492 (8.852)	33.968 (35.408)	DO.	
	3	GUSSET ガセット		DO.	8	2.671 (3.121)	18.968 (20.968)	DO. (0.35"(9))	
	4	LINER ライナ		DO.	4	15.848 (7.187)	63.392 (28.748)	t 1.97"(50) DO.	
	①	HEX. HD. BOLT 3/4-10UNC x 5½"(140) ボ		CARBON STEEL S43C	8	2.035 (0.923)	16.280 (7.384)	GALVANIZED (HFZnⅡ-C) SAE J4294 Grade 5	
	②	HEX. NUT 3/4-10UNC ナ		CARBON STEEL S43C	8	0.779 (0.081)	1.632 (0.648)	GALVANIZED (HFZnⅡ-C) SAE J995 Grade 5	
	③	SP. LOCK WASHER 3/4 バネザ		CARBON STEEL SWRH62	8	0.044 (0.020)	0.352 (0.160)	GALVANIZED (HFZnⅡ-C) SAE J4896	

WEIGHT TOTAL : 181.511 LBS. (82.328 kg)

NOTE

1. WELDING PROCEDURE SHALL BE IN ACCORDANCE WITH THE APPROPRIATE PART OF THE WELDING MANUAL PAN-J-1063 (LATEST VERSION)

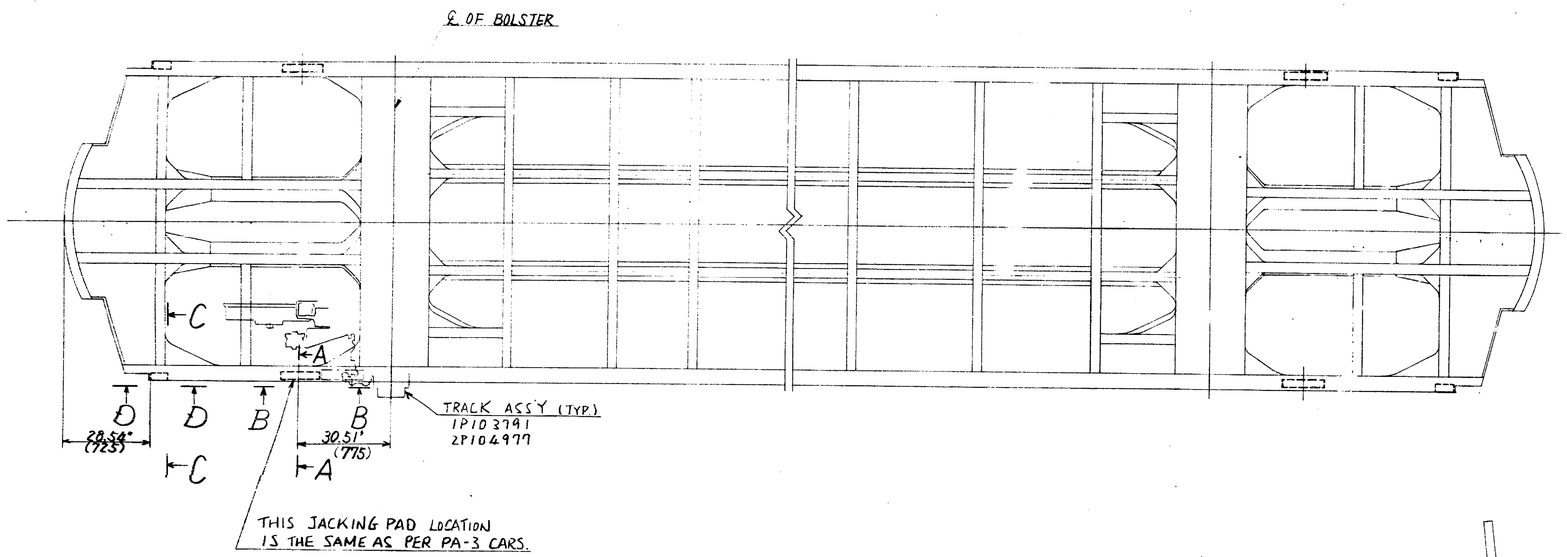

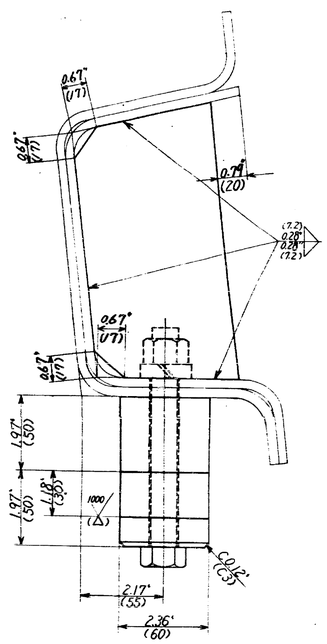

SECTION A-A

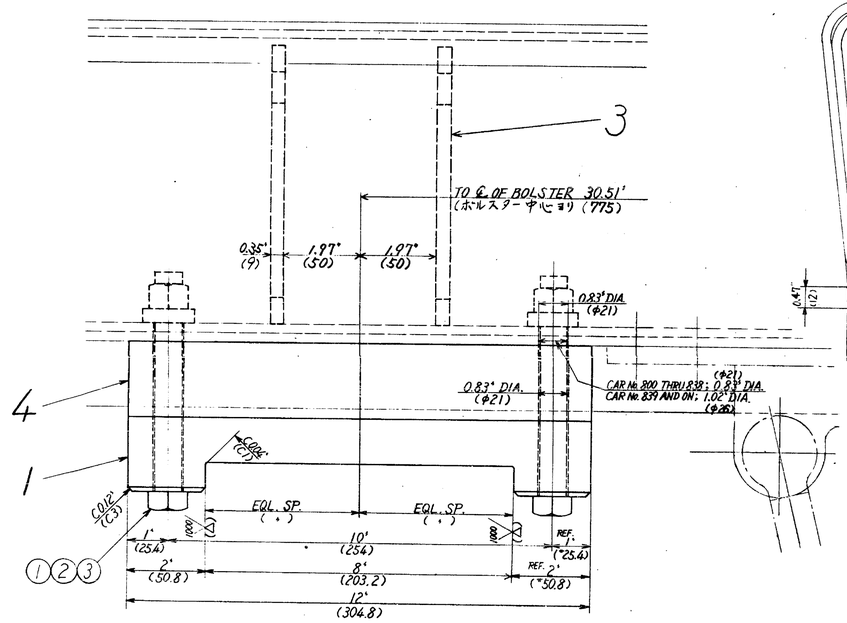

VIEW B-B

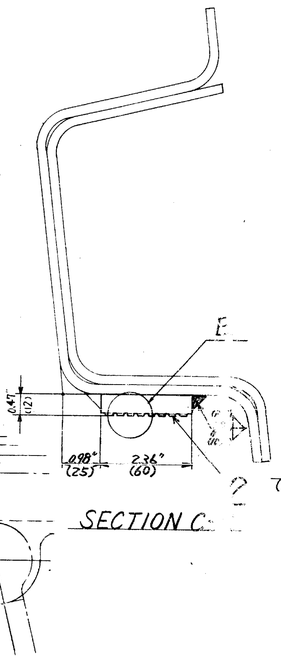

SECTION C-C

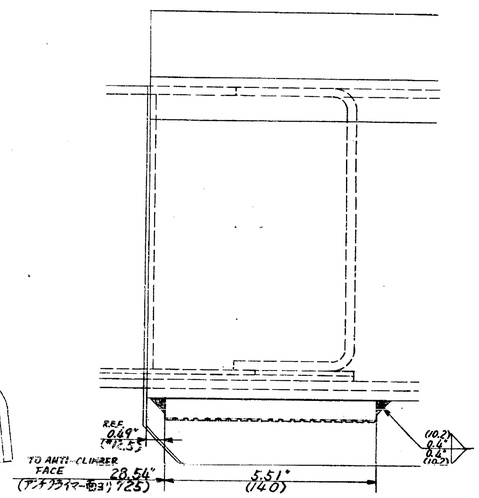

SECTION D-D

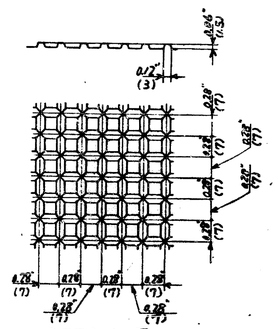

DETAIL E

AS BUILT DRAWING
REVIEWED AND CONFIRMED BY LTK

Reviewer R. Hirata ... Date 2/20/86

UNLESS OTHERWISE SPECIFIED
TOLERANCE OF DIMENSIONS
0.12"~0.24" (3~ 6) ±.01" (0.2)
0.24"~1.20" (6~ 30) ±.02" (0.5)
1.20"~4.70" (30~ 120) ±.03" (0.8)
4.70"~12.5" (120~ 315) ±.05" (1.2)
12.5"~40.0" (315~1000) ±.08" (2.0)
40.0"~80.0" (1000~2000) ±.12" (3.0)
OVER 80.0" (2000~) ±.25" (6.0)
ANGLES ± 1°
DRILLED HOLE DIA. TOLERANCES
0.12"~0.24" (3~ 6) +0.006" (0.15), -0
0.24"~0.47" (6~12) +0.010" (0.25), -0
0.47"~0.98" (12~25) +0.012" (0.30), -0
0.98"~1.97" (25~50) +0.016" (0.40), -0

UNDER FRAME	6P390251
NEXT ASSY.	DWG NO.
APPLICATION	

e	'86.07.18	EFECTIVITY : CAR No. 839 AND ON
d	'86.07.18	ADDED REF. No. 6 & CHANGED LENGTH OF BOLT
c	'86.01.30	ADDED NOTE.
b	'85.9.23	CHANGED DIMENSION.
a	'85.7.17	CHANGED DIMENSION.

B/M DATE 1985-6-18
B/E APPROVED
A. Kawashima
Y. Takahashi
M. Katayama

川崎重工 車両事業部 KOBE, JAPAN
KAWASAKI HEAVY INDUSTRIES, LTD.
ROLLING STOCK DIVISION
TITLE ジャッキウケトリツケ
LOCATION OF JACKING PAD

e	R142M34	PATH(PA-4)				
c	R142M32	PATH(PA-4)				

図番 DRG. NO. 1P393198-1090-e

FOR SCALE 1/2, 1/2

CONTRACT PAT 120.007 PA-4 CARS

図面	完成作成年月日	装置名		装置別	411-5
経歴		関連図面		コード	

番 1

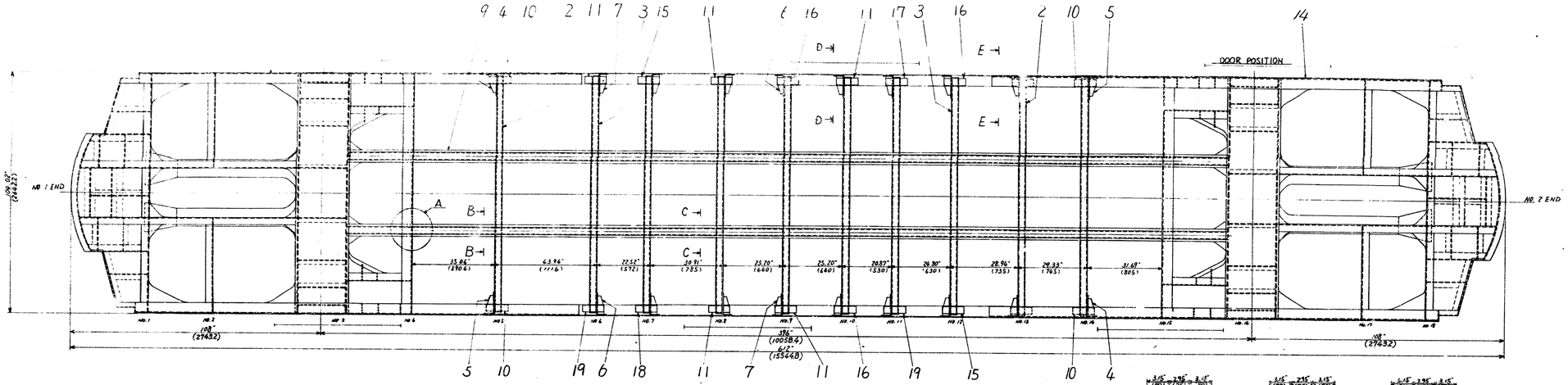

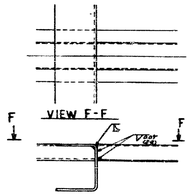

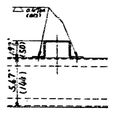

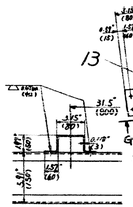

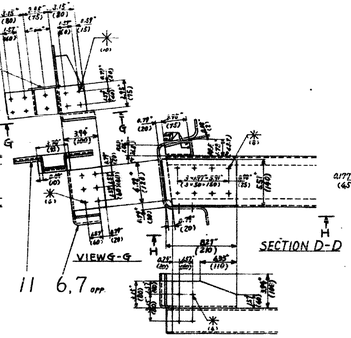

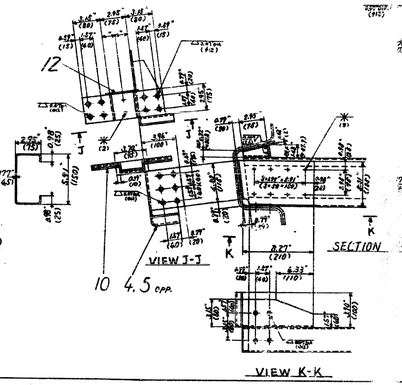

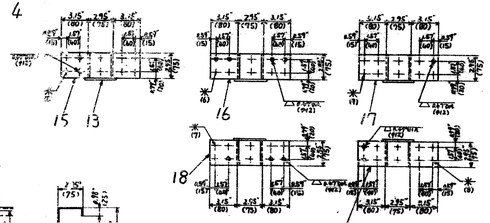

	END UNDERFRAME			ASS'Y	1						
2	CROSS BEAM			SUB-ASS'Y	1						
3	DO			DO							
4	BRACKET			DO	3						
5	DO			DO	3						
6	DO			DO	1						
7	DO			DO	1						
9	PIPE SUPPORT			SUB-ASS'Y	2						
10	BRACKET			DO	6						
11	DO			DO	5						
12	DO			DO	4						
13	DO			DO	12						
14	END UNDERFRAME	SPUNDES	SHELL	ASS'Y	1						
15	BRACKET			SUB-ASS'Y	2						
16	DO			DO	3						
17	DO			DO	1						
18	DO			DO	1						
19	DO			DO	2						

WEIGHT 6012.283 LBS
TOTAL (2727.607 KG)

NOTE
1 WELDING PROCEDURE SHALL BE IN ACCORDANCE WITH THE APPROPRIATE PART OF THE WELDING MANUAL PAM-3-2037 2033 (LATEST VERSION)

FAR SHELL ASS'Y	4P376747
NEXT ASSY.	DWG. NO.
APPLICATION	

UNDERFRAME

CONTRACT PAT 120.007 PA-4 CARS

ITEM 番号	ITEM CODE 品目コード	ITEM NAME 名称	NO'TY REQ'D 員数	MATERIAL 材質		WEIGHT (LBS) 重量(kg) PER PIECE 単重	TOTAL 総重	DESCRIPTION 記事
1	50061-03511	JACKING PAD ASSY-SIDE 側ジャッキ受取付	4	ASSY	組立品	5.82	(2.64)	ASSY
2	60096-03503	LIFTING PAD 吊上金	4		SMA570PQ	25.34	(11.35)	11.97" (150)
3		BLANK (6)						

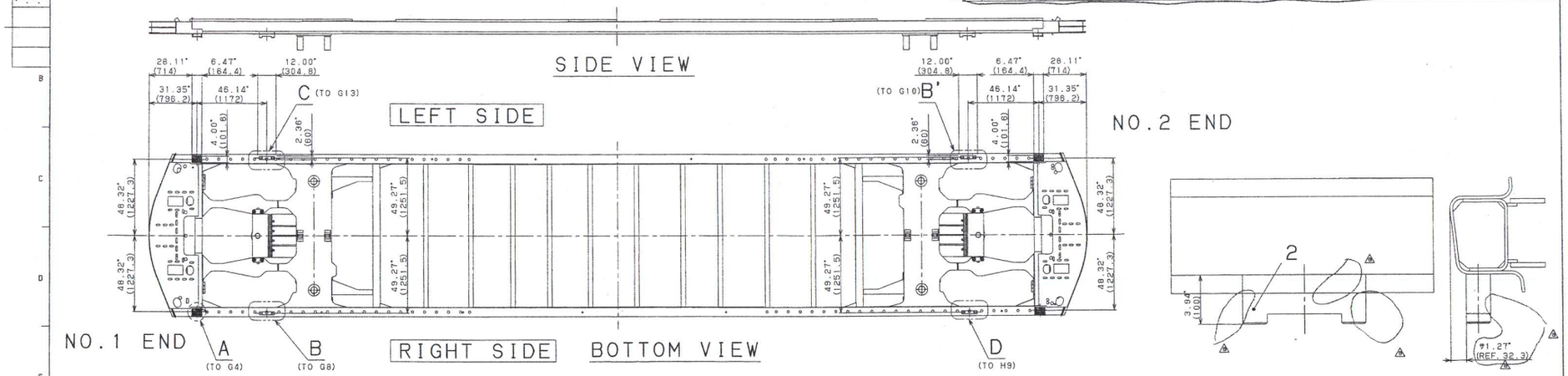

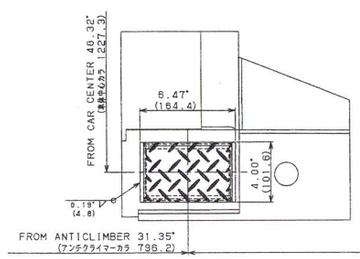

DETAIL A (TYPICAL)
(SCALE 1:4) (FROM E2)

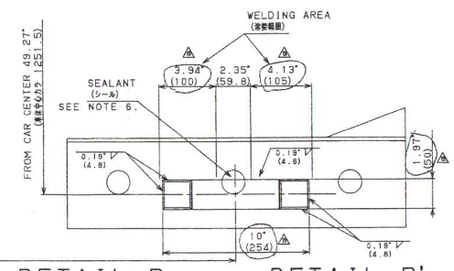

DETAIL B (AS SHOWN)
(SCALE 1:4) (FROM E3)

DETAIL B'
(ROTATED 180°) (FROM B10)

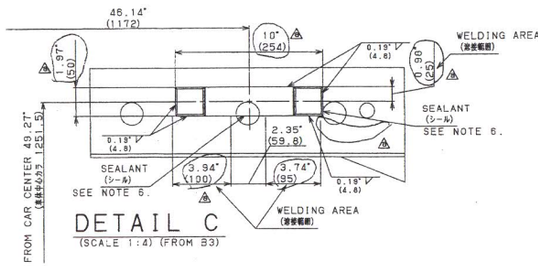

DETAIL C
(SCALE 1:4) (FROM B3)

DETAIL D
(OPPOSITE) (FROM E10)

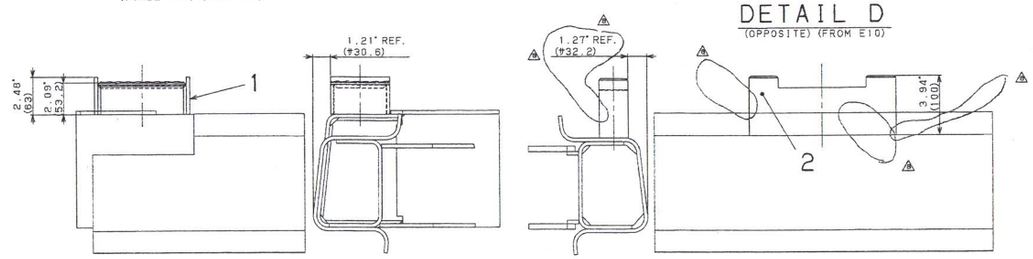

NOTES
1. WELDING FOR LAHT STEEL SHALL BE ACCORDING TO WELDING PROCEDURE PA5-J-2101 (LATEST VERSION, FOR PA-5), UNLESS OTHERWISE SPECIFIED.
2. WELDING FOR STAINLESS STEEL OR STAINLESS STEEL AND OTHER MATERIAL SHALL BE ACCORDING TO WELDING PROCEDURE PA5-J-2201 (LATEST VERSION, FOR PA-5), UNLESS OTHERWISE SPECIFIED.
3. APPLY INSPECTION PROCEDURE PA5-J-3901 (LATEST VERSION, FOR PA-5) TO WELDING INSPECTION.
4. WELDED CARBON STEEL PART TO BE PAINTED IN DUPONT GRAY, COLOR NO.42P-63Q OR 42P-3033 ACCORDING TO PAINTING SPECIFICATION 16602-03501 (LATEST VERSION) AFTER WELDING.
5. EXPOSED SURFACE OF CARBON STEEL TO BE PAINTED IN DUPONT GRAY, COLOR NO.42P-63Q OR 42P-3033 ACCORDING TO PAINTING SPECIFICATION 16602-03501 (LATEST VERSION).
6. SEALANT IS KE-3483-AL (U90111-0011).

注記
1. 特記ナキLAHT鋼ノ溶接ハ溶接要領PA5-J-2101（最新版）ニヨルコト（PA-5ノ場合）。
2. 特記ナキステンレス鋼オヨビステンレス鋼ト異種金属ノ溶接ハ溶接要領PA5-J-2201（最新版）ニヨルコト（PA-5ノ場合）。
3. 溶接検査ハPA5-J-3901（最新版）ニヨルコト（PA-5ノ場合）。
4. 溶接後、炭素鋼材溶接用ワ塗装仕様書16602-03501（最新版）ニヨリ、グレー色（DUPONT COLOR NO.42P-63Q モシクハ42P-3033）ニ塗装ノコト。
5. 炭素鋼材露出部ハ、塗装要領16602-03501（最新版）ニヨリ、グレー色（DUPONT COLOR NO.42P-63Q モシクハ42P-3033）ニ塗装ノコト。
6. シール剤ハ KE-3483-AL (U90111-0011) トスル。

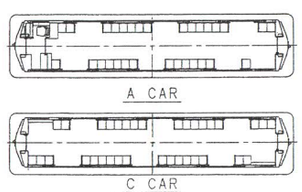

APPLICABLE CAR	SET/CAR	WT/CAR	EFFECTIVITY
A	1	97.52LBS	ALL CARS
C	1	97.52LBS	ALL CARS

No. KAWASAKI HEAVY INDUSTRIES, Ltd. reserve all the rights of this document, including its contents, specifications, and information such as manufacturing data, which is issued in confidence and shall not be carried, reproduced, used, filled for patent application, or disclosed, distributed, nor sold to third parties without prior consent in writ.
この書類の記載ならびに図面に含まれる情報のすべては、川崎重工業株式会社が所有する、当社の了解なく、この内容のコピー、転写、貸与、特許出願、配布、販売等をすってはならない。

UNLESS OTHERWISE SPECIFIED
TOLERANCE OF DIMENSIONS
0.02"~0.24" (0.5~ 6) ±0.005" (0.13)
0.1"~0.24" (3~ 6) ±0.01" (0.3)
0.24"~1.23" (6~ 30) ±0.02" (0.5)
1.23"~4.73" (30~ 120) ±0.03" (0.8)
4.73"~12.5" (120~ 315) ±0.05" (1.3)
12.5"~40.0" (315~1000) ±0.08" (2.0)
40.0"~80.0" (1000~2000) ±0.12" (3.0)
OVER 80.0" (2000~) ±0.25" (6.0)
ANGLES 61°
DRILLED HOLE DIA. TOLERANCES
0.12"~0.24" (3~ 6) +0.005" (0.13) -0
0.24"~0.47" (6~12) +0.010" (0.25) -0
0.47"~0.98" (12~25) +0.012" (0.30) -0
0.98"~1.97" (25~50) +0.018" (0.46) -0

CLASSIFICATION 事業区分	
1	
2	
3	
4	
5	

SCALE 縮尺	1:32, 1:4
MATERIAL 材質	
WEIGHT (LBS) 重量(kg)	
SURFACE TREATMENT 表面処理	PAINT 塗装 (ASW) No See note 4, 5.

REV. 改訂記号	ECO. NO. 変更案 NO.	DESCRIPTION 改訂内容	DATE 改訂日付	DRAWN 製図	CHECKED 審査	APP'D 承認
a	06RC0864	CORRECTED SHAPE OF ITEM NO.2. DELETED ITEM NO.3.	2006.04.26	T.E	Y.T	A.S

REVISIONS 改訂

2006.01.31	川崎重工 KAWASAKI HEAVY INDUSTRIES, LTD. 車両カンパニー KOBE, JAPAN
承認 APPROVED	RAIL CARS DIVISION RAILWAY COMPANY
審査 CHECKED	TITLE JACKING PAD INSTL-SIDE 側ジャッキ受取付
製図 DRAWN	図面番号 DRG. NO. 40031-03507a
仕様書 CFDG. DRG. NO.	特殊図面 CFDG. NO.
生産技術 PRODUCTION ENGINEERING 承認 APPROVED / 審査 CHECKED / 製図 DRAWN	ASSY WEIGHT 97.52 LBS (Solid WG)

PROJECT	SYS. CODE	SER. NO.	REVISION
PA-5	411	401	a

KAWASAKI RAIL CAR INC. JUN 06 2005