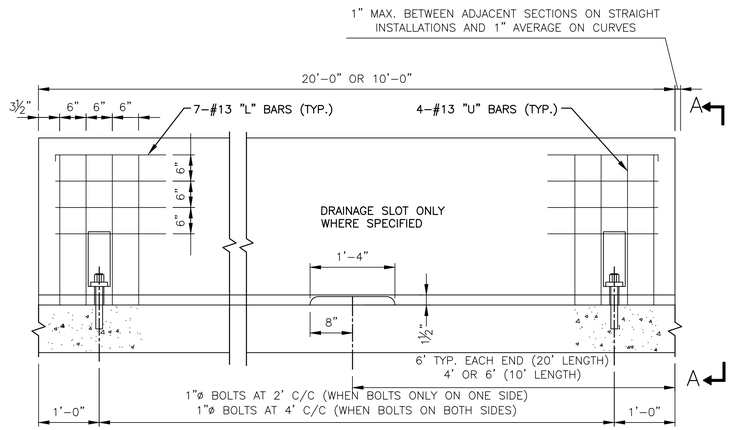

ELEVATION

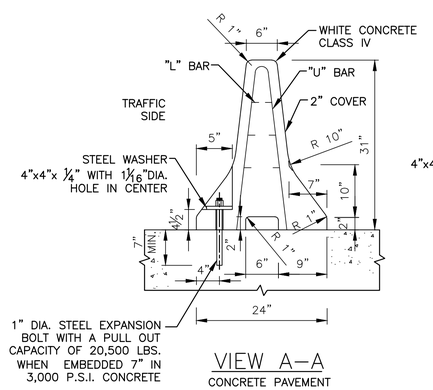

VIEW A–A

CONCRETE PAVEMENT

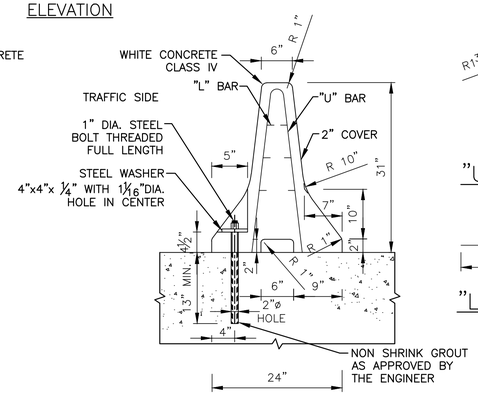

VIEW A–A

BITUMINOUS PAVEMENT

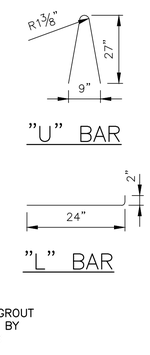

NOTES:

1. THE APPROACH END OF THE PRECAST CONCRETE CONSTRUCTION BARRIER SHOULD BE FLARED AWAY FROM TRAFFIC AT A RATE OF 20:1. WHERE POSTED SPEEDS ARE LESS THAN 50 MPH, A FLARE RATE OF 15:1 MAY BE USED. ON CURVED ROADWAYS, KINKS IN THE BARRIER ALIGNMENT SHOULD BE AVOIDED.
2. REINFORCING SHOWN IS THE MINIMUM REQUIRED. ADDITIONAL REINFORCING NECESSARY FOR HANDLING SHALL BE THE OPTION AND RESPONSIBILITY OF THE CONTRACTOR.
3. IF TRAFFIC WILL BE ON BOTH SIDES OF THE BARRIER, THE CONTRACTOR SHALL PROVIDE BOLT RECESSES SO THE BOLT CAN BE INSTALLED AT 4 FEET C.TO C. ON EACH SIDE. AT THE OPTION OF THE CONTRACTOR BOLT RECESSES AND BOLTS MAY BE PROVIDED AT 4 FEET C. TO C. ON EACH SIDE WHEN TRAFFIC IS ONLY ON ONE SIDE OF THE BARRIER.
4. WHEN THE BARRIER HAS BEEN REMOVED, THE BOLTS SHALL BE REMOVED OR CUT OFF TO A LEVEL OF 1/2" MINIMUM BELOW THE PAVEMENT SURFACE AND THE HOLES SHALL BE FILLED TO THE SATISFACTION OF THE ENGINEER.
5. BOLTS, OTHER THAN EXPANSION BOLTS, SHALL BE THREADED RODS MADE FROM ASTM GRADE 250 STEEL. NUTS SHALL CONFORM TO ASTM A 307.
6. VARIATIONS TO THE DETAILS SHALL BE SUBJECT TO APPROVAL.
7. FOR INSTALLATION ON BRIDGE DECKS, REFER TO BRIDGE PLANS FOR NECESSARY MODIFICATIONS AS REQUIRED.
8. REINFORCING BARS SHALL BE ASTM A615, GRADE 60.

PRECAST CONCRETE CONSTRUCTION BARRIER TYPE 1

N.T.S.

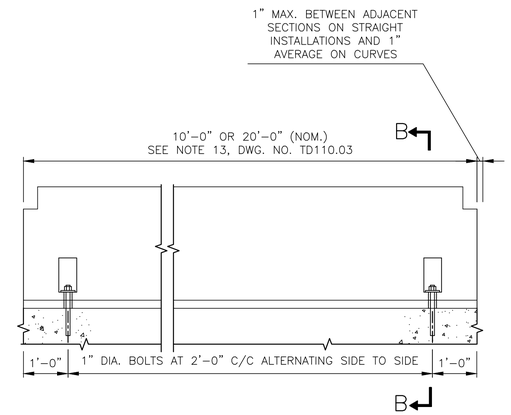

ELEVATION

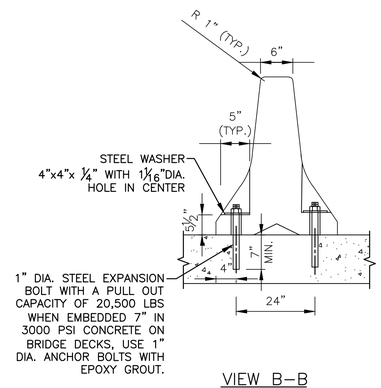

VIEW B–B

CONCRETE PAVEMENT

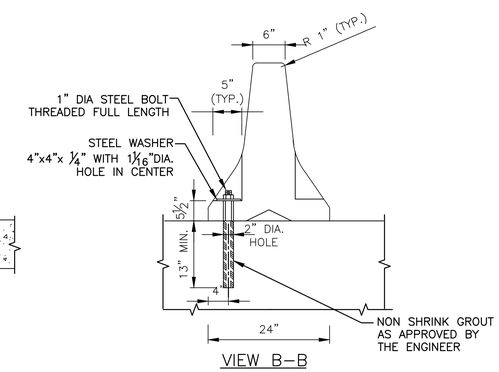

VIEW B–B

HOT MIX ASPHALT (HMA) PAVEMENT

NOTES:

1. BOLTS AND NUTS SHALL CONFORM TO ASTM A 307.
2. BOLTS SHALL BE REQUIRED IN EVERY ANCHOR POCKET HOLE.
3. CONNECTION KEY SHALL BE USED WITH TYPE 1 APPLICATION.
4. WHEN BARRIER HAS BEEN REMOVED, THE BOLTS SHALL BE REMOVED OR CUT OFF TO A LEVEL OF 1/2" MINIMUM BELOW THE SURFACE AND THE HOLE FILLED TO THE SATISFACTION OF THE ENGINEER.
5. FOR PRECAST CONCRETE CONSTRUCTION BARRIER TYPE 4 (ALTERNATE B) DETAILS SEE DRAWING TD110.03.

ANCHORAGE DETAIL FOR TYPE 4 BARRIER USED FOR TYPE 1

N.T.S.

Sheet of

THE PORT AUTHORITY OF NY & NJ

CHIEF

No.	Date	Revision	Approved

ENGINEERING DEPARTMENT

PANYNJ Traffic Standard Details

TRAFFIC

Title

TEMPORARY BARRIER

PRECAST CONCRETE CONSTRUCTION BARRIER TYPE 1

This drawing subject to conditions in contract. All inventions, ideas, designs and methods herein are reserved to Port Authority and may not be used without its written consent.
All recipients of Contract documents, including bidders and those who do not bid and their prospective subcontractors and suppliers who may receive all or a part of the Contract documents or copies thereof, shall make every effort to ensure the secure and appropriate disposal of the Contract documents to prevent further disclosure of the information contained in the documents. Secure and appropriate disposal includes methods of document destruction such as shredding or arrangements with refuse handlers that ensure that third persons will not have access to the documents' contents either before, during, or after disposal. Documents may also be returned for disposal purposes to the Contract Desk on the 3rd Floor, 3 Gateway Center, Newark NJ 07102 or the office of the Director of Procurement, One Madison Avenue, 7th Floor, New York NY 10010.
It is a violation of law for any person to alter a document in any way, unless acting under the direction of a licensed professional engineer or registered architect. If this document bearing the seal of an engineer/architect is altered, the altering engineer/architect shall affix to the document their seal and the notation "altered by" followed by their signature and the date of such alteration, and a specific description of the alteration.

Designed by	Drawn by	Checked by

Date **11/01/2010**

Contract Number

Drawing Number **TD110.01**

PID#

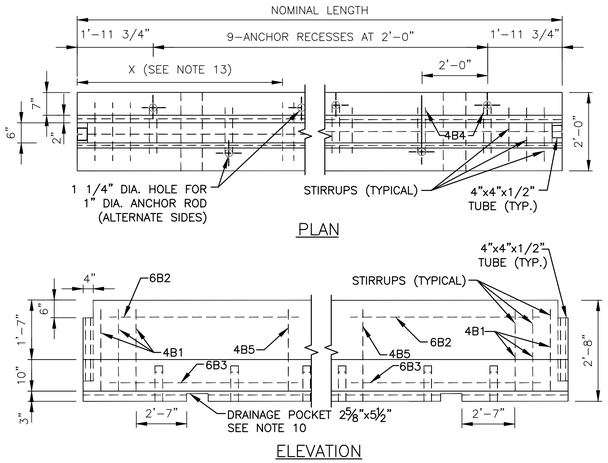

PRECAST CONCRETE BARRIER TYPE 4 ALTERNATE A

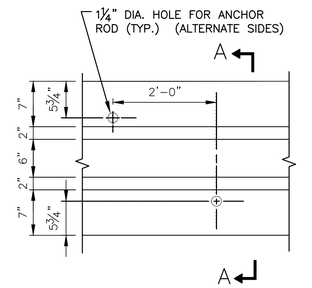

PLAN–ANCHOR RECESS

JOINT AND ANCHORAGE TREATMENTS		
JOINT CLASS	ALLOWABLE MOVEMENT	JOINT TREATMENT
A	OVER 16"	CONNECTION KEY ONLY
B	11" TO 16"	CONNECTION KEY & GROUT
C	LESS THAN 11"	CONNECTION KEY & MORTAR, IN EVERY JOINT & PIN EVERY OTHER UNIT, IN UNITS THAT ARE TO BE ANCHORED PINS SHALL BE REQUIRED IN EVERY ANCHOR RECESS
D*		CONNECTION KEY AND GROUT EVERY JOINT, BOLT EVERY ANCHOR POCKET HOLE IN EVERY UNIT.

* ONLY FOR ALTERNATE B

GENERAL NOTES:

1. STEEL PLATE SHALL BE ASTM A36M, A572M, GRADE 345 OR A588M.
2. REINFORCING BARS SHALL BE ASTM A615, GRADE 60.
3. CONCRETE FOR TRAFFIC BARRIER SHALL BE WHITE IN COLOR BY CONTAINING A BLEND OF WHITE CEMENT AND EITHER GRANULATED BLAST FURNACE SLAG OR METAKAOLIN, AND SHALL CONFORM TO SPECIFICATION SECTIONS 03300 AND 03301, PERFORMANCE CATEGORY IV, WITH A 28-DAY DESIGN COMPRESSIVE STRENGTH OF 4000 PSI. WHITE CONCRETE SHALL CONSIST OF WHITE PORTLAND CEMENT, TYPE I CONFORMING TO ASTM C150. ALSO THE WHITE CEMENT SHALL NOT CONTAIN MORE THAN .55% BY WEIGHT OF FERRIC OXIDE (Fe_2O_3).
4. CONCRETE CLEAR COVER FOR REINFORCING BARS SHALL BE 1 1/2" (MIN).
5. A MINIMUM OF (2) TWO RECESSED LIFTING DEVICES SHALL BE USED ON EACH SECTION. EACH LIFTING DEVICE SHALL HAVE A MINIMUM CAPACITY OF 6 TONS.
6. TUBE STEEL SHALL BE ASTM A500, GRADE B OR C.
7. ANCHOR RODS SHALL BE 1" DIA. ASTM A36.
8. ANCHOR RODS ARE NOT REQUIRED IN EVERY UNIT. SEE TABLE OF JOINT TREATMENTS BELOW.
9. ALL END SECTIONS SHALL BE PINNED UNLESS OTHERWISE NOTED.
10. 2 5/8" x 5 1/2" DRAINAGE POCKETS – ONE REQUIRED FOR 8' AND 10' LENGTHS, TWO OTHERWISE.
11. AFTER A BARRIER UNIT HAS BEEN PLACED AND THE CONNECTION KEY INSERTED, REMOVE ANY SLACK IN THE JOINT BY PULLING THE UNIT IN A DIRECTION PARALLEL TO ITS LONGITUDINAL AXIS.
12. THE PRECAST CONCRETE CONSTRUCTION BARRIER SHALL BE CAST IN STEEL FORMS.
13. THE TEMPORARY CONCRETE CONSTRUCTION BARRIER SHALL BE PRECAST UNITS OF ONE OF THE FOLLOWING NOMINAL LENGTHS 8', 10', 12', 14', 16', 18' AND 20'. HOWEVER OTHER LENGTHS MAY BE USED TO MEET FIELD CONDITIONS, THE NUMBER AND PLACEMENT OF THE 4B4 AND 4B5 BARS WILL VARY WITH THE LENGTH OF THE BARRIER UNIT AS SHOWN ON THE TABLE OF VARIABLE BARS (SEE DETAIL TD110.03.03), THE 6B2 AND 6B3 BARS SHALL BE 10" SHORTER THAN THE NOMINAL LENGTH OF THE BARRIER UNITS.
14. REINFORCING SHOWN IS THE MINIMUM REQUIRED. ADDITIONAL REINFORCING NECESSARY FOR HANDLING SHALL BE THE OPTION AND REPONSIBILITY OF THE CONTRACTOR.
15. WELDING AND FABRICATION OF STEEL STRUCTURES SHALL BE IN ACCORDANCE WITH SECTIONS 1 THRU 6 OF THE ANSI/AASHTO/AWS D1.5 BRIDGE WELDING CODE AND SECTION 10 OF THE ANSI/AWS D.1 STRUCTURAL WELDING CODE. SURFACES TO BE WELDED SHALL BE FREE OF SCALE, SLAG, RUST, MOISTURE, GREASE, OR ANY OTHER MATERIAL THAT WILL PREVENT PROPER WELDING OR PRODUCE OBJECTIONAL FUMES. WELDING SHALL BE SHIELDED METAL ARC WELDING USING PROPERLY DRIED 5/32" DIA. E7018 ELECTRODES..
16. AFTER REMOVAL OF THE BARRIER, THE HOLES IN THE SURFACE ON WHICH THE BARRIER SAT WHICH WERE USED TO ANCHOR THE SYSTEM, SHALL BE FILLED. THE ONLY EXCEPTION IS WHEN THE HOLES ARE IN AN AREA WHICH IS TO BE REMOVED. HOLES IN FLEXIBLE PAVEMENT, OR UNPAVED AREAS SHALL BE FILLED AS DIRECTED. HOLES IN PORTLAND CEMENT CONCRETE PAVEMENTS, OR STRUCTURAL DECKS, SHALL BE FILLED WITH NONSHRINK GROUT MATERIAL MEETING THE SPECIFICATION REQUIREMENTS, EXCEPT THAT IN LATEX MODIFIED CONCRETE BRIDGE DECK, A COMPATIBLE NON-SHRINK GROUT MATERIAL SHALL BE USED.
17. ONLY THE TYPE 4 ALTERNATE B, JOINT CLASS D SHALL BE USED AS BRIDGE PARAPETS.
18. TOLERANCES SHALL BE SHOWN ON THE VARIOUS DETAILS; WHERE NOT SPECIFIED AS FOLLOWS: CROSS-SECTIONAL DIMENSIONS SHALL NOT VARY FROM THE DIMENSIONS SHOWN BY MORE THAN 1/4 INCH. LONGITUDINAL DIMENSIONS SHALL NOT VARY FROM THE DIMENSION BY MORE THAN 1/4 INCH PER 10 FOOT OF BARRIER SECTION. LOCATION OF ANCHORING DEVICES SHALL NOT VARY BY MORE THAN 1/2 INCH SURFACE STRAIGHTNESS, WHEN CHECKED WITH A 10 FOOT STRAIGHT EDGE SHALL NOT BE EXHIBIT IRREGULARITIES EXCEEDING 1/4 INCH.
19. FOR REINFORCEMENT AND JOINT CONNECTION, SEE DETAILS TD110.03.01, TD110.03.02 AND TD110.03.03.
20. THE APPROACH END OF THE PRECAST CONCRETE CONSTRUCTION BARRIER SHOULD BE FLARED AWAY FROM TRAFFIC AT A RATE OF 20:1. WHERE POSTED SPEEDS ARE LESS THAN 50 MPH, A FLARE RATE OF 15:1 MAY BE USED. ON CURVED ROADWAYS, KINKS IN THE BARRIER ALIGNMENT SHOULD BE AVOIDED.

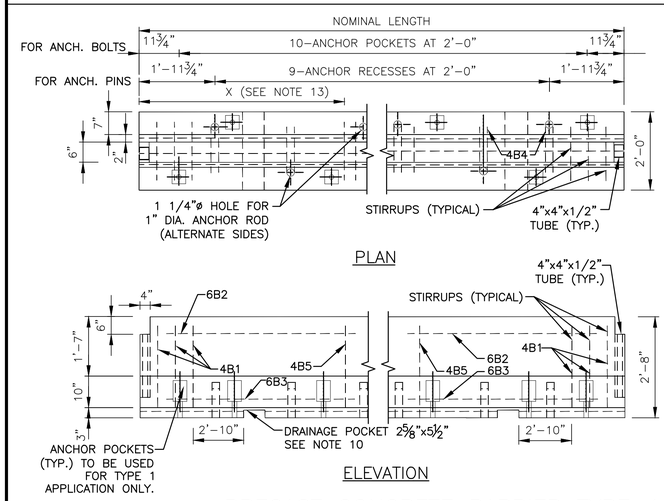

PRECAST CONCRETE BARRIER TYPE 4 ALTERNATE B

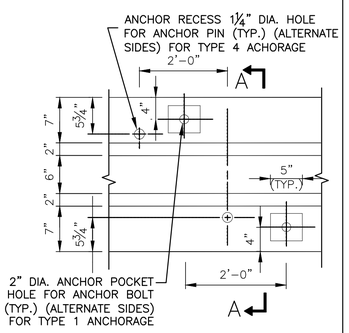

PLAN–ANCHOR RECESS

NOTE A: THE LENGTH OF THE ANCHOR RODS SHALL BE SUCH THAT THE FOLLOWING MINIMUM EMBEDMENT LENGTHS ARE OBTAINED:

a) INTO PORTLAND CEMENT CONCRETE PAVEMENTS 0'-5".

b) INTO FLEXIBLE PAVEMENT 1'-6"

c) INTO UNPAVED AREA 2'-6"

WHEN ANCHOR RODS ARE IN PLACE, THEY SHALL NOT PROJECT ABOVE THE PLANE OF THE CONCRETE SURFACE OF THE BARRIER.

HOLES IN BRIDGE DECKS SHALL BE 1 1/4" ø MAXIMUM AND MADE WITH A CORE DRILL OR ANY OTHER APPROVED ROTARY DRILLING DEVICE THAT DOES NOT IMPART AN IMPACT FORCE.

NOTE B: IN UNITS THAT ARE TO BE ANCHORED, PINS SHALL BE REQUIRED IN EVERY ANCHOR RECESS.

NOTE C: FOR INSTALLATION ON BRIDGE DECKS REFER TO BRIDGE CONTRACT DRAWINGS FOR NECESSARY MODIFICATIONS AS REQUIRED AND GENERAL NOTE 16 (ALTERNATE A) OR GENERAL NOTES 16 AND 17 (ALTERNATE B).

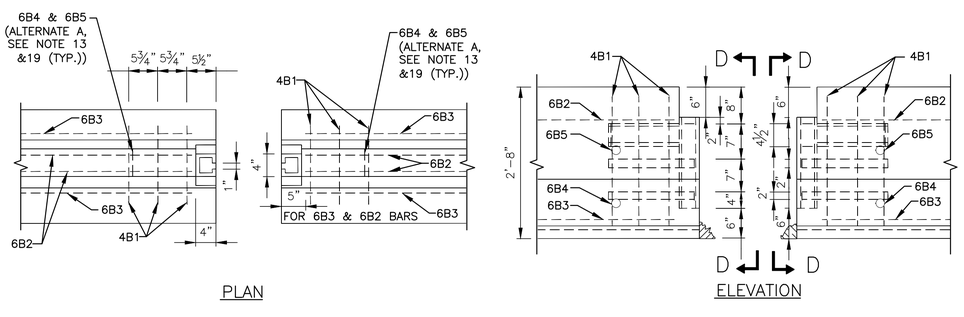

BARRIER AT JOINT

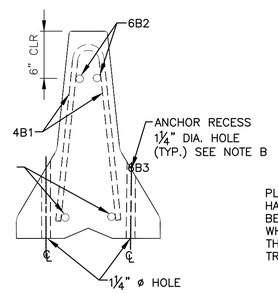

SECTION A–A

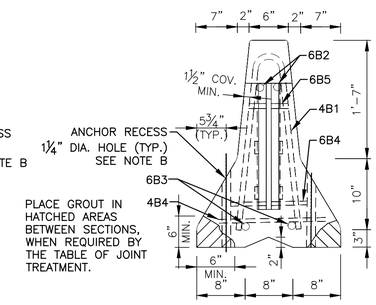

SECTION D–D

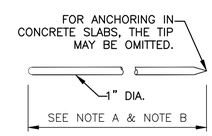

ANCHOR ROD/PIN

Sheet of

THE PORT AUTHORITY OF NY & NJ

CHIEF

No.	Date	Revision	Approved

ENGINEERING DEPARTMENT

PANYNJ Traffic Standard Details

TRAFFIC

Title

TEMPORARY BARRIER

PRECAST CONCRETE CONSTRUCTION BARRIER TYPE 4 (ALTERNATES A AND B)

This drawing subject to conditions in contract. All inventions, ideas, designs and methods herein are reserved to Port Authority and may not be used without its written consent.
All recipients of Contract documents, including bidders and those who do not bid and their prospective subcontractors and suppliers who may receive all or a part of the Contract documents or copies thereof, shall make every effort to ensure the secure and appropriate disposal of the Contract documents to prevent further disclosure of the information contained in the documents. Secure and appropriate disposal includes methods of document destruction such as shredding or arrangements with refuse handlers that ensure that third persons will not have access to the documents' contents either before, during, or after disposal. Documents may also be returned for disposal purposes to the Contract Desk on the 3rd Floor, 3 Gateway Center, Newark NJ 07102 or the office of the Director of Procurement, One Madison Avenue, 7th Floor, New York NY 10010.
It is a violation of law for any person to alter a document in any way, unless acting under the direction of a licensed professional engineer or registered architect. If this document bearing the seal of an engineer/architect is altered, the altering engineer/architect shall affix to the document their seal and the notation "altered by" followed by their signature and the date of such alteration, and a specific description of the alteration.

Designed by Drawn by Checked by

Date **11/01/2010**

Contract Number

Drawing Number **TD110.02**

PID#

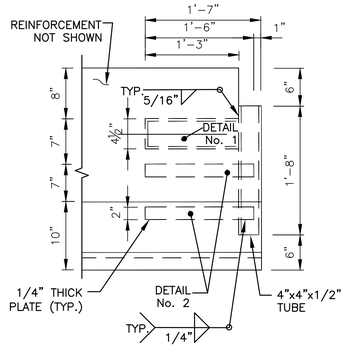

ELEVATION

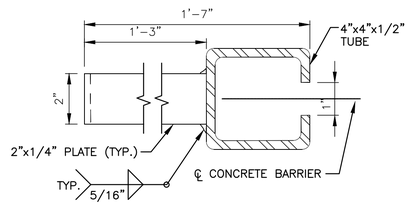

PLAN VIEW

DETAIL NO. 1

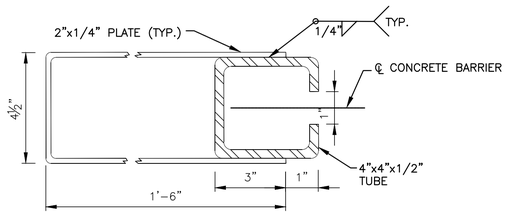

PLAN VIEW

DETAIL NO. 2

JOINT CONNECTION DETAIL

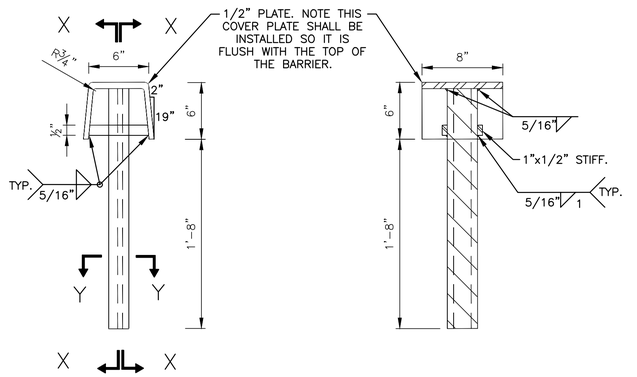

ELEVATION

SECTION X–X

SECTION Y–Y

CONNECTION KEY

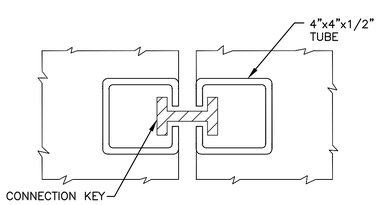

KEY IN PLACE

N.T.S.

NOTES:

1. STEEL PLATE SHALL BE ASTM A36M, A572M, GRADE 345 OR A588M.
2. TUBE STEEL SHALL BE ASTM A500, GRADE B OR C.
3. WELDING AND FABRICATION OF STEEL STRUCTURES SHALL BE IN ACCORDANCE WITH SECTIONS 1 THRU 6 OF THE ANSI/AASHTO/AWS D1.5 BRIDGE WELDING CODE AND SECTION 10 OF THE ANSI/AWS D.1 STRUCTURAL WELDING CODE. SURFACES TO BE WELDED SHALL BE FREE OF SCALE, SLAG, RUST, MOISTURE, GREASE, OR ANY OTHER MATERIAL THAT WILL PREVENT PROPER WELDING OR PRODUCE OBJECTIONAL FUMES. WELDING SHALL BE SHIELDED METAL ARC WELDING USING PROPERLY DRIED 5/32" DIA. E7018 ELECTRODES.
4. FOR WARNING LIGHT AND/OR DELINEATOR ATTACHMENT, IF REQUIRED, SEE DRAWING TD60.04.18 AND TD60.04.23.

PRECAST CONCRETE CONSTRUCTION BARRIER JOINT CONNECTION DETAILS

N.T.S.

TD110.03.01

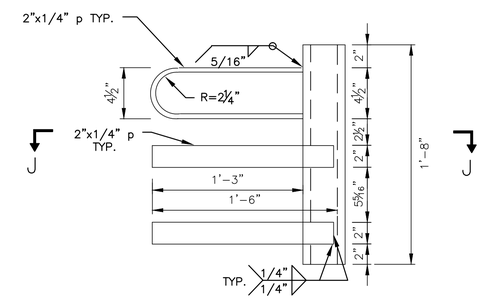

ELEVATION

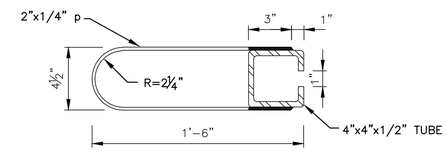

SECTION J–J

ALTERNATE JOINT CONNECTION DETAIL

N.T.S.

TD110.03.02

BARS LIST (EACH BARRIER SECTION)								
MARK	SIZE	NUMBER IN EACH SECTION	LENGTH	TYPE	A	B	C	LOCATION
4B1	4	6	4'–11"	I	5"	26"	2"	STIRRUPS
4B4	4	SEE NOTE 1	3'–1"	II	15.5"	4"		STIRRUPS
4B5	4	SEE NOTE 1	4'–11"	I	5"	26"	2"	STIRRUPS
6B2	6	2	SEE NOTE 1	STR.				LONGITUDINAL (TOP) NORMAL SECTION
6B3	6	2	SEE NOTE 1	STR.				LONGITUDINAL (BOTTOM) NORMAL SECTION
6B4	6	2	1'–2"	STR.				TRANSVERSE (BOTTOM) NORMAL SECTION
6B5	6	2	0'–6"	STR.				TRANSVERSE (TOP) NORMAL SECTION

TABLE OF VARIABLE BARS			
NOMINAL LENGTH OF BARRIER UNIT	MARK	"X"	NO. EACH SECTION
20'	4B4	N.A.	9
20'	4B5	6'–11"	2
18'	4B4	N.A.	8
18'	4B5	6'–5"	2
16'	4B4	N.A.	7
16'	4B5	5'–11"	2
14'	4B4	N.A.	6
14'	4B5	7'–0"	1
12'	4B4	N.A.	5
12'	4B5	6'–0"	1
10'	4B4	N.A.	4
10'	4B5	5'–0"	1
8'	4B4	N.A.	3
8'	4B5	–	0
"X" DISTANCE FROM END OF BARRIER TO 4B5 BAR			

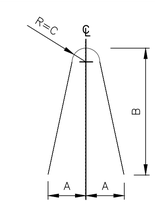

TYPE "I" BAR

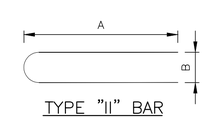

TYPE "II" BAR

PRECAST CONCRETE CONSTRUCTION BARRIER REINFORCEMENT DETAILS

N.T.S.

TD110.03.03

Sheet of

THE PORT AUTHORITY OF NY & NJ

CHIEF

No.	Date	Revision	Approved

ENGINEERING DEPARTMENT

PANYNJ Traffic Standard Details

TRAFFIC

Title

TEMPORARY BARRIER

PRECAST CONCRETE CONSTRUCTION BARRIER TYPE 4 JOINT CONNECTION AND REINFORCEMENT DETAILS

This drawing subject to conditions in contract. All inventions, ideas, designs and methods herein are reserved to Port Authority and may not be used without its written consent.
All recipients of Contract documents, including bidders and those who do not bid and their prospective subcontractors and suppliers who may receive all or a part of the Contract documents or copies thereof, shall make every effort to ensure the secure and appropriate disposal of the Contract documents to prevent further disclosure of the information contained in the documents. Secure and appropriate disposal includes methods of document destruction such as shredding or arrangements with refuse handlers that ensure that third persons will not have access to the documents' contents either before, during, or after disposal. Documents may also be returned for disposal purposes to the Contract Desk on the 3rd Floor, 3 Gateway Center, Newark NJ 07102 or the office of the Director of Procurement, One Madison Avenue, 7th Floor, New York NY 10010.
It is a violation of law for any person to alter a document in any way, unless acting under the direction of a licensed professional engineer or registered architect. If this document bearing the seal of an engineer/architect is altered, the altering engineer/architect shall affix to the document their seal and the notation "altered by" followed by their signature and the date of such alteration, and a specific description of the alteration.

Designed by Drawn by Checked by

Date **11/01/2010**

Contract Number

Drawing Number **TD110.03**

PID#

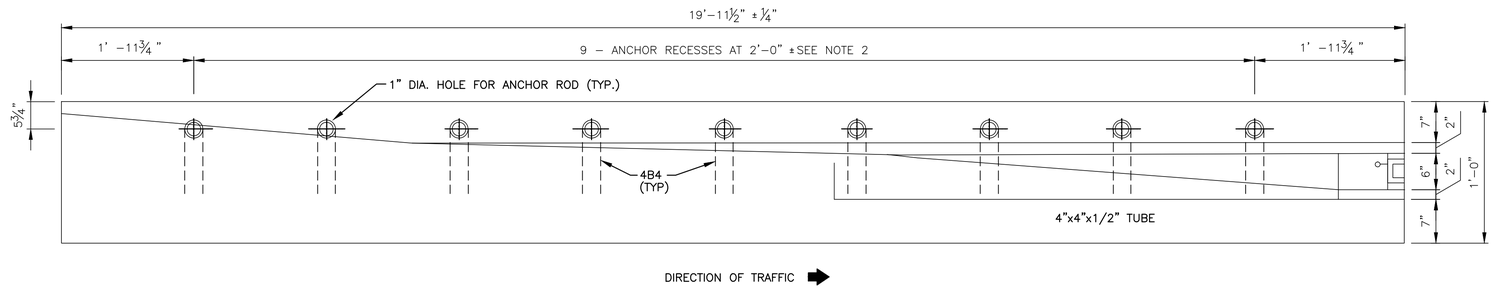

PLAN

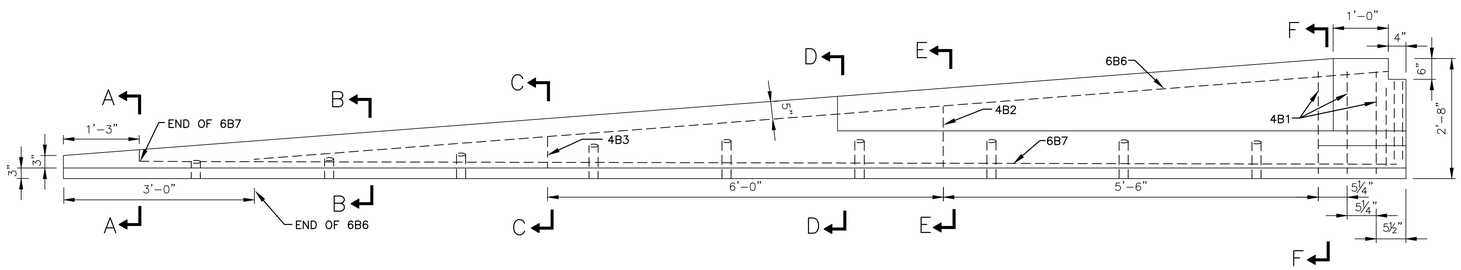

ELEVATION

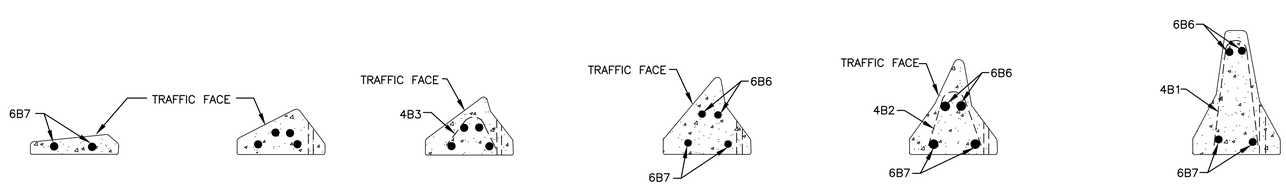

SECTION A–A SECTION B–B SECTION C–C SECTION D–D SECTION E–E SECTION F–F

TRANSITION SECTIONS

NOTES:

1. ALL CORNERS ON THE TOP OF THE SECTION SHALL BE ROUNDED TO A 1.0 INCH RADIUS. THE UNIT SHALL HAVE A SMOOTH TRANSITION FROM THE STANDARD SHAPE TO THE 6 INCH END OF SECTION HEIGHT.
2. ALL END SECTIONS SHALL BE PINNED UNLESS OTHERWISE NOTED.
3. THIS TRANSITION END TREATMENT SHOULD ONLY BE USED:
   - IN LOCATIONS WHERE TRAFFIC SPEED IS LOW, 30 MPH OR LESS.
   - IN LOCATIONS WHERE THE SPACE IS LIMITED BY RIGHT–OF–WAY CONSTRAINTS OR PRESENCE OF OTHER ROADSIDE FEATURES.
   - WHERE END–ON IMPACTS ARE NOT THAT LIKELY.
4. FOR GENERAL NOTES SEE DETAIL TD110.02.

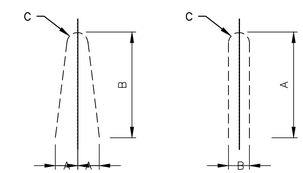

TYPE I BAR TYPE II BAR

BAR LIST							
MARK	SIZE	No.	LENGTH	TYPE	A	B	C
4B1	4	3	4'–5"	I STIRRUP	5"	26"	2"
4B2	4	1	5'–5"	I STIRRUP	5"	13"	2"
4B3	4	1	1'–5"	I STIRRUP	5"	8"	2"
4B4	4	4	5'–1"	II STIRRUP	5 1/2"	4"	
6B6	6	2	16'–7"	LONGITUDINAL TOP			
6B7	6	2	18'–2"	LONGITUDINAL BOTTOM			

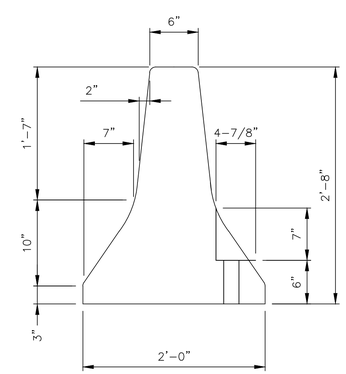

END VIEW

PRECAST CONCRETE CONSTRUCTION BARRIER TAPERED END SECTION

N.T.S.

TD110.04

Sheet of

THE PORT AUTHORITY OF NY & NJ

CHIEF

No.	Date	Revision	Approved

ENGINEERING DEPARTMENT

PANYNJ Traffic Standard Details

TRAFFIC

Title

TEMPORARY BARRIER

PRECAST CONCRETE CONSTRUCTION BARRIER TAPERED END SECTION

This drawing subject to conditions in contract. All inventions, ideas, designs and methods herein are reserved to Port Authority and may not be used without its written consent.
All recipients of Contract documents, including bidders and those who do not bid and their prospective subcontractors and suppliers who may receive all or a part of the Contract documents or copies thereof, shall make every effort to ensure the secure and appropriate disposal of the Contract documents to prevent further disclosure of the information contained in the documents. Secure and appropriate disposal includes methods of document destruction such as shredding or arrangements with refuse handlers that ensure that third persons will not have access to the documents' contents either before, during, or after disposal. Documents may also be returned for disposal purposes to the Contract Desk on the 3rd Floor, 3 Gateway Center, Newark NJ 07102 or the office of the Director of Procurement, One Madison Avenue, 7th Floor, New York NY 10010.
It is a violation of law for any person to alter a document in any way, unless acting under the direction of a licensed professional engineer or registered architect. If this document bearing the seal of an engineer/architect is altered, the altering engineer/architect shall affix to the document their seal and the notation "altered by" followed by their signature and the date of such alteration, and a specific description of the alteration.

Designed by Drawn by Checked by

Date **11/01/2010**

Contract Number

Drawing Number **TD110.04**

PID#

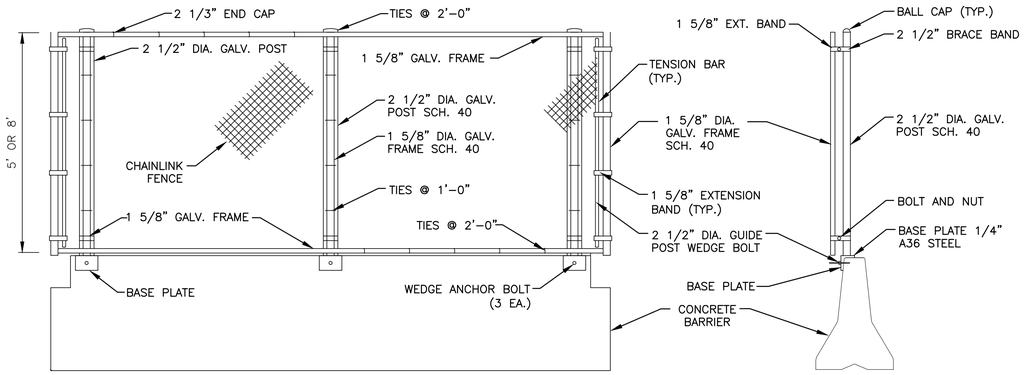

ELEVATION

SIDE VIEW

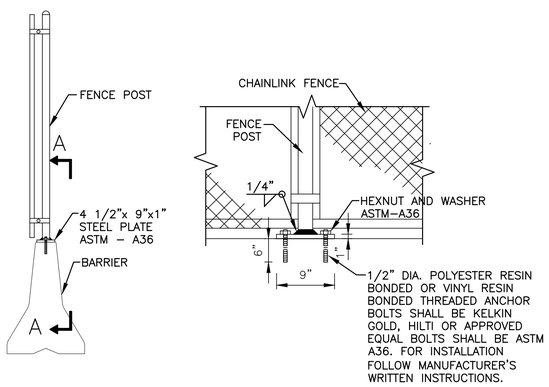

SIDE VIEW

SECCION A–A

ALTERNATE FENCE ATTACHMENT TO BARRIER

NOTES:

1. CONCRETE BARRIER WITH ATTACHED FENCE TO BE PLACED AT THE PERIMETER OF THE AREA OF CONSTRUCTION.
2. SUBMIT SHOP DRAWING OF CHAIN LINK FENCE ON TOP OF TEMPORARY PRECAST CONCRETE BARRIER FOR APPROVAL BY THE ENGINEER. THE SHOP DRAWING SHALL INCLUDE BUT NOT BE LIMITED TO THE METHOD OF SECURING THE FENCE POSTS TO THE CONCRETE BARRIERS.

TEMPORARY SCREEN (ATTACHED TO CHAIN LINK FENCE)

A.) SCREEN FABRIC SHALL BE WOVEN FROM 3.0 OZ./SQ. YD. POLYESTER MATERIAL AND COATED AFTER WEAVING WITH A 6.0 OZ./SQ. YD. COATING OF POLY VINYL CHLORIDE, BLACK IN COLOR. TENSILE STRENGTH WHEN TESTED AS PER THE GRAB METHOD SHALL BE 230 X 220 POUNDS AND WHEN TESTED BY THE STRIP METHOD, SHALL BE 200 X 140 POUNDS.

B.) SCREEN WEATHER COATING SHALL COMPLY TO THE FOLLOWING MINIMUM TEST PERFORMANCE STANDARDS:

PROPERTY	TEST METHOD	SPECIFICATION
WATER ABSORPTION –	ASTM D–471 7 DAYS @ 160 DEG. F.	5.0% MAX. WEIGHT GAIN
PLASTICIZER EXTRACTION BY WATER –	ASTM D–1239 MODIFIED	6.0% MAX. WEIGHT GAIN
WICKING –	7 DAYS @ 160 DEG. F. PROCEDURE 24 HOURS ROOM TEMPERATURE	1/8" MAX.
WEATHERING –	CARBON ARC ASTM D–750 2500 HOURS MIN.	NO APPRECIABLE COLOR CHANGE, NO CRACKING OR CRAZING.

C.) FABRICATION OF SCREEN:

1.) ALL HEMS SHALL BE FOUR–PLY REINFORCED WITH HEAVY DUTY 18 OZ. VINYL COATED NYLON. ALL HEMS AND SEAMS ARE TO BE SEWN WITH #7 WEATHER AND ULTRAVIOLET LIGHT RESISTANT DACRON THREAD.

2.) GROMMETS SHALL BE OF BRASS SPACED AT A MAXIMUM OF 12" APART ON ALL HEMS.

3.) DIE CUT AIR VENTS SHALL BE PLACED A MAXIMUM OF 10'–0" APART.

D.) SCREEN FABRIC SHALL BE SECURELY FASTENED ALONG TOP RAIL AND BOTTOM TENSION WIRE OF CHAIN LINK FENCE AS PER THE MANUFACTURER'S DIRECTIONS.

E.) SCREEN PANELS SHALL BE 'TENN–AIRE, BLACK', AS MANUFACTURED BY DEMILIA ACCESSORIES, INC., WEST CALDWELL, NJ, 07006 OR AN APPROVED EQUAL

.

TEMPORARY CONCRETE BARRIER WITH CHAIN LINK FENCE AND SCREEN

N.T.S. TD110.05.01

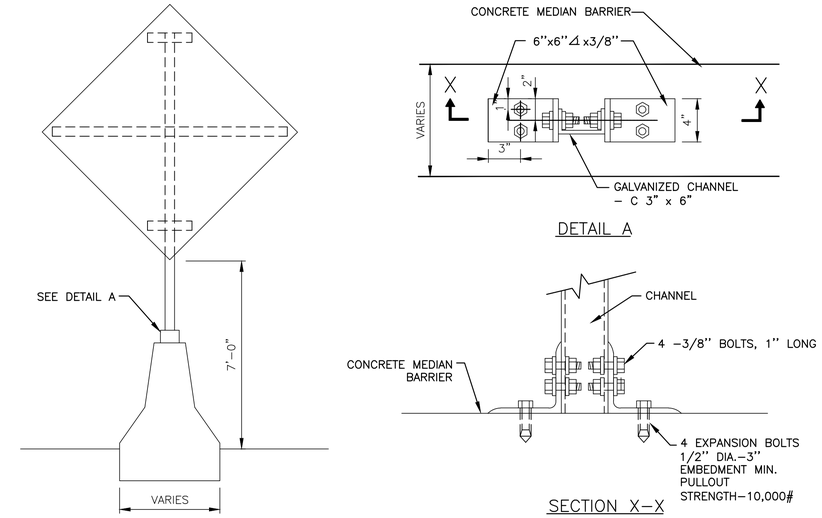

SIGNS MOUNTED ON CONCRETE BARRIER

N.T.S. TD110.05.02

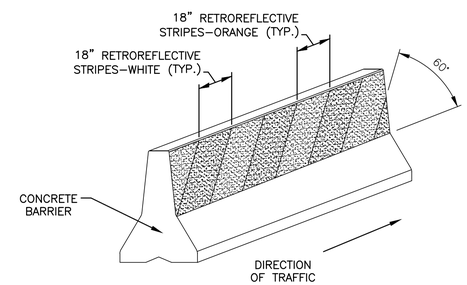

CONCRETE BARRIER WITH ALTERNATED COLOR SPRIPES DETAIL

N.T.S.

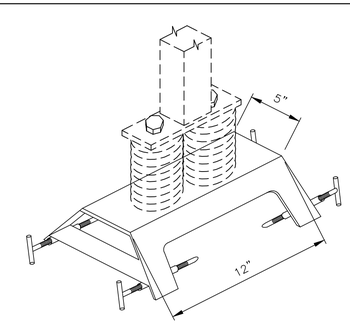

ALTERNATE REMOVABLE MEDIAN BARRIER BRACKET DETAIL

N.T.S. TD110.05.03

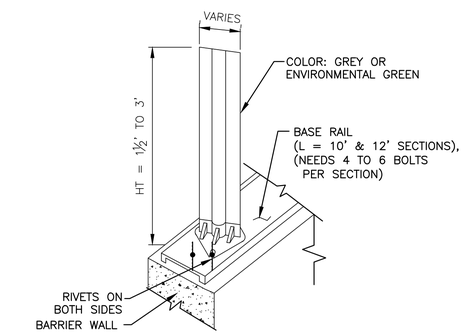

NOTES:

1. BLADES MUST BE OF DESIGN AND SHAPE TO BLOCK THE VIEWING AREA FOR A DRIVER IN A PASSENGER VEHICLE OF INTERMEDIATE SIZE FROM OPPOSING TRAFFIC. TO BLOCK THE VIEWING AREA OF A DRIVER THERE SHOULD BE SUFFICIENT PANELS INSTALLED SUCH THAT A DRIVER IN THE INSIDE LANE CANNOT VIEW LIGHT SOURCES FROM OTHER VEHICLES IN AN OPPOSING INSIDE LANE ACROSS A SEVEN FOOT MEDIAN. THE NUMBER AND SPACING BETWEEN BLADES IS DEPENDENT ON BLADE WIDTH AND CUT–OFF ANGLE. THEY MUST PROVIDE A CUT–OFF ANGLE AS DETERMINED BY USING THE FOLLOWING FORMULA:

   D = Wb (SIN Eb + COS E/TAN Es)

   WHERE Es = 22°
   Eb= angle of blade placement on barrier (0°–52°)
   Wb = width of glare blade
   D = distance between blades.

2. THE BLADE, BASE AND ANCHORING SHALL BE OF SUFFICIENT STRENGTH TO WITHSTAND 5 IMPACTS BEGINNING WITH 15 MPH, AND PROGRESSING THROUGH 25 MPH, 35 MPH, 45 MPH, AND 55 MPH RESPECTIVELY. THE DEVICE USED FOR IMPACTING THE GLARE SCREEN SHALL BE A HORIZONTAL STEEL BAR WITH A 16" BY 24" PLASTIC COVERED STEEL PLATE ATTACHED TO SIMULATE TRUCK BUMPERS, TRAILERS, AND WIDE OR OVERHANGING LOADS. THE LOWEST POINT OF IMPACT BY THE STEEL PLATE WILL BE 10 INCHES ABOVE THE TOP OF THE BARRIER WALL. AFTER 5 IMPACTS ALL BLADES WILL REMAIN ATTACHED TO THE SYSTEM, STAND ERECT, BE SERVICEABLE, AND EXHIBIT NO DELAMINATING OR CRACKING.

3. ALL DIMENSIONS ARE SUBJECT TO MANUFACTURING TOLERANCES. MINOR MANUFACTURE VARIATION MAY BE ACCEPTABLE UPON APROVAL OF THE ENGINEER.

GLARE SCREEN DETAIL

N.T.S. TD110.05.04

Sheet of

THE PORT AUTHORITY OF NY & NJ

CHIEF

No.	Date	Revision	Approved

ENGINEERING DEPARTMENT

PANYNJ Traffic Standard Details

TRAFFIC

Title

TEMPORARY BARRIER

PRECAST CONCRETE CONSTRUCTION BARRIER WITH CHAIN LINK FENCE, SIGN MOUNT AND GLARE SCREEN DETAILS

This drawing subject to conditions in contract. All inventions, ideas, designs and methods herein are reserved to Port Authority and may not be used without its written consent.
All recipients of Contract documents, including bidders and those who do not bid and their prospective subcontractors and suppliers who may receive all or a part of the Contract documents or copies thereof, shall make every effort to ensure the secure and appropriate disposal of the Contract documents to prevent further disclosure of the information contained in the documents. Secure and appropriate disposal includes methods of document destruction such as shredding or arrangements with refuse handlers that ensure that third persons will not have access to the documents' contents either before, during, or after disposal. Documents may also be returned for disposal purposes to the Contract Desk on the 3rd Floor, 3 Gateway Center, Newark NJ 07102 or the office of the Director of Procurement, One Madison Avenue, 7th Floor, New York NY 10010.
It is a violation of law for any person to alter a document in any way, unless acting under the direction of a licensed professional engineer or registered architect. If this document bearing the seal of an engineer/architect is altered, the altering engineer/architect shall affix to the document their seal and the notation "altered by" followed by their signature and the date of such alteration, and a specific description of the alteration.

Designed by Drawn by Checked by

Date **11/01/2010**

Contract Number

Drawing Number **TD110.05**

PID#

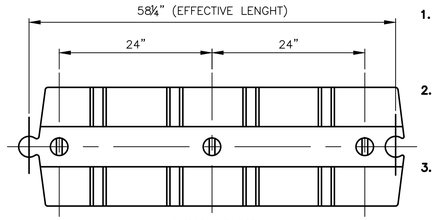

TOP VIEW

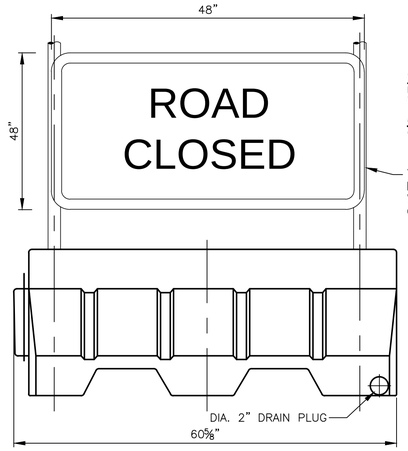

ELEVATION

WEIGHT
EMPTY: 33 LBS
WATER FILLED: 400 LBS

COLORS
ORANGE AND WHITE

TYPICAL 2 POST SIGN R11–2 MOUNTING, WHERE SHOWN ON CONTRACT DRAWING T1

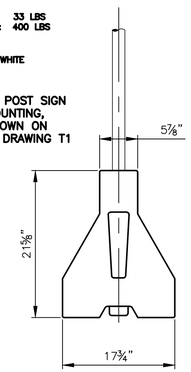

SIDE VIEW

PORTABLE WATER FILLED TRAFFIC BARRIER

N.T.S.

NOTE:

1. WATER FILLED BARRIER MUST MEET LONGITUDINAL BARRIER REQUIREMENTS OF NCHRP REPORT 350 TO BE USED AS BARRIERS AND THE REQUIREMENTS OF SECTION 02846 DIVISION 2 OF SPECIFICATION.
2. ALL DIMENSIONS ARE SUBJECT TO MANUFACTURING TOLERANCES. MINOR MANUFACTURER'S VARIATIONS MAY BE ACCEPTABLE UPON APPROVAL BY THE ENGINEER.
3. DESIGN, SELECTION AND PLACEMENT OF THE WATER FILLED TRAFFIC BARRIER SHOULD CONFIRM WITH APPLICABLE GUIDELINES IN "MUTCD" AND "ROADSIDE DESIGN GUIDE".
4. PORTABLE TRAFFIC BARRIER SHALL BE INSTALLED IN ALTERNATING ORANGE AND WHITE SECTIONSAND FILLED WITH WATER AS INDICATED BELOW. .

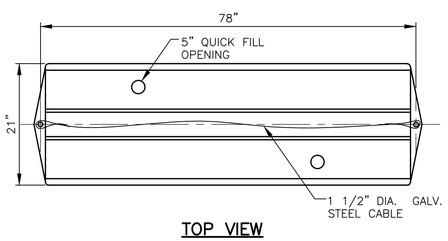

TOP VIEW

NOTES:

1. WATER FILLED TRAFFIC BARRIER MUST MEET LONGITUDINAL BARRIER REQUIREMENTS OF NCHRP REPORT 350 TO BE USED AS BARRIERS AND THE REQUIREMENTS OF SECTION 02846 DIVISION 2 OF SPECIFICATION.
2. ALL DIMENSIONS ARE SUBJECT TO MANUFACTURING TOLERANCES. MINOR MANUFACTURER'S VARIATIONS MAY BE ACCEPTABLE UPON APPROVAL BY THE ENGINEER.
3. DESIGN, SELECTION AND PLACEMENT OF THE WATER FILLED TRAFFIC BARRIER SHOULD CONFIRM WITH APPLICABLE GUIDELINES IN "MUTCD" AND "ROADSIDE DESIGN GUIDE".

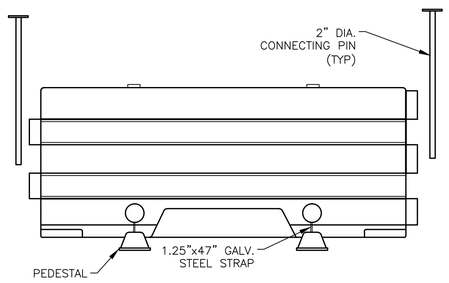

ELEVATION

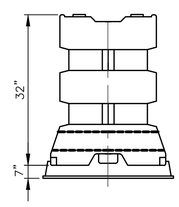

SIDE VIEW

BARRIER WEIGHT:

EMPTY: 140 LBS
WATER FILLED: 1350 LBS
WATER BALLAST: 145 GAL.

PEDESTAL WEIGHT:

EACH: 7 LBS

COLORS:

ORANGE AND WHITE

WATER FILLED TRAFFIC BARRIER

N.T.S. TD110.06.02

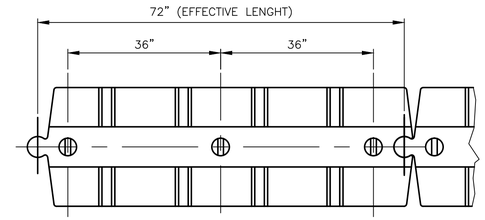

TOP VIEW

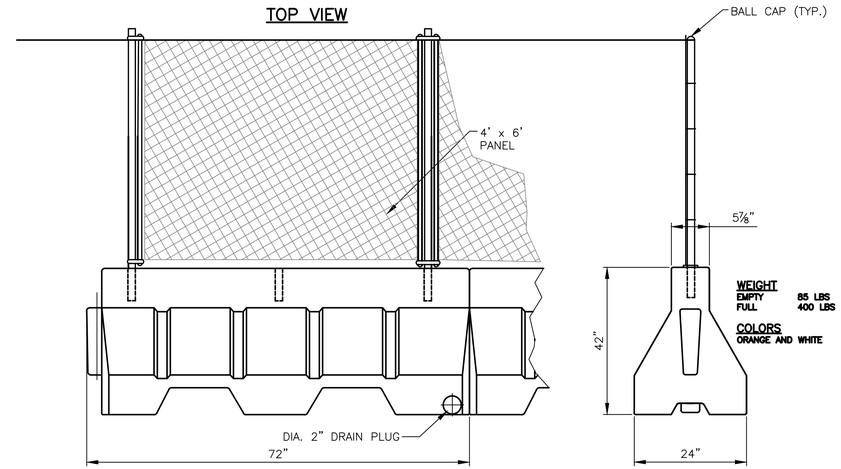

ELEVATION

SIDE VIEW

WEIGHT
EMPTY 85 LBS
FULL 400 LBS

COLORS
ORANGE AND WHITE

NOTE:

1. WATER FILLED BARRIER SHALL MEET LONGITUDINAL BARRIER REQUIREMENTS OF NCHRP REPORT 350 TO BE USED AS BARRIERS AND THE REQUIREMENTS OF SECTION 02846 DIVISION 2 OF SPECIFICATION.
2. ALL DIMENSIONS ARE SUBJECT TO MANUFACTURING TOLERANCES. MINOR MANUFACTURER'S VARIATIONS MAY BE ACCEPTABLE UPON APPROVAL BY THE ENGINEER.
3. DESIGN, SELECTION AND PLACEMENT OF THE WATER FILLED TRAFFIC BARRIER SHALL CONFORM WITH APPLICABLE GUIDELINES IN "MUTCD" AND "ROADSIDE DESIGN GUIDE".
4. PORTABLE TRAFFIC BARRIER SHALL BE INSTALLED IN ALTERNATING ORANGE AND WHITE SECTIONS AND FILLED WITH WATER AS INDICATED BY THE MANUFACTURERS GUIDELINES.
5. WATER FILLED TRAFFIC BARRIER AND FENCE PANELS SHALL BE "ROADGUARD" AS MANUFACTURED BY TRIDENT SECURITY DEVICES, INC., ELKINS PARK, PA, OR APPROVED EQUAL.

SCREEN FABRIC (ATTACHED TO CHAIN LINK FENCE)

A.) SCREEN FABRIC SHALL BE WOVEN FROM 3.0 OZ./SQ. YD. POLYESTER MATERIAL AND COATED AFTER WEAVING WITH A 6.0 OZ./SQ. YD. COATING OF POLY VINYL CHLORIDE, BLACK IN COLOR. TENSILE STRENGTH WHEN TESTED AS PER THE GRAB METHOD SHALL BE 230 X 220 POUNDS AND WHEN TESTED BY THE STRIP METHOD, SHALL BE 200 X 140 POUNDS.

B.) SCREEN WEATHER COATING SHALL COMPLY TO THE FOLLOWING MINIMUM TEST PERFORMANCE STANDARDS:

PROPERTY	TEST METHOD	SPECIFICATION
WATER ABSORPTION –	ASTM D–471 7 DAYS @ 160 DEG. F.	5.0% MAX. WEIGHT GAIN
PLASTICIZER EXTRACTION BY WATER –	ASTM D–1239 MODIFIED	6.0% MAX. WEIGHT GAIN
WICKING –	7 DAYS @ 160 DEG. F. PROCEDURE 24 HOURS ROOM TEMPERATURE	1/8" MAX.
WEATHERING –	CARBON ARC ASTM D–750 2500 HOURS MIN.	NO APPRECIABLE COLOR CHANGE, NO CRACKING OR CRAZING.

C.) FABRICATION OF SCREEN:

1.) ALL HEMS SHALL BE FOUR–PLY REINFORCED WITH HEAVY DUTY 18 OZ. VINYL COATED NYLON. ALL HEMS AND SEAMS ARE TO BE SEWN WITH #7 WEATHER AND ULTRAVIOLET LIGHT RESISTANT DACRON THREAD.

2.) GROMMETS SHALL BE OF BRASS SPACED AT A MAXIMUM OF 12" APART ON ALL HEMS.

3.) DIE CUT AIR VENTS SHALL BE PLACED A MAXIMUM OF 10'–0" APART.

D.) SCREEN FABRIC SHALL BE SECURELY FASTENED ALONG TOP RAIL AND BOTTOM TENSION WIRE OF CHAIN LINK FENCE AS PER THE MANUFACTURER'S DIRECTIONS.

E.) SCREEN PANELS SHALL BE 'TENN–AIRE, BLACK', AS MANUFACTURED BY DEMILIA ACCESSORIES, INC., WEST CALDWELL, NJ, 07006 OR AN APPROVED EQUAL.

WATER FILLED BARRIER WITH FENCE ON TOP

N.T.S.

Sheet of

THE PORT AUTHORITY
OF NY & NJ

CHIEF TRAFFIC ENGINEER

No.	Date	Revision	Approved

ENGINEERING DEPARTMENT

PANYNJ
Traffic Standard Details

TRAFFIC
TEMPORARY BARRIER

WATER FILLED TRAFFIC BARRIER

This drawing subject to conditions in contract. All inventions, ideas, designs and methods herein are reserved to Port Authority and may not be used without its written consent.
All recipients of Contract documents, including bidders and those who do not bid and their prospective subcontractors and suppliers who may receive all or a part of the Contract documents or copies thereof, shall make every effort to ensure the secure and appropriate disposal of the Contract documents to prevent further disclosure of the information contained in the documents. Secure and appropriate disposal includes methods of document destruction such as shredding or arrangements with refuse handlers that ensure that third persons will not have access to the documents' contents either before, during, or after disposal. Documents may also be returned for disposal purposes to the Contract Desk on the 3rd Floor, 3 Gateway Center, Newark NJ 07102 or the office of the Director of Procurement, One Madison Avenue, 7th Floor, New York NY 10010.
It is a violation of law for any person to alter a document in any way, unless acting under the direction of a licensed professional engineer or registered architect. If this document bearing the seal of an engineer/architect is altered, the altering engineer/architect shall affix to the document their seal and the notation "altered by" followed by their signature and the date of such alteration, and a specific description of the alteration.

Designed by	Drawn by	Checked by

Date 11/01/2010

Contract Number

Drawing Number **TD110.06**

PID#

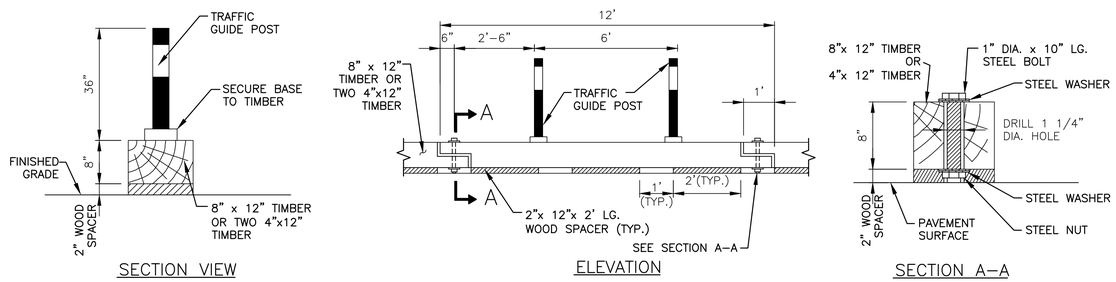

NOTES:

1. DO NOT ANCHOR, ATTACH OR ROD INTO PAVEMENT OR DECK. FASTEN TIMBER BARRICADE SECTIONS AS SHOWN.
2. TIMBER BARRICADE SHOULD BE USED TO DELINEATE PEDESTRIAN TRAFFIC ONLY.

TIMBER BARRICADE WITH TRAFFIC GUIDE POST

N.T.S. TD110.08.01

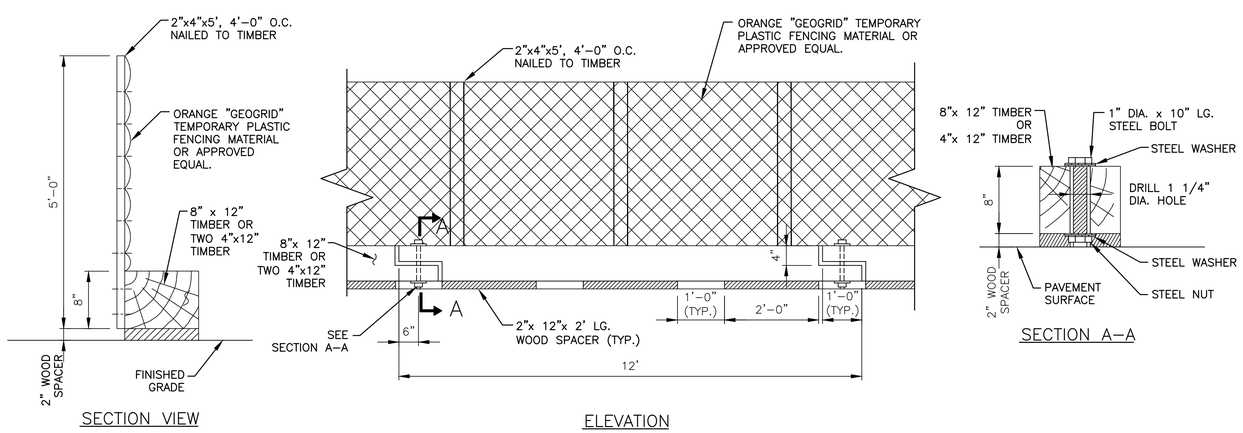

NOTES:

1. DO NOT ANCHOR, ATTACH OR ROD INTO PAVEMENT OR DECK. FASTEN TIMBER BARRICADE SECTIONS AS SHOWN.
2. TIMBER BARRICADE SHOULD BE USED TO DELINEATE PEDESTRIAN TRAFFIC ONLY.
3. THE MAXIMUM SIZE OF SIGNS SHALL BE 48"x30" WITH MOUNTING ON CENTER OF MIDDLE RAIL.

TIMBER BARRICADE WITH GEOGRID FENCE

N.T.S. TD110.08.02

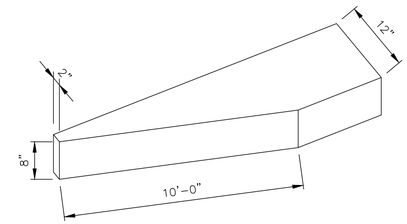

TAPERED APPROACH END SECTION

TO THE LEFT OF TRAFFIC (SHOWN) TD110.08.03
(TO THE RIGHT OF TRAFFIC – OPPOSITE HAND)
N.T.S.

Sheet of

THE PORT AUTHORITY OF NY & NJ

CHIEF

No.	Date	Revision	Approved

ENGINEERING DEPARTMENT

PANYNJ Traffic Standard Details

TRAFFIC

Title
TEMPORARY BARRIER

TIMBER BARRICADES TYPE 1 AND 2

This drawing subject to conditions in contract. All inventions, ideas, designs and methods herein are reserved to Port Authority and may not be used without its written consent.
All recipients of Contract documents, including bidders and those who do not bid and their prospective subcontractors and suppliers who may receive all or a part of the Contract documents or copies thereof, shall make every effort to ensure the secure and appropriate disposal of the Contract documents to prevent further disclosure of the information contained in the documents. Secure and appropriate disposal includes methods of document destruction such as shredding or arrangements with refuse handlers that ensure that third persons will not have access to the documents' contents either before, during, or after disposal. Documents may also be returned for disposal purposes to the Contract Desk on the 3rd Floor, 3 Gateway Center, Newark NJ 07102 or the office of the Director of Procurement, One Madison Avenue, 7th Floor, New York NY 10010.
It is a violation of law for any person to alter a document in any way, unless acting under the direction of a licensed professional engineer or registered architect. If this document bearing the seal of an engineer/architect is altered, the altering engineer/architect shall affix to the document their seal and the notation "altered by" followed by their signature and the date of such alteration, and a specific description of the alteration.

Designed by Drawn by Checked by

Date **11/01/2010**

Contract Number

Drawing Number **TD110.07**

PID#