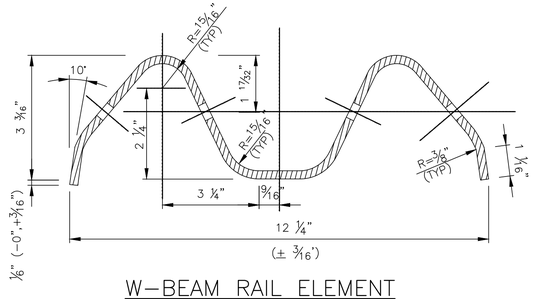

W–BEAM RAIL ELEMENT

N.T.S.

RAIL ELEMENTS SHALL BE SUPPLIED IN LENGTHS OF 13'–6½" OR 26'–½"

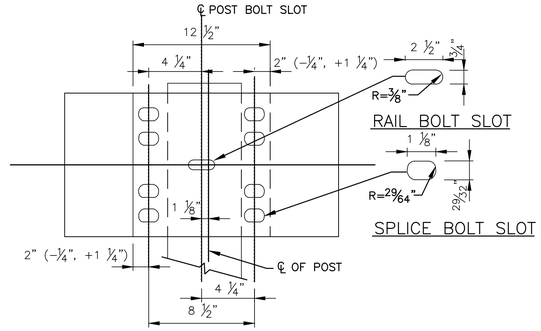

DETAIL OF RAIL SPLICE JOINT

N.T.S.

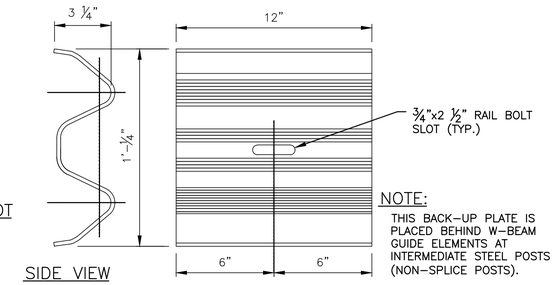

NOTE:

THIS BACK–UP PLATE IS PLACED BEHIND W–BEAM GUIDE ELEMENTS AT INTERMEDIATE STEEL POSTS (NON–SPLICE POSTS).

W–BEAM BACK–UP PLATE

N.T.S.

NOTES:

1. ALL BOLTS, NUTS, WASHERS, AND OTHER STEEL ITEMS ARE TO BE GALVANIZED.
2. FOR TIMBER POSTS, DRIVE NAIL WITHIN 2" OF THE TOP OR BOTTOM OF BLOCKOUT AFTER 5/8"x18" BOLT IS INSTALLED.
3. STANDARD WASHER TO BE USED ON THE LAST 50 FEET OF RUN OF END ONLY.
4. ALL DIMENSIONS ARE SUBJECT TO MANUFACTURING TOLERANCES.
5. RAIL ELEMENTS SHALL BE FURNISHED SHOPCURVED, CONCAVE OR CONVEX, FOR RADII LESS THAN 150 FEET.
6. THE STEEL FOR RAIL ELEMENTS AND BOLTS SHALL CONFORM TO SPECIFICATION SECTION 02841 W–BEAM AND THRIE–BEAM GUIDE RAIL.
7. BLOCKOUT MATERIAL, PLASTIC, SYNTHETIC OR TIMBER SHALL BE APPROVED BY THE ENGINEER PRIOR TO INSTALLATION.
8. FOR RUB RAIL DETAILS, SEE DRAWING TD300.05.

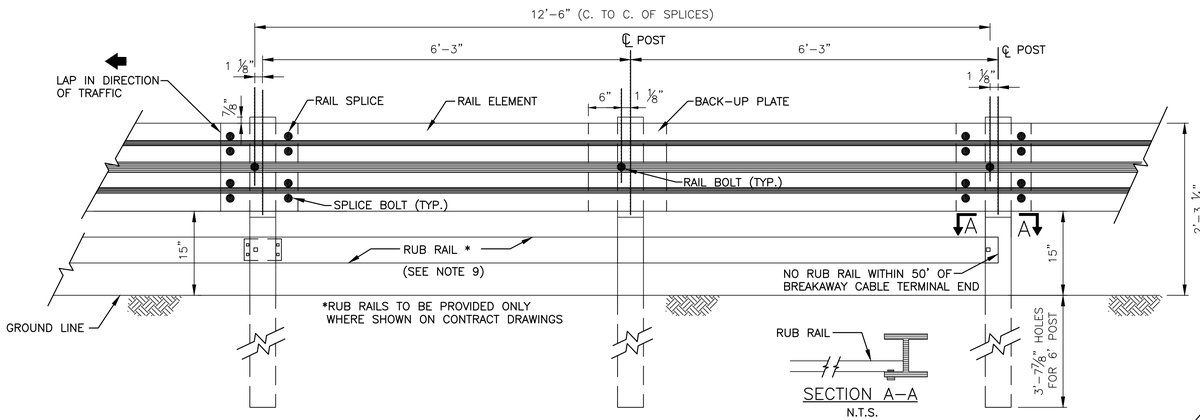

SECTION A–A

N.T.S.

W–BEAM GUIDE RAIL

N.T.S.

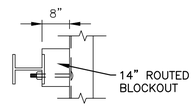

PLAN

N.T.S.

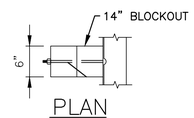

PLAN

N.T.S.

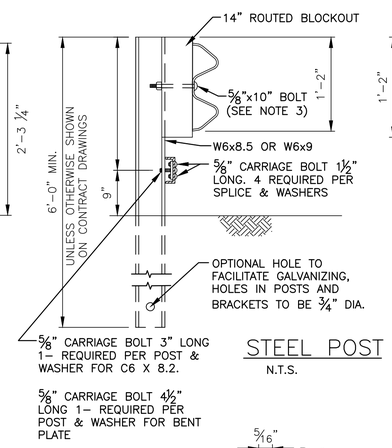

STEEL POST

N.T.S.

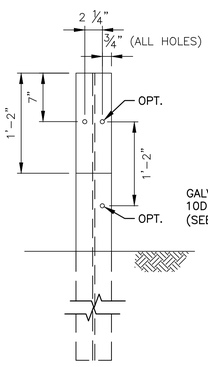

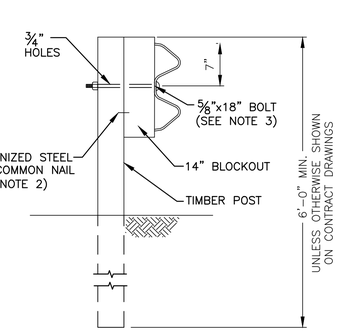

6x8 TIMBER POST

N.T.S.

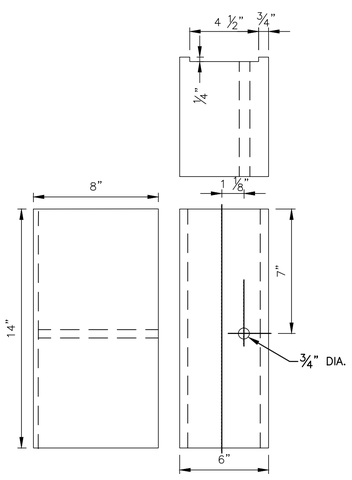

14" ROUTED BLOCKOUT

N.T.S.

6"x8" TREATED TIMBER OR RECYCLED SYNTHETIC MATERIAL

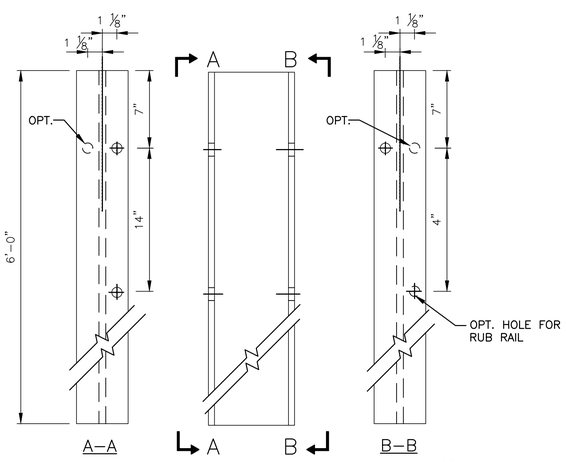

A–A

6' POST

N.T.S.

W6x8.5 OR W6x9

B–B

ALL HOLES 13/16" DIA.

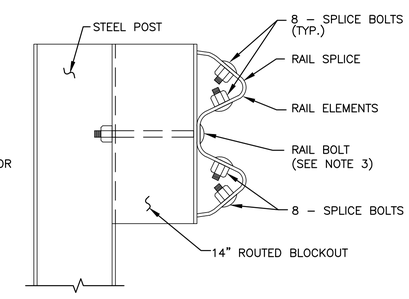

W–BEAM GUIDE RAIL ASSEMBLY

N.T.S.

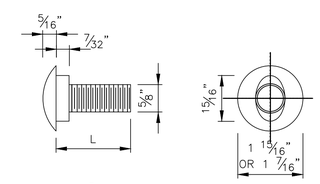

5/8" DIA. BUTTON HEAD BOLT

TYPE	L	THREAD LENGTH
SPLICE BOLT	1 ¼"	FULL LENGTH
STEEL POST BOLT	9 ½"	1 ¾"
WOOD POST BOLT	18"	2 ½"

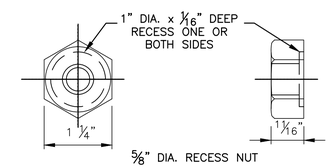

5/8" DIA. RECESS NUT

SPLICE & RAIL NUT & BOLT

N.T.S.

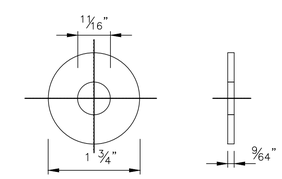

STEEL WASHER

POST WASHER

N.T.S.

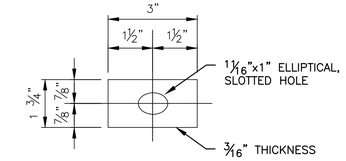

DETAIL OF STANDARD WASHER

N.T.S.

(RECTANGULAR PLATE WASHER)

Sheet of

THE PORT AUTHORITY OF NY & NJ

CHIEF

No.	Date	Revision	Approved

ENGINEERING DEPARTMENT

PANYNJ
Traffic Standard Details

TRAFFIC

Title

GUIDE RAIL DETAILS

W-BEAM GUIDE RAIL

This drawing subject to conditions in contract. All inventions, ideas, designs and methods herein are reserved to Port Authority and may not be used without its written consent.
All recipients of Contract documents, including bidders and those who do not bid and their prospective subcontractors and suppliers who may receive all or a part of the Contract documents or copies thereof, shall make every effort to ensure the secure and appropriate disposal of the Contract documents to prevent further disclosure of the information contained in the documents. Secure and appropriate disposal includes methods of document destruction such as shredding or arrangements with refuse handlers that ensure that third persons will not have access to the documents' contents either before, during, or after disposal. Documents may also be returned for disposal purposes to the Contract Desk on the 3rd Floor, 3 Gateway Center, Newark NJ 07102 or the office of the Director of Procurement, One Madison Avenue, 7th Floor, New York NY 10010.
It is a violation of law for any person to alter a document in any way, unless acting under the direction of a licensed professional engineer or registered architect. If this document bearing the seal of an engineer/architect is altered, the altering engineer/architect shall affix to the document their seal and the notation "altered by" followed by their signature and the date of such alteration, and a specific description of the alteration.

Designed by	Drawn by	Checked by

Date **03/14/2014**

Contract Number

Drawing Number **TD300.01**

PID#

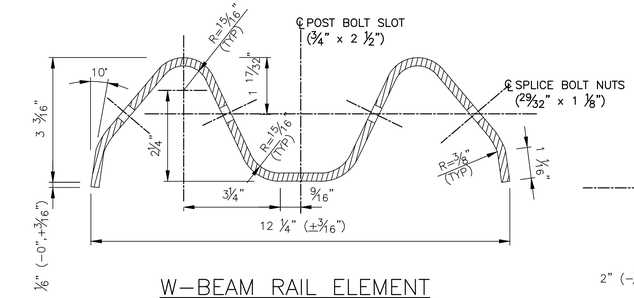

W–BEAM RAIL ELEMENT

N.T.S.

RAIL ELEMENTS SHALL BE SUPPLIED IN LENGTHS OF 13'–6½" OR 26'–½"

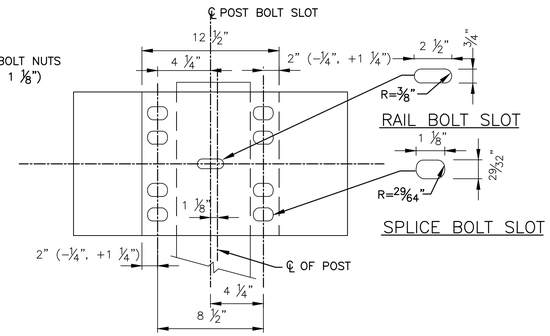

DETAIL OF RAIL SPLICE JOINT

N.T.S.

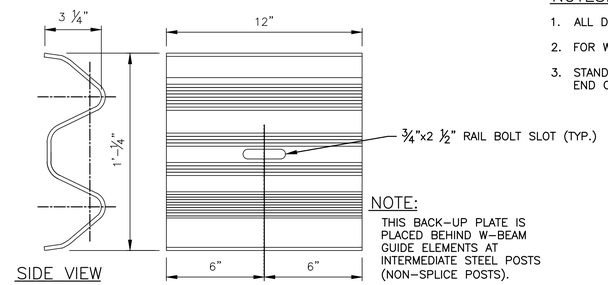

NOTE:

THIS BACK–UP PLATE IS PLACED BEHIND W–BEAM GUIDE ELEMENTS AT INTERMEDIATE STEEL POSTS (NON–SPLICE POSTS).

W–BEAM BACK–UP PLATE

N.T.S.

NOTES:

1. ALL DIMENSIONS ARE SUBJECT TO MANUFACTURING TOLERANCES.
2. FOR W–BEAM GUIDE RAIL NOTES REFER TO DRAWING TD300.02.
3. STANDARD WASHER TO BE USED ON THE LAST 50 FEET OF RUN OF END ONLY.

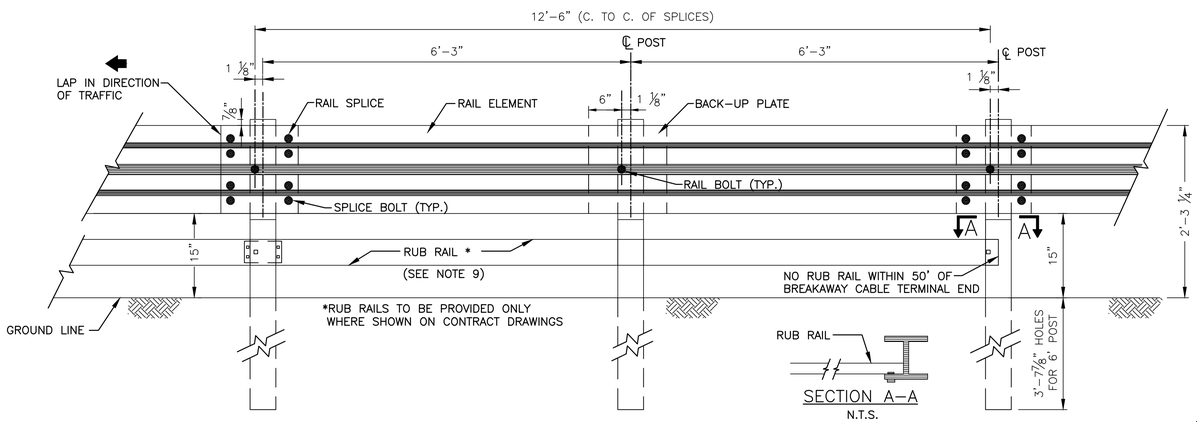

DUAL FACED W–BEAM GUIDE RAIL

N.T.S.

SECTION A–A

N.T.S.

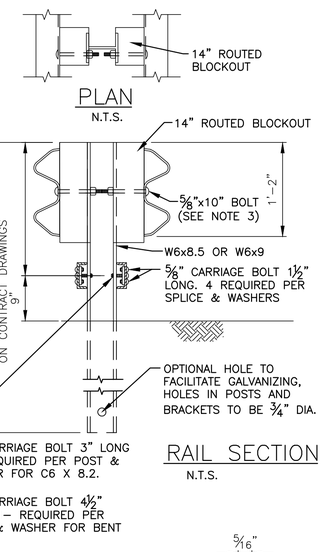

RAIL SECTION

N.T.S.

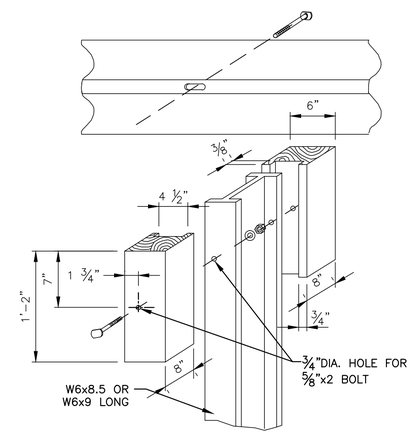

DUAL FACED BARRIER POST ASSEMBLY DETAILS

(GUIDE RAIL SIMILAR)

N.T.S.

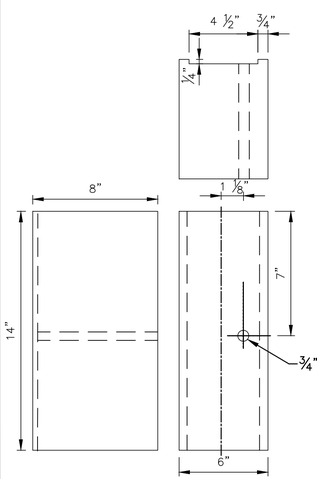

14" ROUTED BLOCKOUT

N.T.S.

6"x8" TREATED TIMBER OR RECYCLED SYNTHETIC MATERIAL

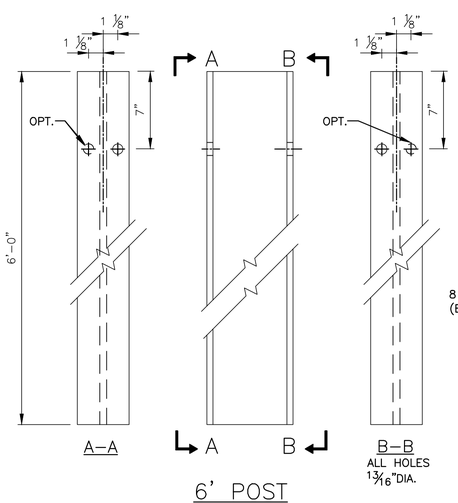

6' POST

N.T.S.

W6x8.5 OR W6x9

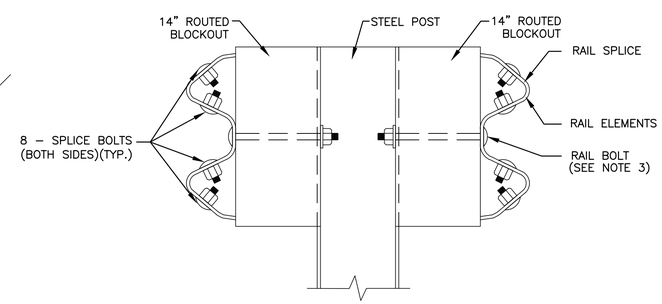

DUAL FACE POST ASSEMBLY

N.T.S.

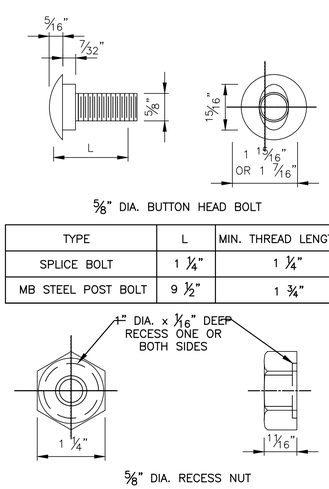

TYPE	L	MIN. THREAD LENGTH
SPLICE BOLT	1 ¼"	1 ¼"
MB STEEL POST BOLT	9 ½"	1 ¾"

SPLICE & RAIL NUT & BOLT

N.T.S.

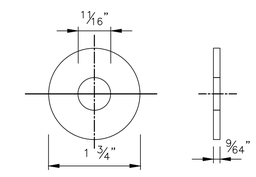

POST WASHER

N.T.S.

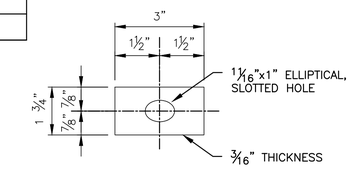

DETAIL OF STANDARD WASHER

N.T.S.

(RECTANGULAR PLATE WASHER)

Sheet of

THE PORT AUTHORITY OF NY & NJ

CHIEF

No.	Date	Revision	Approved

ENGINEERING DEPARTMENT

PANYNJ
Traffic Standard Details

TRAFFIC

Title

GUIDE RAIL DETAILS

DUAL FACED W-BEAM GUIDE RAIL

This drawing subject to conditions in contract. All inventions, ideas, designs and methods herein are reserved to Port Authority and may not be used without its written consent.
All recipients of Contract documents, including bidders and those who do not bid and their prospective subcontractors and suppliers who may receive all or a part of the Contract documents or copies thereof, shall make every effort to ensure the secure and appropriate disposal of the Contract documents to prevent further disclosure of the information contained in the documents. Secure and appropriate disposal includes methods of document destruction such as shredding or arrangements with refuse handlers that ensure that third persons will not have access to the documents' contents either before, during, or after disposal. Documents may also be returned for disposal purposes to the Contract Desk on the 3rd Floor, 3 Gateway Center, Newark NJ 07102 or the office of the Director of Procurement, One Madison Avenue, 7th Floor, New York NY 10010.
It is a violation of law for any person to alter a document in any way, unless acting under the direction of a licensed professional engineer or registered architect. If this document bearing the seal of an engineer/architect is altered, the altering engineer/architect shall affix to the document their seal and the notation "altered by" followed by their signature and the date of such alteration, and a specific description of the alteration.

Designed by	Drawn by	Checked by

Date **03/14/2014**

Contract Number

Drawing Number **TD300.02**

PID#

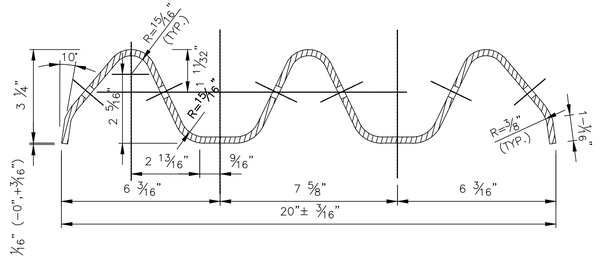

THRIE–BEAM RAIL ELEMENT

N.T.S.

RAIL ELEMENTS SHALL BE SUPPLIED IN LENGTHS OF 13'–6½" OR 26'–½"

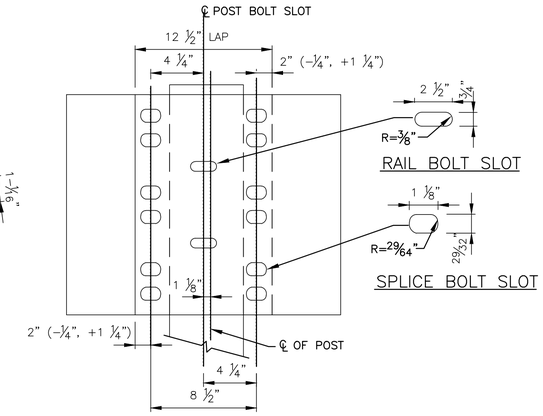

DETAIL OF RAIL SPLICE JOINT

N.T.S.

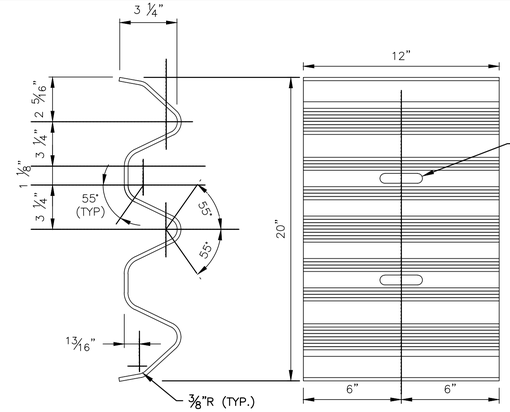

SIDE VIEW

THRIE–BEAM BACK–UP PLATE

N.T.S.

NOTES:

1. ALL DIMENSIONS ARE SUBJECT TO MANUFACTURING TOLERANCES.
2. RAIL ELEMENTS SHALL BE FURNISHED SHOPCURVED, CONCAVE OR CONVEX, FOR RADII LESS THAN 150 FEET.
3. THE STEEL FOR RAIL ELEMENTS AND BOLTS SHALL CONFORM TO SPECIFICATION SECTION 02841.

NOTE:

THIS BACK–UP PLATE IS PLACED BEHIND THRIE–BEAM GUIDE RAIL ELEMENTS AT INTERMEDIATE STEEL POSTS (NON–SPLICE POSTS).

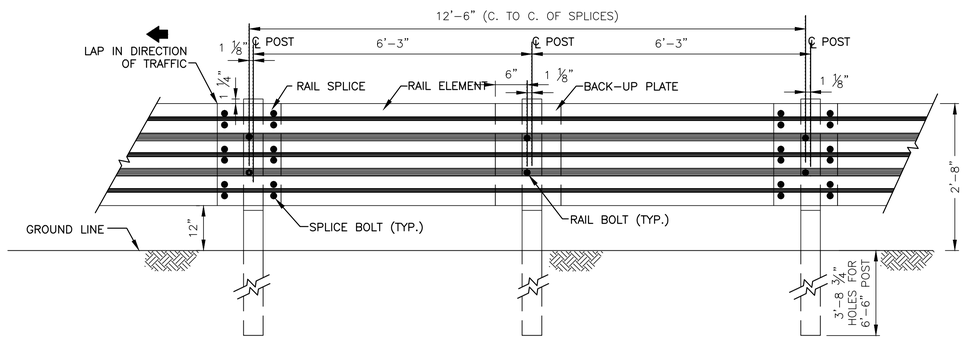

THRIE–BEAM GUIDE RAIL

N.T.S.

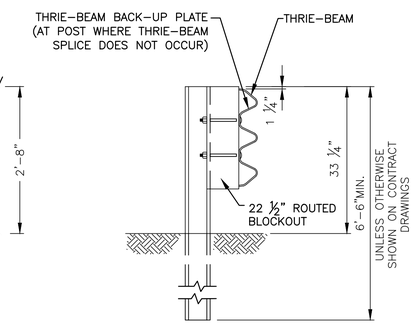

RAIL SECTION

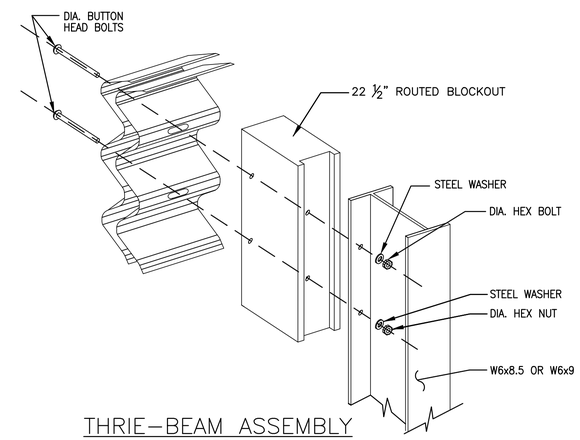

THRIE–BEAM ASSEMBLY

N.T.S.

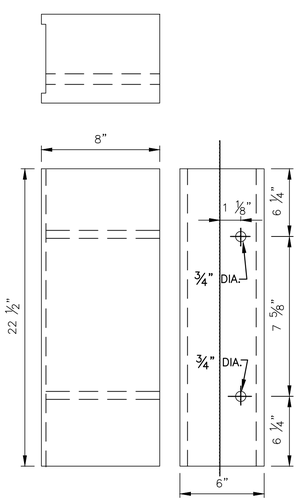

22 1/2" ROUTED BLOCKOUT

N.T.S.

6"x8" TREATED TIMBER OR RECYCLED SYNTHETIC MATERIAL

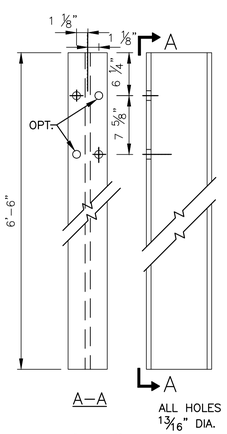

6'–6" POST

N.T.S.

W6x8.5 OR W6x9

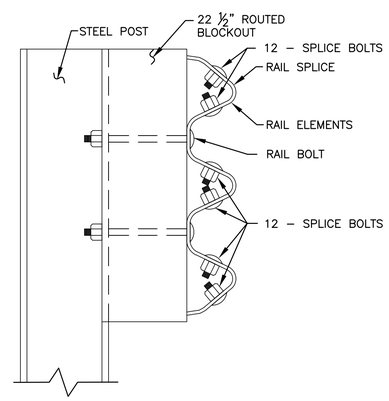

THRIE–BEAM GUIDE RAIL POST ASSEMBLY

N.T.S.

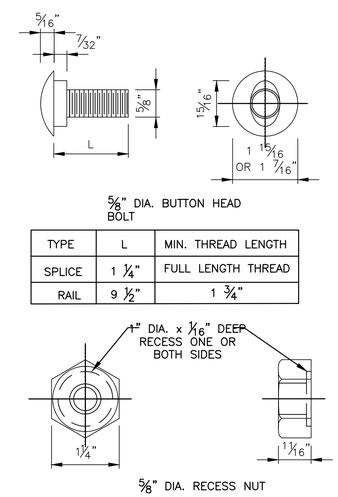

5/8" DIA. BUTTON HEAD BOLT

TYPE	L	MIN. THREAD LENGTH
SPLICE	1 ¼"	FULL LENGTH THREAD
RAIL	9 ½"	1 ¾"

5/8" DIA. RECESS NUT

SPLICE & RAIL NUT & BOLT

N.T.S.

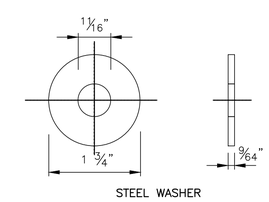

STEEL WASHER

POST WASHER

N.T.S.

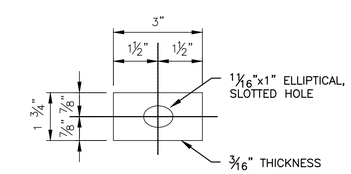

DETAIL OF STANDARD WASHER

N.T.S.

(RECTANGULAR PLATE WASHER)

Sheet of

THE PORT AUTHORITY OF NY & NJ

CHIEF

No.	Date	Revision	Approved

ENGINEERING DEPARTMENT

PANYNJ Traffic Standard Details

TRAFFIC

Title

GUIDE RAIL DETAILS

THRIE-BEAM GUIDE RAIL

This drawing subject to conditions in contract. All inventions, ideas, designs and methods herein are reserved to Port Authority and may not be used without its written consent.
All recipients of Contract documents, including bidders and those who do not bid and their prospective subcontractors and suppliers who may receive all or a part of the Contract documents or copies thereof, shall make every effort to ensure the secure and appropriate disposal of the Contract documents to prevent further disclosure of the information contained in the documents. Secure and appropriate disposal includes methods of document destruction such as shredding or arrangements with refuse handlers that ensure that third persons will not have access to the documents' contents either before, during, or after disposal. Documents may also be returned for disposal purposes to the Contract Desk on the 3rd Floor, 3 Gateway Center, Newark NJ 07102 or the office of the Director of Procurement, One Madison Avenue, 7th Floor, New York NY 10010.
It is a violation of law for any person to alter a document in any way, unless acting under the direction of a licensed professional engineer or registered architect. If this document bearing the seal of an engineer/architect is altered, the altering engineer/architect shall affix to the document their seal and the notation "altered by" followed by their signature and the date of such alteration, and a specific description of the alteration.

Designed by	Drawn by	Checked by

Date **03/14/2014**

Contract Number

Drawing Number **TD300.03**

PID#

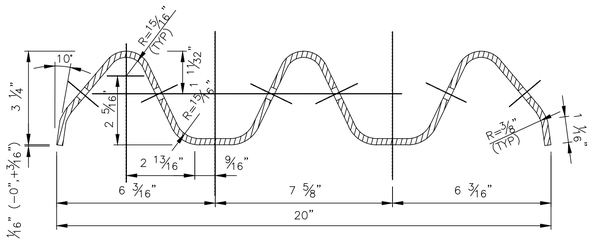

THRIE-BEAM RAIL ELEMENT

N.T.S.

RAIL ELEMENTS SHALL BE SUPPLIED IN LENGTHS OF 13'-6½" OR 26'-½"

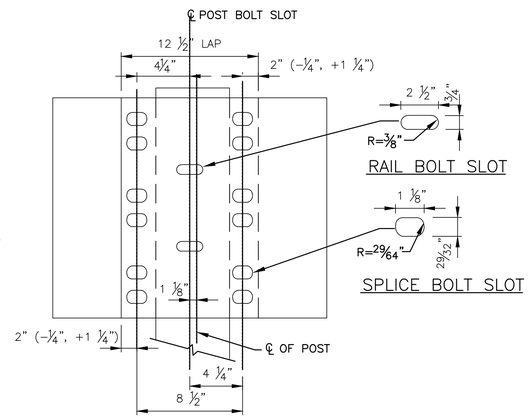

DETAIL OF RAIL SPLICE JOINT

N.T.S.

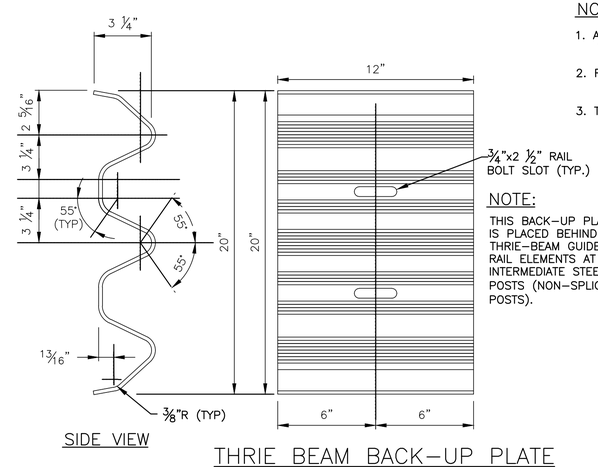

SIDE VIEW

THRIE BEAM BACK-UP PLATE

N.T.S.

NOTES:

1. ALL DIMENSIONS ARE SUBJECT TO MANUFACTURING TOLERANCES.
2. RAIL ELEMENTS SHALL BE FURNISHED SHOPCURVED, CONCAVE OR CONVEX, FOR RADII LESS THAN 150 FEET.
3. THE STEEL FOR RAIL ELEMENTS AND BOLTS SHALL CONFORM TO SPECIFICATION SECTION 02841.

NOTE:

THIS BACK-UP PLATE IS PLACED BEHIND THRIE-BEAM GUIDE RAIL ELEMENTS AT INTERMEDIATE STEEL POSTS (NON-SPLICE POSTS).

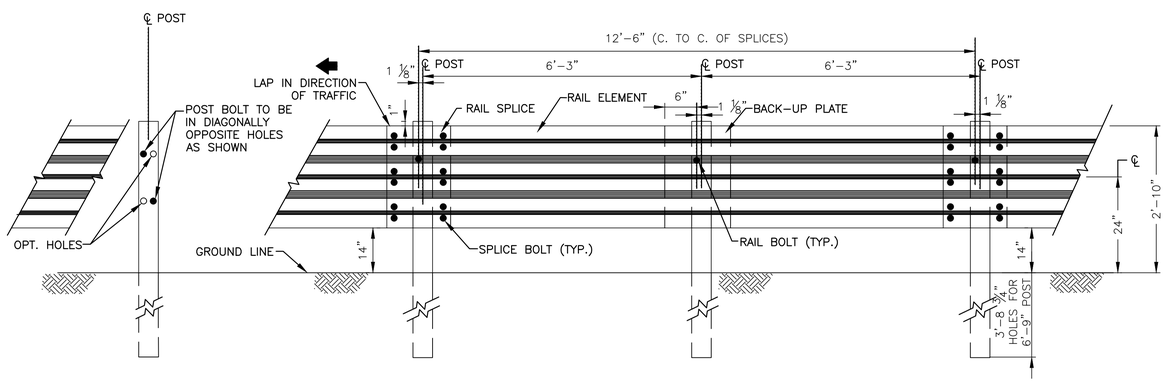

MODIFIED THRIE-BEAM GUIDE RAIL

N.T.S.

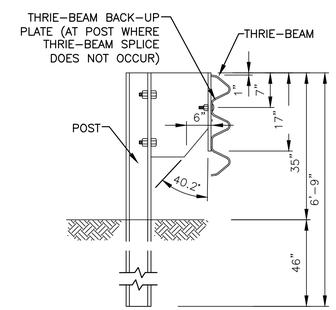

RAIL SECTION

N.T.S.

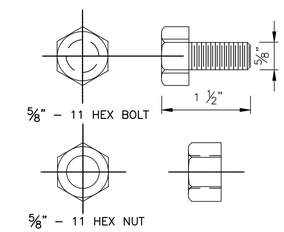

POST NUT & BOLT

N.T.S.

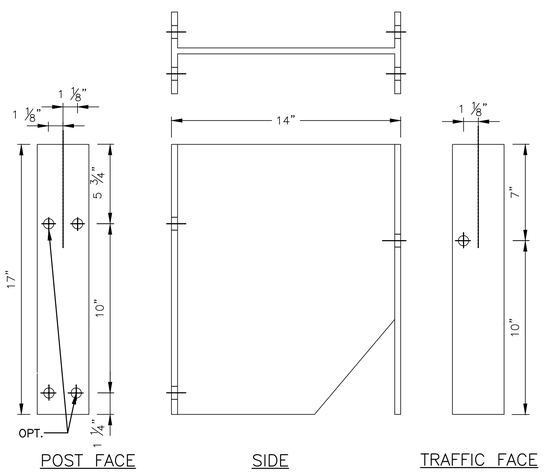

POST FACE SIDE TRAFFIC FACE

ALL HOLES 13/16"DIA.

17" BLOCKOUT

N.T.S.

M14 x 18 STEEL

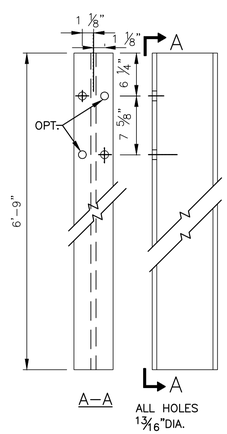

6'-9" POST

N.T.S.

W6x8.5 OR W6x9

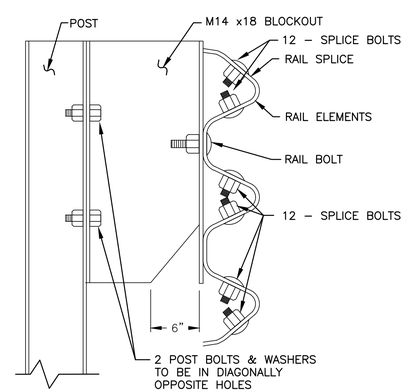

MODIFIED THRIE-BEAM GUIDE RAIL POST ASSEMBLY

N.T.S.

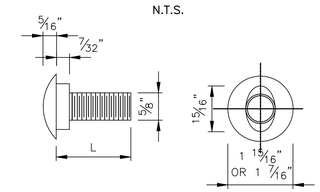

5/8" DIA. BUTTON HEAD BOLT

TYPE	L	MIN. THREAD LENGTH
SPLICE	1¼"	1¼"
RAIL	2"	1½"

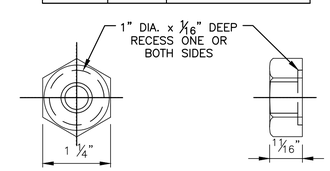

5/8" DIA. RECESS NUT

SPLICE & RAIL NUT & BOLT

N.T.S.

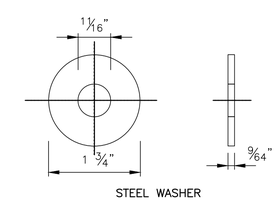

STEEL WASHER

POST WASHER

N.T.S.

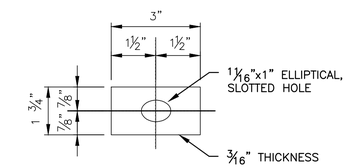

DETAIL OF STANDARD WASHER

N.T.S.

(RECTANGULAR PLATE WASHER)

Sheet of

THE PORT AUTHORITY OF NY & NJ

CHIEF

No.	Date	Revision	Approved

ENGINEERING DEPARTMENT

PANYNJ Traffic Standard Details

TRAFFIC

Title

GUIDE RAIL DETAILS

MODIFIED THRIE-BEAM GUIDE RAIL

This drawing subject to conditions in contract. All inventions, ideas, designs and methods herein are reserved to Port Authority and may not be used without its written consent.
All recipients of Contract documents, including bidders and those who do not bid and their prospective subcontractors and suppliers who may receive all or a part of the Contract documents or copies thereof, shall make every effort to ensure the secure and appropriate disposal of the Contract documents to prevent further disclosure of the information contained in the documents. Secure and appropriate disposal includes methods of document destruction such as shredding or arrangements with refuse handlers that ensure that third persons will not have access to the documents' contents either before, during, or after disposal. Documents may also be returned for disposal purposes to the Contract Desk on the 3rd Floor, 3 Gateway Center, Newark NJ 07102 or the office of the Director of Procurement, One Madison Avenue, 7th Floor, New York NY 10010.
It is a violation of law for any person to alter a document in any way, unless acting under the direction of a licensed professional engineer or registered architect. If this document bearing the seal of an engineer/architect is altered, the altering engineer/architect shall affix to the document their seal and the notation "altered by" followed by their signature and the date of such alteration, and a specific description of the alteration.

Designed by Drawn by Checked by

Date **03/14/2014**

Contract Number

Drawing Number **TD300.04**

PID#

NOTE:

ALL SLOTS 1 1/16"x2"
ALL SQUARE HOLES 1 1/16"

RUB RAIL MAY BE SUPPLIED IN LENGTHS OF 12'-5 3/4" OR 24'-11 3/4"

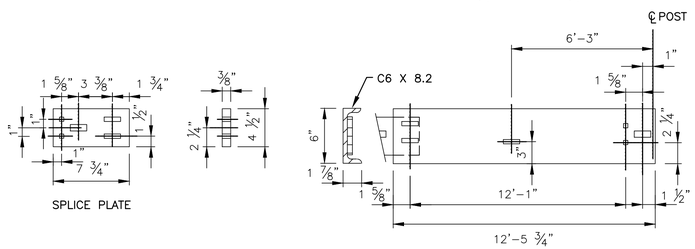

C6 X 8.2

N.T.S.

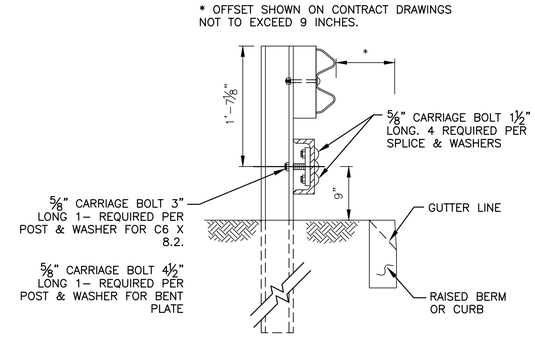

RUB RAIL SECTION

N.T.S.

GENERAL NOTES – GUIDE RAIL ATTACHMENTS

1. STRUCTURAL STEEL PLATES AND SHAPES SHALL CONFORM TO ASTM A36 AND SHALL BE GALVANIZED PER ASTM A123.
2. STEEL BOLTS, NUTS AND WASHERS SHALL CONFORM TO ASTM A307, UNLESS DESIGNATED AS HIGH STRENGTH. HIGH STRENGTH BOLTS, NUTS AND WASHERS SHALL CONFORM TO ASTM A325. HARDWARE SHALL BE GALVANIZED PER ASTM A153.
3. CONCRETE SHALL BE CLASS B CONCRETE.
4. REINFORCEMENT SHALL CONFORM TO ASTM A615, GRADE 60.
5. HIGH STRENGTH BOLTS FOR BASE PLATE ANCHORAGE SHALL BE FULLY THREADED AND INSTALLED IN CORED HOLES NO GREATER THAN THE BOLT DIAMETER PLUS 1/4". CARE SHALL BE EXERCISED TO AVOID DAMAGE TO EXISTING REINFORCEMENT AND CONDUITS. MINIMUM EMBEDMENT LENGTH SHALL BE 6". BOLTS SHALL BE EPOXY GROUTED IN PLACE PER MANUFACTURER'S RECOMMENDATIONS TO ATTAIN A MINIMUM PULLOUT STRENGTH OF 24,000 POUNDS AT THE CONSTRUCTION SITE AS CERTIFIED BY THE CONTRACTOR.
6. HIGH STRENGTH BOLTS FOR BASE PLATE ANCHORAGE MAY BE CAST IN PLACE IN FRESH CONCRETE WITH A MINIMUM EMBEDMENT LENGTH OF 20".
7. WELDING OF POSTS TO BASE PLATES SHALL CONFORM TO THE ANSI/AASHTO/AWSD1.5 BRIDGE WELDING CODE.

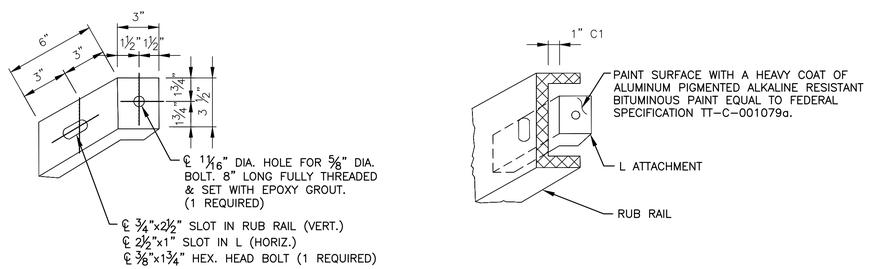

RUB RAIL ANGLE ATTACHMENT

N.T.S.

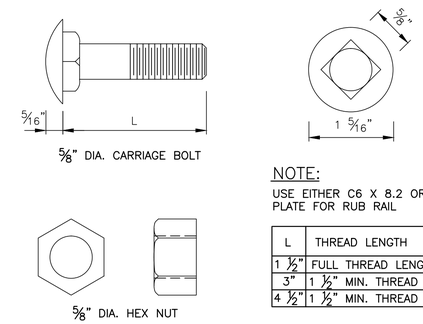

NOTE:

USE EITHER C6 X 8.2 OR BENT PLATE FOR RUB RAIL

L	THREAD LENGTH
1 1/2"	FULL THREAD LENGTH
3"	1 1/2" MIN. THREAD LENGTH
4 1/2"	1 1/2" MIN. THREAD LENGTH

BOLT DETAIL

N.T.S.

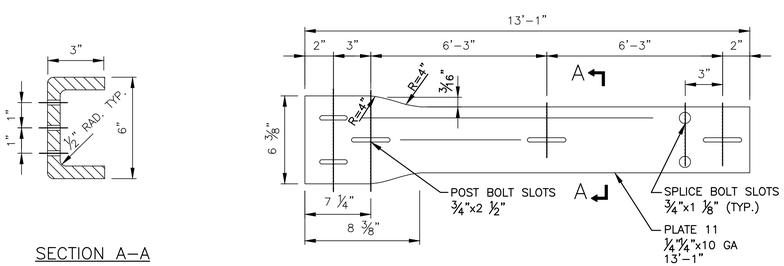

BENT PLATE

N.T.S.

RUB RAIL DETAILS

N.T.S.

Sheet of

THE PORT AUTHORITY OF NY & NJ

CHIEF

No.	Date	Revision	Approved

ENGINEERING DEPARTMENT

PANYNJ Traffic Standard Details

TRAFFIC

Title

GUIDE RAIL DETAILS

GUIDE RAIL ATTACHMENTS GENERAL NOTES AND RUB RAIL DETAIL

This drawing subject to conditions in contract. All inventions, ideas, designs and methods herein are reserved to Port Authority and may not be used without its written consent.
All recipients of Contract documents, including bidders and those who do not bid and their prospective subcontractors and suppliers who may receive all or a part of the Contract documents or copies thereof, shall make every effort to ensure the secure and appropriate disposal of the Contract documents to prevent further disclosure of the information contained in the documents. Secure and appropriate disposal includes methods of document destruction such as shredding or arrangements with refuse handlers that ensure that third persons will not have access to the documents' contents either before, during, or after disposal. Documents may also be returned for disposal purposes to the Contract Desk on the 3rd Floor, 3 Gateway Center, Newark NJ 07102 or the office of the Director of Procurement, One Madison Avenue, 7th Floor, New York NY 10010.
It is a violation of law for any person to alter a document in any way, unless acting under the direction of a licensed professional engineer or registered architect. If this document bearing the seal of an engineer/architect is altered, the altering engineer/architect shall affix to the document their seal and the notation "altered by" followed by their signature and the date of such alteration, and a specific description of the alteration.

Designed by Drawn by Checked by

Date 03/14/2014

Contract Number

Drawing Number TD300.05

PID#

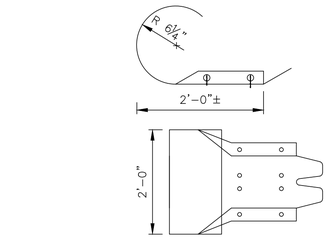

W–BEAM END SECTION (ROUNDED)

N.T.S.

TYPE	L	MIN. THREAD LENGTH
SPLICE	1 ¼"	1 ¼"
RAIL	2"	1 ½"

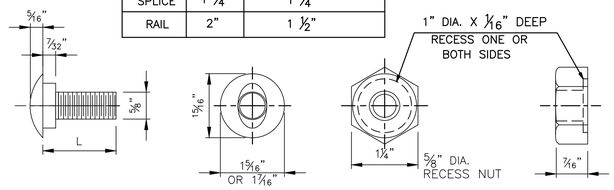

SPLICE/RAIL NUT & BOLT

N.T.S.

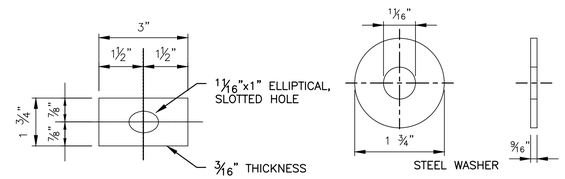

DETAIL OF STANDARD WASHER

N.T.S.

(RECTANGULAR PLATE WASHER)

POST WASHER

N.T.S.

NOTES:

1. ALL DIMENSIONS ARE SUBJECT TO MANUFACTURING TOLERANCES.
2. RAIL ELEMENTS SHALL BE FURNISHED SHOPCURVED, CONCAVE OR CONVEX, FOR RADII LESS THAN 150 FEET.
3. THE STEEL FOR RAIL ELEMENTS AND BOLTS SHALL CONFORM TO SPECIFICATION SECTION 02841 W–BEAM AND THRIE–BEAM GUIDE RAIL.
4. FOR W–BEAM GUIDE RAIL NOTES REFER TO DRAWING TD300.01.
5. STANDARD WASHER TO BE USED ON THE LAST 50 FEET OF RUN OF END ONLY.

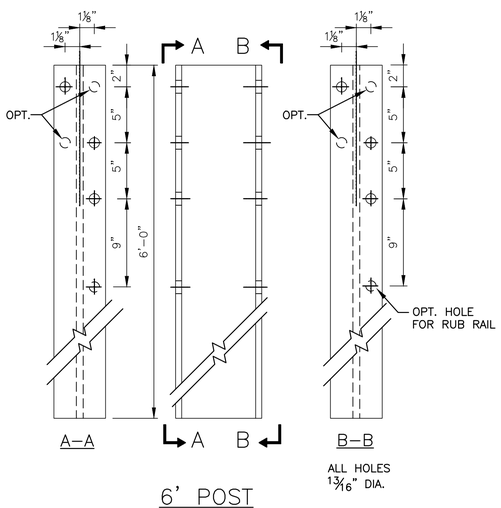

6' POST

N.T.S.

W6x8.5 OR W6x9

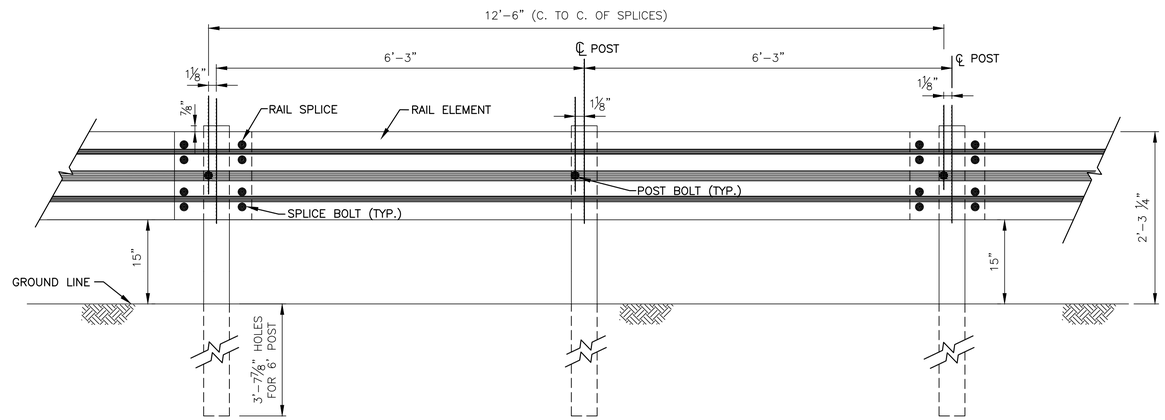

W–BEAM BARRICADE, TYPE A – CARS

N.T.S.

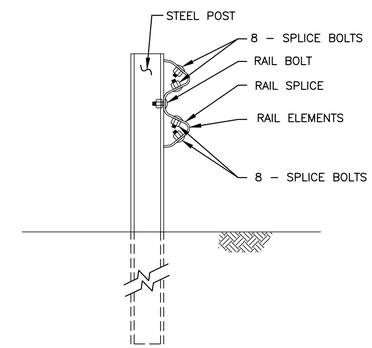

W–BEAM BARRICADE, TYPE A ASSEMBLY

N.T.S.

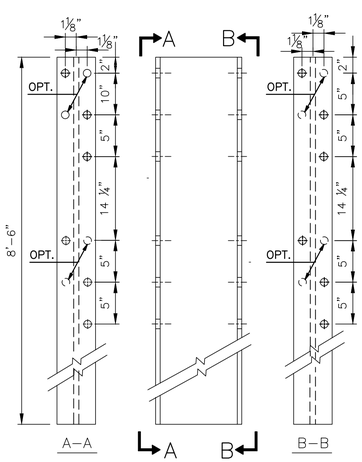

8'–6" POST

N.T.S.

W6X8.5 OR W6X9

NOTES:

ALL HOLES 1 3/16" DIA.

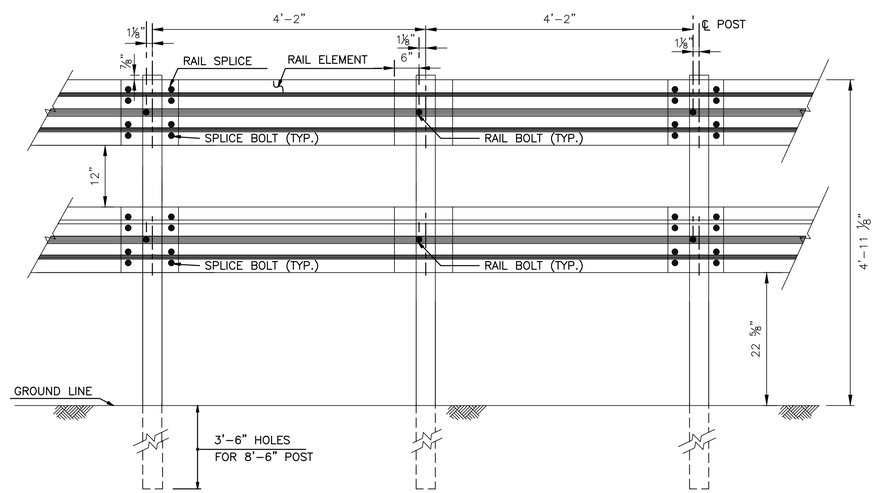

W–BEAM BARRICADE, TYPE B – TRUCKS

N.T.S.

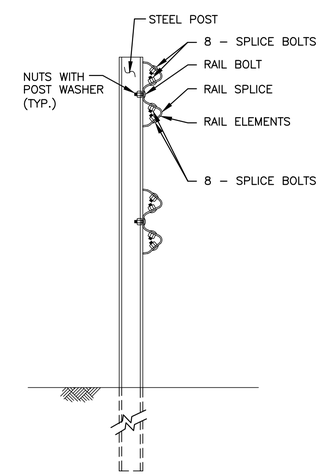

W–BEAM BARRICADE, TYPE B ASSEMBLY

N.T.S.

Sheet of

THE PORT AUTHORITY OF NY & NJ

CHIEF

No.	Date	Revision	Approved

ENGINEERING DEPARTMENT

PANYNJ Traffic Standard Details

TRAFFIC

Title

GUIDE RAIL DETAILS

W-BEAM BARRICADE TYPE A AND B

This drawing subject to conditions in contract. All inventions, ideas, designs and methods herein are reserved to Port Authority and may not be used without its written consent.
All recipients of Contract documents, including bidders and those who do not bid and their prospective subcontractors and suppliers who may receive all or a part of the Contract documents or copies thereof, shall make every effort to ensure the secure and appropriate disposal of the Contract documents to prevent further disclosure of the information contained in the documents. Secure and appropriate disposal includes methods of document destruction such as shredding or arrangements with refuse handlers that ensure that third persons will not have access to the documents' contents either before, during, or after disposal. Documents may also be returned for disposal purposes to the Contract Desk on the 3rd Floor, 3 Gateway Center, Newark NJ 07102 or the office of the Director of Procurement, One Madison Avenue, 7th Floor, New York NY 10010.
It is a violation of law for any person to alter a document in any way, unless acting under the direction of a licensed professional engineer or registered architect. If this document bearing the seal of an engineer/architect is altered, the altering engineer/architect shall affix to the document their seal and the notation "altered by" followed by their signature and the date of such alteration, and a specific description of the alteration.

Designed by Drawn by Checked by

Date **03/14/2014**

Contract Number

Drawing Number **TD300.06**

PID#

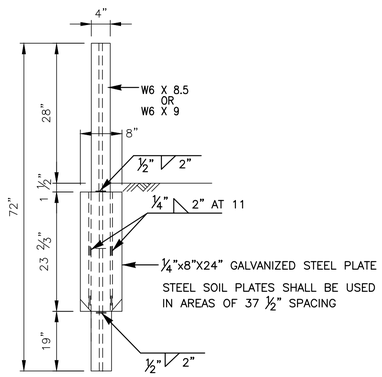

STANDARD POST
SHOWN WITH SOIL PLATE
N.T.S.

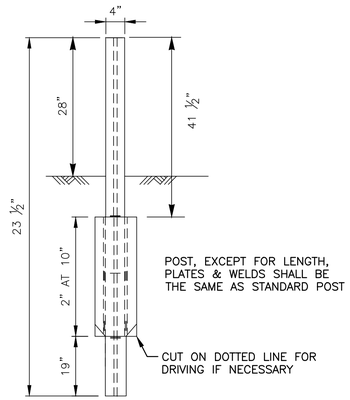

EXTRA LONG POST
SHOWN WITH SOIL PLATE
N.T.S.

GUIDE POST WITH SOIL PLATE DETAIL
N.T.S.

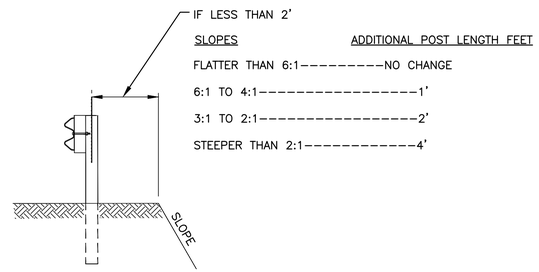

GUIDERAIL ON EMBANKMENT
N.T.S.

NOTES:

1. ALL RUNS OF GUIDE RAIL ARE TO BE ANCHORED AT BOTH ENDS.
2. THE POST SPACING FOR REDUCED DEFLECTION SHALL BE AS FOLLOWS:

DEFLECTION CLEARANCE	POST SPACING
24" MIN. 48" MAX.	37 ½"
OVER 48"	75"

3. STEEL SOIL PLATES SHALL BE USED IN AREAS OF 37 ½" POST SPACING.
4. IF THERE IS INSUFFICIENT DEPTH BETWEEN THE SURFACE OF THE GROUND AT THE GUIDE RAIL AND A CONCRETE FOOTING, ONE OF THE FOLLOWING METHODS SHALL BE EMPLOYED DEPENDING ON AVAILABLE DEPTHS:
   A. 28" TO 56" – SHORTEN THE POST TO REQUIRED DEPTH BY CUTTING THE BOTTOM OFF THE POST.
   B. 18" TO 28" – SHORTEN THE POST TO THE REQUIRED DEPTH BY CUTTING THE BOTTOM OFF THE POST AND PLACE THE POST IN 12" DIAMETER CONCRETE ENCASEMENT EXTENDING FROM THE TOP OF THE FOOTING TO THE GROUND SURFACE.
   C. LESS THAN 18" – EXCAVATE TO THE FOOTING, SHORTEN THE POST TO THE REQUIRED LENGTH BY CUTTING OFF THE LOWER END AND WELD THE 15 ¾"X9 ½" BASE PLATE (SHOWN IN THE DETAIL TITLED " BASE PLATE DETAIL" ON THE CURRENT EDITION OF THE STANDARD SHEET TITLED "HEAVY POST BLOCKED–OUT CORRUGATED BEAM MEDIAN BARRIER") TO THE BOTTOM. BOLT THE POST TO THE FOOTING USING A METHOD APPROVED BY THE ENGINEER.
5. FOR DETAILS ON RAIL ELEMENT AND SPLICE HARDWARE, SEE DRAWING TD300.02 ONLY 12 GAGE RAIL SHALL BE USED UNLESS OTHERWISE SHOWN ON THE PLANS.
6. BLOCKOUT MATERIAL, PLASTIC, SYNTHETIC OR TIMBER SHALL BE APPROVED BY THE ENGINEER PRIOR TO INSTALLATION.
7. THE OFFSET OF THE GUIDERAIL OR MEDIAN BARRIER SHALL BE MEASURED FROM FACE OF CURB TO FACE OF RAIL. THE RAIL MOUNTING HEIGHT OF ALL GUIDERAIL OR MEDIAN BARRIER PLACED BEHIND THE CURB (REGARDLESS OF CURB HEIGHT OR SPEED) SHALL BE MEASURED FROM THE PAVEMENT SURFACE WHEN THE OFFSET IS 12" OR LESS AND TO THE GROUND SURFACE UNDER THE FACE OF THE RAIL WHEN THE OFFSET IS GREATER THAN 120 FEET.
8. BEAMS TO BE ERECTED ON A RADIUS OF 150 FEET OR LESS SHALL BE SHOP WORKED TO THE REQUIRED CURVATURE.

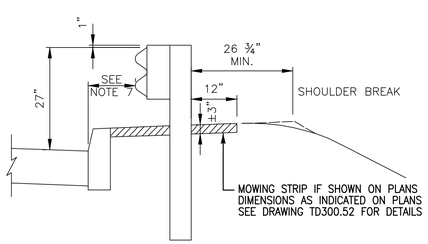

TYPICAL SECTION FOR
CORRUGATED BLOCKED–OUT
GUIDE RAIL SHOWN IN FILL
N.T.S.

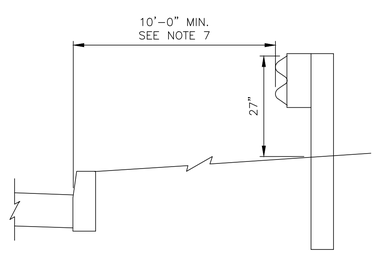

TYPICAL SECTION FOR
CORRUGATED BLOCKED–OUT
GUIDE RAIL
N.T.S.

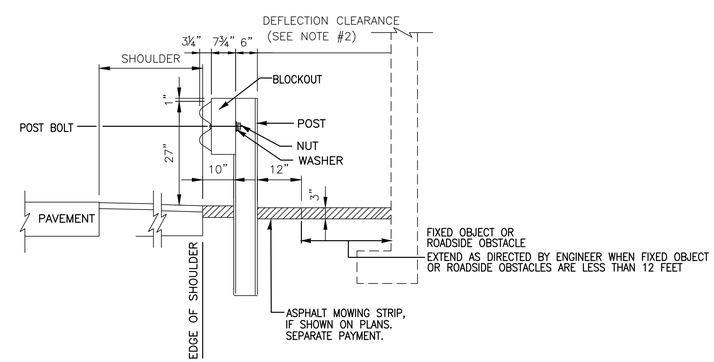

TYPICAL SECTION FOR CORRUGATED
BLOCKED–OUT GUIDE RAIL SHOWN
PAST FIXED OBJECT
N.T.S.

Sheet of

THE PORT AUTHORITY
OF NY & NJ

CHIEF

No.	Date	Revision	Approved

ENGINEERING DEPARTMENT

PANYNJ
Traffic Standard
Details

TRAFFIC

Title
GUIDE RAIL DETAILS

GUIDE RAIL POST
INSTALLATION DETAIL

This drawing subject to conditions in contract. All inventions, ideas, designs and methods herein are reserved to Port Authority and may not be used without its written consent.
All recipients of Contract documents, including bidders and those who do not bid and their prospective subcontractors and suppliers who may receive all or a part of the Contract documents or copies thereof, shall make every effort to ensure the secure and appropriate disposal of the Contract documents to prevent further disclosure of the information contained in the documents. Secure and appropriate disposal includes methods of document destruction such as shredding or arrangements with refuse handlers that ensure that third persons will not have access to the documents' contents either before, during, or after disposal. Documents may also be returned for disposal purposes to the Contract Desk on the 3rd Floor, 3 Gateway Center, Newark NJ 07102 or the office of the Director of Procurement, One Madison Avenue, 7th Floor, New York NY 10010.
It is a violation of law for any person to alter a document in any way, unless acting under the direction of a licensed professional engineer or registered architect. If this document bearing the seal of an engineer/architect is altered, the altering engineer/architect shall affix to the document their seal and the notation "altered by" followed by their signature and the date of such alteration, and a specific description of the alteration.

Designed by Drawn by Checked by

Date **03/14/2014**

Contract Number

Drawing Number **TD300.07**

PID#

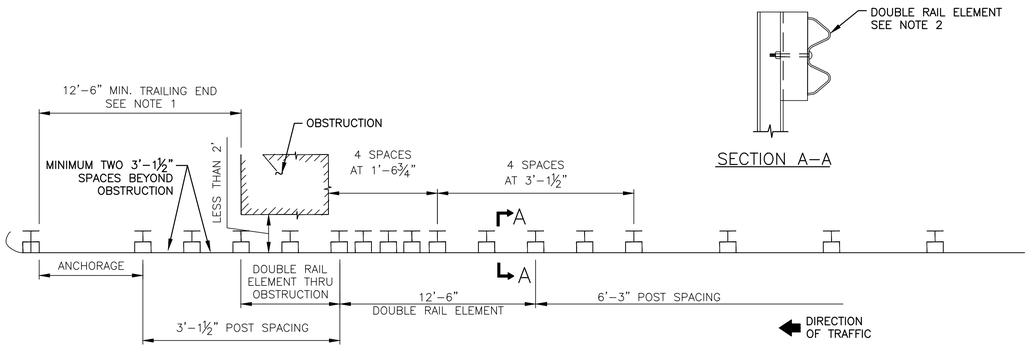

SECTION A–A

WHERE CLEARANCE FROM BACK OF RAIL TO OBSTRUCTION IS LESS THAN 2'

N.T.S.

NOTES:
TD300.23.07

1. WHERE A CRASHWORTHY END TREATMENT IS SHOWN AT THE TRAILING END ON THE CONTRACT DRAWINGS, THE POST SPACING AND DOUBLE RAIL ELEMENT FOR THE GUIDE RAIL SHALL BE THE SAME AS THE APPROACH END.
2. WHERE DOUBLE RAIL ELEMENT IS REQUIRED, THE ADDITIONAL RAIL ELEMENT SHOULD BE ADDED BEHIND THE CONTINUOUS FRONT RAIL.

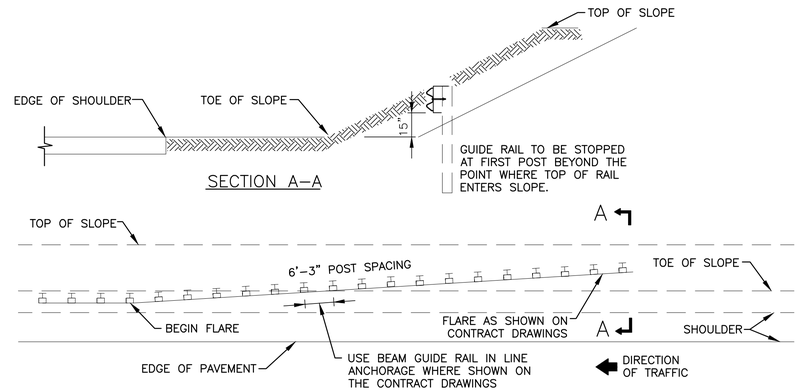

GUIDE RAIL FOR CUTS (END BURIED IN SLOPE)

N.T.S.

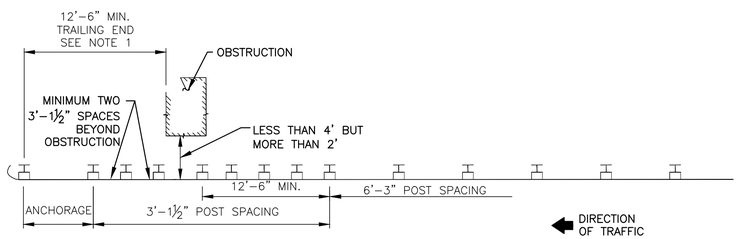

WHERE CLEARANCE FROM BACK OF RAIL TO OBSTRUCTION IS MORE THAN 2' BUT LESS THAN 4'

N.T.S.

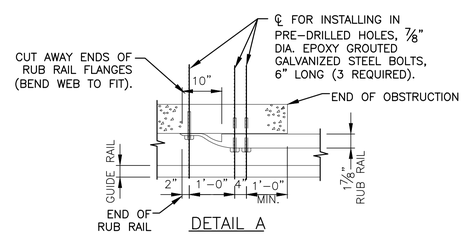

DETAIL A

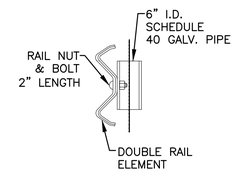

DETAIL B

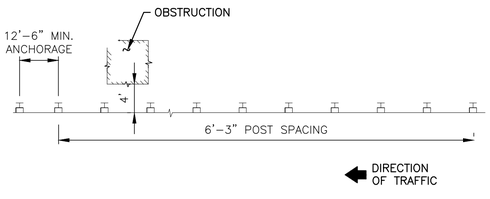

WHERE CLEARANCE FROM BACK OF RAIL TO OBSTRUCTION IS 4' OR GREATER

N.T.S.

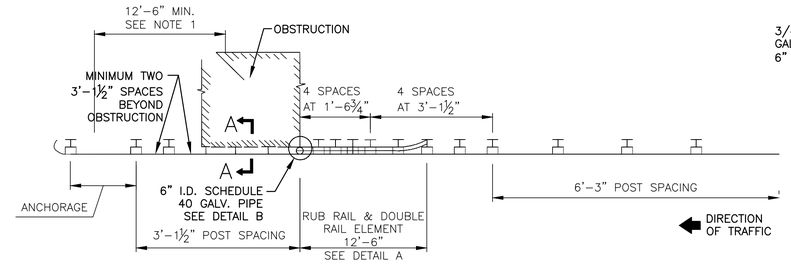

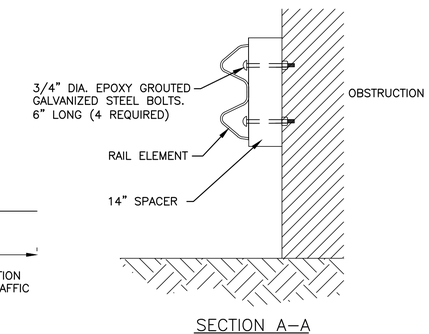

SECTION A–A

WHERE RAIL ELEMENT IS ATTACHED TO OBSTRUCTION

N.T.S.

Sheet of

THE PORT AUTHORITY OF NY & NJ

CHIEF

No.	Date	Revision	Approved

ENGINEERING DEPARTMENT

PANYNJ Traffic Standard Details

TRAFFIC

Title
GUIDE RAIL DETAILS

W-BEAM GUIDE RAIL INSTALLATION LAYOUT DETAIL

This drawing subject to conditions in contract. All inventions, ideas, designs and methods herein are reserved to Port Authority and may not be used without its written consent.
All recipients of Contract documents, including bidders and those who do not bid and their prospective subcontractors and suppliers who may receive all or a part of the Contract documents or copies thereof, shall make every effort to ensure the secure and appropriate disposal of the Contract documents to prevent further disclosure of the information contained in the documents. Secure and appropriate disposal includes methods of document destruction such as shredding or arrangements with refuse handlers that ensure that third persons will not have access to the documents' contents either before, during, or after disposal. Documents may also be returned for disposal purposes to the Contract Desk on the 3rd Floor, 3 Gateway Center, Newark NJ 07102 or the office of the Director of Procurement, One Madison Avenue, 7th Floor, New York NY 10010.
It is a violation of law for any person to alter a document in any way, unless acting under the direction of a licensed professional engineer or registered architect. If this document bearing the seal of an engineer/architect is altered, the altering engineer/architect shall affix to the document their seal and the notation "altered by" followed by their signature and the date of such alteration, and a specific description of the alteration.

Designed by | Drawn by | Checked by

Date **03/14/2014**

Contract Number

Drawing Number **TD300.08**

PID#

NOTES:

1. WHERE A CRASHWORTHY END TREATMENT (SRT, ET-PLUS, ETC.) IS SHOWN AT THE TRAILING END ON THE CONTRACT DRAWINGS, THE POST SPACING AND DOUBLE RAIL ELEMENT FOR THE GUIDE RAIL SHALL BE THE SAME AS THE APPROACH END.
2. WHERE DOUBLE RAIL ELEMENT IS REQUIRED, THE ADDITIONAL RAIL ELEMENT SHOULD BE ADDED BEHIND THE CONTINUOUS FRONT RAIL.

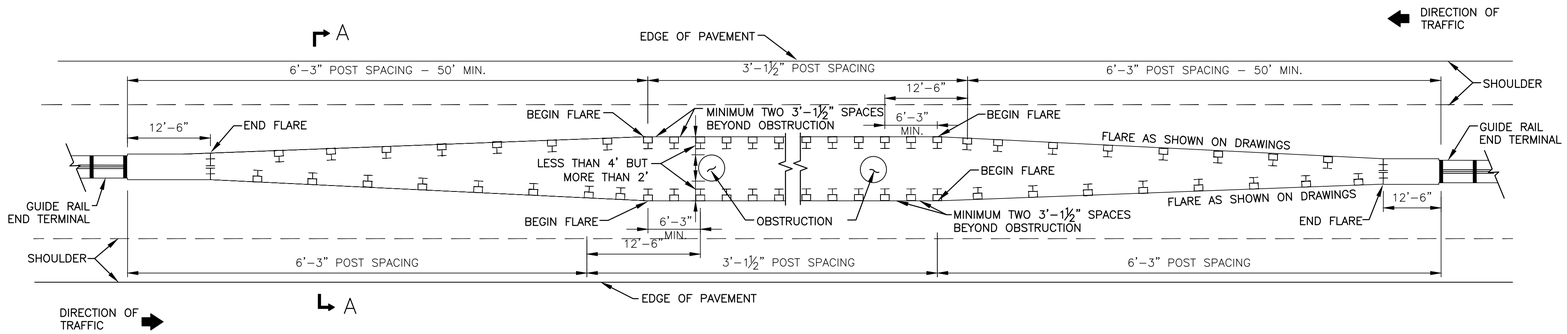

MEDIAN GUIDE RAIL WHEN CLEARANCE FROM BACK OF RAIL TO OBSTRUCTION IS MORE THAN 2' BUT LESS THAN 4'

N.T.S.

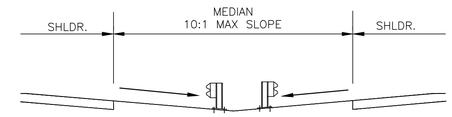

SECTION A–A

NOTE:

10.1 MAX. SLOPES TO BEGIN 100 FEET IN ADVANCE OF GUIDE RAIL TERMINALS.

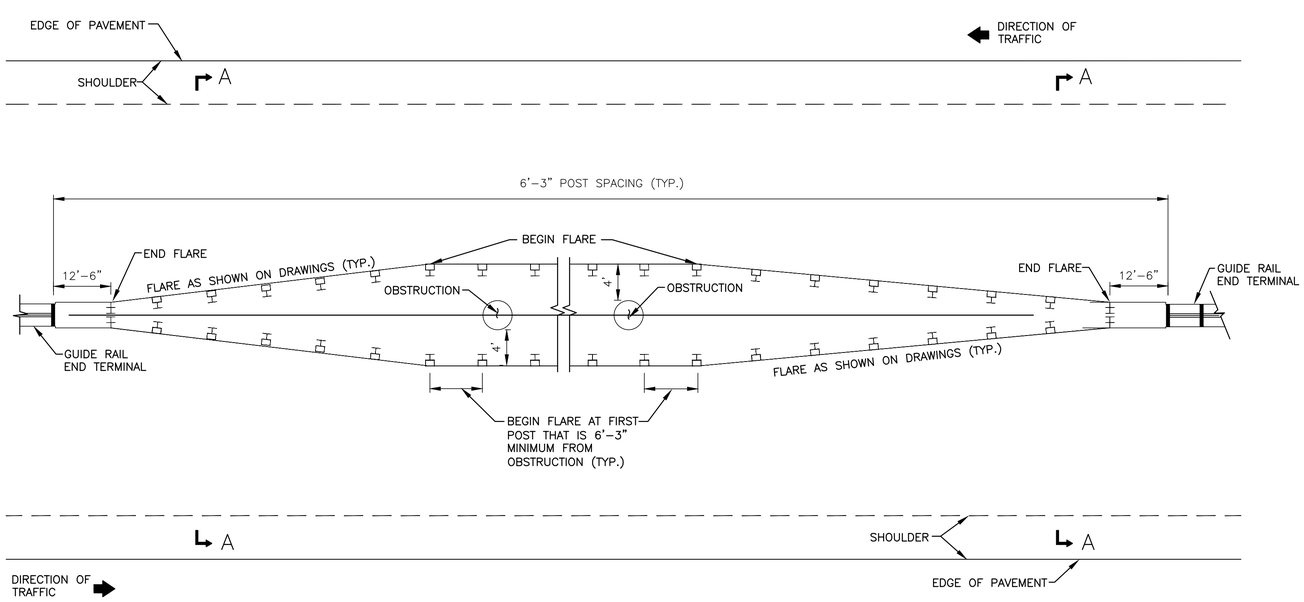

MEDIAN GUIDE RAIL WHEN CLEARANCE FROM BACK OF RAIL TO OBSTRUCTION IS 4' OR GREATER

N.T.S.

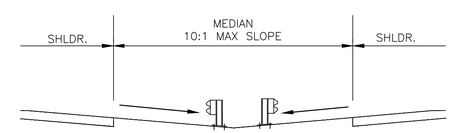

SECTION A–A

NOTE:

10.1 MAX. SLOPES TO BEGIN 100 FEET IN ADVANCE OF GUIDE RAIL TERMINALS.

Sheet of

THE PORT AUTHORITY OF NY & NJ

CHIEF

No.	Date	Revision	Approved

ENGINEERING DEPARTMENT

PANYNJ Traffic Standard Details

TRAFFIC

Title

GUIDE RAIL DETAILS

W-BEAM MEDIAN GUIDE RAIL INSTALLATION LAYOUT DETAIL

This drawing subject to conditions in contract. All inventions, ideas, designs and methods herein are reserved to Port Authority and may not be used without its written consent.
All recipients of Contract documents, including bidders and those who do not bid and their prospective subcontractors and suppliers who may receive all or a part of the Contract documents or copies thereof, shall make every effort to ensure the secure and appropriate disposal of the Contract documents to prevent further disclosure of the information contained in the documents. Secure and appropriate disposal includes methods of document destruction such as shredding or arrangements with refuse handlers that ensure that third persons will not have access to the documents' contents either before, during, or after disposal. Documents may also be returned for disposal purposes to the Contract Desk on the 3rd Floor, 3 Gateway Center, Newark NJ 07102 or the office of the Director of Procurement, One Madison Avenue, 7th Floor, New York NY 10010.
It is a violation of law for any person to alter a document in any way, unless acting under the direction of a licensed professional engineer or registered architect. If this document bearing the seal of an engineer/architect is altered, the altering engineer/architect shall affix to the document their seal and the notation "altered by" followed by their signature and the date of such alteration, and a specific description of the alteration.

Designed by Drawn by Checked by

Date **03/14/2014**

Contract Number

Drawing Number **TD300.09**

PID#

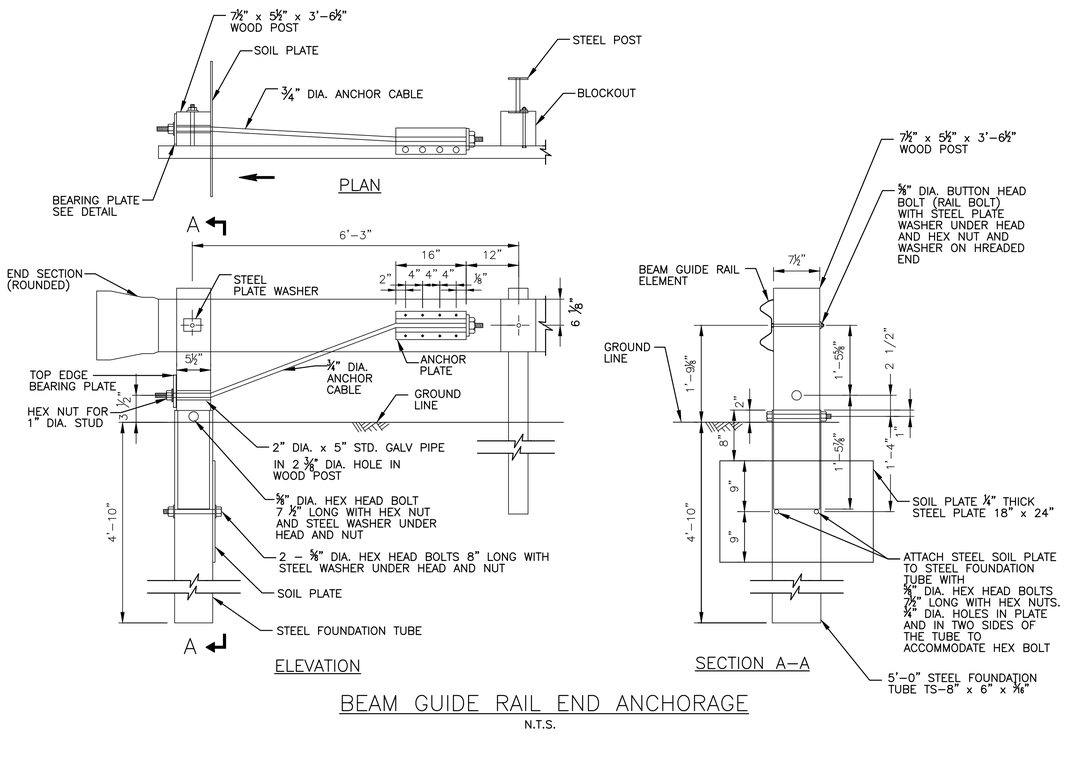

BEAM GUIDE RAIL END ANCHORAGE

N.T.S.

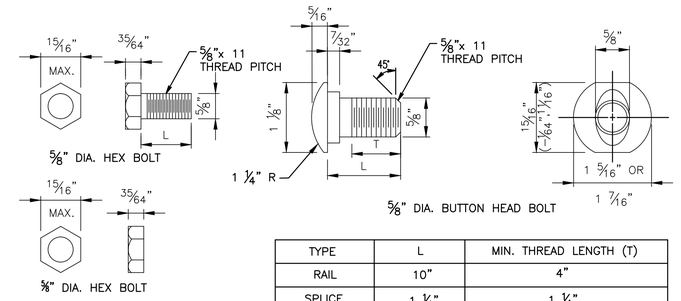

TYPE	L	MIN. THREAD LENGTH (T)
RAIL	10"	4"
SPLICE	1 ¼"	1 ¼"

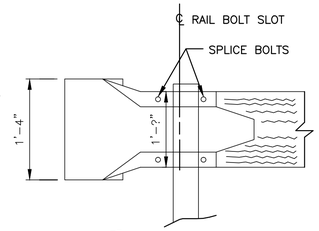

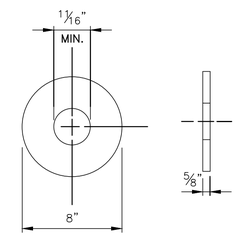

STEEL WASHER

N.T.S.

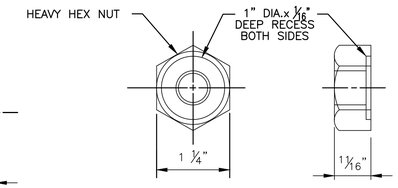

RAIL NUT & BOLT

N.T.S.

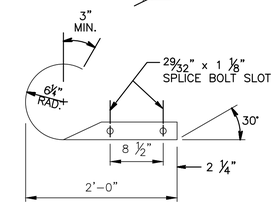

END SECTION (ROUNDED)

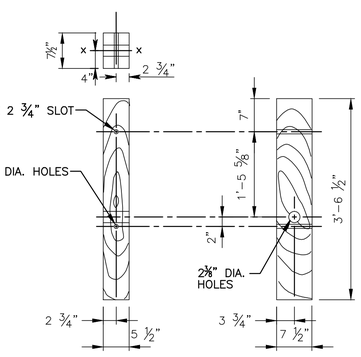

WOOD POST

N.T.S.

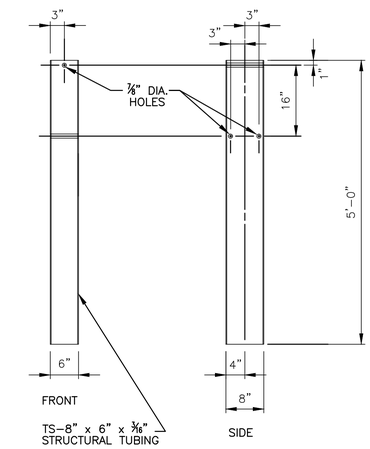

STEEL FOUNDATION TUBE

N.T.S.

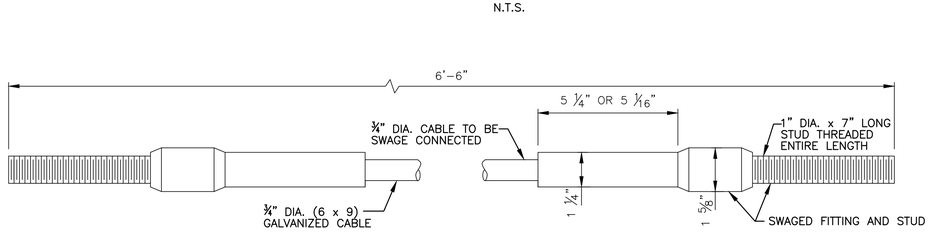

CABLE ASSEMBLY

N.T.S.

¾" CABLE SEE NOTE 1 IN STANDARD SWAGED CONNECTION TD300.10

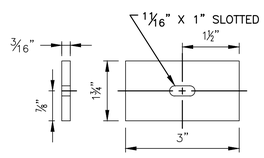

STEEL PLATE WASHER

NOTE:

OTHER ANCHOR CABLE ASSEMBLIES MAY BE USED. MINIMUM BREAKING STRENGTH OF ASSEMBLY SHALL BE 40,000 LBS.

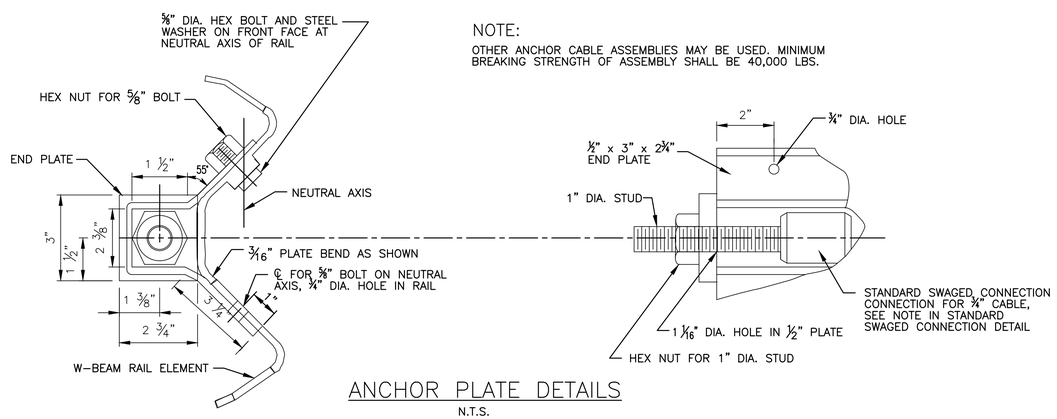

ANCHOR PLATE DETAILS

N.T.S.

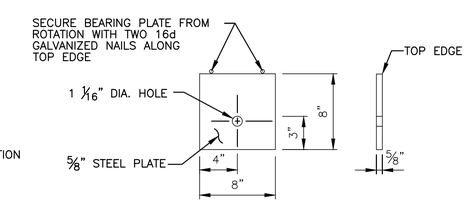

BEARING PLATE

N.T.S.

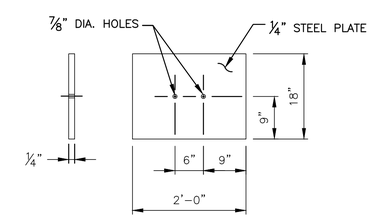

SOIL PLATE

N.T.S.

Sheet of

THE PORT AUTHORITY OF NY & NJ

CHIEF

No.	Date	Revision	Approved

ENGINEERING DEPARTMENT

PANYNJ
Traffic Standard Details

TRAFFIC

Title

GUIDE RAIL DETAILS

W-BEAM GUIDE RAIL ANCHORAGE

This drawing subject to conditions in contract. All inventions, ideas, designs and methods herein are reserved to Port Authority and may not be used without its written consent.
All recipients of Contract documents, including bidders and those who do not bid and their prospective subcontractors and suppliers who may receive all or a part of the Contract documents or copies thereof, shall make every effort to ensure the secure and appropriate disposal of the Contract documents to prevent further disclosure of the information contained in the documents. Secure and appropriate disposal includes methods of document destruction such as shredding or arrangements with refuse handlers that ensure that third persons will not have access to the documents' contents either before, during, or after disposal. Documents may also be returned for disposal purposes to the Contract Desk on the 3rd Floor, 3 Gateway Center, Newark NJ 07102 or the office of the Director of Procurement, One Madison Avenue, 7th Floor, New York NY 10010.
It is a violation of law for any person to alter a document in any way, unless acting under the direction of a licensed professional engineer or registered architect. If this document bearing the seal of an engineer/architect is altered, the altering engineer/architect shall affix to the document their seal and the notation "altered by" followed by their signature and the date of such alteration, and a specific description of the alteration.

Designed by	Drawn by	Checked by

Date **03/14/2014**

Contract Number

Drawing Number **TD300.10**

PID#

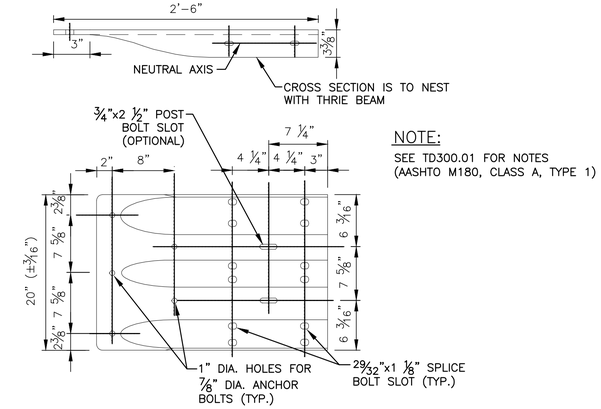

NOTE:

SEE TD300.01 FOR NOTES (AASHTO M180, CLASS A, TYPE 1)

TERMINAL CONNECTOR

N.T.S.

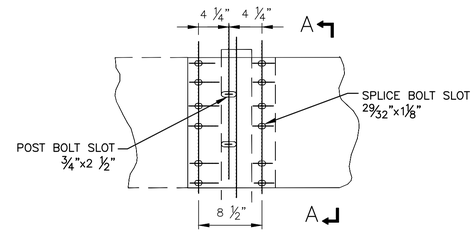

ELEVATION

(AASHTO M180, CLASS A, TYPE 1)

THRIE BEAM SPLICE

N.T.S.

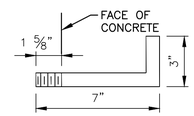

7/8 " ANCHOR BOLT

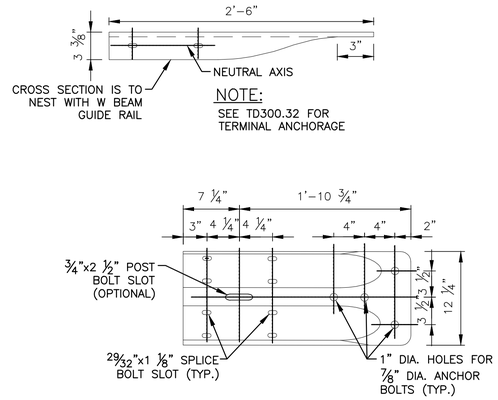

NOTE:

SEE TD300.32 FOR TERMINAL ANCHORAGE

TERMINAL CONNECTOR

(AASHTO M180, CLASS B, TYPE 1)
SEE TD300.01 FOR NOTES

NOTES:

1. EACH WELDED ATTACHMENT OF WIRE TO FERRULE SHALL DEVELOP THE TENSILE STRENGTH OF THE WIRE.
2. THREADED STEEL INSERT WITH SOLID BOTTOM TAPPED TO A MINIMUM THREADED DEPTH OF 2½" FOR USE WITH ⅞"–9x2½" GALVANIZED H.S. HEX BOLT & A 15/16" I.D., 2¼" O.D., 5/32" THICK, TYPE A, PLAIN WASHER.
3. FOUR (4) BOLTS AND FOUR (4) WASHERS TO BE PROVIDED WITH EACH ASSEMBLY.
4. WIRES SHOWN ARE MINIMUM ALLOWABLE SIZE AND SHALL CONFORM TO THE REQUIREMENT OF A.S.T.M. A510, GRADE 1030 AND HAVE A MINIMUM TENSILE STRENGTH OF 100,000 p.s.i..
5. FERRULES SHALL BE MADE OF STEEL MEETING THE REQUIREMENTS OF A.S.T.M. A108, GRADE 12L14. INSERTS SHALL BE TAPPED TO THE DIMENSIONAL REQUIREMENTS SPECIFIED IN A.S.T.M. A563 FOR NUTS RECEIVING GALVANIZED BOLTS.
6. BOLTS SHALL CONFORM TO THE REQUIREMENTS OF A.S.T.M. A325 OR A449 AND SHALL BE THREADED FULL LENGTH. WASHERS SHALL BE MADE OF STEEL AND SHALL MEET THE DIMENSIONAL REQUIREMENTS OF A.S.T.M. B272 TYPE A PLAIN WASHERS. BOTH SHALL BE GALVANIZED IN ACCORDANCE WITH A.S.T.M. A153.
7. WIRE DIAMETERS, MATERIALS REQUIREMENTS, FERRULE MATERIALS REQUIREMENTS AND EXTERNAL DIAMETERS MAY BE ALTERED PROVIDED MANUFACTURER DEMONSTRATES REVISED DESIGN IS EQUIVALENT TO THE DESIGN SHOWN IN THIS STANDARD.
8. DIMENSIONAL TOLERANCE NOT SHOWN OR IMPLIED ARE INTENDED TO BE THOSE CONSISTENT WITH THE PROPER FUNCTIONING OF THE PART, INCLUDING ITS APPEARANCE, AND ACCEPTED MANUFACTURING PRACTICE.

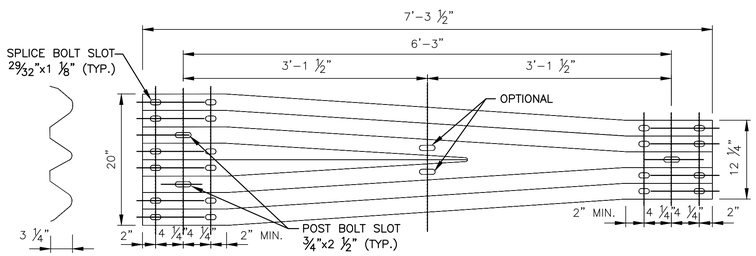

W–BEAM TO THRIE BEAM TRANSITION SECTION

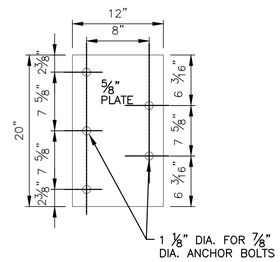

BACKUP PLATE FOR TERMINAL CONNECTOR

NOTE:

ALL HOLES 1 1/8" DIA. FOR 7/8" DIA. ANCHOR BOLTS

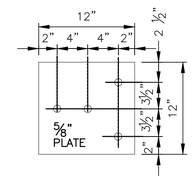

BACKUP PLATE FOR TERMINAL CONNECTOR

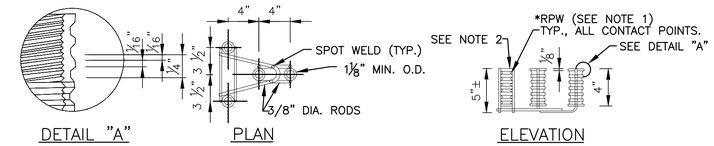

TERMINAL CONNECTOR ANCHORAGE

W BEAM TERMINAL CONNECTOR

N.T.S.

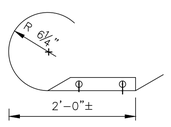

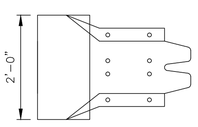

END SECTION (ROUNDED)

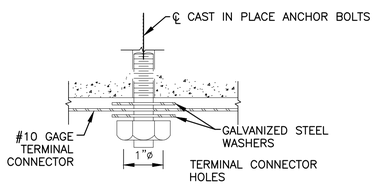

TERMINAL ANCHORAGE

THRIE BEAM DETAILS

N.T.S.

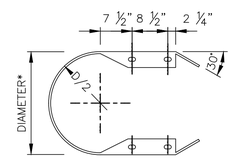

* STANDARD DIMENSIONS OF 12.5", 24" AND 30" ARE SUGGESTED

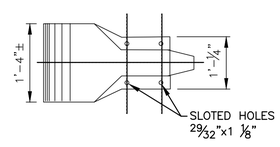

W–BEAM END SECTION (BUFFER)

N.T.S.

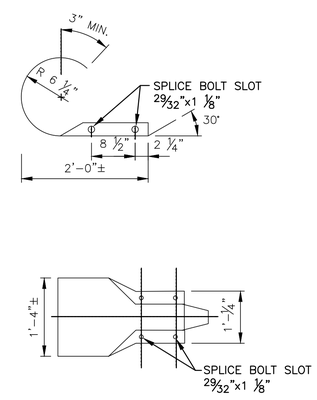

W–BEAM END SECTION (ROUNDED)

N.T.S.

Sheet of

THE PORT AUTHORITY OF NY & NJ

CHIEF

No.	Date	Revision	Approved

ENGINEERING DEPARTMENT

PANYNJ Traffic Standard Details

TRAFFIC

Title

GUIDE RAIL DETAILS

THRIE-BEAM & W-BEAM GUIDE RAIL TERMINAL CONNECTION & END SECTION

This drawing subject to conditions in contract. All inventions, ideas, designs and methods herein are reserved to Port Authority and may not be used without its written consent.
All recipients of Contract documents, including bidders and those who do not bid and their prospective subcontractors and suppliers who may receive all or a part of the Contract documents or copies thereof, shall make every effort to ensure the secure and appropriate disposal of the Contract documents to prevent further disclosure of the information contained in the documents. Secure and appropriate disposal includes methods of document destruction such as shredding or arrangements with refuse handlers that ensure that third persons will not have access to the documents' contents either before, during, or after disposal. Documents may also be returned for disposal purposes to the Contract Desk on the 3rd Floor, 3 Gateway Center, Newark NJ 07102 or the office of the Director of Procurement, One Madison Avenue, 7th Floor, New York NY 10010.
It is a violation of law for any person to alter a document in any way, unless acting under the direction of a licensed professional engineer or registered architect. If this document bearing the seal of an engineer/architect is altered, the altering engineer/architect shall affix to the document their seal and the notation "altered by" followed by their signature and the date of such alteration, and a specific description of the alteration.

Designed by	Drawn by	Checked by

Date **03/14/2014**

Contract Number

Drawing Number **TD300.11**

PID#

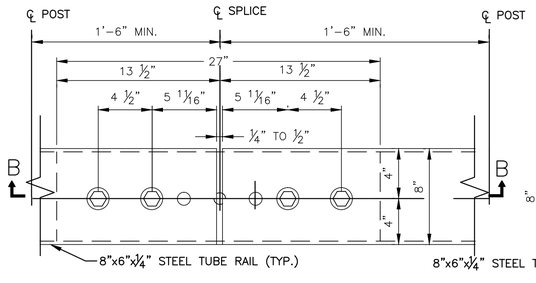

PLAN

NOTE:
WELD OR GALVANIZED PROTRUSIONS NOT PERMITTED ON TOP OR BOTTOM INSIDE WALLS IN SPLICE AREA

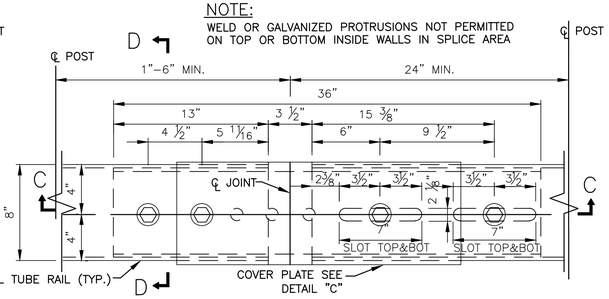

AT FIXED END OF SPAN

AT EXPANSION END OF SPAN

PLAN

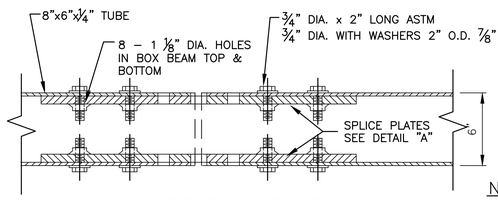

SECTION B–B
TYPICAL RAIL SPLICE DETAIL

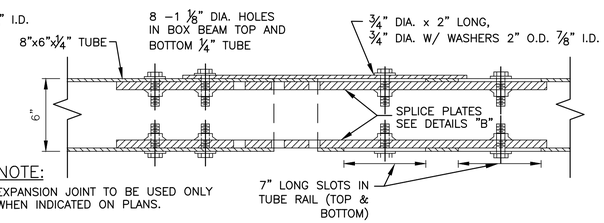

NOTE:
EXPANSION JOINT TO BE USED ONLY WHEN INDICATED ON PLANS.

SECTION C–C
TYPICAL EXPANSION JOINT DETAIL

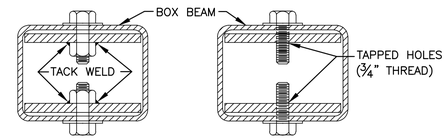

ALTERNATE SECTION D–D

ALTERNATE SECTION D–D

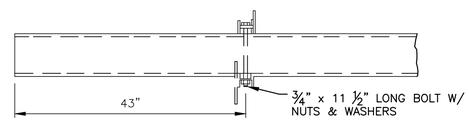

NOTES:

1. MINIMUM LENGTH OF RAIL TUBE TO BE 18'.
2. SEE CONTRACT PLANS FOR LAYOUT DETAILS OF BOX BEAM MEDIAN BARRIERS.
3. FOR MATERIAL REQUIREMENTS AND CONSTRUCTION DETAILS, SEE STANDARD SPECIFICATION SECTION 02840, ENTITLED "BOX BEAM GUIDE RAIL".
4. CURVED MEDIAN BARRIER ERECTED WITH A RADIUS OF 720' OR LESS SHALL BE SHOP WORKED TO THE REQUIRED CURVATURE.
5. THE CONTRACTOR SHALL HAVE THE OPTION OF USING EITHER THE SPLICE PLATES WITH THE ¾" HEX NUTS WELDED TO THEM, OR THE SPLICE PLATES WITH THE BOLT HOLES DRILLED AND TAPPED AS SHOWN IN DETAILS "A" AND DETAIL "B" ALTERNATIVES ABOVE.
6. FOR DETAILS AND SPACING OF REFLECTORS, SEE DETAIL TD300.14

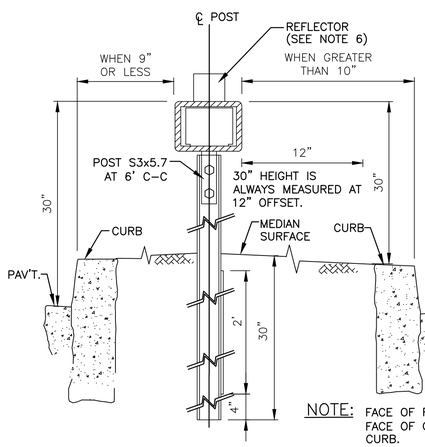

NOTE: FACE OF RAIL SHOULD BE OFFSET EITHER 9" FROM FACE OF CURB OR MORE THAN 10' FROM FACE OF CURB.

TYPICAL SECTION ON RAISED MEDIANS

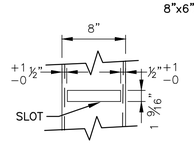

SECTION A–A

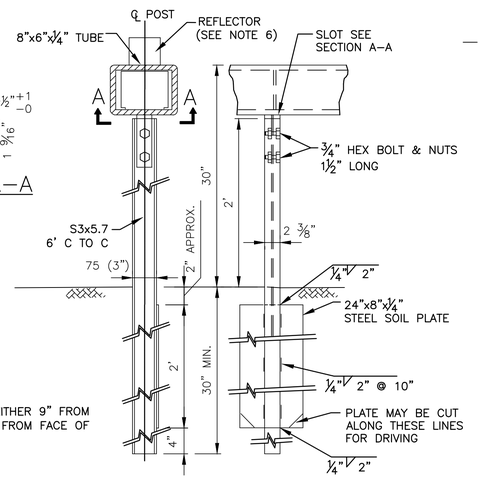

TYPICAL SECTION FOR FLUSH MEDIAN

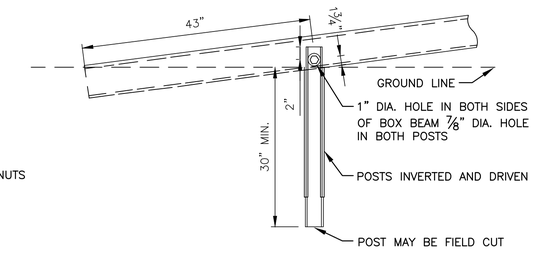

TYPICAL END TREATMENT
TYPE B WIDE MEDIANS

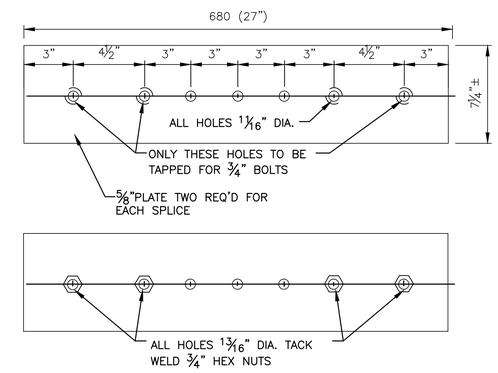

DETAIL "A" ALTERNATE SPLICE PLATE

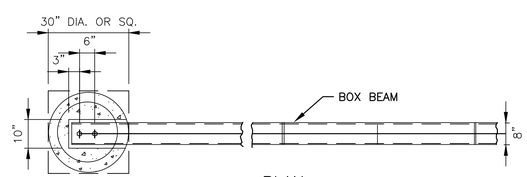

PLAN

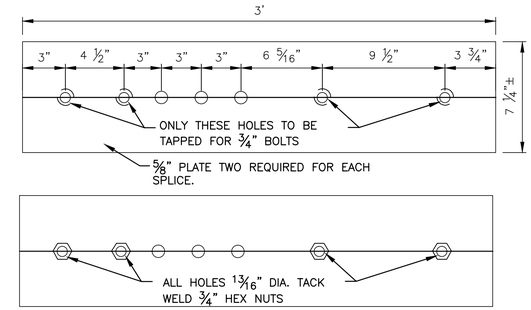

DETAIL "B" ALTERNATE SPLICE PLATE FOR EXPANSION JOINT

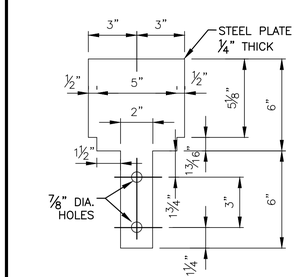

RAIL SUPPORT PLATE

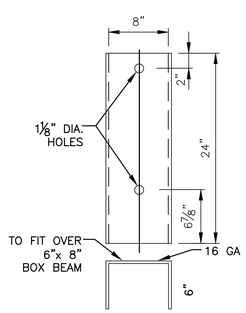

DETAIL "C"
COVER PLATE

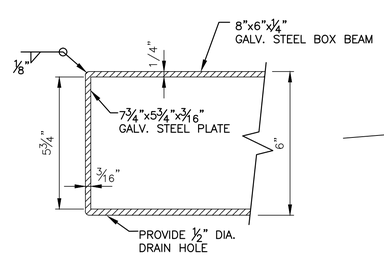

BOX BEAM
END TREATMENT

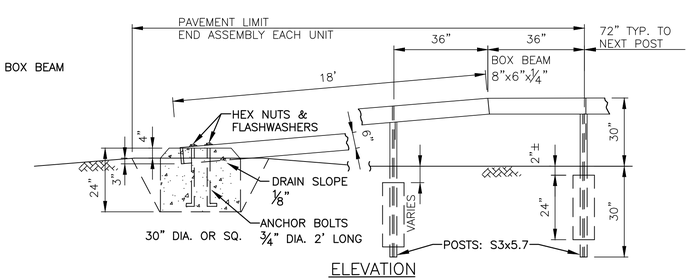

ELEVATION

TYPICAL END TREATMENT – TYPE A
NARROW MEDIANS

Sheet of

THE PORT AUTHORITY OF NY & NJ

CHIEF

No.	Date	Revision	Approved

ENGINEERING DEPARTMENT

PANYNJ Traffic Standard Details

TRAFFIC

Title

GUIDE RAIL DETAILS

BOX BEAM MEDIAN BARRIER DETAILS

This drawing subject to conditions in contract. All inventions, ideas, designs and methods herein are reserved to Port Authority and may not be used without its written consent.
All recipients of Contract documents, including bidders and those who do not bid and their prospective subcontractors and suppliers who may receive all or a part of the Contract documents or copies thereof, shall make every effort to ensure the secure and appropriate disposal of the Contract documents to prevent further disclosure of the information contained in the documents. Secure and appropriate disposal includes methods of document destruction such as shredding or arrangements with refuse handlers that ensure that third persons will not have access to the documents' contents either before, during, or after disposal. Documents may also be returned for disposal purposes to the Contract Desk on the 3rd Floor, 3 Gateway Center, Newark NJ 07102 or the office of the Director of Procurement, One Madison Avenue, 7th Floor, New York NY 10010.
It is a violation of law for any person to alter a document in any way, unless acting under the direction of a licensed professional engineer or registered architect. If this document bearing the seal of an engineer/architect is altered, the altering engineer/architect shall affix to the document their seal and the notation "altered by" followed by their signature and the date of such alteration, and a specific description of the alteration.

Designed by	Drawn by	Checked by

Date **03/14/2014**

Contract Number

Drawing Number **TD300.12**

PID#

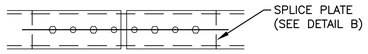

PLAN

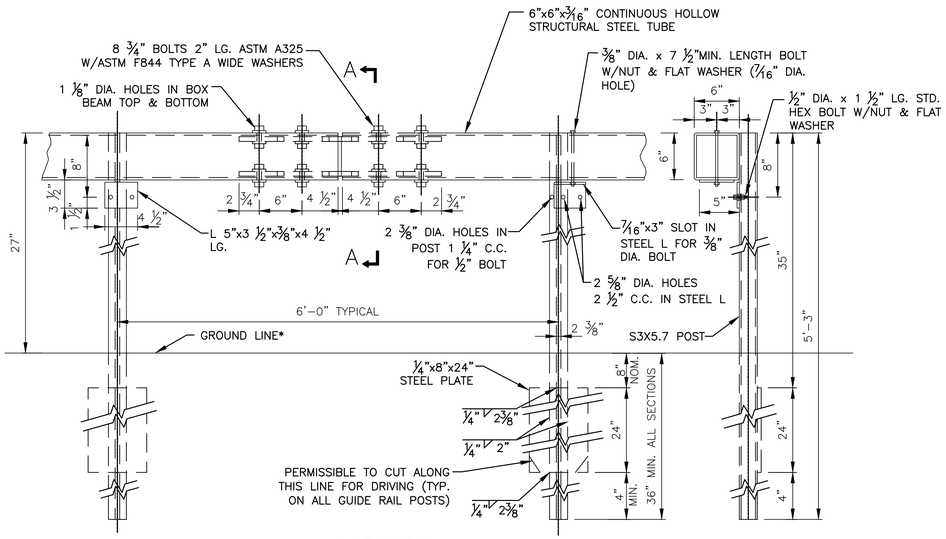

ELEVATION

TYPICAL TANGENT SECTION

N.T.S.

* WHERE GUIDE RAIL IS SET FLUSH TO THE CURB FACE, THE MOUNTING HEIGHT MUST BE MEASURED FROM THE TOP OF PAVEMENT. WHEN THE GUIDE RAIL IS NOT CONSTRUCTED FLUSH WITH THE FACE OF THE CURB, THE MOUNTING HEIGHT MUST BE MEASURED FROM THE GROUND SURFACE. THE HEIGHT OF THE CURB IN FRONT OF THE GUIDE RAIL MUST NOT EXCEED 4".

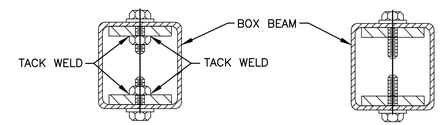

SECTION A–A

SPLICE PLATE SHOWING 3/4" HEX NUTS WELDED TO PLATE

SECTION A–A

SPLICE PLATE SHOWING TAPPED BOLT HOLES

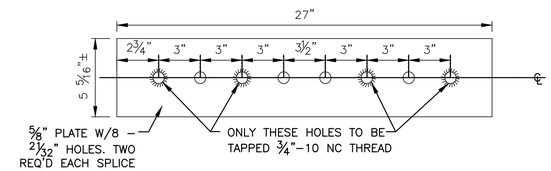

DETAIL "B" SPLICE PLATE SHOWING TAPPED BOLT HOLES

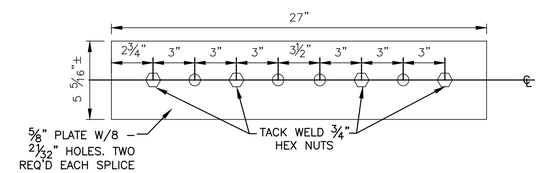

DETAIL "B" SPLICE PLATE SHOWING 3/4" HEX NUTS WELDED TO PLATE

NOTES:

1. POST SPACING SHALL BE 6'–0" EXCEPT WHERE REDUCED POST SPACING IS INDICATED ON THE CONTRACT DRAWINGS. POSTS ARE CONNECTED TO RAIL AT 6'–0" SPACING WHEN 3'–0" OR 2'–0" REDUCED POST SPACING IS REQUIRED.
2. FOR MATERIAL REQUIREMENTS AND CONSTRUCTION DETAILS, SEE STANDARD SPECIFICATION SECTION 02840, ENTITLED "BOX BEAM GUIDE RAIL".
3. THE LINE OF BOX BEAM GUIDE RAIL, WHEN COMPLETED, SHALL PRESENT A SMOOTH AND PLEASING GRADE LINE IN BOTH HORIZONTAL AND VERTICAL LANES.
4. CURVED GUIDE RAIL – CURVED BOX BEAM GUIDE RAIL WITH A RADIUS OF 720 FEET OR LESS SHALL BE SHOP WORKED TO THE REQUIRED CURVATURE.

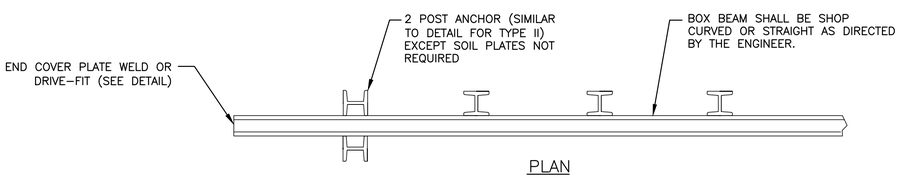

PLAN

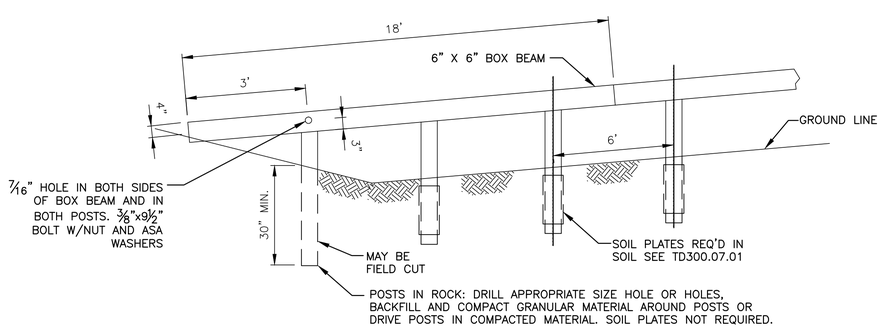

ELEVATION

TYPICAL TREATMENT FOR BURIED ENDS – ROCK OR SOIL

N.T.S.

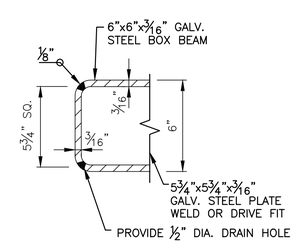

BOX BEAM END COVER PLATE DETAIL

N.T.S.

Sheet of

THE PORT AUTHORITY OF NY & NJ

CHIEF

No.	Date	Revision	Approved

ENGINEERING DEPARTMENT

PANYNJ Traffic Standard Details

TRAFFIC

Title

GUIDE RAIL DETAILS

BOX BEAM TANGENT SECTION AND TREATMENT FOR BURIED END DETAIL

This drawing subject to conditions in contract. All inventions, ideas, designs and methods herein are reserved to Port Authority and may not be used without its written consent.
All recipients of Contract documents, including bidders and those who do not bid and their prospective subcontractors and suppliers who may receive all or a part of the Contract documents or copies thereof, shall make every effort to ensure the secure and appropriate disposal of the Contract documents to prevent further disclosure of the information contained in the documents. Secure and appropriate disposal includes methods of document destruction such as shredding or arrangements with refuse handlers that ensure that third persons will not have access to the documents' contents either before, during, or after disposal. Documents may also be returned for disposal purposes to the Contract Desk on the 3rd Floor, 3 Gateway Center, Newark NJ 07102 or the office of the Director of Procurement, One Madison Avenue, 7th Floor, New York NY 10010.
It is a violation of law for any person to alter a document in any way, unless acting under the direction of a licensed professional engineer or registered architect. If this document bearing the seal of an engineer/architect is altered, the altering engineer/architect shall affix to the document their seal and the notation "altered by" followed by their signature and the date of such alteration, and a specific description of the alteration.

Designed by Drawn by Checked by

Date **03/14/2014**

Contract Number

Drawing Number **TD300.13**

PID#

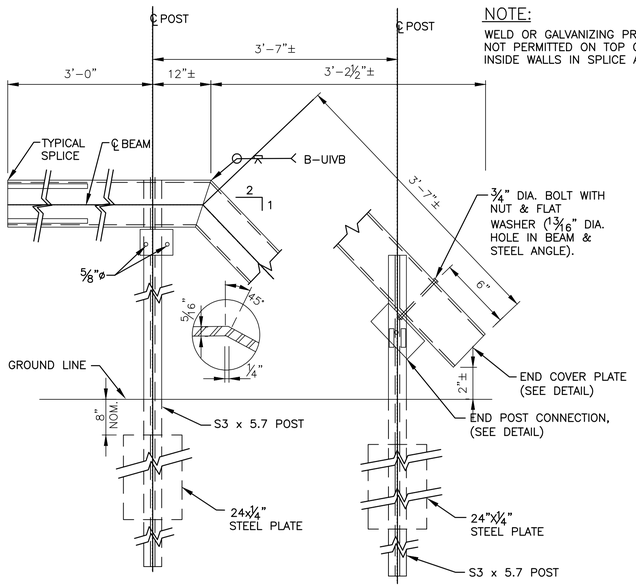

NOTE:

WELD OR GALVANIZING PROTRUSION NOT PERMITTED ON TOP OR BOTTOM INSIDE WALLS IN SPLICE AREA.

ELEVATION

TYPE I END ASSEMBLY

N.T.S.

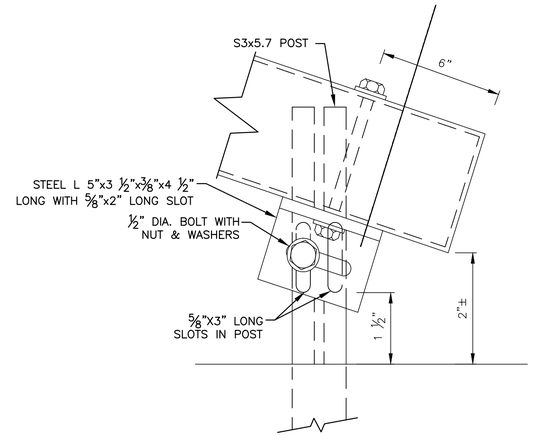

ELEVATION

TYPE 1 END POST CONNECTION DETAIL

N.T.S.

NOTES

1. 72 FOOT APPROACH AND TERMINAL ENDS SHOULD BE TERMINATED WITH A TYPE I END ASSEMBLY EXCEPT WHEN TERMINATED IN A BACK SLOPE. THE TYPICAL TREATMENT FOR BURIED ENDS SHOULD BE USED TO TERMINATE IN A BACK SLOPE, AND MAY BE INCLUDED AS PART OF THE 72' APPROACH AND TERMINAL END.

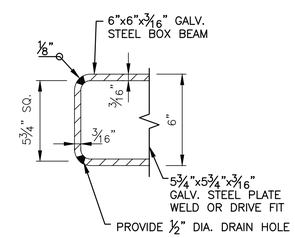

BOX BEAM END COVER PLATE DETAIL

N.T.S.

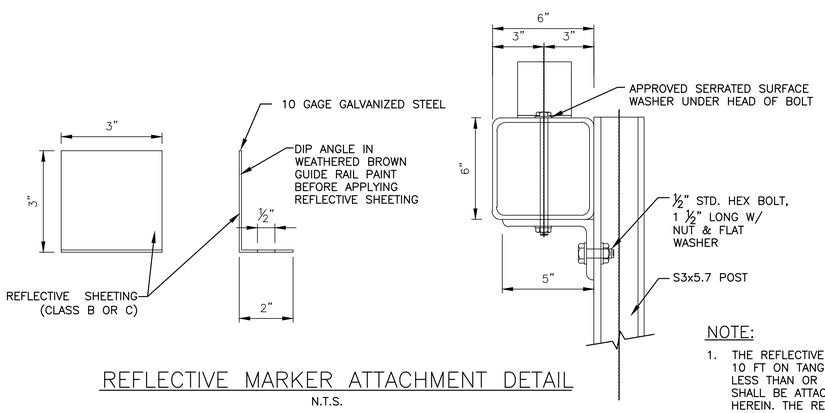

REFLECTIVE MARKER ATTACHMENT DETAIL

N.T.S.

NOTE:

1. THE REFLECTIVE MARKERS SHALL BE ATTACHED TO THE BEAM EVERY 10 FT ON TANGENTS AND EVERY 5 FT ON CURVES WITH RAD. LESS THAN OR EQUAL TO 200 FT. THE REFLECTIVE MARKERS SHALL BE ATTACHED TO THE RAIL AS SHOWN IN THE DETAILS HEREIN. THE REFLECTIVE MARKERS SHALL CONFORM TO THE COLOR REQUIREMENTS FOR DELINEATORS IN THE MUTCD. RELFECTIVE MARKERS SHALL NOT BE REQUIRED IN THE APPROACH, TERMINAL ENDS, OR END ASSEMBLIES OF THE GUIDE RAIL AND THE END TREATMENT OF MEDIAN BARRIER.

Sheet of

THE PORT AUTHORITY OF NY & NJ

CHIEF

No.	Date	Revision	Approved

ENGINEERING DEPARTMENT

PANYNJ Traffic Standard Details

TRAFFIC

Title

GUIDE RAIL DETAILS

BOX BEAM TYPE I END ASSEMBLY DETAIL

This drawing subject to conditions in contract. All inventions, ideas, designs and methods herein are reserved to Port Authority and may not be used without its written consent.
All recipients of Contract documents, including bidders and those who do not bid and their prospective subcontractors and suppliers who may receive all or a part of the Contract documents or copies thereof, shall make every effort to ensure the secure and appropriate disposal of the Contract documents to prevent further disclosure of the information contained in the documents. Secure and appropriate disposal includes methods of document destruction such as shredding or arrangements with refuse handlers that ensure that third persons will not have access to the documents' contents either before, during, or after disposal. Documents may also be returned for disposal purposes to the Contract Desk on the 3rd Floor, 3 Gateway Center, Newark NJ 07102 or the office of the Director of Procurement, One Madison Avenue, 7th Floor, New York NY 10010.
It is a violation of law for any person to alter a document in any way, unless acting under the direction of a licensed professional engineer or registered architect. If this document bearing the seal of an engineer/architect is altered, the altering engineer/architect shall affix to the document their seal and the notation "altered by" followed by their signature and the date of such alteration, and a specific description of the alteration.

Designed by Drawn by Checked by

Date **03/14/2014**

Contract Number

Drawing Number **TD300.14**

PID#

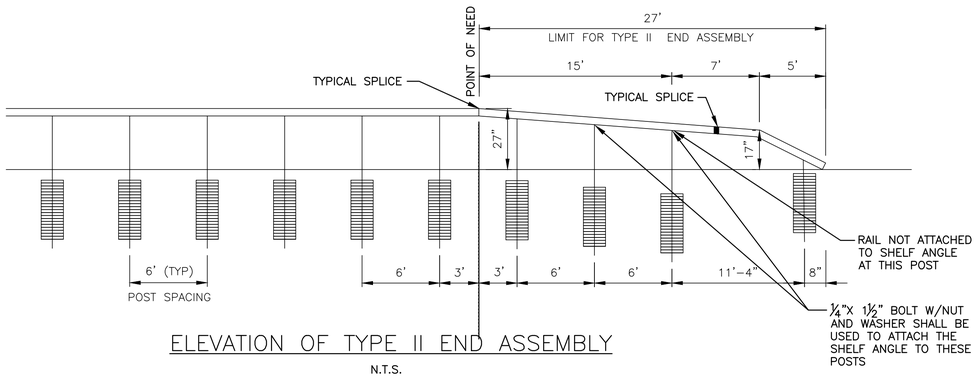

ELEVATION OF TYPE II END ASSEMBLY

N.T.S.

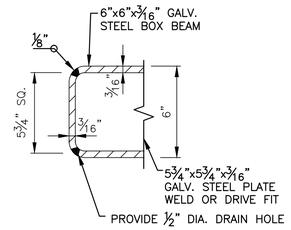

BOX BEAM END COVER PLATE DETAIL

N.T.S.

NOTES

1. THE TYPE II END ASSEMBLY SHALL BE USED AT DRIVEWAYS, SIDEWALKS AND OTHER RESTRICTED AREAS WHERE THE 72 FOOT APPROACH OR TERMINAL END CANNOT BE ACCOMMODATED. LOCATIONS OF THE TYPE II END ASSEMBLY SHALL BE SHOWN ON THE CONTRACT DRAWINGS OR AS DIRECTED BY THE ENGINEER. THE TYPE II END ASSEMBLY SHALL BE FLARED BACK AS SHOWN IN THE DETAILS. THE CONTRACTOR SHALL USE METHOD #2 TO ACHIEVE THE FLARE. THERE WILL BE NO ADDITIONAL PAYMENT FOR THE RAIL CURVATURE UNDER THIS METHOD, WHEN RESTRICTIVE CONDITIONS DO NOT PERMIT THE STANDARD SET BACK OF 2'-9" THE FLARE RATE SHALL BE FLATTENED TO ACCOMMODATE THE REDUCED SET BACK. TO REDUCE THE FLARE RATE AND SET BACK USING METHOD #2 REDUCE THE CURVE RATE IN THE CURVED 18 FOOT RAIL ELEMENT.

   – OR –

   THE TYPE II END ASSEMBLY SHALL BE USED AT DRIVEWAYS, SIDEWALKS AND OTHER RESTRICTED AREAS WHERE THE 72 FOOT APPROACH OR TERMINAL END CANNOT BE ACCOMMODATED. LOCATIONS OF THE TYPE II END ASSEMBLY SHALL BE GIVEN ON THE PLANS OR AS DIRECTED BY THE ENGINEER. THE TYPE II END ASSEMBLY SHALL BE FLARED BACK AS SHOWN IN THE DETAILS. WHEN RESTRICTIVE CONDITIONS DO NOT PERMIT THE STANDARD SET BACK OF 2'-9" THE FLARE RATE SHALL BE FLATTENED TO ACCOMMODATE THE REDUCED SET BACK. TO REDUCE THE FLARE, FIRST FLATTEN THE FLARE RATE OF THE 27 FOOT END ASSEMBLY. ONCE THE 27 FOOT END ASSEMBLY AND THE ADJACENT 18 FOOT BOX BEAM ELEMENT IS IN A STRAIGHT LINE, FURTHER REDUCTION OF THE SET BACK IS ACHIEVED BY FLATTENING THE FLARE OF THE ENTIRE 45 FOOT SECTION. FLARE AND SET BACK IS ACCOMPLISHED BY UTILIZING PLAY IN THE SPLICE PLATES. IF SPLICE PLATES WILL NOT ACCOMMODATE THE DESIRED FLARE AND OFFSET, THE CORNERS AND/OR WIDTH OF THE PLATE SHALL BE REDUCED BY GRINDING AND THE SURFACE TREATMENT SHALL BE FIELD REPAIRED.

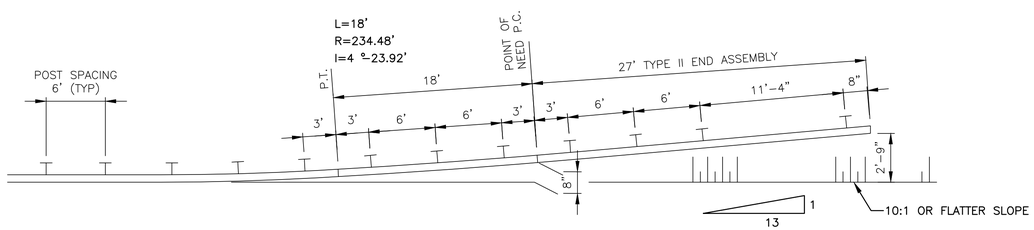

PLAN OF TYPE II END ASSEMBLY SHOWING FLARE (METHOD #2)

SEE NOTE 1

N.T.S.

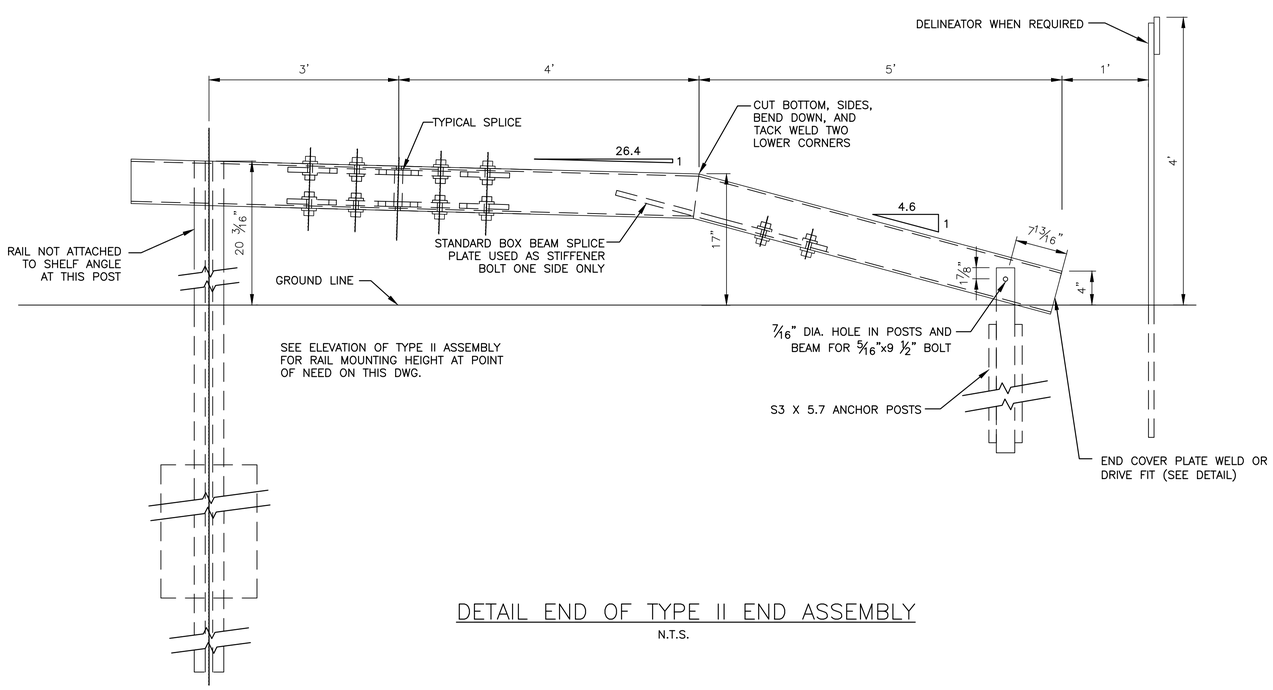

DETAIL END OF TYPE II END ASSEMBLY

N.T.S.

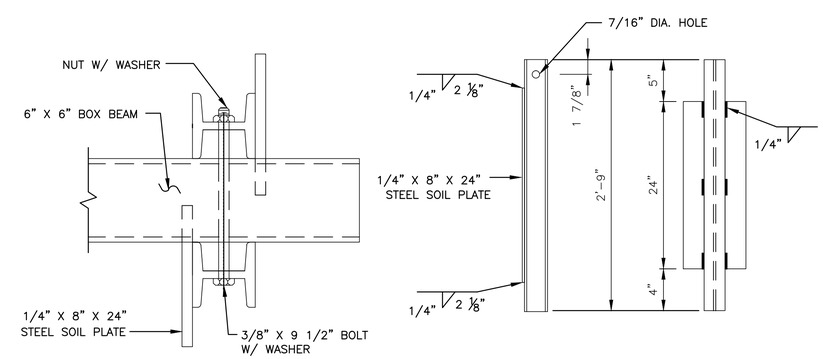

PLAN
N.T.S.

ELEVATION
N.T.S.

ANCHOR POST DETAIL (TYPE II END ASSEMBLY)

N.T.S.

Sheet of

THE PORT AUTHORITY OF NY & NJ

CHIEF

No.	Date	Revision	Approved

ENGINEERING DEPARTMENT

PANYNJ Traffic Standard Details

TRAFFIC

Title

GUIDE RAIL DETAILS

BOX BEAM TYPE II END ASSEMBLY DETAILS

This drawing subject to conditions in contract. All inventions, ideas, designs and methods herein are reserved to Port Authority and may not be used without its written consent.
All recipients of Contract documents, including bidders and those who do not bid and their prospective subcontractors and suppliers who may receive all or a part of the Contract documents or copies thereof, shall make every effort to ensure the secure and appropriate disposal of the Contract documents to prevent further disclosure of the information contained in the documents. Secure and appropriate disposal includes methods of document destruction such as shredding or arrangements with refuse handlers that ensure that third persons will not have access to the documents' contents either before, during, or after disposal. Documents may also be returned for disposal purposes to the Contract Desk on the 3rd Floor, 3 Gateway Center, Newark NJ 07102 or the office of the Director of Procurement, One Madison Avenue, 7th Floor, New York NY 10010.
It is a violation of law for any person to alter a document in any way, unless acting under the direction of a licensed professional engineer or registered architect. If this document bearing the seal of an engineer/architect is altered, the altering engineer/architect shall affix to the document their seal and the notation "altered by" followed by their signature and the date of such alteration, and a specific description of the alteration.

Designed by Drawn by Checked by

Date **03/14/2014**

Contract Number

Drawing Number **TD300.15**

PID#

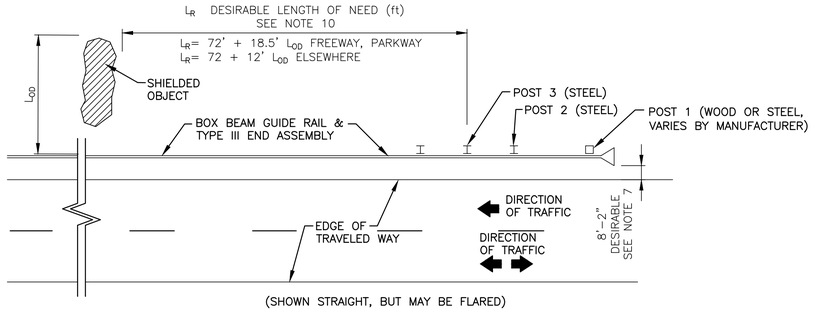

BOX BEAM END ASSEMBLY TYPE III DESIRABLE LENGTH OF NEED DETAIL

(SEE "BOX BEAM END ASSEMBLY TYPE III GRADING DETAILS" FOR GRADING)

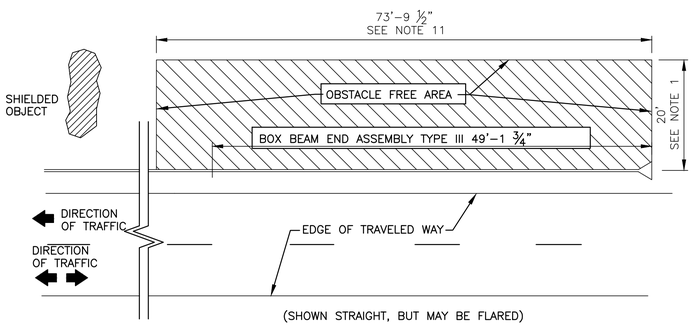

BOX BEAM END ASSEMBLY TYPE III OBSTACLE FREE AREA DETAIL

(SEE "BOX BEAM END ASSEMBLY TYPE III GRADING DETAILS" FOR GRADING)

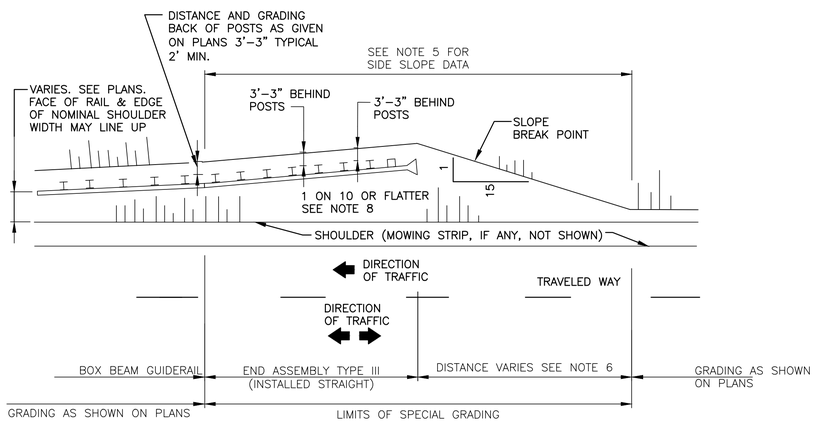

BOX BEAM END ASSEMBLY TYPE III GRADING DETAILS

(DETAIL APPLIES TO BOTH FLARED AND TANGENT INSTALLATIONS)

TABLE 1

RAIL LENGTHS	JOINTS A	JOINTS B	JOINTS C	JOINTS D	END PLATE DISTANCE E
18'	----	----	----	0	0'-4"
	----	----	0	0'-3"	1'-5"
	----	0	0'-3"	0'-11"	2'-11"
	0	0'-3"	0'-11"	1'-10"	4'-7"
24'	----	----	----	0	0'-4"
	----	----	0	0'-5"	1'-6"
	----	0	0'-5"	1'-3"	3'-2"
	0	0'-5"	1'-3"	2'-5"	5'-3"
30'	----	----	----	0	0'-4"
	----	----	0	0'-6"	1'-8"
	----	0	0'-6"	1'-6"	3'-6"
	0	0'-6"	1'-6"	3'-0"	5'-10"
36'	----	----	----	0	0'-4"
	----	----	0	0'-7"	1'-9"
	----	0	0'-7"	1'-10"	3'-9"
	0	0'-7"	1'-10"	3'-7"	6'-5"

OFFSETS FROM THEORETICAL LINE OF RAIL TO THE VARIOUS JOINTS AND END PLATE FOR COMMON LENGTHS

---- INDICATES NO FLARE INTRODUCED AT THIS JOINT AND NO OFFSET.

0 INDICATES ANGLE AT JOINT BUT NO OFFSET FROM THE THEORETICAL LINE OF GUIDE RAIL.

0'-3" INDICATES THERE IS BOTH AN ANGLE AT THE JOINT AND THE JOINT IS OFFSET FROM THE THEORETICAL LINE OF GUIDERAIL 0'-3"

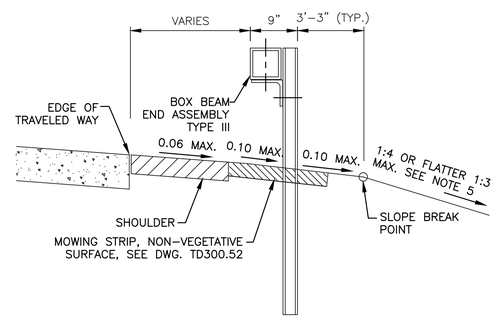

SECTION THROUGH SPECIAL GRADING AREA

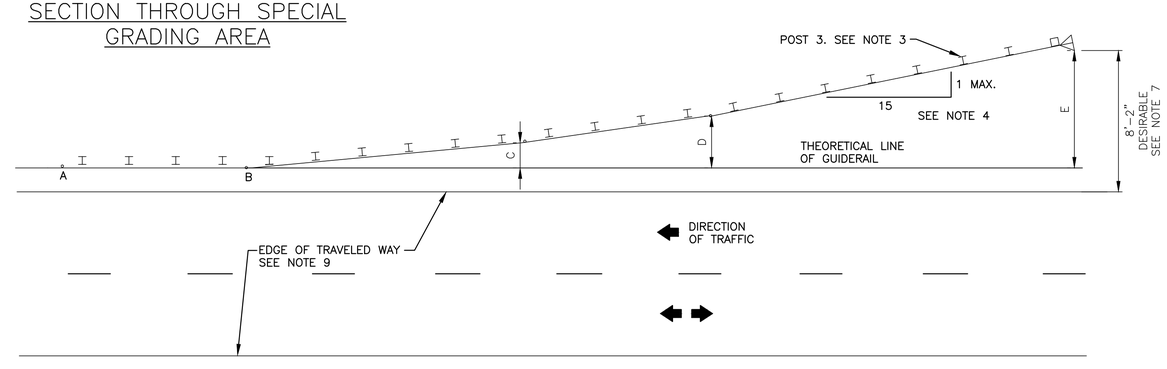

METHOD FOR INTRODUCING FLARE

(SHOWN HERE WITH ANGLES AT JOINTS B,C, & D. MOWING STRIP, IF ANY, AND SHOULDER NOT SHOWN)

(SEE "BOX BEAM END ASSEMBLY TYPE III GRADING DETAILS" FOR GRADING)

NOTES:

1. MAY BE REDUCED TO WIDTH OF DESIGN CLEAR ZONE.
2. FOR MATERIAL REQUIREMENTS AND CONSTRUCTION DETAILS, SEE STANDARD SPECIFICATION SECTION 02840, ENTITLED "BOX BEAM GUIDE RAIL".
3. REDIRECTION BEGINS AT THIS POST (NO. 3). BOX BEAM END ASSEMBLY TYPE III "GATES" FROM NOSE ASSEMBLY TO POST 3, WHICH MEANS VEHICLES HITTING TYPE III END ASSEMBLY UPSTREAM OF POST 3 PENETRATE THE TERMINAL. POST 3 IS THE BEGINNING OF LENGTH OF NEED.
4. BOX BEAM END ASSEMBLY TYPE III SHALL BE INSTALLED WITHOUT CURVATURE OR BEND. MAX FLARE RATE IS 1 ON 15 (3± –50'). FLARE TO BE DEVELOPED AT JOINTS DOWNSTREAM OF THE TYPE III END ASSEMBLY. SEE TABLE 1 FOR DIMENSIONS.
5. EMBANKMENT OR FORESLOPES WITHIN SPECIAL GRADING LIMITS SHOULD BE PREFERABLY 1 ON 4 OR FLATTER, MAXIMUM 1 ON 3 .
6. THIS DISTANCE VARIES. LENGTH TO BE 15, OR MORE, TIMES THE DIFFERENCE IN EMBANKMENT WIDTHS AT A TYPICAL POINT WELL UPSTREAM OF THE END ASSEMBLY AND THE EMBANKMENT WIDTH AT THE NOSE ASSEMBLY.
7. 8'-2" OR GREATER OFFSET DESIRABLE BETWEEN EDGE OF TRAVELED WAY AND THE SIDE OF THE TYPE III END ASSEMBLY MEASURED AT NOSE ASSEMBLY.
8. GRADING TO BE 1:10 OR FLATTER FROM EDGE OF SHOULDER TO SLOPE BREAK POINT.
9. SHOULDER PAVEMENT AND MOWING STRIP, IF ANY, NOT SHOWN.
10. LENGTH OF NEED NOT EXCEED 360' ON FACILITIES WITH OPERATING SPEED 55 MPH OR 260' WHEN OPERATING SPEED 45 MPH < 55 MPH.
11. WITH PERMISSION OF THE ENGINEER, THIS LENGTH MAY BE REDUCED TO 50' IF NECESSITATED BY R.O.W. OR ENVIRONMENTAL CONSIDERATIONS.
12. FLARE ACHIEVED AT THE JOINTS APPROXIMATELY 1° PER JOINT. SEE TABLE 1 ON THIS SHEET FOR OFFSETS TO THE JOINTS FROM THE THEORETICAL LINE OF GUIDERAIL FOR COMMON RAIL LENGTHS.

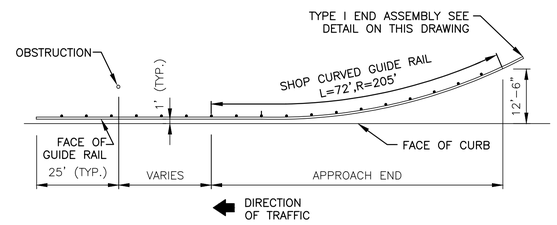

TYPICAL BOX BEAM GUIDE RAIL INSTALLATION

Sheet of

THE PORT AUTHORITY OF NY & NJ

CHIEF

No.	Date	Revision	Approved

ENGINEERING DEPARTMENT

PANYNJ Traffic Standard Details

TRAFFIC

Title

GUIDE RAIL DETAILS

BOX BEAM TYPE III END ASSEMBLY GRADING AND LAYOUT DETAILS

This drawing subject to conditions in contract. All inventions, ideas, designs and methods herein are reserved to Port Authority and may not be used without its written consent.
All recipients of Contract documents, including bidders and those who do not bid and their prospective subcontractors and suppliers who may receive all or a part of the Contract documents or copies thereof, shall make every effort to ensure the secure and appropriate disposal of the Contract documents to prevent further disclosure of the information contained in the documents. Secure and appropriate disposal includes methods of document destruction such as shredding or arrangements with refuse handlers that ensure that third persons will not have access to the documents' contents either before, during, or after disposal. Documents may also be returned for disposal purposes to the Contract Desk on the 3rd Floor, 3 Gateway Center, Newark NJ 07102 or the office of the Director of Procurement, One Madison Avenue, 7th Floor, New York NY 10010.
It is a violation of law for any person to alter a document in any way, unless acting under the direction of a licensed professional engineer or registered architect. If this document bearing the seal of an engineer/architect is altered, the altering engineer/architect shall affix to the document their seal and the notation "altered by" followed by their signature and the date of such alteration, and a specific description of the alteration.

Designed by Drawn by Checked by

Date **03/14/2014**

Contract Number

Drawing Number **TD300.16**

PID#

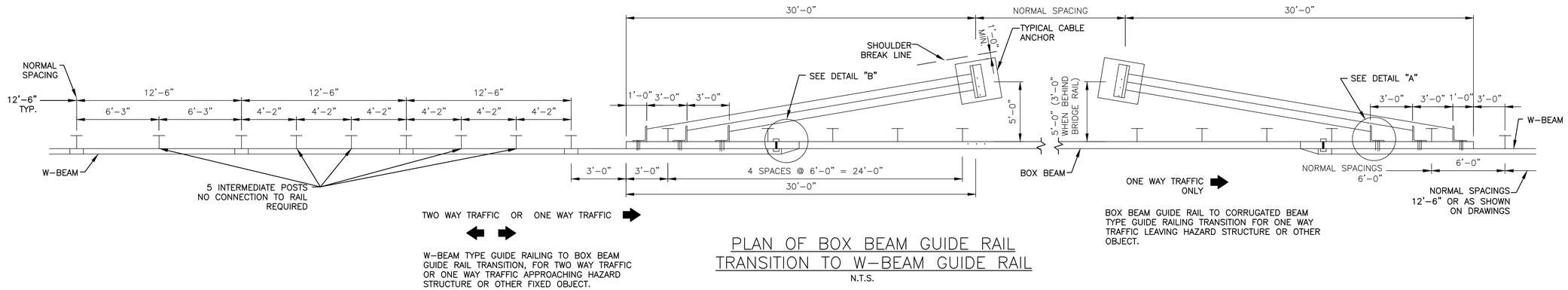

W-BEAM TYPE GUIDE RAILING TO BOX BEAM GUIDE RAIL TRANSITION, FOR TWO WAY TRAFFIC OR ONE WAY TRAFFIC APPROACHING HAZARD STRUCTURE OR OTHER FIXED OBJECT.

BOX BEAM GUIDE RAIL TO CORRUGATED BEAM TYPE GUIDE RAILING TRANSITION FOR ONE WAY TRAFFIC LEAVING HAZARD STRUCTURE OR OTHER OBJECT.

PLAN OF BOX BEAM GUIDE RAIL TRANSITION TO W-BEAM GUIDE RAIL

N.T.S.

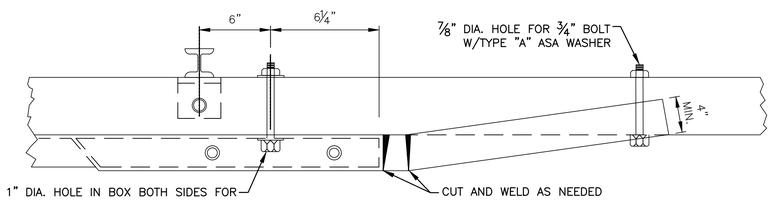

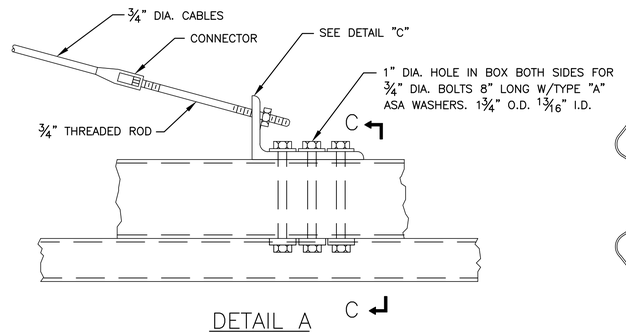

DETAIL A

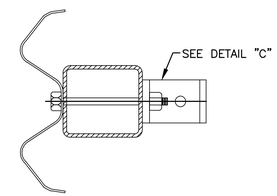

SECTION C-C

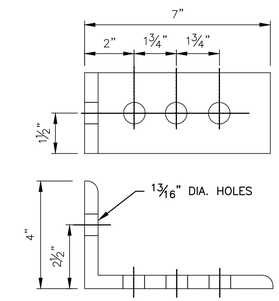

DETAIL C

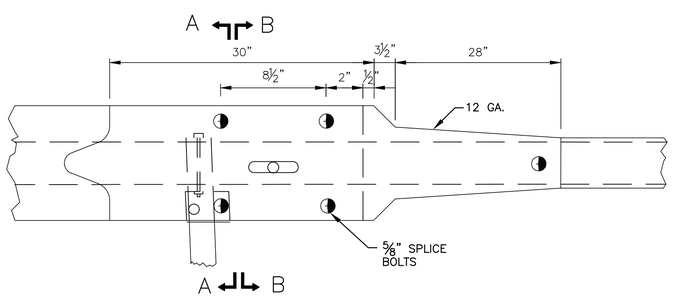

DETAIL B

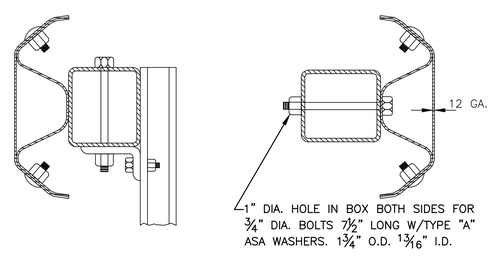

SECTION A-A

SECTION B-B

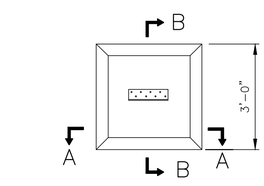

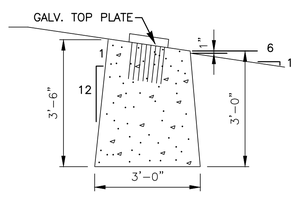

SECTION A-A

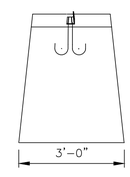

SECTION B-B

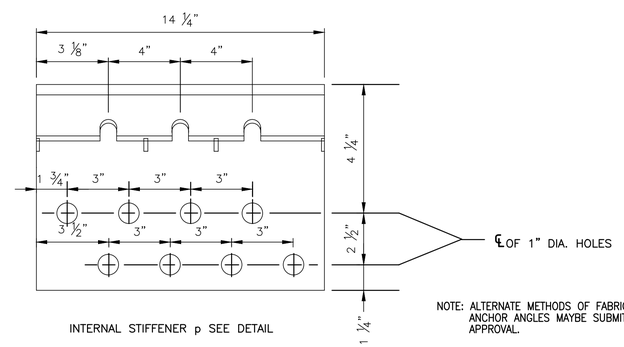

NOTE: ALTERNATE METHODS OF FABRICATING ANCHOR ANGLES MAYBE SUBMITTED FOR APPROVAL.

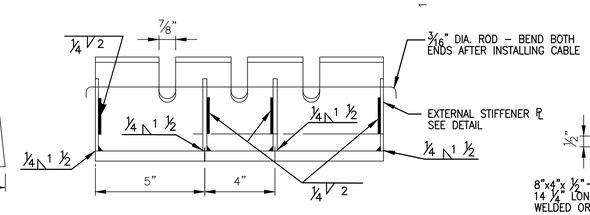

ANCHOR ANGLE DETAILS

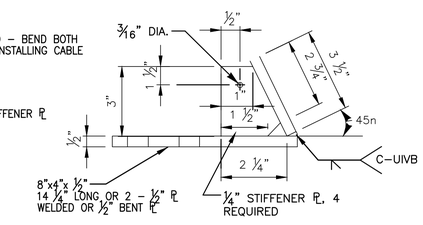

CABLE ANCHOR

N.T.S.

Sheet of

THE PORT AUTHORITY OF NY & NJ

CHIEF

No.	Date	Revision	Approved

ENGINEERING DEPARTMENT

PANYNJ Traffic Standard Details

TRAFFIC

Title

GUIDE RAIL DETAILS

BOX BEAM GUIDE RAIL TRANSITION TO W-BEAM GUIDE RAIL

This drawing subject to conditions in contract. All inventions, ideas, designs and methods herein are reserved to Port Authority and may not be used without its written consent.
All recipients of Contract documents, including bidders and those who do not bid and their prospective subcontractors and suppliers who may receive all or a part of the Contract documents or copies thereof, shall make every effort to ensure the secure and appropriate disposal of the Contract documents to prevent further disclosure of the information contained in the documents. Secure and appropriate disposal includes methods of document destruction such as shredding or arrangements with refuse handlers that ensure that third persons will not have access to the documents' contents either before, during, or after disposal. Documents may also be returned for disposal purposes to the Contract Desk on the 3rd Floor, 3 Gateway Center, Newark NJ 07102 or the office of the Director of Procurement, One Madison Avenue, 7th Floor, New York NY 10010.
It is a violation of law for any person to alter a document in any way, unless acting under the direction of a licensed professional engineer or registered architect. If this document bearing the seal of an engineer/architect is altered, the altering engineer/architect shall affix to the document their seal and the notation "altered by" followed by their signature and the date of such alteration, and a specific description of the alteration.

Designed by	Drawn by	Checked by

Date **03/14/2014**

Contract Number

Drawing Number **TD300.17**

PID#

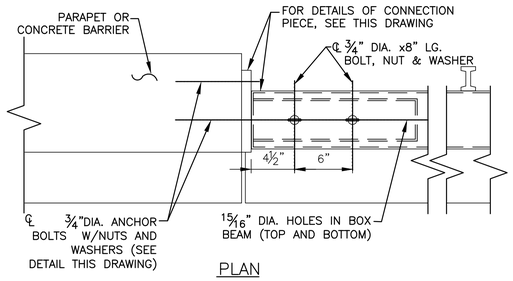

PLAN

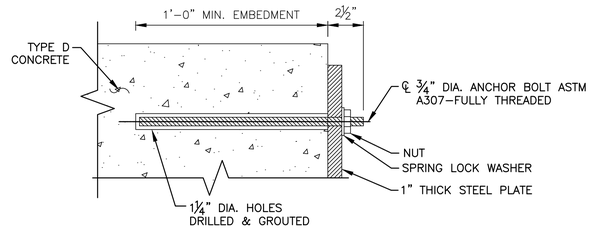

TYPICAL ANCHOR BOLT DETAIL

NOTES:

1. 1" HOLES IN CONCRETE AT 'ON-END' CONNECTIONS SHALL BE DRILLED USING FABRICATED CONNECTION PIECE AS A TEMPLATE TO FACILITATE ALIGNMENT OF COMPLETED ASSEMBLY.
2. ANCHOR BOLTS SHALL BE ¾" DIAMETER ASTM A307 FULLY THREADED. EMBEDMENT SHALL BE 1'-0" MINIMUM.
3. ANCHOR BOLT HOLES SHALL BE DRILLED AND GROUTED.

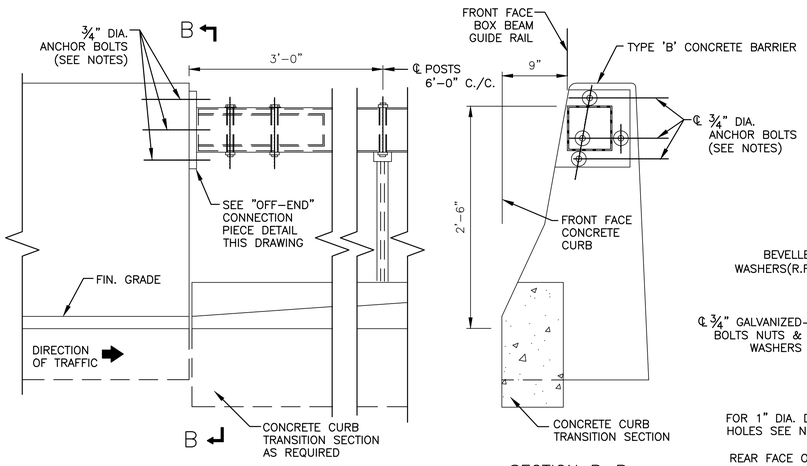

ELEVATION

SECTION B-B

OFF-END CONNECTION

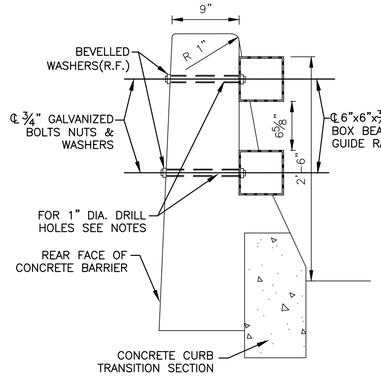

SECTION A-A

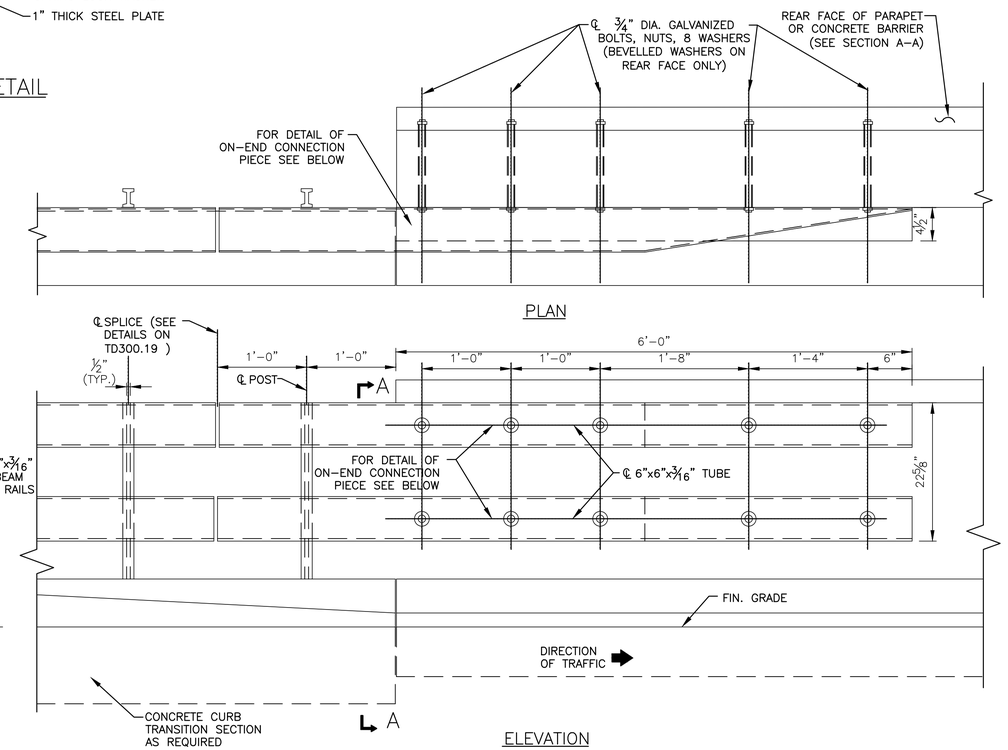

ELEVATION

ON-END CONNECTION

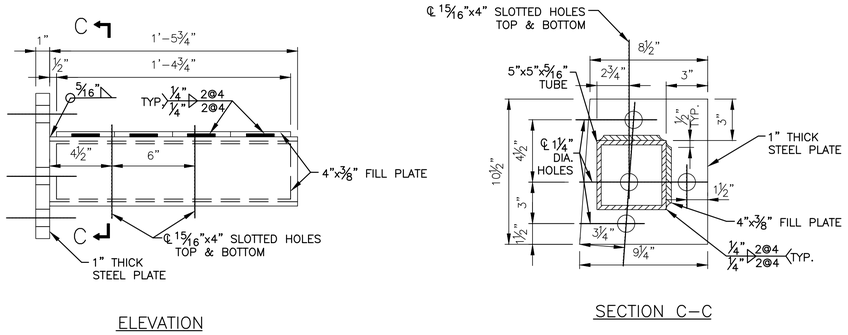

ELEVATION

SECTION C-C

OFF-END CONNECTION PIECE BOX BEAM GUIDE RAIL TO CONCRETE BARRIER

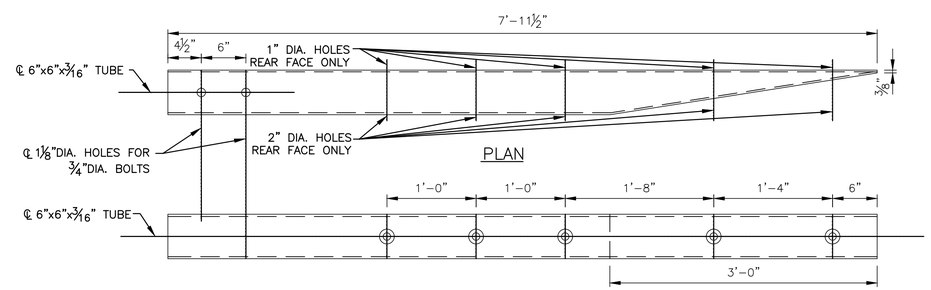

ELEVATION

DETAIL OF ON-END CONNECTION PIECE BOX BEAM GUIDE RAIL TO CONCRETE BARRIER

Sheet of

THE PORT AUTHORITY OF NY & NJ

CHIEF

No.	Date	Revision	Approved

ENGINEERING DEPARTMENT

PANYNJ Traffic Standard Details

TRAFFIC

Title

GUIDE RAIL DETAILS

BOX BEAM CONNECTIONS (ON-END & OFF-END) TO CONCRETE BARRIER AND ANCHOR BOLT DETAIL

This drawing subject to conditions in contract. All inventions, ideas, designs and methods herein are reserved to Port Authority and may not be used without its written consent.
All recipients of Contract documents, including bidders and those who do not bid and their prospective subcontractors and suppliers who may receive all or a part of the Contract documents or copies thereof, shall make every effort to ensure the secure and appropriate disposal of the Contract documents to prevent further disclosure of the information contained in the documents. Secure and appropriate disposal includes methods of document destruction such as shredding or arrangements with refuse handlers that ensure that third persons will not have access to the documents' contents either before, during, or after disposal. Documents may also be returned for disposal purposes to the Contract Desk on the 3rd Floor, 3 Gateway Center, Newark NJ 07102 or the office of the Director of Procurement, One Madison Avenue, 7th Floor, New York NY 10010.
It is a violation of law for any person to alter a document in any way, unless acting under the direction of a licensed professional engineer or registered architect. If this document bearing the seal of an engineer/architect is altered, the altering engineer/architect shall affix to the document their seal and the notation "altered by" followed by their signature and the date of such alteration, and a specific description of the alteration.

Designed by Drawn by Checked by

Date **03/14/2014**

Contract Number

Drawing Number **TD300.18**

PID#

NOTES:

1. WHERE GUIDE RAIL IS SET FLUSH TO THE CURB FACE, THE MOUNTING HEIGHT MUST BE MEASURED FROM THE TOP OF PAVEMENT.

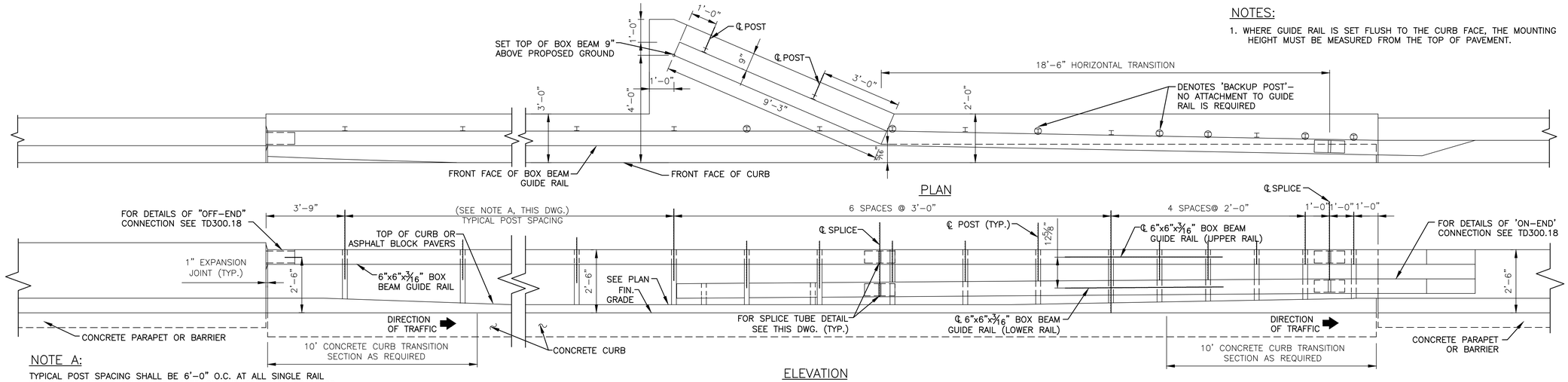

NOTE A:

TYPICAL POST SPACING SHALL BE 6'-0" O.C. AT ALL SINGLE RAIL LOCATIONS, UNLESS OTHERWISE NOTED ON THE CONTRACT DRAWINGS.

TYPICAL POST SPACING AND LAYOUT DETAILS BOX BEAM TRANSITION TO CONCRETE PARAPET OR BARRIER CONNECTIONS

N.T.S.

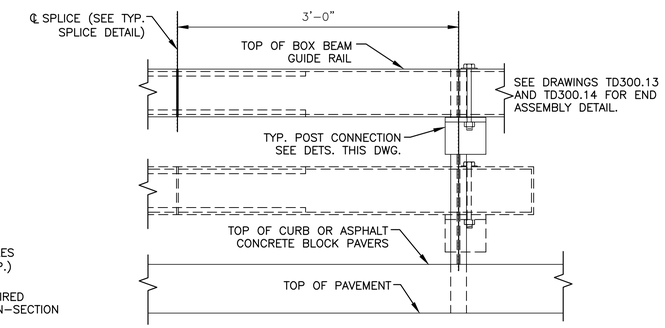

TYPICAL END TREATMENT DETAIL

N.T.S.

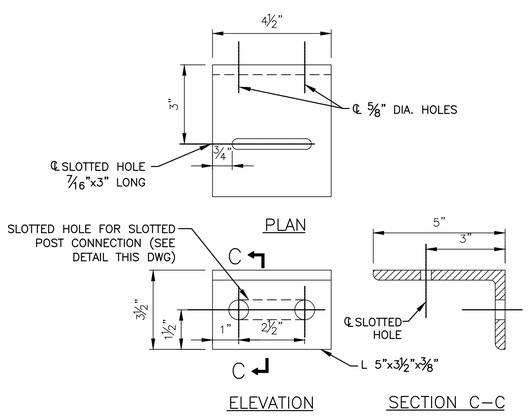

SHELF ANGLE DETAILS

N.T.S.

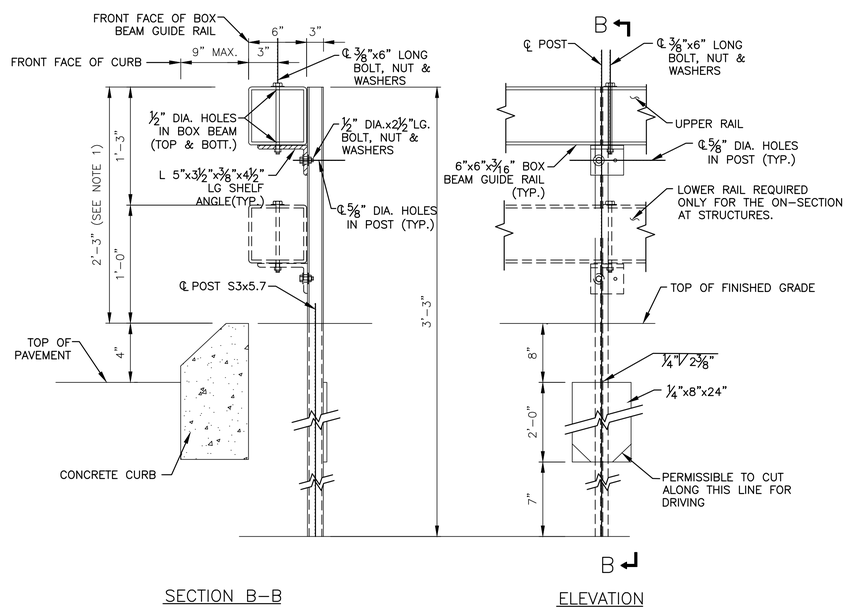

TYPICAL POST AND FOUNDATION DETAILS

N.T.S.

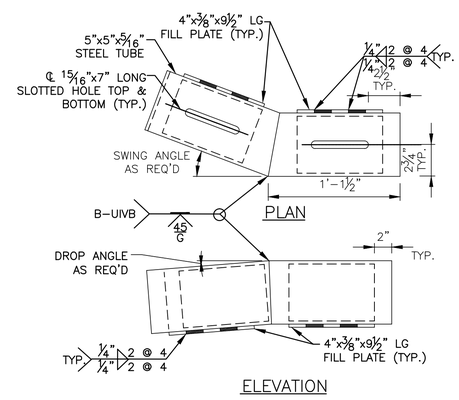

SPLICE TUBE DETAIL

N.T.S.

Sheet of

THE PORT AUTHORITY OF NY & NJ

CHIEF

No.	Date	Revision	Approved

ENGINEERING DEPARTMENT

PANYNJ Traffic Standard Details

TRAFFIC

Title

GUIDE RAIL DETAILS

BOX BEAM TRANSITION TO PARAPET OR BARRIER CONNECTION

This drawing subject to conditions in contract. All inventions, ideas, designs and methods herein are reserved to Port Authority and may not be used without its written consent.
All recipients of Contract documents, including bidders and those who do not bid and their prospective subcontractors and suppliers who may receive all or a part of the Contract documents or copies thereof, shall make every effort to ensure the secure and appropriate disposal of the Contract documents to prevent further disclosure of the information contained in the documents. Secure and appropriate disposal includes methods of document destruction such as shredding or arrangements with refuse handlers that ensure that third persons will not have access to the documents' contents either before, during, or after disposal. Documents may also be returned for disposal purposes to the Contract Desk on the 3rd Floor, 3 Gateway Center, Newark NJ 07102 or the office of the Director of Procurement, One Madison Avenue, 7th Floor, New York NY 10010.
It is a violation of law for any person to alter a document in any way, unless acting under the direction of a licensed professional engineer or registered architect. If this document bearing the seal of an engineer/architect is altered, the altering engineer/architect shall affix to the document their seal and the notation "altered by" followed by their signature and the date of such alteration, and a specific description of the alteration.

Designed by	Drawn by	Checked by

Date **03/14/2014**

Contract Number

Drawing Number **TD300.19**

PID#

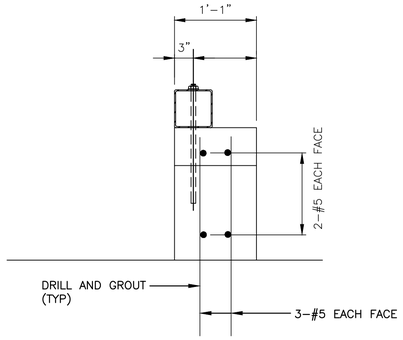

SECTION A-A
N.T.S.

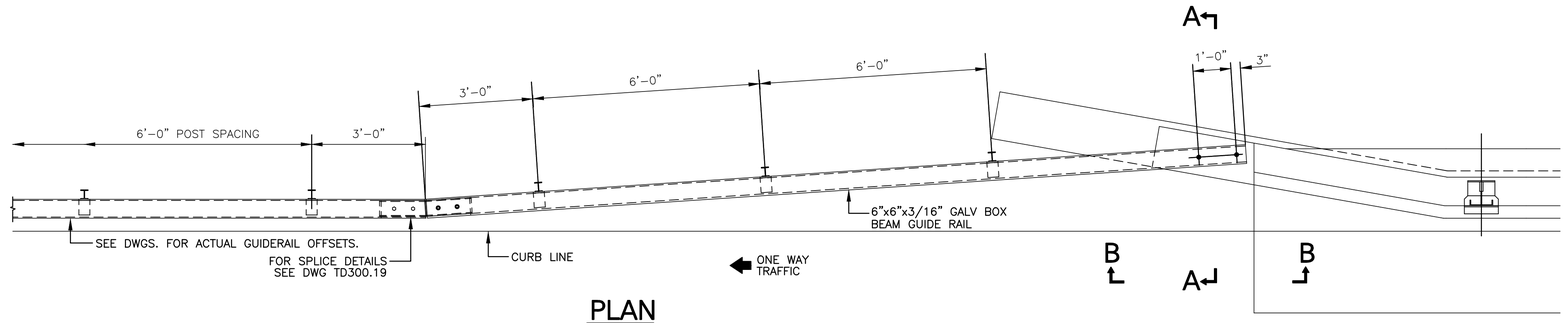

PLAN

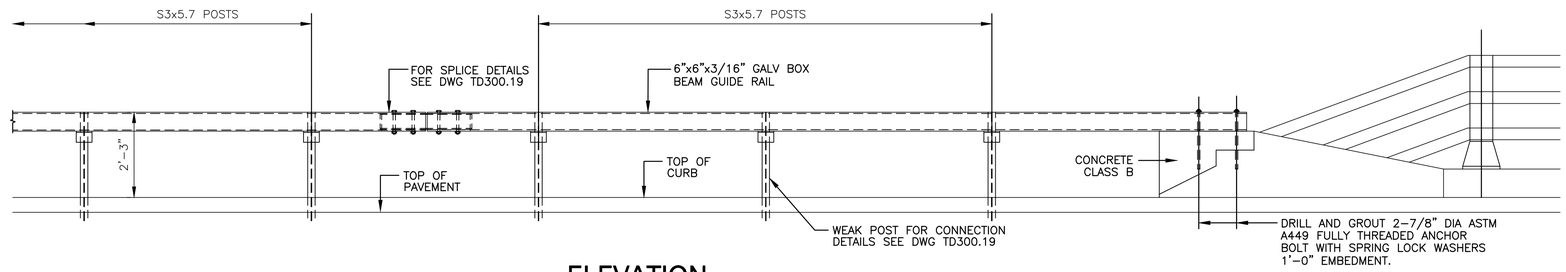

ELEVATION

BOX BEAM TRANSITION TO RAILING TRANSITION WALL
N.T.S.

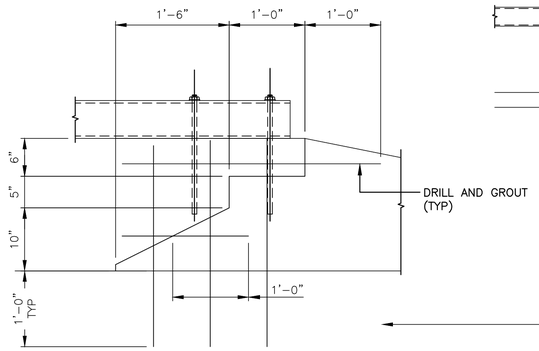

ELEVATION B-B
N.T.S.

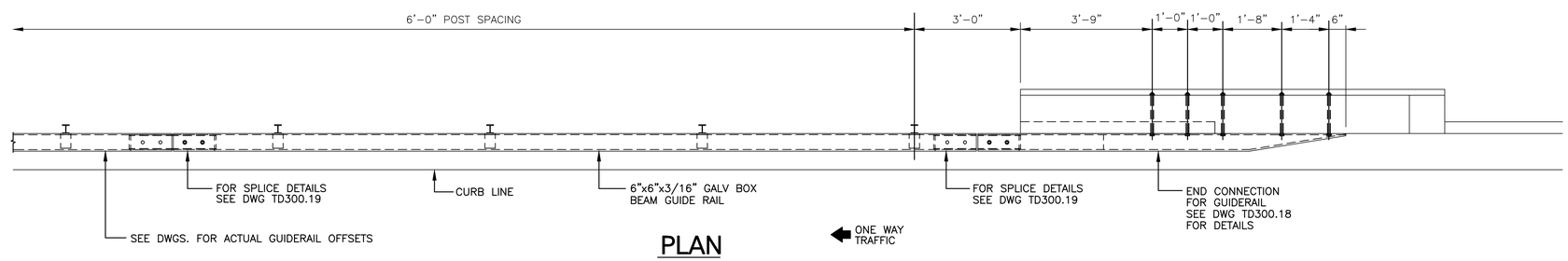

PLAN

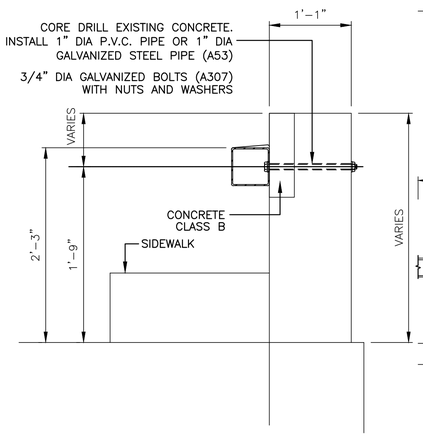

SECTION C-C
N.T.S.

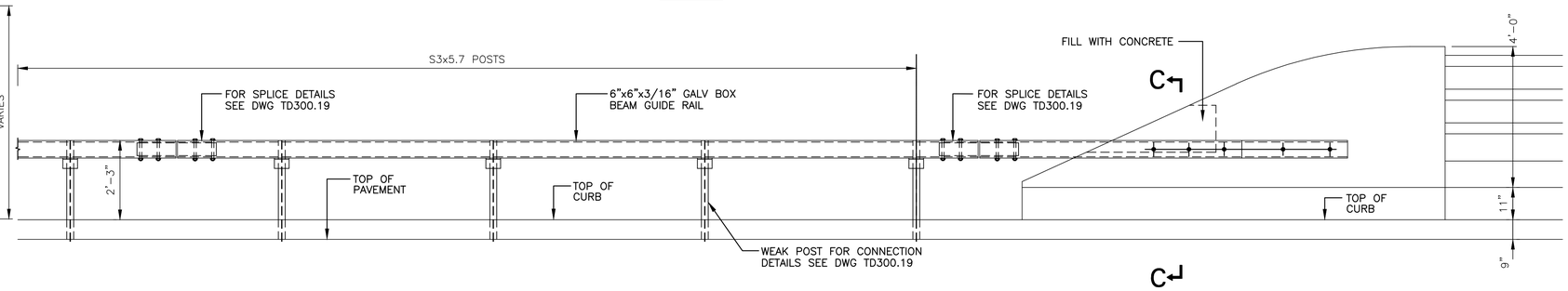

ELEVATION

BOX BEAM TRANSITION TO PYLON
N.T.S.

Sheet of

THE PORT AUTHORITY OF NY & NJ

CHIEF

No.	Date	Revision	Approved

ENGINEERING DEPARTMENT

PANYNJ Traffic Standard Details

TRAFFIC

Title
GUIDE RAIL DETAILS

BOX BEAM TRANSITION TO PYLON AND TO RAILING TRANSITION WALL

This drawing subject to conditions in contract. All inventions, ideas, designs and methods herein are reserved to Port Authority and may not be used without its written consent.
All recipients of Contract documents, including bidders and those who do not bid and their prospective subcontractors and suppliers who may receive all or a part of the Contract documents or copies thereof, shall make every effort to ensure the secure and appropriate disposal of the Contract documents to prevent further disclosure of the information contained in the documents. Secure and appropriate disposal includes methods of document destruction such as shredding or arrangements with refuse handlers that ensure that third persons will not have access to the documents' contents either before, during, or after disposal. Documents may also be returned for disposal purposes to the Contract Desk on the 3rd Floor, 3 Gateway Center, Newark NJ 07102 or the office of the Director of Procurement, One Madison Avenue, 7th Floor, New York NY 10010.
It is a violation of law for any person to alter a document in any way, unless acting under the direction of a licensed professional engineer or registered architect. If this document bearing the seal of an engineer/architect is altered, the altering engineer/architect shall affix to the document their seal and the notation "altered by" followed by their signature and the date of such alteration, and a specific description of the alteration.

Designed by | Drawn by | Checked by

Date **03/14/2014**

Contract Number

Drawing Number **TD300.20**

PID#

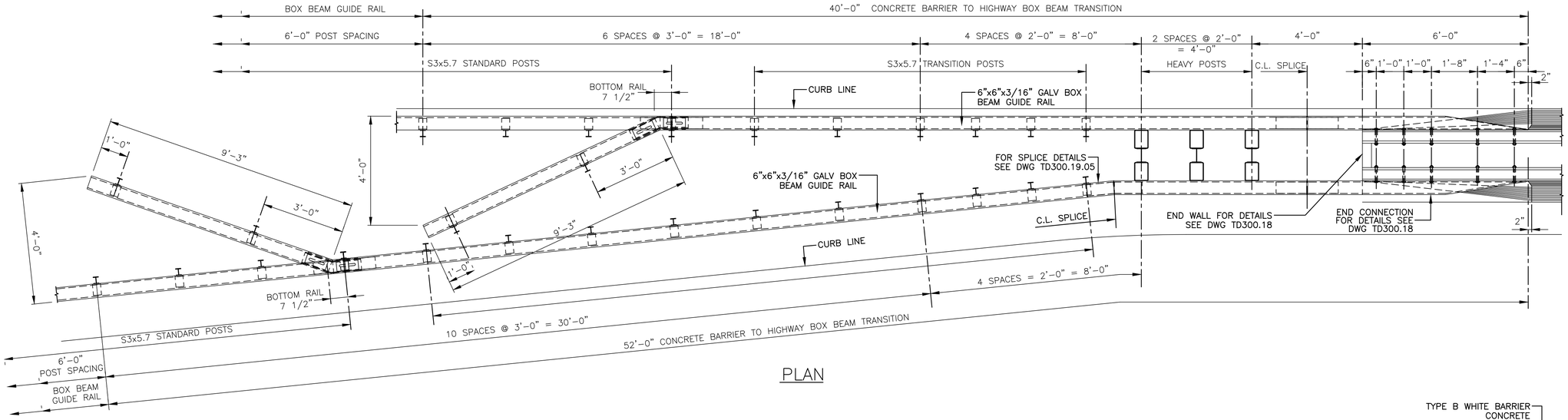

PLAN

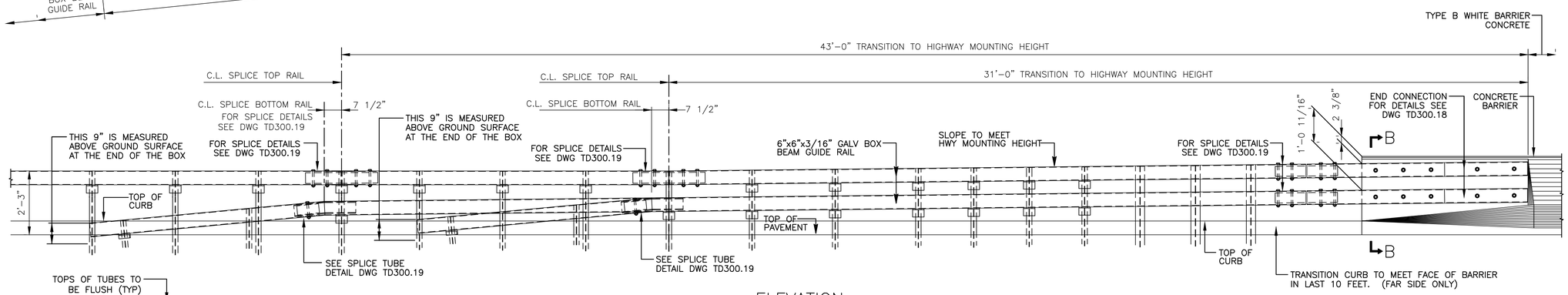

ELEVATION

BOX BEAM TRANSITION TO CONCRETE BARRIER

N.T.S.

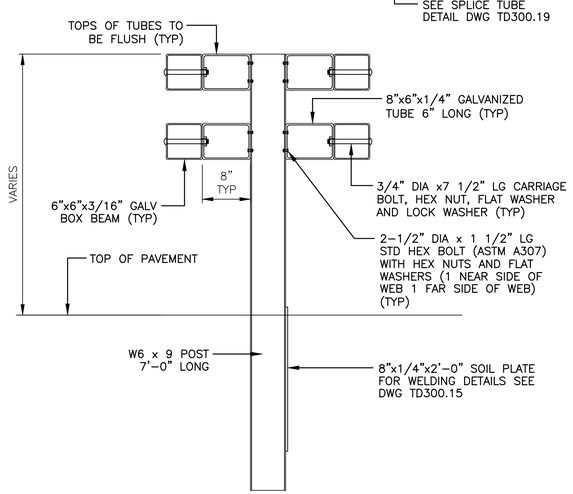

HEAVY POST DETAIL

N.T.S.

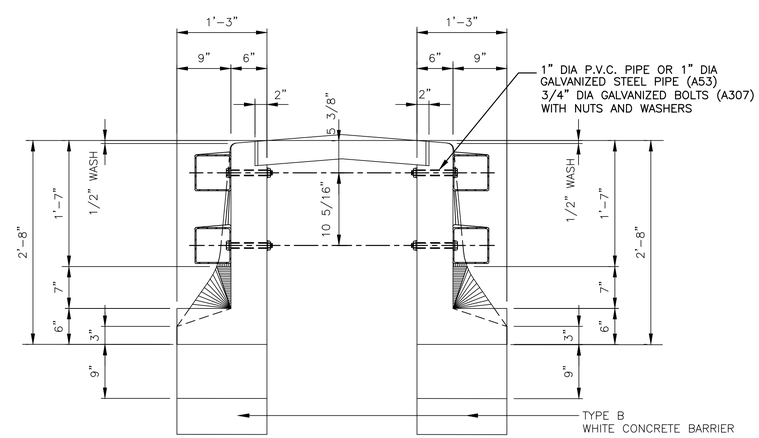

SECTION B-B

N.T.S.

Sheet of

THE PORT AUTHORITY OF NY & NJ

CHIEF

No.	Date	Revision	Approved

ENGINEERING DEPARTMENT

PANYNJ Traffic Standard Details

TRAFFIC

Title

GUIDE RAIL DETAILS

BOX BEAM TRANSITION TO VARIABLE WIDTH CONCRETE BARRIER

This drawing subject to conditions in contract. All inventions, ideas, designs and methods herein are reserved to Port Authority and may not be used without its written consent.
All recipients of Contract documents, including bidders and those who do not bid and their prospective subcontractors and suppliers who may receive all or a part of the Contract documents or copies thereof, shall make every effort to ensure the secure and appropriate disposal of the Contract documents to prevent further disclosure of the information contained in the documents. Secure and appropriate disposal includes methods of document destruction such as shredding or arrangements with refuse handlers that ensure that third persons will not have access to the documents' contents either before, during, or after disposal. Documents may also be returned for disposal purposes to the Contract Desk on the 3rd Floor, 3 Gateway Center, Newark NJ 07102 or the office of the Director of Procurement, One Madison Avenue, 7th Floor, New York NY 10010.
It is a violation of law for any person to alter a document in any way, unless acting under the direction of a licensed professional engineer or registered architect. If this document bearing the seal of an engineer/architect is altered, the altering engineer/architect shall affix to the document their seal and the notation "altered by" followed by their signature and the date of such alteration, and a specific description of the alteration.

Designed by	Drawn by	Checked by

Date **03/14/2014**

Contract Number

Drawing Number **TD300.21**

PID#

NOTE:

1. NUMBER OF POSTS, TYPE OF POST, POST SPACING, FLARE RATE AND MATERIALS SHALL BE IN ACCORDANCE WITH THE MANUFACTURER'S RECOMMENDATION AND THE DEPARTMENT'S QUALIFIED PRODUCTS LIST

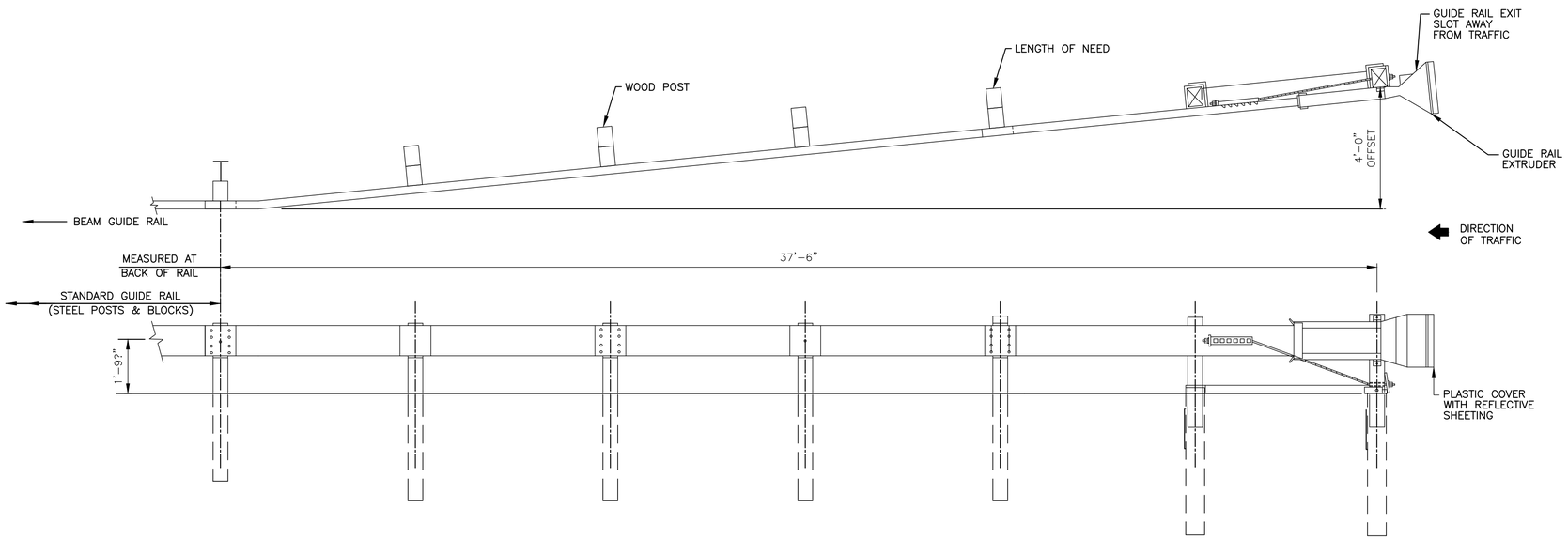

FLARE GUIDE RAIL TERMINAL

N.T.S.

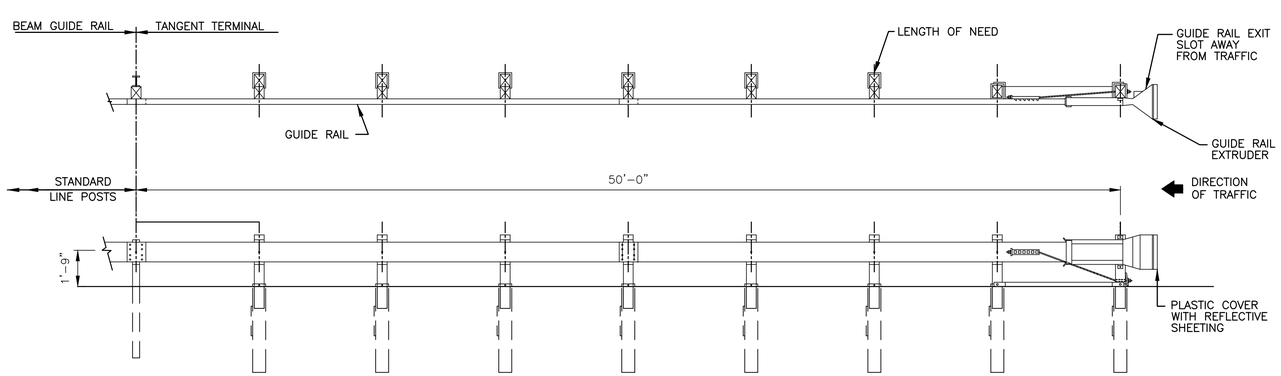

NOTE:

WOOD POSTS SHALL BE CONSTRUCTED USING FOUNDATION TUBES.

TANGENT GUIDE RAIL TERMINAL

N.T.S.

Sheet of

THE PORT AUTHORITY OF NY & NJ

CHIEF

No.	Date	Revision	Approved

ENGINEERING DEPARTMENT

PANYNJ Traffic Standard Details

TRAFFIC

Title

GUIDE RAIL DETAILS

FLARED GUIDE RAIL TERMINAL AND TANGENT TERMINAL

This drawing subject to conditions in contract. All inventions, ideas, designs and methods herein are reserved to Port Authority and may not be used without its written consent.
All recipients of Contract documents, including bidders and those who do not bid and their prospective subcontractors and suppliers who may receive all or a part of the Contract documents or copies thereof, shall make every effort to ensure the secure and appropriate disposal of the Contract documents to prevent further disclosure of the information contained in the documents. Secure and appropriate disposal includes methods of document destruction such as shredding or arrangements with refuse handlers that ensure that third persons will not have access to the documents' contents either before, during, or after disposal. Documents may also be returned for disposal purposes to the Contract Desk on the 3rd Floor, 3 Gateway Center, Newark NJ 07102 or the office of the Director of Procurement, One Madison Avenue, 7th Floor, New York NY 10010.
It is a violation of law for any person to alter a document in any way, unless acting under the direction of a licensed professional engineer or registered architect. If this document bearing the seal of an engineer/architect is altered, the altering engineer/architect shall affix to the document their seal and the notation "altered by" followed by their signature and the date of such alteration, and a specific description of the alteration.

Designed by Drawn by Checked by

Date **03/14/2014**

Contract Number

Drawing Number **TD300.22**

PID#

Y = OFFSET FROM GUTTER LINE	X	X + 10' (DES.)
* 1'–0"	24'–0"	34'–0"
4'–0"	42'–0"	52'–0"
7'–0"	60'–0"	70'–0"
10'–0"	78'–0"	88'–0"

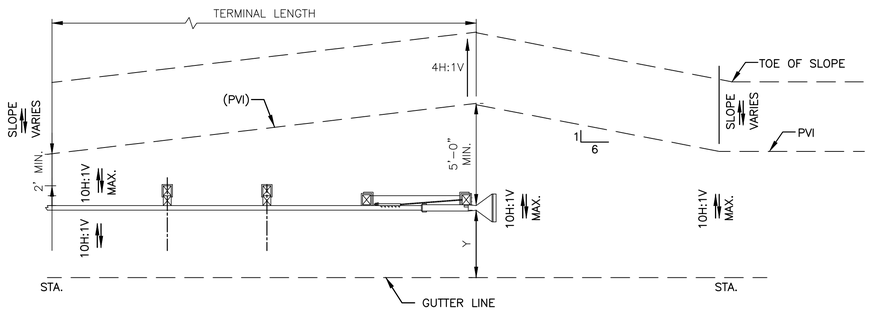

STANDARD GRADING

NOTES:

1. WHERE GUIDE RAIL IS INSTALLED FLUSH WITH THE GUTTER LINE, THE TANGENT TERMINAL SHALL BE CONSTRUCTED WITH A 50:1 STRAIGHT FLARE FOR ITS ENTIRE LENGTH SO THAT THE EXTRUDER HEAD DOES NOT PROTRUDE INTO THE ROADWAY.

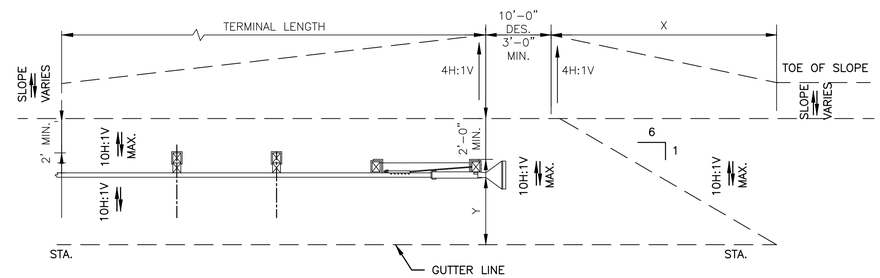

ALTERNATE GRADING

GRADING TREATMENT AT FLARED AND TANGENT TERMINALS

N.T.S.

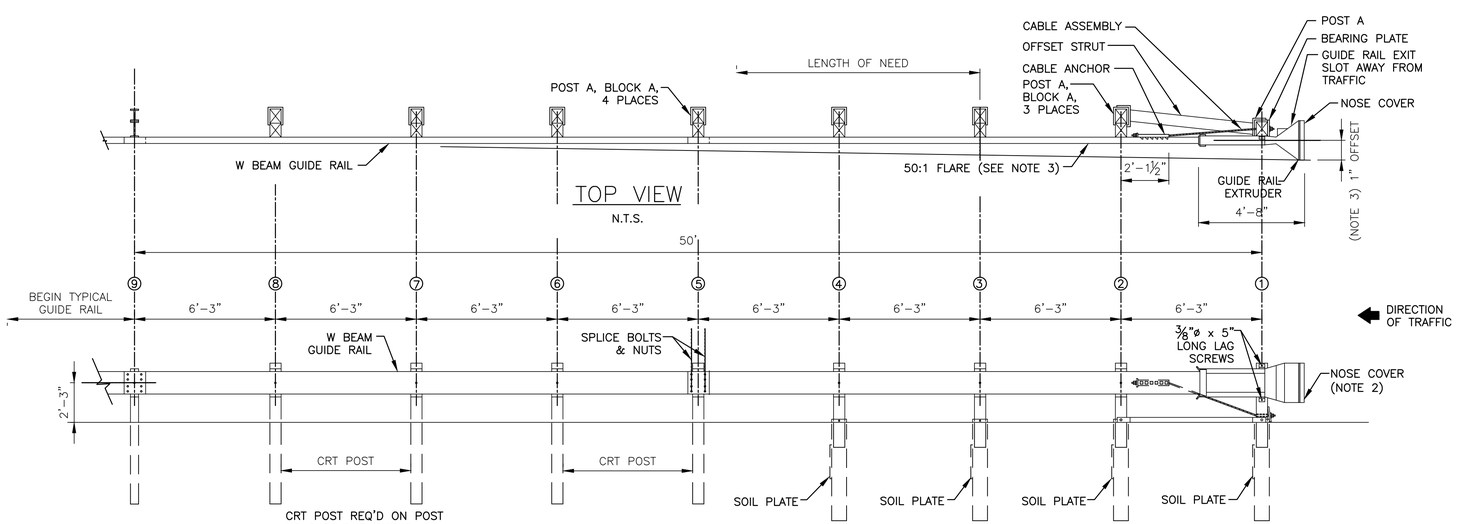

TOP VIEW

N.T.S.

ELEVATION

N.T.S.

NOTES:

1. DIRECTION OF TAPE SHALL CONFORM TO MUTCD APPLICATION FOR DIAGONAL STRIPES ON OBJECT MARKERS AND BRIDGE PANELS. COLOR OF TAPE SHALL BE AMBER (YELLOW).
2. ALTERNATE BREAKAWAY CABLE TERMINAL IS TO BE ET–2000 (AS SHOWN), OR CAT AS MANUFACTURED BY SYRO STEEL COMPANY, BRAKEMASTER AS MANUFACTURED BY ENERGY ABSORPTION SYSTEMS, INC., THE BEST SYSTEM AS MANUFACTURED BY INTERSTATE STEEL CORPORATION, THE SKT–350 AS MANUFACTURED BY ROAD SYSTEMS INC., OR APPROVED EQUAL MEETING NCHRP 350 TESTING CRITERIA. ALL REMINALS SHALL BE INSTALLED ACCORDING TO THE MANUFACTURER'S INSTALLATION INSTRUCTIONS.
3. ALL STANDARD TERMINALS WILL BE INSTALLED WITH AN OFFSET TO PREVENT THE GUARDRAIL EXTRUDER FROM ENCROACHING ON THE SHOULDER. PLEASE REFER TO THE MANUFACTURER'S INSTALLATION INSTRUCTIONS FOR SPECIFIC INFORMATION ON THEIR TERMINAL SYSTEM'S RECOMMENDED OFFSETS AND STRAIGHT LINE FLARE RATES.
4. FOR DETAILS, DIMENSIONS, QUANTITIES, AND OTHER INFORMATION NOT SHOWN HEREON, SEE INDIVIDUAL MANUFACTURER'S CONTRACT DRAWINGS.
5. CRT POST REQUIRED ON POST NUMBERS 5, 6, 7, AND 8.

Sheet of

THE PORT AUTHORITY OF NY & NJ

CHIEF

No.	Date	Revision	Approved

ENGINEERING DEPARTMENT

PANYNJ Traffic Standard Details

TRAFFIC

Title

GUIDE RAIL DETAILS

PARALLEL TYPE GATING END TERMINALS (ET-PLUS)

This drawing subject to conditions in contract. All inventions, ideas, designs and methods herein are reserved to Port Authority and may not be used without its written consent.
All recipients of Contract documents, including bidders and those who do not bid and their prospective subcontractors and suppliers who may receive all or a part of the Contract documents or copies thereof, shall make every effort to ensure the secure and appropriate disposal of the Contract documents to prevent further disclosure of the information contained in the documents. Secure and appropriate disposal includes methods of document destruction such as shredding or arrangements with refuse handlers that ensure that third persons will not have access to the documents' contents either before, during, or after disposal. Documents may also be returned for disposal purposes to the Contract Desk on the 3rd Floor, 3 Gateway Center, Newark NJ 07102 or the office of the Director of Procurement, One Madison Avenue, 7th Floor, New York NY 10010.
It is a violation of law for any person to alter a document in any way, unless acting under the direction of a licensed professional engineer or registered architect. If this document bearing the seal of an engineer/architect is altered, the altering engineer/architect shall affix to the document their seal and the notation "altered by" followed by their signature and the date of such alteration, and a specific description of the alteration.

Designed by Drawn by Checked by

Date **03/14/2014**

Contract Number

Drawing Number **TD300.23**

PID#

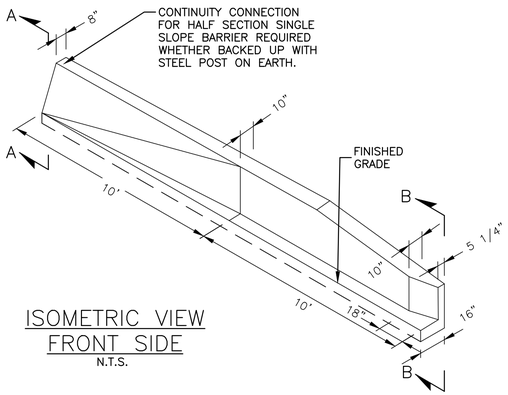

ISOMETRIC VIEW
FRONT SIDE
N.T.S.

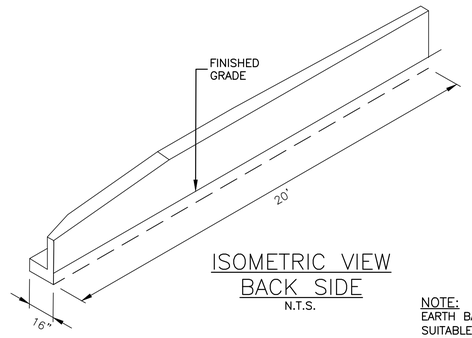

ISOMETRIC VIEW
BACK SIDE
N.T.S.

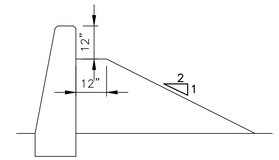

SINGLE SLOPE
CONCRETE HALF SECTION
TRANSITION BARRIER
WITH EARTH BACKUP
N.T.S.

NOTE:
EARTH BACKUP SHALL CONSIST OF FULLY COMPACTED SUITABLE MATERIAL HAVING NO PARTICLES GREATER THAN 1½". EARTH BACKUP, IF USED, SHALL EXTEND FULL HEIGHT FROM THE POINT WHERE SECTION A–A IS DRAWN TO A POINT 6'–7" FROM WHERE SECTION B–B IS DRAWN.

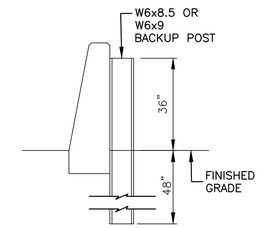

SINGLE SLOPE CONCRETE
HALF–SECTION TRANSITION
BARRIER WITH BACKUP POST
(SEE NOTES)
N.T.S.

NOTES:

1. VERTICAL AND SLOPING CONCRETE SURFACE SHALL BE SMOOTH.
2. UNLESS INDICATED OTHERWISE, MATERIALS AND CONSTRUCTION DETAILS SHOULD CONFORM AND/OR BE PERFORMED IN ACCORDANCE WITH CURRENT PORT AUTHORITY, NYSDOT AND/OR NJDOT SPECIFICATION FOR SUCH ITEM. PRIOR APPROVAL WITH THE PORT AUTHORITY ENGINEER IS REQUIRED.
3. THE BEND MAY BE ELIMINATED PROVIDED 2" MINIMUM COVER IS MAINTAINED.
4. CONTINUITY CONNECTION SHALL BE GALVANIZED UNLESS THE UNIT IS A RUSTIC VERSION.
5. IF THE 6SM4 BAR IS USED, THEN THIS 4SM4 BAR NEED NOT BE USED.
6. CONCRETE TRANSITION PIECE SHALL BE BACKED UP WITH EARTH OR BACK–UP POSTS FOR ITS ENTIRE LENGTH.

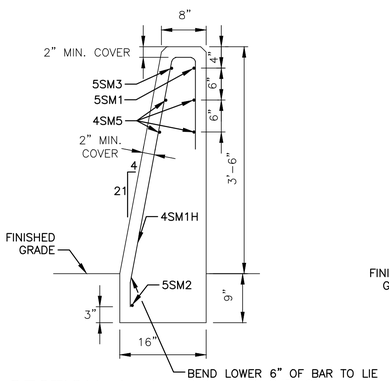

SECTION A–A
N.T.S.

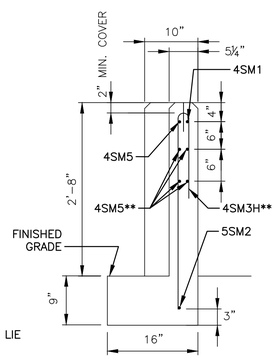

SECTION B–B
N.T.S.

BAR LIST

ALL BARS ARE TO BE EPOXY COATED

MARK	SIZE	NO.	LENGTH	USE	A	B	C	D	H	K	LOCATION
4SM1H	4	4	5'–9"	STIRRUP	10"	46"	1½"	4¼"	—	6"	AT CONCRETE BARRIER END
4SM2H	4	1	5'–9"	STIRRUP	4 1/2"	46"	1½"	5½"	—	—	AT 33" FROM THE MIDPOINT OF THE BARRIER UNIT
4SM3H	4	2	VARIES FROM 4'–8" TO 4"–10"	STIRRUP	VARIES FROM 3⅛" 4½"	VARIES FROM 3' TO 3' 1¾"	1½"	———	—	—	AT CORRUGATED RAIL END
4SM4	4	2	5'–3"	STIRRUP	6"	28"	3"	7"	—	—	2 AT EXPANSION JOINT SIDE
4SM5	4	8	2'–6"	STRAIGHT	—	———	—	———	—	—	4 AT EACH END
4SM6H	4	1	5'–9"	STIRRUP	6"	46"	1½"	———	—	—	AT 33" FROM THE MIDPOINT OF THE BARRIER UNIT
4SM7H	4	2	VARIES FROM 5' TO 5'–1"	STIRRUP	6"	VARIES FROM 3'–3" 3'–3½"	1½"	———	—	—	AT CORRUGATED RAIL END
5SM1	5	1	19'–10"	STRINGER	—	13'–4"	—	———	9 ⅝"	6'–4"	LONGITUDINAL 1 IN TOP
5SM2	5	1	19'–10"	STRINGER	—	16'–3"	—	———	10"	3'–5"	LONGITUDINAL 1 IN BOTTOM
5SM3	5	1	13'–1"	STRINGER	—	9'–10"	—	———	½"	3'–3"	LONGITUDINAL 1 IN TOP
5SM5	5	1	5'–1"	STRINGER	—	3'–8"	—	———	4⅛"	17"	LONGITUDINAL 1 IN TOP
5SM6	5	1	5'–9"	STRINGER	—	2'–2"	—	———	6"	3'–5"	LONGITUDINAL 1 IN TOP
6SM4	6	2	5–4"	STIRRUP	6"	28"	3"	7"	—	—	SEE DETAIL OF SM4 BAR

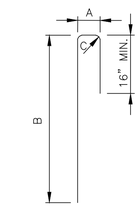

4SM3H, 4SM6H
AND 4SM7H
N.T.S.

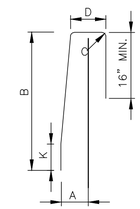

4SM1H
AND
4SM2H
N.T.S.

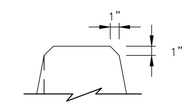

TYPICAL CHAMFER
DETAIL
N.T.S.

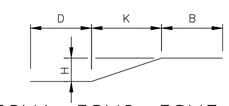

5SM1, 5SM2, 5SM3,
5SM5 & 5SM6
N.T.S.

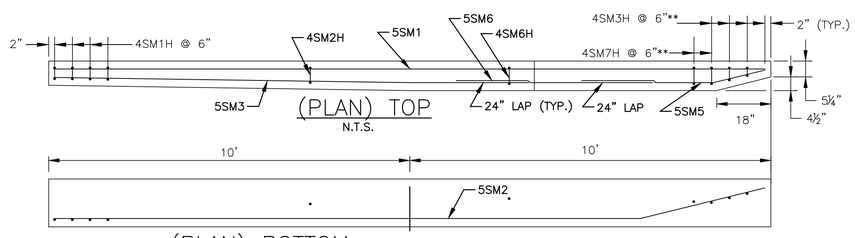

(PLAN) TOP
N.T.S.

(PLAN) BOTTOM
N.T.S.

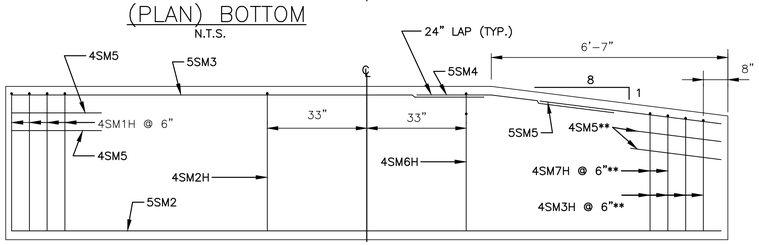

** LOCATE 4SM5, 4SM3H & 4SM7H BARS TO AVOID THE 1"ø PVC OR GALVANIZED STEEL PIPE.

ELEVATION
N.T.S.

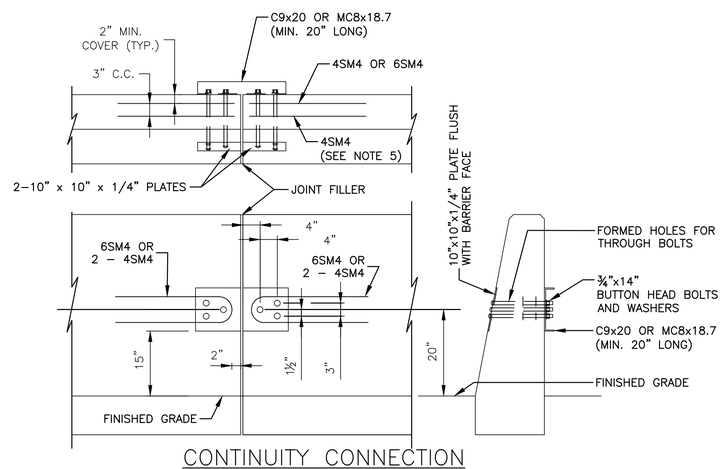

CONTINUITY CONNECTION
FOR HALF SECTION SINGLE SLOPE BARRIER
N.T.S. (SEE NOTE 4)

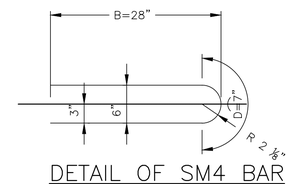

DETAIL OF SM4 BAR
N.T.S.

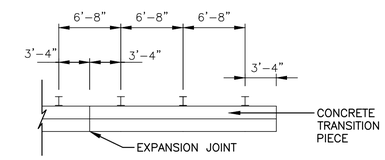

TYPICAL BACKUP POST LAYOUT
N.T.S.

Sheet of

THE PORT AUTHORITY
OF NY & NJ

CHIEF

No.	Date	Revision	Approved

ENGINEERING DEPARTMENT

PANYNJ
Traffic Standard Details

TRAFFIC

Title
GUIDE RAIL DETAILS

TRANSITION BETWEEN W-BEAM GUIDE RAIL AND HALF SECTION CONCRETE BARRIER (1 OF 2)

This drawing subject to conditions in contract. All inventions, ideas, designs and methods herein are reserved to Port Authority and may not be used without its written consent.
All recipients of Contract documents, including bidders and those who do not bid and their prospective subcontractors and suppliers who may receive all or a part of the Contract documents or copies thereof, shall make every effort to ensure the secure and appropriate disposal of the Contract documents to prevent further disclosure of the information contained in the documents. Secure and appropriate disposal includes methods of document destruction such as shredding or arrangements with refuse handlers that ensure that third persons will not have access to the documents' contents either before, during, or after disposal. Documents may also be returned for disposal purposes to the Contract Desk on the 3rd Floor, 3 Gateway Center, Newark NJ 07102 or the office of the Director of Procurement, One Madison Avenue, 7th Floor, New York NY 10010.
It is a violation of law for any person to alter a document in any way, unless acting under the direction of a licensed professional engineer or registered architect. If this document bearing the seal of an engineer/architect is altered, the altering engineer/architect shall affix to the document their seal and the notation "altered by" followed by their signature and the date of such alteration, and a specific description of the alteration.

Designed by Drawn by Checked by

Date **03/14/2014**

Contract Number

Drawing Number **TD300.24**

PID#

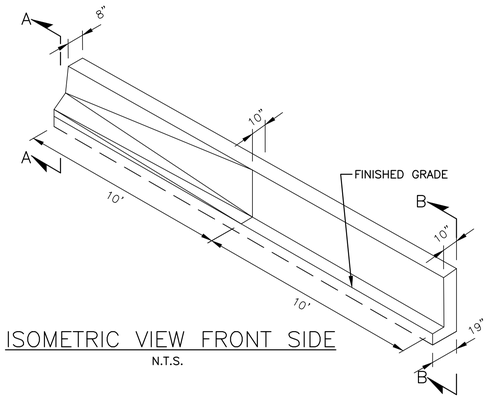

ISOMETRIC VIEW FRONT SIDE
N.T.S.

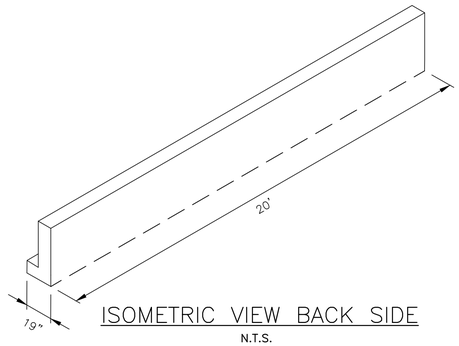

ISOMETRIC VIEW BACK SIDE
N.T.S.

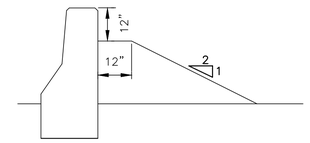

CONCRETE HALF SECTION TRANSITION BARRIER WITH EARTH BACKUP
(SEE NOTES)

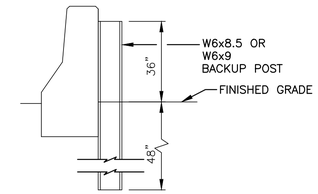

CONCRETE HALF SECTION TRANSITION BARRIER WITH BACKUP POST
(SEE NOTES)
N.T.S.

NOTES:

1. SURFACE SHALL BE SMOOTH.
2. UNLESS INDICATED OTHERWISE, MATERIALS AND CONSTRUCTION DETAILS SHOULD CONFORM AND/OR BE PERFORMED IN ACCORDANCE WITH CURRENT PORT AUTHORITY, NYSDOT AND/OR NJDOT SPECIFICATION FOR SUCH ITEM. PRIOR APPROVAL WITH THE PORT AUTHORITY ENGINEER IS REQUIRED.
3. A CONTINUITY CONNECTION SHALL BE USED AT THE BARRIER JOINT WHEN THE BARRIER IS BACKED UP WITH STEEL POSTS.
4. PRECAST AND CAST–IN–PLACE CONCRETE HALF SECTION JERSEY BARRIER SHALL BE BACKED UP WITH EARTH OR BACK UP POSTS FOR ITS ENTIRE LENGTH AS SHOWN ON THE BACKUP POST LAYOUT.
5. IF THE 6SM4 BAR IS USED, THEN THIS 13SM4 BAR NEED NOT BE USED.
6. FOR RAILING LAYOUT AND DETAILS SEE DRAWING TD300.08.

NOTE:

EARTH BACKUP SHALL CONSIST OF FULLY COMPACTED SUITABLE MATERIAL HAVING NO PARTICLES GREATER THAN 1½".

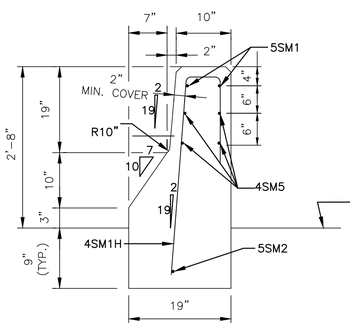

SECTION A–A
N.T.S.

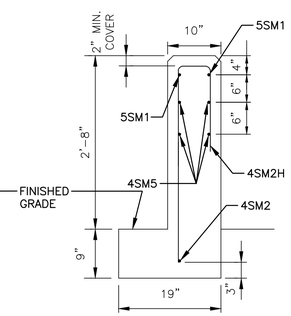

SECTION B–B
N.T.S.

BAR LIST **											
MARK	SIZE	NO.	LENGTH	USE	A	B	C	D	H	K	LOCATION
4SM1H	4	4	4'–10"	STIRRUP	6⅝"	36"	1½"	6"	—	—	AT CONCRETE BARRIER END
4SM2H	4	6	4'–10"	STIRRUP	6"	36"	1½"	———	—	—	AT CORRUGATED RAIL END AND AT 33" FROM MIDPOINT
4SM4	4	2	5'–3"	STIRRUP	6"	28"	3"	7"	—	—	2 AT EXPANSION JOINT SIDE
4SM5	4	8	30"	STRAIGHT	—	———	—	———	—	—	4 AT EACH END
5SM1	5	1	19'–8"	STRINGER	—	———	—	———	—	—	LONGITUDINAL 1 IN TOP
5SM2	5	1	19'–10"	STRINGER	—	1'–7"	—	17'–7"	4"	7"	LONGITUDINAL 1 IN BOTTOM
6SM4	6	2	5'–3"	STIRRUP	*	*	*	*	—	—	SEE DETAIL OF SM4 BAR

* SEE DETAIL OF 4SM4 BAR
** BARS ARE TO BE EPOXY COATED

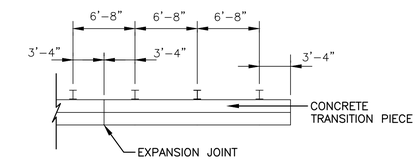

TYPICAL BACKUP POST LAYOUT
N.T.S.

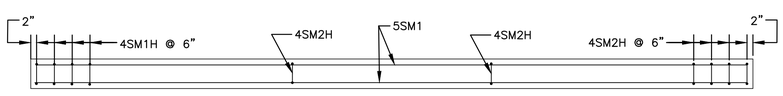

(PLAN) TOP
N.T.S.

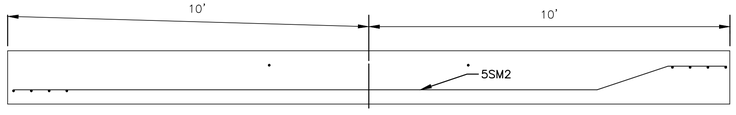

(PLAN) BOTTOM
N.T.S.

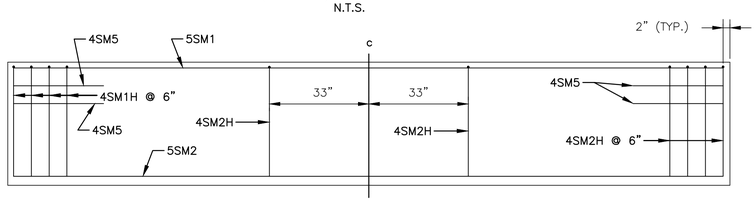

ELEVATION
N.T.S.

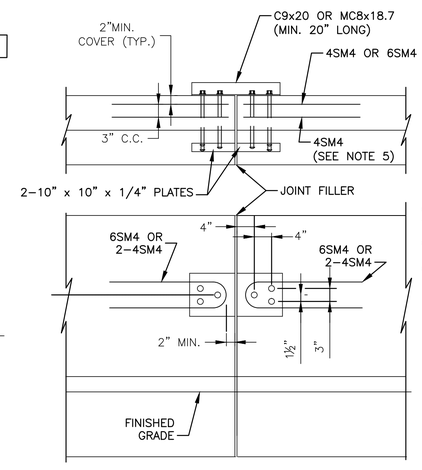

CONTINUITY CONNECTION FOR HALF SECTION CONCRETE BARRIER
(SEE NOTE 4)
N.T.S.

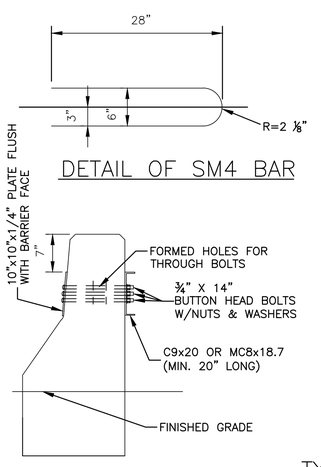

DETAIL OF SM4 BAR

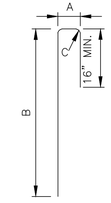

4SM2H
N.T.S.

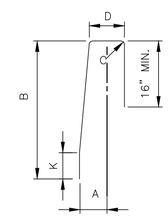

4SM1H
N.T.S.

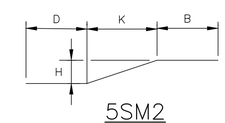

5SM2
N.T.S.

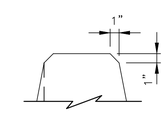

TYPICAL CHAMFER DETAIL
N.T.S.

Sheet of

THE PORT AUTHORITY OF NY & NJ

CHIEF

No.	Date	Revision	Approved

ENGINEERING DEPARTMENT

PANYNJ
Traffic Standard Details

TRAFFIC

Title
GUIDE RAIL DETAILS

TRANSITION BETWEEN W-BEAM GUIDE RAIL AND HALF SECTION CONCRETE BARRIER (2 OF 2)

This drawing subject to conditions in contract. All inventions, ideas, designs and methods herein are reserved to Port Authority and may not be used without its written consent.
All recipients of Contract documents, including bidders and those who do not bid and their prospective subcontractors and suppliers who may receive all or a part of the Contract documents or copies thereof, shall make every effort to ensure the secure and appropriate disposal of the Contract documents to prevent further disclosure of the information contained in the documents. Secure and appropriate disposal includes methods of document destruction such as shredding or arrangements with refuse handlers that ensure that third persons will not have access to the documents' contents either before, during, or after disposal. Documents may also be returned for disposal purposes to the Contract Desk on the 3rd Floor, 3 Gateway Center, Newark NJ 07102 or the office of the Director of Procurement, One Madison Avenue, 7th Floor, New York NY 10010.
It is a violation of law for any person to alter a document in any way, unless acting under the direction of a licensed professional engineer or registered architect. If this document bearing the seal of an engineer/architect is altered, the altering engineer/architect shall affix to the document their seal and the notation "altered by" followed by their signature and the date of such alteration, and a specific description of the alteration.

Designed by Drawn by Checked by

Date 03/14/2014

Contract Number

Drawing Number TD300.25

PID#

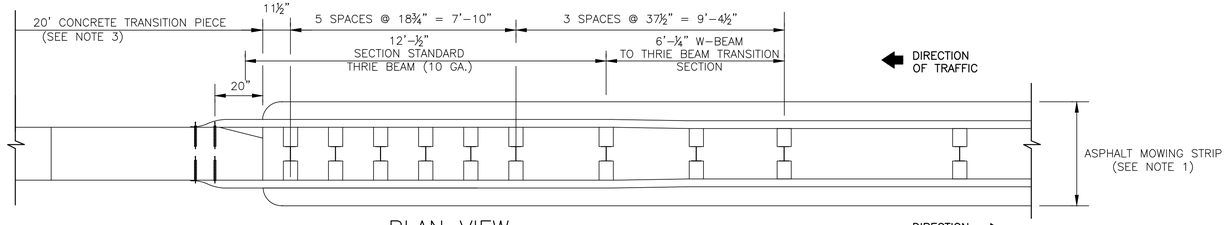

PLAN VIEW

N.T.S.

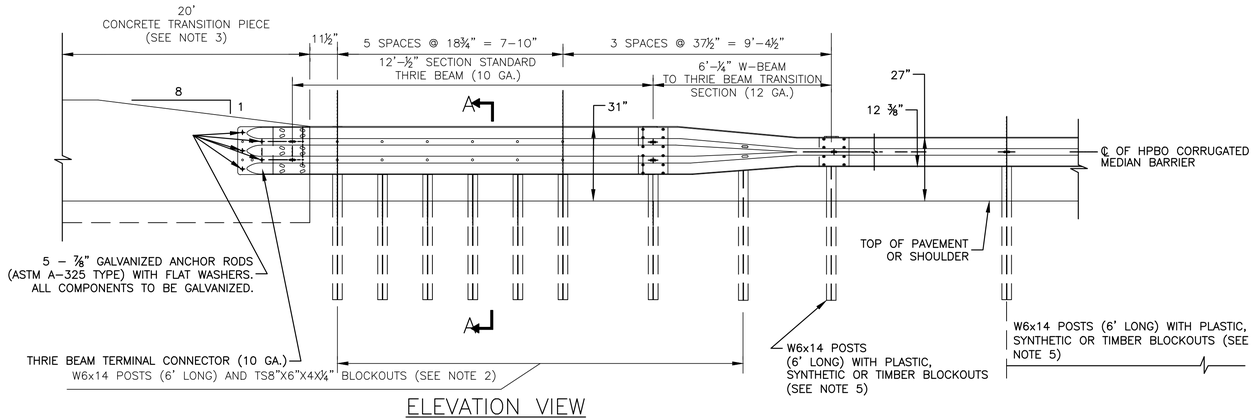

ELEVATION VIEW

N.T.S.

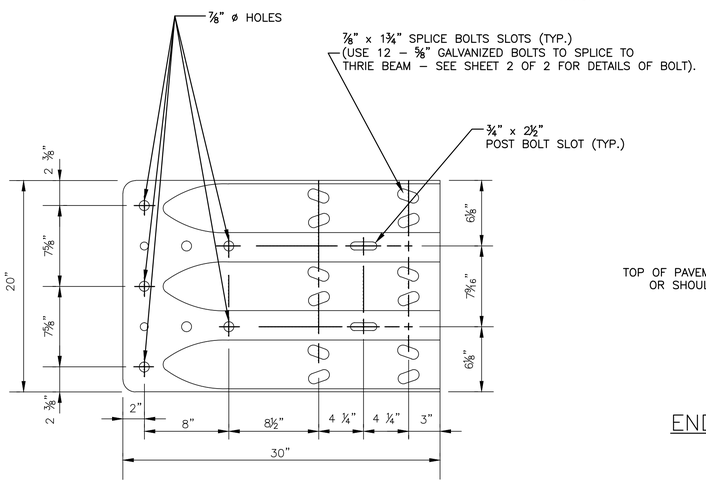

THRIE BEAM TERMINAL CONNECTOR

N.T.S.

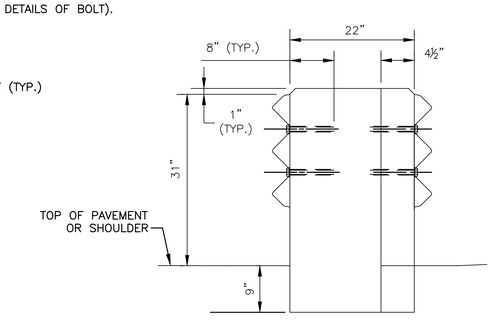

END VIEW (CONCRETE TRANSITION PIECE)

N.T.S.

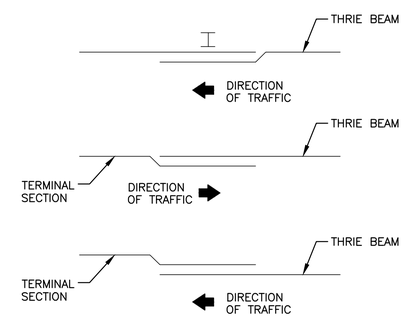

TYPICAL SPLICE LAYOUTS

N.T.S.

NOTES:

1. THE MOWING STRIP, WHEN SPECIFIED, SHOULD BE A MINIMUM OF 3" THICK. THE MATERIAL AND THICKNESS OF EACH LIFT SHOULD MATCH THAT IN THE ADJOINING STABILIZED SHOULDER. SEE DRAWING TD300.41 FOR DETAILS.
2. FOR ADDITIONAL DETAILS SEE TRANSITION BETWEEN HEAVY POST BLOCKED OUT CORRUGATED MEDIAN BARRIER AND CONCRETE MEDIAN BARRIER STANDARD SHEET TD300.27 (SHEET 2 OF 2).
3. THE THRIE BEAM TRANSITIONS TO CONCRETE MEDIAN BARRIER OR SINGLE SLOPE MEDIAN BARRIER. SEE EITHER THE TRANSITION BETWEEN HPBO CORRUGATED MEDIAN BARRIER AND SINGLE SLOPE CONCRETE MEDIAN BARRIER STANDARD SHEET OR TRANSITION BETWEEN HPBO CORRUGATED MEDIAN BARRIER AND CONCRETE MEDIAN BARRIER STANDARD SHEET.
4. FOR W-BEAM DETAILS SEE DRAWING TD300.02.
5. ALL STEEL THAT IS SPECIFIED TO BE GALVANIZED SHALL BE GALVANIZED IN ACCORDANCE WITH SPECIFICATIONS. ALL AREAS WHERE THE ZINC COATING IS DAMAGED DURING INSTALLATION INCLUDING FIELD DRILLING HOLES, SHALL BE REPAIRED.
6. FOR DETAILS AND SECTION A-A, SEE DRAWING TD300.27 (SHEET 2 OF 2).

Sheet of

THE PORT AUTHORITY
OF NY & NJ

CHIEF

No.	Date	Revision	Approved

ENGINEERING DEPARTMENT

PANYNJ
Traffic Standard Details

TRAFFIC

Title

GUIDE RAIL DETAILS

TRANSITION BETWEEN DUAL FACED W-BEAM GUIDE RAIL & CONCRETE MEDIAN BARRIER (SHEET 1 OF 2)

This drawing subject to conditions in contract. All inventions, ideas, designs and methods herein are reserved to Port Authority and may not be used without its written consent.
All recipients of Contract documents, including bidders and those who do not bid and their prospective subcontractors and suppliers who may receive all or a part of the Contract documents or copies thereof, shall make every effort to ensure the secure and appropriate disposal of the Contract documents to prevent further disclosure of the information contained in the documents. Secure and appropriate disposal includes methods of document destruction such as shredding or arrangements with refuse handlers that ensure that third persons will not have access to the documents' contents either before, during, or after disposal. Documents may also be returned for disposal purposes to the Contract Desk on the 3rd Floor, 3 Gateway Center, Newark NJ 07102 or the office of the Director of Procurement, One Madison Avenue, 7th Floor, New York NY 10010.
It is a violation of law for any person to alter a document in any way, unless acting under the direction of a licensed professional engineer or registered architect. If this document bearing the seal of an engineer/architect is altered, the altering engineer/architect shall affix to the document their seal and the notation "altered by" followed by their signature and the date of such alteration, and a specific description of the alteration.

Designed by Drawn by Checked by

Date **03/14/2014**

Contract Number

Drawing Number **TD300.26**

PID#

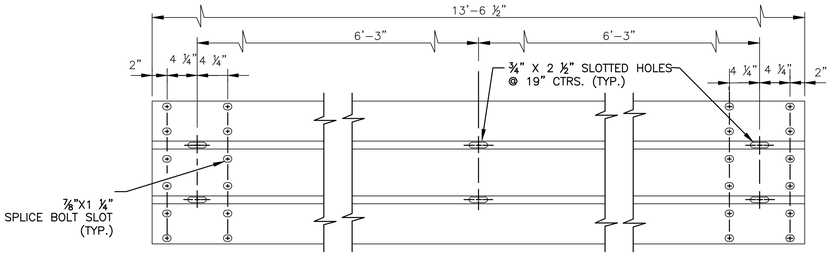

TYPICAL THRIE BEAM SECTION
N.T.S.

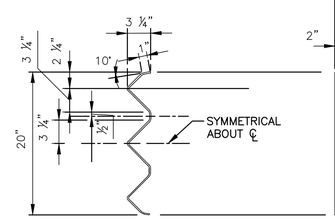

END VIEW OF TRANSITION
N.T.S.

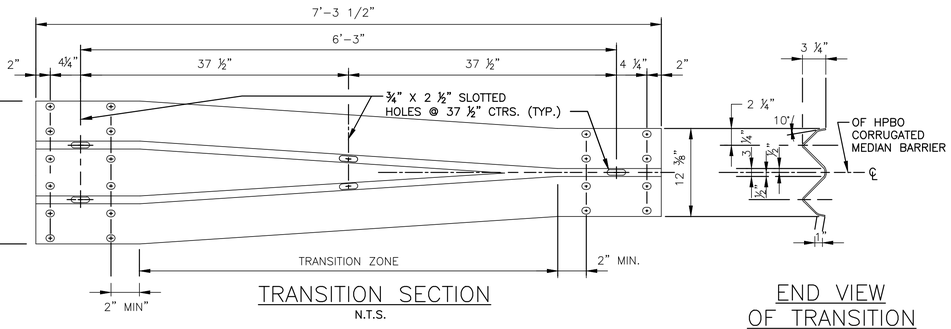

TRANSITION SECTION
N.T.S.

END VIEW OF TRANSITION
N.T.S.

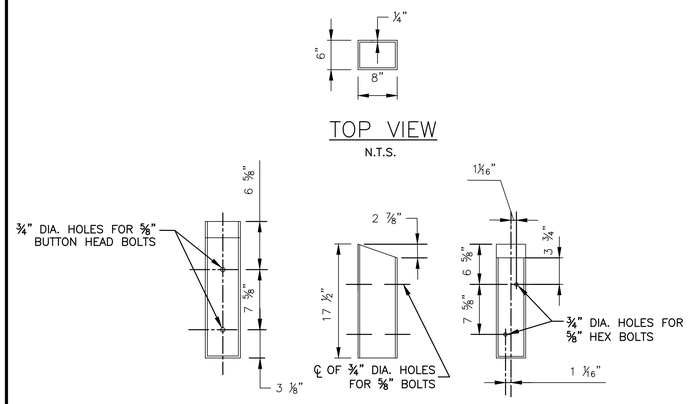

TOP VIEW
N.T.S.

FRONT VIEW
N.T.S.

SIDE VIEW
N.T.S.

BACK VIEW
N.T.S.

THRIE BEAM BLOCKOUTS DETAIL
N.T.S.

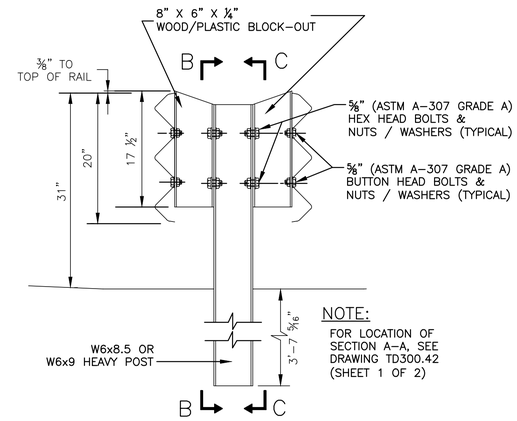

NOTE:
FOR LOCATION OF SECTION A-A, SEE DRAWING TD300.42 (SHEET 1 OF 2)

SECTION A-A
POST ELEVATION
N.T.S.

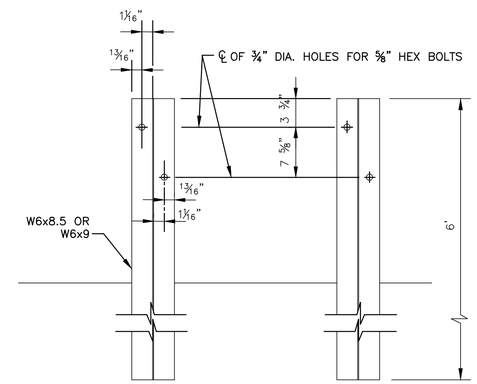

SECTION B-B
N.T.S.

SECTION C-C
N.T.S.

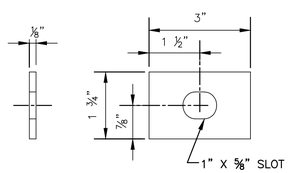

RECTANGULAR GUIDERAIL PLATE WASHER
N.T.S.

NOTE:
THE RECTANGULAR WASHERS SHALL BE USED AT THRIE BEAM AND TRANSITION SECTION POSTS (BETWEEN BUTTON HEAD BOLT AND BEAM)

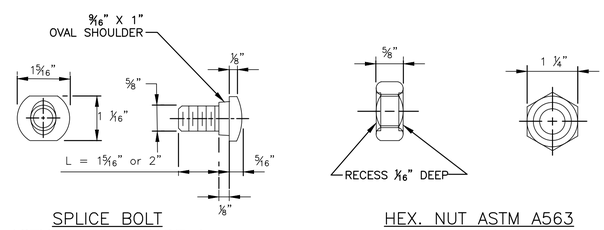

SPLICE BOLT
ASTM A-307 GRADE A

HEX. NUT ASTM A563
GRADE A OR BETTER

DETAIL "A"
BEAM SPLICE HARDWARE
(EXCLUDING BLOCKOUT CONNECTION)
N.T.S.

Sheet of

THE PORT AUTHORITY OF NY & NJ

CHIEF

No.	Date	Revision	Approved

ENGINEERING DEPARTMENT

PANYNJ Traffic Standard Details

TRAFFIC

Title
GUIDE RAIL DETAILS

TRANSITION BETWEEN DUAL FACED W-BEAM GUIDE RAIL & CONCRETE MEDIAN BARRIER (SHEET 2 OF 2)

This drawing subject to conditions in contract. All inventions, ideas, designs and methods herein are reserved to Port Authority and may not be used without its written consent.
All recipients of Contract documents, including bidders and those who do not bid and their prospective subcontractors and suppliers who may receive all or a part of the Contract documents or copies thereof, shall make every effort to ensure the secure and appropriate disposal of the Contract documents to prevent further disclosure of the information contained in the documents. Secure and appropriate disposal includes methods of document destruction such as shredding or arrangements with refuse handlers that ensure that third persons will not have access to the documents' contents either before, during, or after disposal. Documents may also be returned for disposal purposes to the Contract Desk on the 3rd Floor, 3 Gateway Center, Newark NJ 07102 or the office of the Director of Procurement, One Madison Avenue, 7th Floor, New York NY 10010.
It is a violation of law for any person to alter a document in any way, unless acting under the direction of a licensed professional engineer or registered architect. If this document bearing the seal of an engineer/architect is altered, the altering engineer/architect shall affix to the document their seal and the notation "altered by" followed by their signature and the date of such alteration, and a specific description of the alteration.

Designed by Drawn by Checked by

Date **03/14/2014**

Contract Number

Drawing Number **TD300.27**

PID#

BAR LIST											
MARK	SIZE	NO.	LENGTH	USE	A	B	C	D	H	K	LOCATION
4SM1H	4	4	VARIES FROM 7'–10" TO 8'	STIRRUP	10"	46"	1 ½"	VARIES FROM 4" TO 6"	—	—	AT CONCRETE BARRIER END
4SM2H	4	1	8'–7½"	STIRRUP	13 ¼"	46"	1 ½"	13"	—	—	AT 33" FROM THE MIDPOINT OF THE BARRIER UNIT
4SM3H	4	4	VARIES FROM 7'–2½" TO 7'–11"	STIRRUP	VARIES FROM 1'–2" TO 1'–6"	VARIES FROM 3' TO 3'–3"	1½"	—	—	—	AT CORRUGATED RAIL END
4SM5	4	8	30"	STRAIGHT	—	—	—	—	—	—	4 AT EACH END
4SM6H	4	1	9'	STIRRUP	18"	46"	1 ½"	—	—	—	AT 33" FROM THE MIDPOINT OF THE BARRIER UNIT
5SM1	5	2	13'–1"	STRINGER	—	—	—	11'–3"	1⅛"	1'–10 ⅝"	LONGITUDINAL 2 IN TOP
5SM2	5	1	8'–8"	STRINGER	—	—	—	6'–6"	3"	2'–2"	LONGITUDINAL 1 IN TOP
5SM3	5	1	19'–8"	STRAIGHT	—	—	—	—	—	—	LONGITUDINAL 1 IN BOTTOM
5SM4	5	1	19'–8"	STRINGER	—	—	—	18'–3"	4"	1'–4 ¾"	LONGITUDINAL 1 IN BOTTOM
5SM5	5	1	7'–2"	STRINGER	—	—	—	5'	3"	2'–2"	LONGITUDINAL 1 IN TOP
5SM6	5	1	3'–4"	STRINGER	—	—	—	24"	4"	1'–3 ¾"	LONGITUDINAL 1 IN TOP

BARS ARE TO BE EPOXY COATED

NOTES:

1. SURFACE SHALL BE SMOOTH.
2. UNLESS INDICATED OTHERWISE, MATERIALS AND CONSTRUCTION DETAILS SHOULD CONFORM AND/OR BE PERFORMED IN ACCORDANCE WITH CURRENT PORT AUTHORITY, NYSDOT AND/OR NJDOT SPECIFICATION FOR SUCH ITEM. PRIOR APPROVAL WITH THE PORT AUTHORITY ENGINEER IS REQUIRED.
3. THE BEND MAY BE ELIMINATED PROVIDED 2" MIN. COVER IS MAINTAINED.

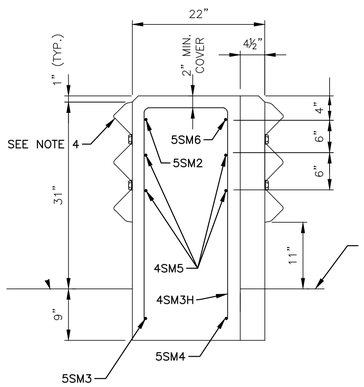

SECTION A–A

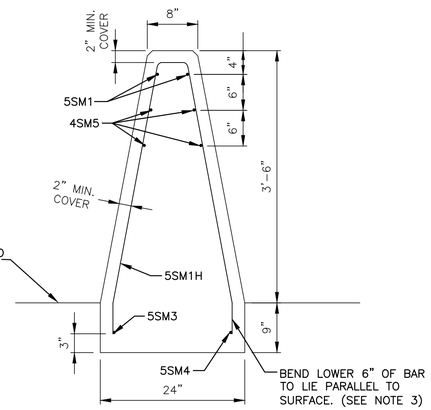

SECTION B–B

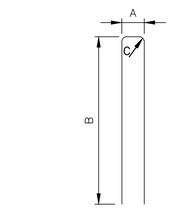

4SM6H & 4SM3H
N.T.S.

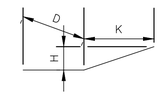

5SM1, 5SM2, 5SM4 5SM5 & 5SM6
N.T.S.

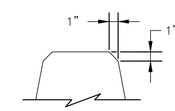

TYPICAL CHAMFER DETAIL
N.T.S.

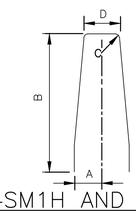

4SM1H AND 4SM2H
N.T.S.

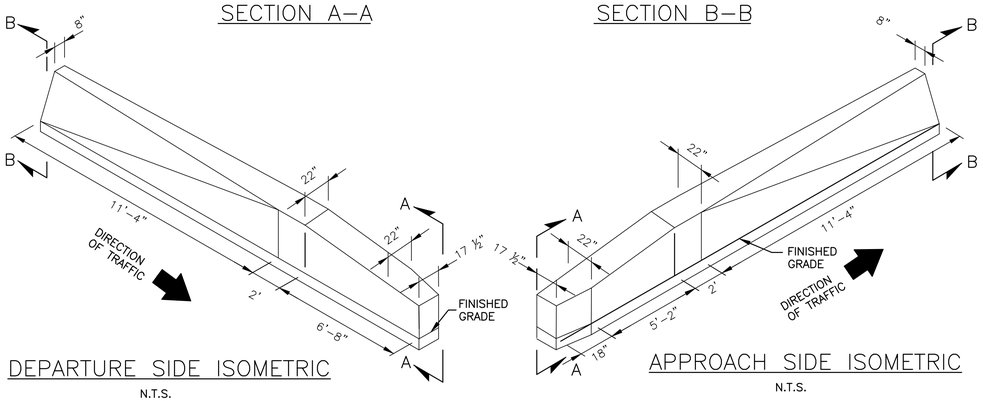

DEPARTURE SIDE ISOMETRIC
N.T.S.

APPROACH SIDE ISOMETRIC
N.T.S.

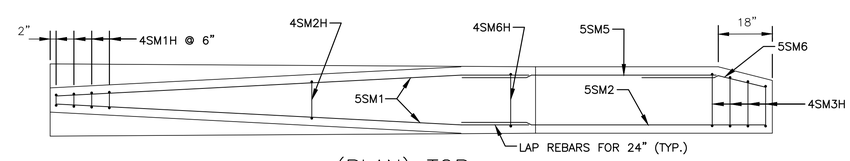

(PLAN) TOP
N.T.S.

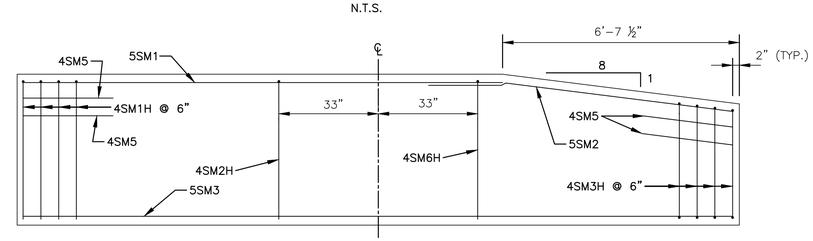

REINFORCEMENT ELEVATION
N.T.S.

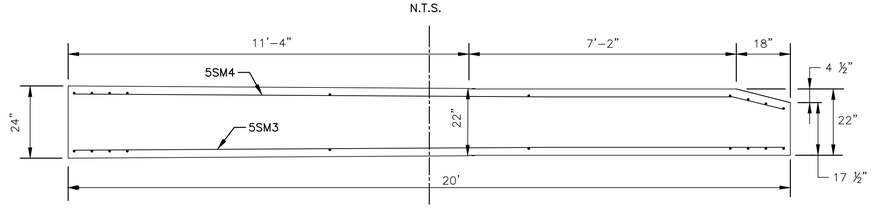

(PLAN) BOTTOM
N.T.S.

Sheet of

THE PORT AUTHORITY OF NY & NJ

CHIEF

No.	Date	Revision	Approved

ENGINEERING DEPARTMENT

PANYNJ Traffic Standard Details

TRAFFIC

Title

GUIDE RAIL DETAILS

TRANSITION BETWEEN DUAL FACED W-BEAM GUIDE RAIL AND SINGLE SLOPE CONCRETE MEDIAN BARRIER

This drawing subject to conditions in contract. All inventions, ideas, designs and methods herein are reserved to Port Authority and may not be used without its written consent.
All recipients of Contract documents, including bidders and those who do not bid and their prospective subcontractors and suppliers who may receive all or a part of the Contract documents or copies thereof, shall make every effort to ensure the secure and appropriate disposal of the Contract documents to prevent further disclosure of the information contained in the documents. Secure and appropriate disposal includes methods of document destruction such as shredding or arrangements with refuse handlers that ensure that third persons will not have access to the documents' contents either before, during, or after disposal. Documents may also be returned for disposal purposes to the Contract Desk on the 3rd Floor, 3 Gateway Center, Newark NJ 07102 or the office of the Director of Procurement, One Madison Avenue, 7th Floor, New York NY 10010.
It is a violation of law for any person to alter a document in any way, unless acting under the direction of a licensed professional engineer or registered architect. If this document bearing the seal of an engineer/architect is altered, the altering engineer/architect shall affix to the document their seal and the notation "altered by" followed by their signature and the date of such alteration, and a specific description of the alteration.

Designed by Drawn by Checked by

Date **03/14/2014**

Contract Number

Drawing Number **TD300.28**

PID#

BAR LIST											
MARK	SIZE	NO.	LENGTH	USE	A	B	C	D	H	K	LOCATION
4SM1H	4	4	VARIES FROM 6'–2" TO 6'–5"	STIRRUP	5 ¼"	3'	1 ½"	VARIES FROM 2 ⅝" TO 4 ⅞"	—	—	AT CONCRETE BARRIER END
4SM2H	4	1	7'	STIRRUP	7 ¼"	3'	1 ½"	11 ¾"	—	—	AT 33" FROM THE MIDPOINT OF THE BARRIER UNIT
4SM3H	4	4	VARIES FROM 7' TO 7'–4"	STIRRUP	VARIES FROM 1'–2" TO 1'–6"	3'	1 ½"	—	—	—	AT CORRUGATED RAIL END
4SM5	4	8	2'–6"	STRAIGHT	—	—	—	—	—	—	4 AT EACH END
4SM6H	4	1	7'–4½"	STIRRUP	18"	3'	1 ½"	—	—	—	AT 33" FROM THE MIDPOINT OF THE BARRIER UNIT
5SM1	5	1	13'–2"	STRINGER	—	—	—	11'–2"	1 ¼"	24"	LONGITUDINAL 1 IN TOP
5SM2	5	1	19'–8"	STRINGER	—	—	—	11'–2"	6"	8'–6"	LONGITUDINAL 1 IN TOP
5SM3	5	1	19'–8"	STRINGER	—	8'	—	1'–6"	3 ¾"	10'–1"	LONGITUDINAL 1 IN BOTTOM
5SM4	5	1	13'–7"	STRINGER	—	24"	—	1'–6"	3 ¾"	10'–1"	LONGITUDINAL 1 IN BOTTOM
5SM5	5	2	8'–6"	STRINGER	—	—	—	7'–1"	4"	1'–5"	LONGITUDINAL 1 IN TOP, 1 IN BOTTOM

BARS ARE TO BE EPOXY COATED

NOTES:

1. SURFACE SHALL BE SMOOTH.
2. UNLESS INDICATED OTHERWISE, MATERIALS AND CONSTRUCTION DETAILS SHOULD CONFORM AND/OR BE PERFORMED IN ACCORDANCE WITH CURRENT PORT AUTHORITY, NYSDOT AND/OR NJDOT SPECIFICATION FOR SUCH ITEM. PRIOR APPROVAL WITH THE PORT AUTHORITY ENGINEER IS REQUIRED.
3. FOR CORRUGATED MEDIAN BARRIER TRANSITION DETAILS SEE STANDARD SHEET TITLED TRANSITION BETWEEN HPBO CORRUGATED MEDIAN BARRIER AND CONCRETE MEDIAN BARRIER. (2 SHEETS).

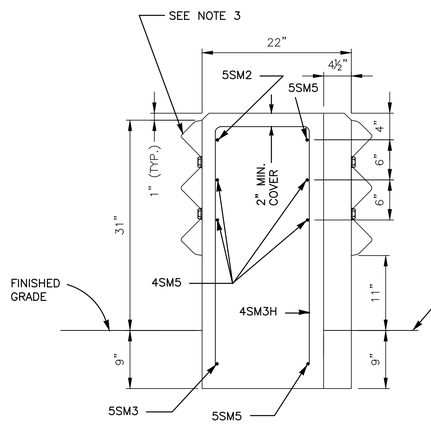

SECTION A–A

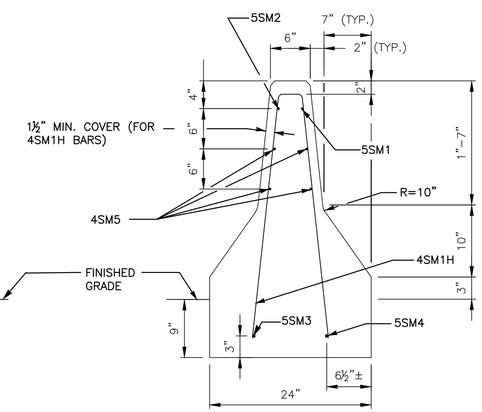

SECTION B–B

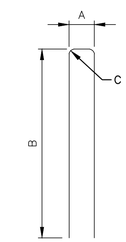

4SM6H & 4SM3H

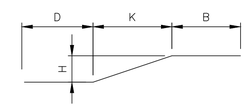

5SM1THRU 5SM6

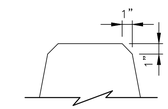

TYPICAL CHAMFER DETAIL

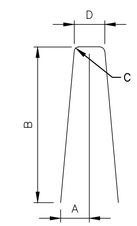

4SM2H & 4SM1H

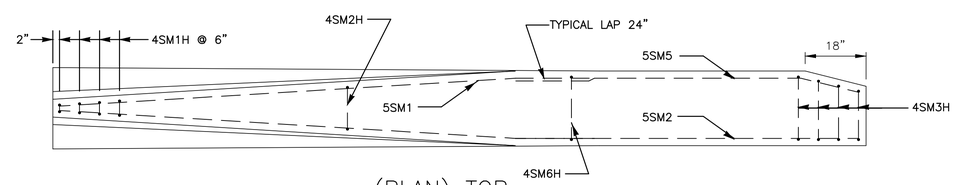

(PLAN) TOP
N.T.S.

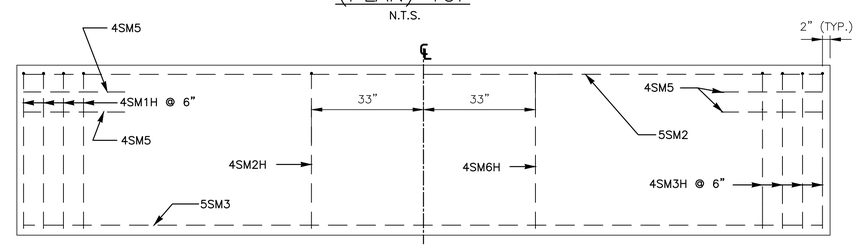

REINFORCEMENT ELEVATION
N.T.S.

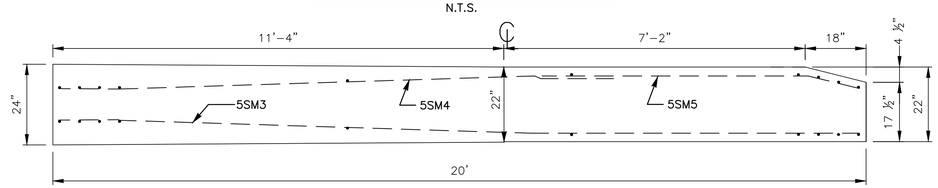

(PLAN) BOTTOM
N.T.S.

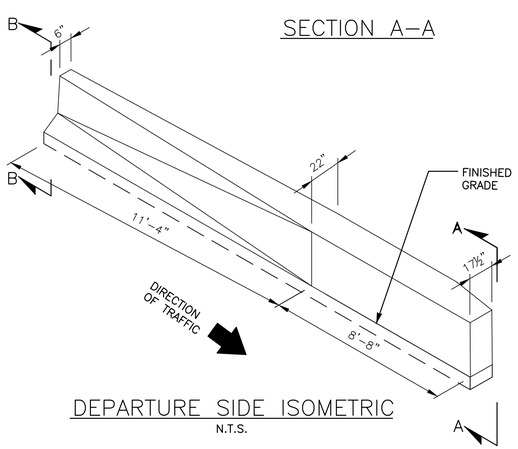

DEPARTURE SIDE ISOMETRIC
N.T.S.

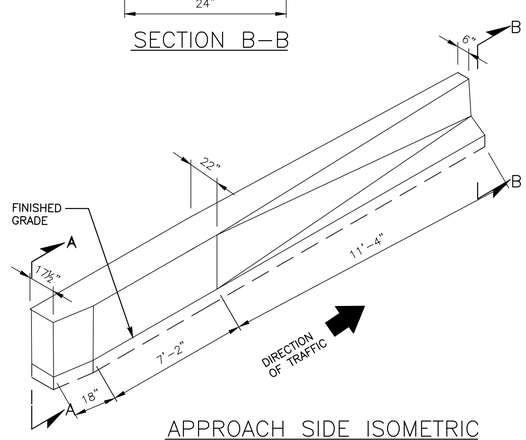

APPROACH SIDE ISOMETRIC
N.T.S.

Sheet of

THE PORT AUTHORITY OF NY & NJ

CHIEF

No.	Date	Revision	Approved

ENGINEERING DEPARTMENT

PANYNJ Traffic Standard Details

TRAFFIC

Title

GUIDE RAIL DETAILS

TRANSITION BETWEEN DUAL FACED W-BEAM GUIDE RAIL AND CONCRETE MEDIAN BARRIER

This drawing subject to conditions in contract. All inventions, ideas, designs and methods herein are reserved to Port Authority and may not be used without its written consent.
All recipients of Contract documents, including bidders and those who do not bid and their prospective subcontractors and suppliers who may receive all or a part of the Contract documents or copies thereof, shall make every effort to ensure the secure and appropriate disposal of the Contract documents to prevent further disclosure of the information contained in the documents. Secure and appropriate disposal includes methods of document destruction such as shredding or arrangements with refuse handlers that ensure that third persons will not have access to the documents' contents either before, during, or after disposal. Documents may also be returned for disposal purposes to the Contract Desk on the 3rd Floor, 3 Gateway Center, Newark NJ 07102 or the office of the Director of Procurement, One Madison Avenue, 7th Floor, New York NY 10010.
It is a violation of law for any person to alter a document in any way, unless acting under the direction of a licensed professional engineer or registered architect. If this document bearing the seal of an engineer/architect is altered, the altering engineer/architect shall affix to the document their seal and the notation "altered by" followed by their signature and the date of such alteration, and a specific description of the alteration.

Designed by Drawn by Checked by

Date **03/14/2014**

Contract Number

Drawing Number **TD300.29**

PID#

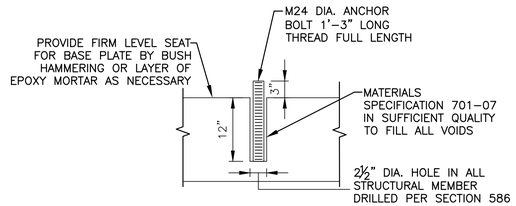

ANCHOR BOLT INSTALLATION

N.T.S.

FOR USE ON PORTLAND CEMENT CONCRETE MEDIANS OR STRUCTURES

NOTES:

1. STRUCTURAL STEEL PLATES AND SHAPES SHALL CONFORM TO ASTM A36 AND SHALL BE GALVANIZED PER ASTM A123.
2. STEEL BOLTS, NUTS AND WASHERS SHALL CONFORM TO ASTM A307. UNLESS DESIGNATED AS HIGH STRENGTH. HIGH STRENGTH BOLTS, NUTS AND WASHERS SHALL CONFROM TO ASTM A325. HARDWARE SHALL BE GALVANIZED PER ASTM A153.
3. REINFORCEMENT SHALL CONFORM TO ASTM A615, GRADE 60.
4. FOR GUIDE RAIL ATTACHMENT TO SIDEWALK, HIGH STRENGTH BOLTS FOR BASE PLATE ANCHORAGE SHALL BE FULLY THREADED AND INSTALLED IN CORED HOLES NO GREATER THAN THE BOLT DIAMETER PLUS ¼" CARE SHALL BE EXERCISED TO AVOID DAMAGE TO EXISTING REINFORCEMENT AND CONDUITS. MINIMUM EMBEDMENT LENGTH SHALL BE 6". BOLTS SHALL BE EPOXY GROUTED IN PLACE PER MANUFACTURER'S RECOMMENDATIONS TO ATTAIN A MINIMUM PULLOUT STRENGTH OF 24,000 POUNDS AT THE CONSTRUCTION SITE AS CERTIFIED BY THE CONTRACTOR.
5. FOR GUIDE RAIL ATTACHMENT TO FOOTING, HIGH STRENGTH BOLTS FOR BASE PLATE ANCHORAGE MAY BE CAST IN PLACE IN FRESH CONCRETE WITH A MINIMUM OF EMBEDMENT LENGTH OF 20".
6. WELDING OF POSTS TO BASE PLATES SHALL CONFORM TO THE ANSI/AASHTO/AWS D1.5 BRIDGE WELDING CODE.
7. MEASURED FROM TOP OF CURB IF ROADWAY CURB EXISTS, OTHERWISE MEASURED FROM GUTTER LINE.
8. WHEN THE CONFIGURATION OF BRIDGE ABUTMENTS AND WINGWALLS DO NOT ACCOMODATE THE INSTALLATION OF POST 1, THE POST MAY BE ATTACHED TO THE ABUTMENT HEADER WITH THE USE OF A BASE PLATE.

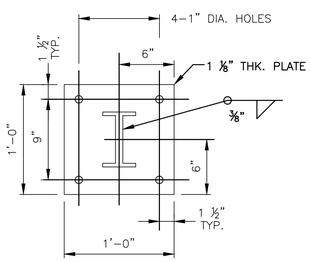

BASE PLATE

N.T.S.

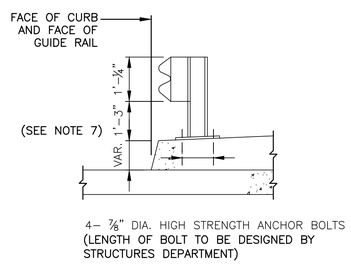

SECTION

N.T.S.

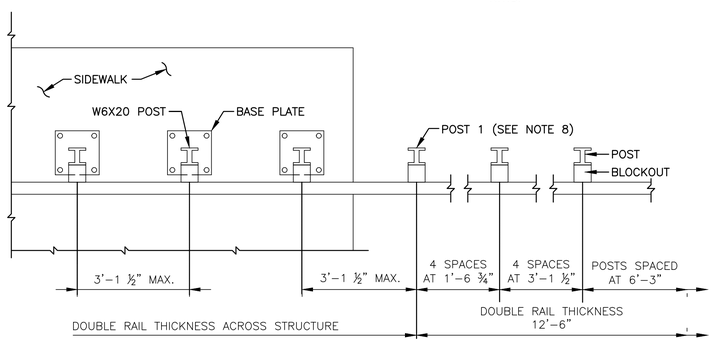

PLAN

N.T.S.

GUIDE RAIL ATTACHMENT TO SIDEWALK ON STRUCTURE

N.T.S.

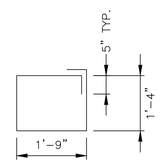

STIRRUP

N.T.S.

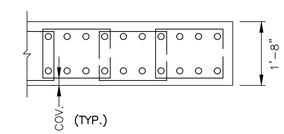

SECTION A-A

N.T.S.

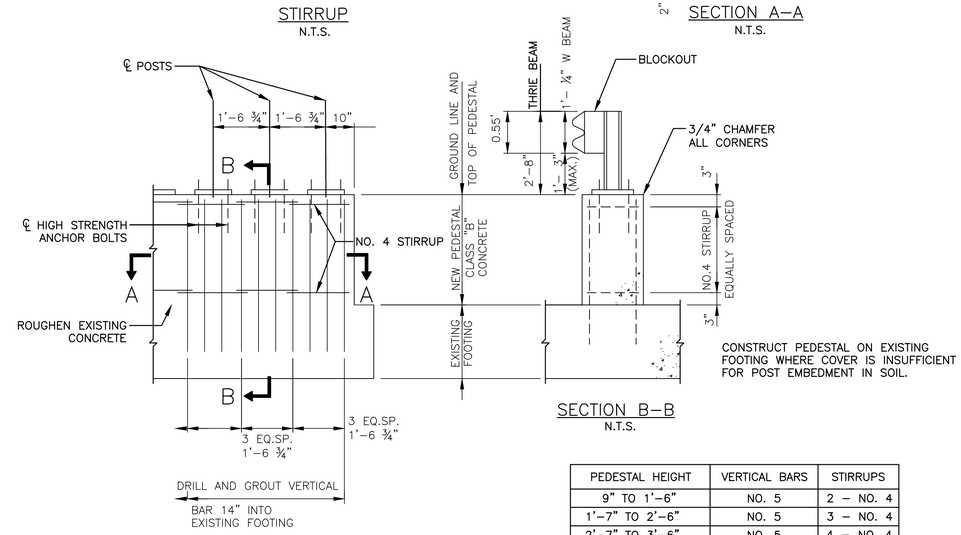

SECTION B-B

N.T.S.

PEDESTAL HEIGHT	VERTICAL BARS	STIRRUPS
9" TO 1'-6"	NO. 5	2 – NO. 4
1'-7" TO 2'-6"	NO. 5	3 – NO. 4
2'-7" TO 3'-6"	NO. 5	4 – NO. 4
3'-7" TO 4'-0"	NO. 5	5 – NO. 4

GUIDE RAIL ATTACHMENT TO FOOTING

N.T.S.

Sheet of

THE PORT AUTHORITY OF NY & NJ

CHIEF

No.	Date	Revision	Approved

ENGINEERING DEPARTMENT

PANYNJ Traffic Standard Details

TRAFFIC

Title

GUIDE RAIL DETAILS

GUIDE RAIL ATTACHMENT TO SIDEWALK, FOOTING AND PARAPET

This drawing subject to conditions in contract. All inventions, ideas, designs and methods herein are reserved to Port Authority and may not be used without its written consent.
All recipients of Contract documents, including bidders and those who do not bid and their prospective subcontractors and suppliers who may receive all or a part of the Contract documents or copies thereof, shall make every effort to ensure the secure and appropriate disposal of the Contract documents to prevent further disclosure of the information contained in the documents. Secure and appropriate disposal includes methods of document destruction such as shredding or arrangements with refuse handlers that ensure that third persons will not have access to the documents' contents either before, during, or after disposal. Documents may also be returned for disposal purposes to the Contract Desk on the 3rd Floor, 3 Gateway Center, Newark NJ 07102 or the office of the Director of Procurement, One Madison Avenue, 7th Floor, New York NY 10010.
It is a violation of law for any person to alter a document in any way, unless acting under the direction of a licensed professional engineer or registered architect. If this document bearing the seal of an engineer/architect is altered, the altering engineer/architect shall affix to the document their seal and the notation "altered by" followed by their signature and the date of such alteration, and a specific description of the alteration.

Designed by Drawn by Checked by

Date **03/14/2014**

Contract Number

Drawing Number **TD300.30**

PID#

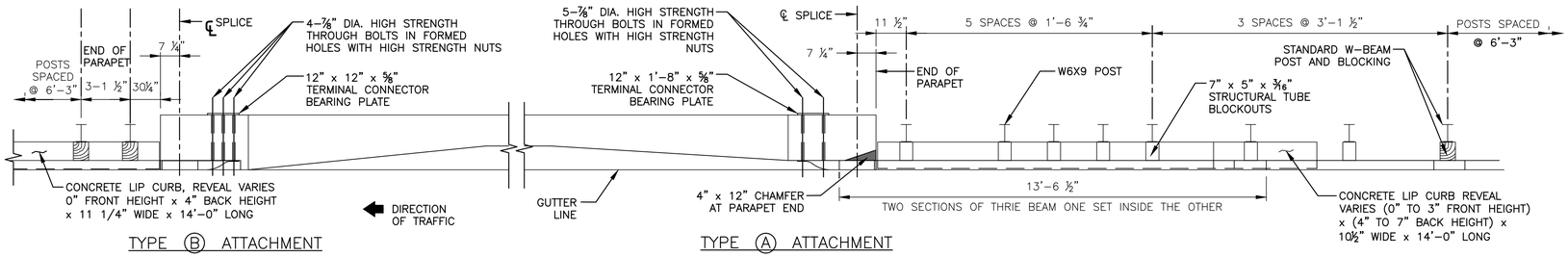

TYPE Ⓑ ATTACHMENT

TYPE Ⓐ ATTACHMENT

PLAN

N.T.S.

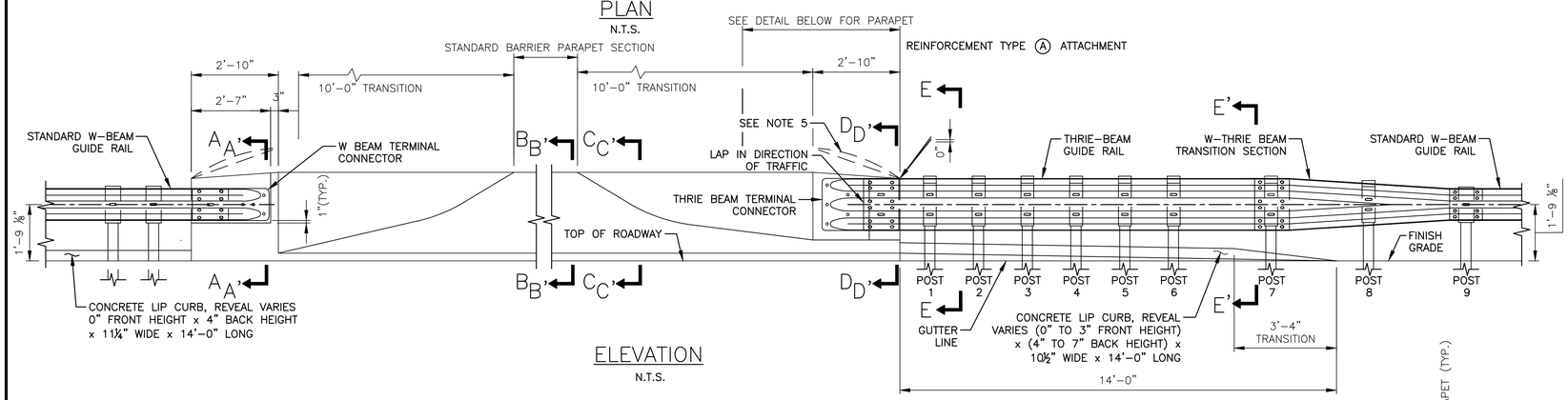

ELEVATION

N.T.S.

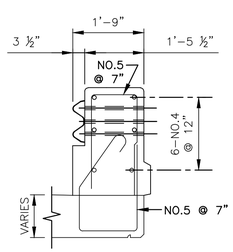

SECTION A–A (ON SPAN)

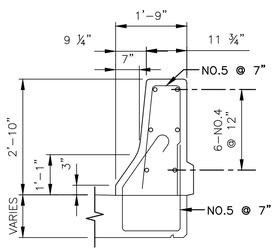

SECTION B–B (ON SPAN)

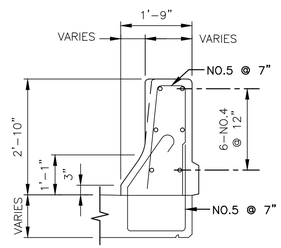

SECTION C–C (ON SPAN)

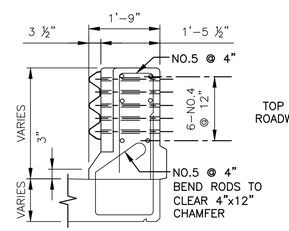

SECTION D–D (ON SPAN)

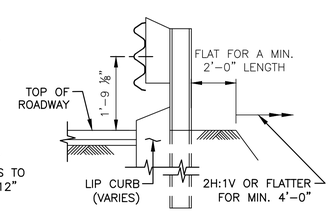

SECTION E–E

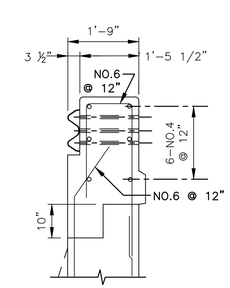

SECTION A'–A' (ON WINGWALL)

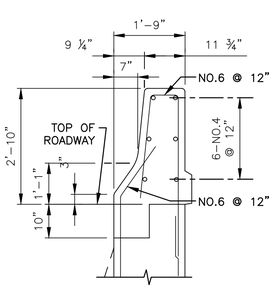

SECTION B'–B' (ON WINGWALL)

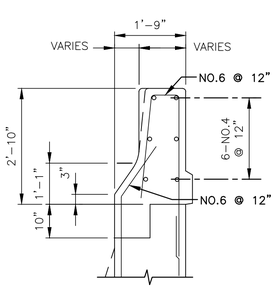

SECTION C'–C' (ON WINGWALL)

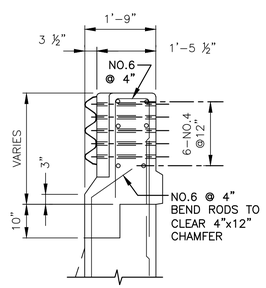

SECTION D'–D' (ON WINGWALL)

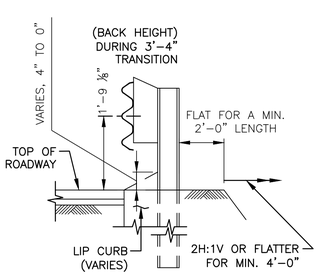

SECTION E'–E'

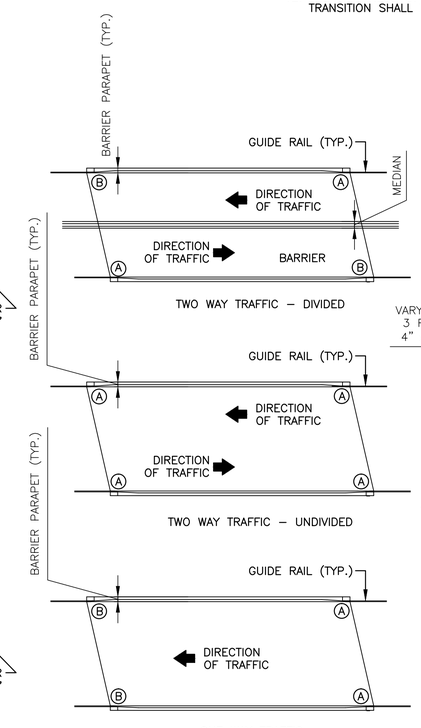

BRIDGE ATTACHMENT TYPES

N.T.S.

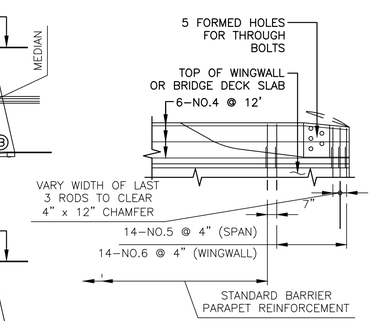

INTERIOR ELEVATION PARAPET REINFORCEMENT TYPE Ⓐ ATTACHMENT

NOTES:

1. THIS GUIDE RAIL TRANSITION IS APPROPRIATE FOR CONNECTION TO A VERTICAL CONCRETE SHAPE AND SHOULD NOT BE CONNECTED DIRECTLY TO A CONCRETE SAFETY SHAPE. CONCRETE SAFETY BARRIER SHOULD BE TRANSITIONED TO A VERTICAL SHAPE AT THE GUIDE RAIL CONNECTION.
2. FOR RECOMMENDED ATTACHMENT, REFER TO "BRIDGE ATTACHMENT TYPES", THIS SHEET.
3. ALL CROSS SLOPES BETWEEN THE PAVEMENT EDGE AND POSTS SHALL BE 10H:1V OR FLATTER.
4. EMBANKMENT SHALL EXTEND FLAT BEHIND THE POSTS AT LEAST 2'-0" AT WHICH POINT A SLOPE OF NO STEEPER THAN 2H:1V SHOULD EXTEND A MINIMUM OF 4'-0" FURTHER.
5. BARRIER PARAPET END MAY HAVE TO BE RECONFIGURED TO ACCEPT DIFFERENT TYPES OF RAILING OR FENCING THAT MAY BE MOUNTED ON TOP OF THE PARAPET.
6. AT TYPE A ATTACHMENTS, THRIE BEAM RAIL ELEMENT WILL REQUIRE ADDITIONAL POST MOUNTING HOLES FOR POST NO.1, NO.3 AND NO.5. CAUTION, HOLES ARE TO BE SHOP PUNCHED OR DRILLED BEFORE GALVANIZATION. NO FIELD DRILLING IS PERMITTED.
7. POSTS 1 THRU 7 SHALL BE 7'-2" LONG WITH 4'-10" POST EMBEDMENT. POST 8 SHALL BE 6'-8" LONG WITH 4'-6" POST EMBEDMENT. POST 9 SHALL BE 6'-8" LONG WITH 4'-4" POST EMBEDMENT.
8. LOCATE CONDUIT AT END OF BARRIER PARAPETS SO AS NOT TO INTERFERE WITH GUIDE RAIL POST SPACING.
9. LOCATE DRAINAGE INLETS AND ELECTRICAL JUNCTION BOXES ON APPROACHES SO AS NOT TO INTERFERE WITH GUIDE RAIL POST SPACING.
10. STRUCTURAL STEEL PLATES AND SHAPES SHALL CONFORM TO ASTM A709 AND SHALL BE GALVANIZED PER ASTM A123.
11. HIGH STRENGTH STEEL BOLTS, NUTS AND WASHERS SHALL CONFORM TO ASTM A325. ZINC COATED BOLTS, NUTS AND WASHERS SHALL BE TREATED ACCORDING TO ASTM A153.
12. THE THICKNESS OF THRIE–BEAM, W–BEAM AND W–THRIE BEAM TRANSITION SHALL BE 12–GAUGE.

Sheet of

THE PORT AUTHORITY OF NY & NJ

CHIEF

No.	Date	Revision	Approved

ENGINEERING DEPARTMENT

PANYNJ Traffic Standard Details

TRAFFIC

Title

GUIDE RAIL DETAILS

W-BEAM GUIDE RAIL ATTACHMENT TO JERSEY SHAPE PARAPET (NO ROADWAY CURBING ON APPROACH)

This drawing subject to conditions in contract. All inventions, ideas, designs and methods herein are reserved to Port Authority and may not be used without its written consent.
All recipients of Contract documents, including bidders and those who do not bid and their prospective subcontractors and suppliers who may receive all or a part of the Contract documents or copies thereof, shall make every effort to ensure the secure and appropriate disposal of the Contract documents to prevent further disclosure of the information contained in the documents. Secure and appropriate disposal includes methods of document destruction such as shredding or arrangements with refuse handlers that ensure that third persons will not have access to the documents' contents either before, during, or after disposal. Documents may also be returned for disposal purposes to the Contract Desk on the 3rd Floor, 3 Gateway Center, Newark NJ 07102 or the office of the Director of Procurement, One Madison Avenue, 7th Floor, New York NY 10010.
It is a violation of law for any person to alter a document in any way, unless acting under the direction of a licensed professional engineer or registered architect. If this document bearing the seal of an engineer/architect is altered, the altering engineer/architect shall affix to the document their seal and the notation "altered by" followed by their signature and the date of such alteration, and a specific description of the alteration.

Designed by	Drawn by	Checked by
Date	03/14/2014	

Contract Number

Drawing Number **TD300.31**

PID#

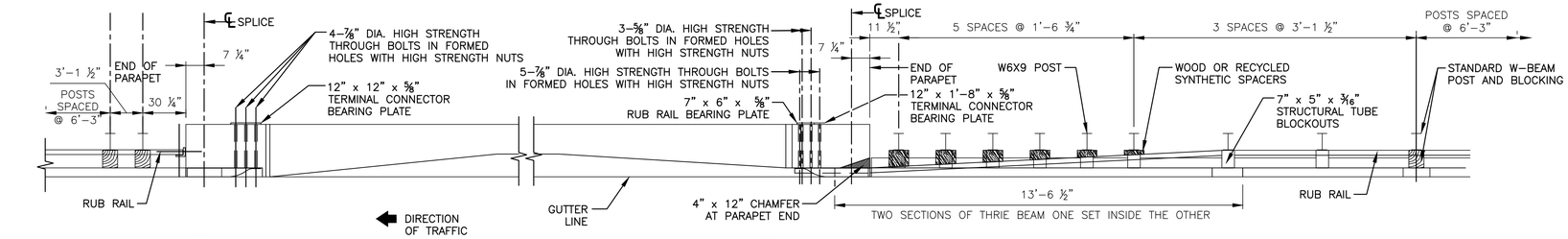

TYPE (B) ATTACHMENT

TYPE (A) ATTACHMENT

PLAN

N.T.S.

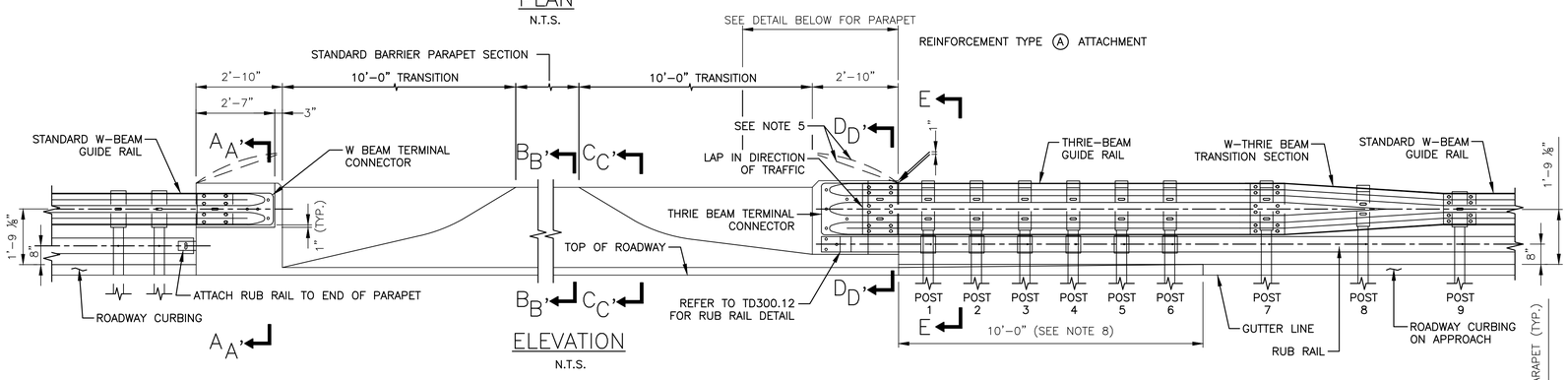

ELEVATION

N.T.S.

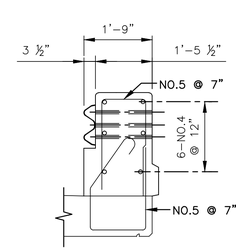

SECTION A–A (ON SPAN)

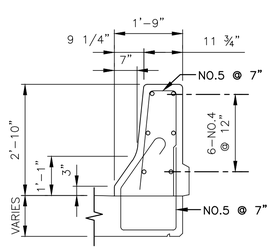

SECTION B–B (ON SPAN)

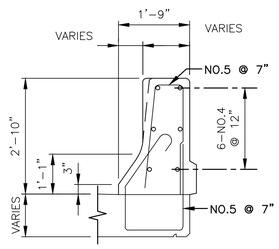

SECTION C–C (ON SPAN)

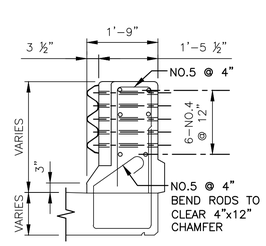

SECTION D–D (ON SPAN)

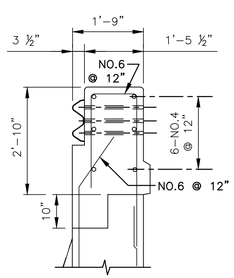

SECTION A'–A' (ON WINGWALL)

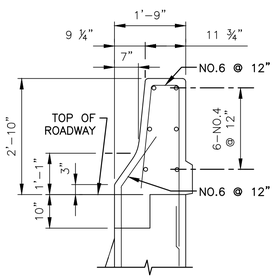

SECTION B'–B' (ON WINGWALL)

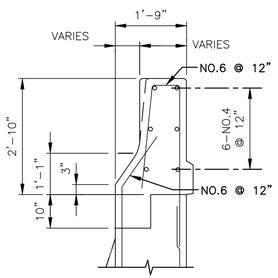

SECTION C'–C' (ON WINGWALL)

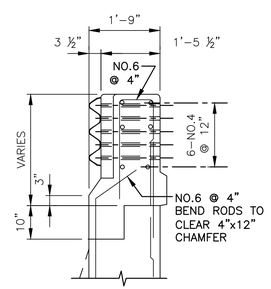

SECTION D'–D' (ON WINGWALL)

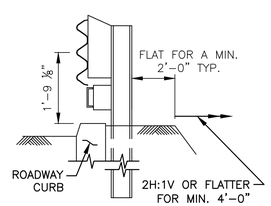

SECTION E'–E'

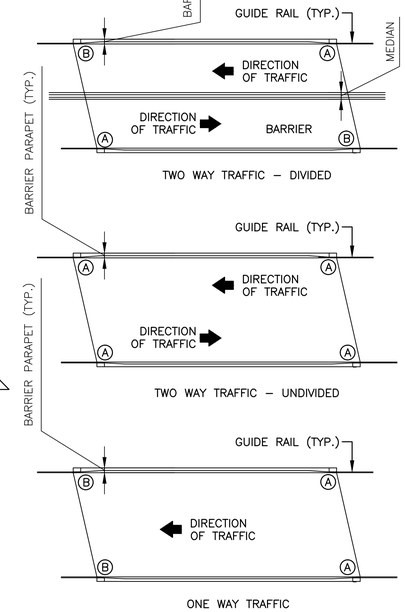

BRIDGE ATTACHMENT TYPES

N.T.S.

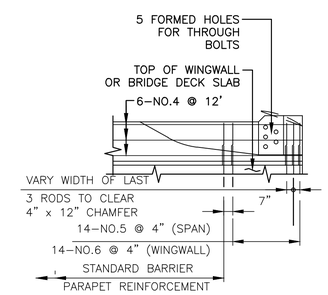

INTERIOR ELEVATION PARAPET REINFORCEMENT TYPE (A) ATTACHMENT

NOTES:

1. THIS GUIDE RAIL TRANSITION IS APPROPRIATE FOR CONNECTION TO A VERTICAL CONCRETE SHAPE AND SHOULD NOT BE CONNECTED DIRECTLY TO A CONCRETE SAFETY SHAPE. CONCRETE SAFETY BARRIER SHOULD BE TRANSITIONED TO A VERTICAL SHAPE AT THE GUIDE RAIL CONNECTION.
2. FOR RECOMMENDED ATTACHMENT, REFER TO "BRIDGE ATTACHMENT TYPES", THIS SHEET.
3. ALL CROSS SLOPES BETWEEN THE PAVEMENT EDGE AND POSTS SHALL BE 1V:10H OR FLATTER.
4. EMBANKMENT SHALL EXTEND FLAT BEHIND THE POSTS AT LEAST 2'–0" AT WHICH POINT A SLOPE OF NO STEEPER THAN 1V:2H SHOULD EXTEND A MINIMUM OF 4'–0" FURTHER.
5. BARRIER PARAPET END MAY HAVE TO BE RECONFIGURED TO ACCEPT DIFFERENT TYPES OF RAILING OR FENCING THAT MAY BE MOUNTED ON TOP OF THE PARAPET.
6. AT TYPE A ATTACHMENTS, THRIE BEAM RAIL ELEMENT WILL REQUIRE ADDITIONAL POST MOUNTING HOLES FOR POST NO.1, NO.3 AND NO.5. CAUTION, HOLES ARE TO BE SHOP PUNCHED OR DRILLED BEFORE GALVANIZATION. NO FIELD DRILLING IS PERMITTED.
7. POSTS 1 THRU 7 SHALL BE 7'–2" LONG WITH 4'–10" POST EMBEDMENT. POST 8 SHALL BE 6'–8" LONG WITH 4'–6" POST EMBEDMENT. POST 9 SHALL BE 6'–8" LONG WITH 4'–4" POST EMBEDMENT.
8. TRANSITION LAST 10 FT. OF ROADWAY CURBING TO MATCH BARRIER PARAPET SHAPE.
9. LOCATE CONDUIT AT END OF BARRIER PARAPETS SO AS NOT TO INTERFERE WITH GUIDE RAIL POST SPACING.
10. LOCATE DRAINAGE INLETS AND ELECTRICAL JUNCTION BOXES ON APPROACHES SO AS TO NOT INTERFERE WITH GUIDE RAIL POST SPACING.
11. STRUCTURAL STEEL PLATES AND SHAPES SHALL CONFORM TO ASTM A709 AND SHALL BE GALAVANIZED PER ASTM A123.
12. HIGH STRENGTH STEEL BOLTS, NUTS AND WASHERS SHALL CONFORM TO ASTM A325. ZINC COATED BOLTS, NUTS AND WASHERS SHALL BE TREATED ACCORDING TO ASTM A153.
13. THE THICKNESS OF THRIE–BEAM, W–BEAM AND W–THRIE BEAM TRANSITION SHALL BE 12–GAUGE.

Sheet of

THE PORT AUTHORITY OF NY & NJ

CHIEF

No.	Date	Revision	Approved

ENGINEERING DEPARTMENT

PANYNJ Traffic Standard Details

TRAFFIC

Title

GUIDE RAIL DETAILS

W-BEAM GUIDE RAIL ATTACHMENT TO JERSEY SHAPE PARAPET (WITH ROADWAY CURBING ON APPROACH)

This drawing subject to conditions in contract. All inventions, ideas, designs and methods herein are reserved to Port Authority and may not be used without its written consent.
All recipients of Contract documents, including bidders and those who do not bid and their prospective subcontractors and suppliers who may receive all or a part of the Contract documents or copies thereof, shall make every effort to ensure the secure and appropriate disposal of the Contract documents to prevent further disclosure of the information contained in the documents. Secure and appropriate disposal includes methods of document destruction such as shredding or arrangements with refuse handlers that ensure that third persons will not have access to the documents' contents either before, during, or after disposal. Documents may also be returned for disposal purposes to the Contract Desk on the 3rd Floor, 3 Gateway Center, Newark NJ 07102 or the office of the Director of Procurement, One Madison Avenue, 7th Floor, New York NY 10010.
It is a violation of law for any person to alter a document in any way, unless acting under the direction of a licensed professional engineer or registered architect. If this document bearing the seal of an engineer/architect is altered, the altering engineer/architect shall affix to the document their seal and the notation "altered by" followed by their signature and the date of such alteration, and a specific description of the alteration.

Designed by	Drawn by	Checked by

Date **03/14/2014**

Contract Number

Drawing Number **TD300.32**

PID#

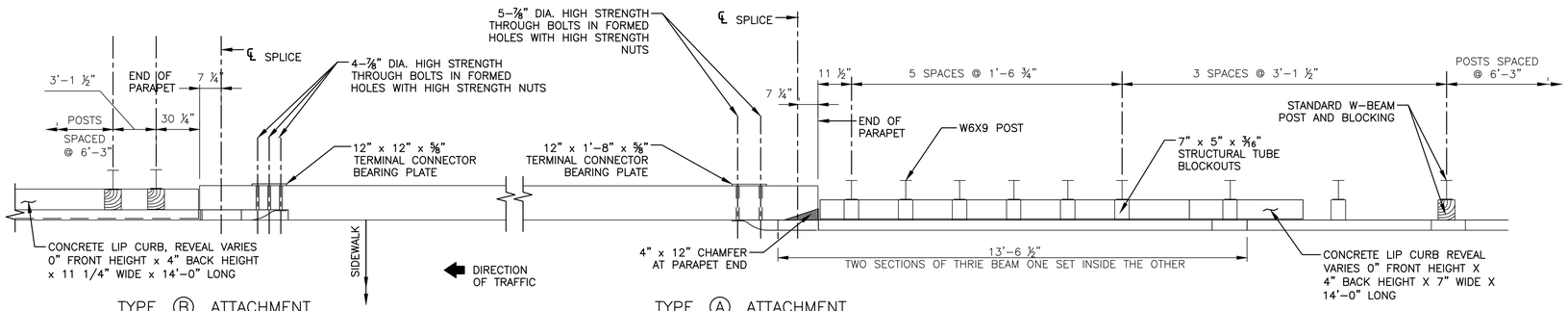

PLAN

N.T.S.

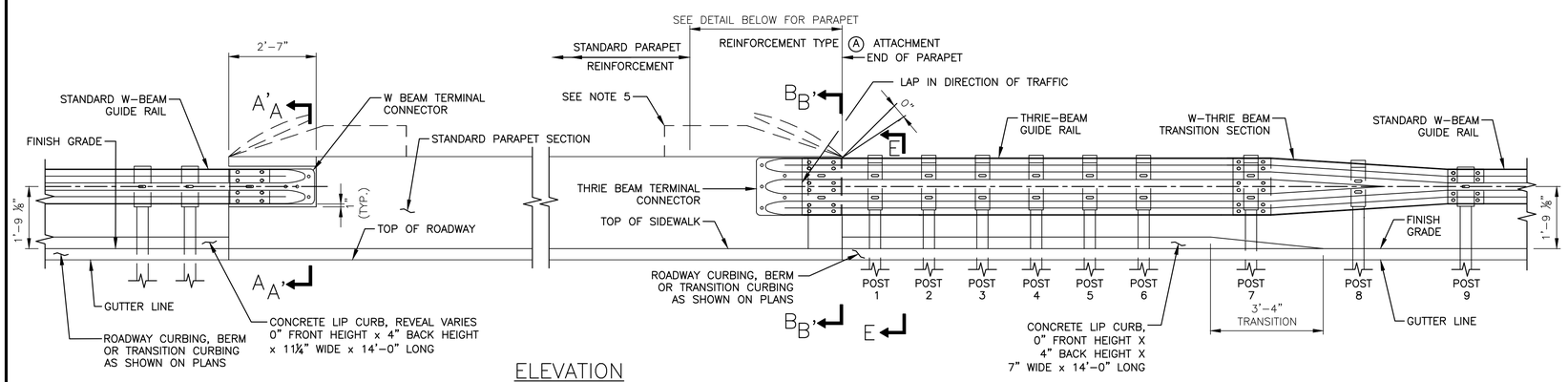

ELEVATION

N.T.S.

NOTES:

1. THIS GUIDE RAIL TRANSITION IS APPROPRIATE FOR CONNECTION TO A VERTICAL CONCRETE SHAPE.
2. FOR RECOMMENDED ATTACHMENT TYPE, REFER TO "BRIDGE ATTACHMENT TYPES", THIS SHEET.
3. ALL CROSS SLOPES BETWEEN THE PAVEMENT EDGE AND POSTS SHALL BE 10H:1V OR FLATTER.
4. EMBANKMENT SHALL EXTEND FLAT BEHIND THE POSTS AT LEAST 2'-0" AT WHICH POINT A SLOPE OF NO STEEPER THAN 2H:1V SHOULD EXTEND A MINIMUM OF 4'-0" FURTHER.
5. WHEN RAILING IS INSTALLED ON TOP OF PARAPET, PARAPET END SHALL BE MODIFIED TO ACCOMODATE HORIZONTAL RAIL ATTACHMENT TO PARAPET. REFER TO STANDARD RAILING PLATE FOR ATTACHMENT DETAILS.
6. AT TYPE A ATTACHMENTS, THRIE BEAM RAIL ELEMENT WILL REQUIRE ADDITIONAL POST MOUNTING HOLES FOR POST NOS.1, 3 & 5. CAUTION, HOLES ARE TO BE SHOP PUNCHED OR DRILLED BEFORE GALVANIZATION. NO FIELD DRILLING IS PERMITTED.
7. POSTS 1 THRU 7 SHALL BE 7'-2" LONG WITH 4'-10" POST EMBEDMENT. POST 8 SHALL BE 6'-8" LONG WITH 4'-6" POST EMBEDMENT. POST 9 SHALL BE 6'-8" LONG WITH 4'-4" POST EMBEDMENT.
8. LOCATE CONDUIT AT END OF PYLON SO AS NOT TO INTERFERE WITH GUIDE RAIL POST SPACING.
9. LOCATE DRAINAGE INLETS AND ELECTRIC JUNCTION BOXES ON APPROACHES SO AS NOT TO INTERFERE WITH GUIDE RAIL POST SPACING.
10. STRUCTURAL STEEL PLATES AND SHAPES SHALL CONFORM TO ASTM A709 AND SHALL BE GALVANIZED AS PER ASTM A123.
11. HIGH STRENGTH STEEL BOLTS, NUTS AND WASHERS SHALL CONFORM TO ASTM A325 ZINC COATED BOLTS, NUTS AND WASHERS SHALL BE TREATED ACCORDING TO ASTM A153.
12. THE THICKNESS OF THRIE-BEAM, W-BEAM AND W-THRIE BEAM TRANSITION SHALL BE 12-GAUGE.

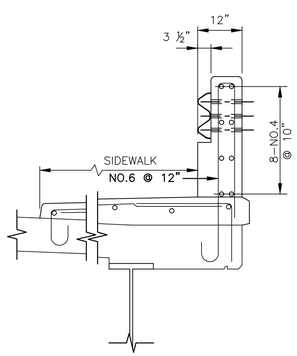

SECTION A-A
(ON SPAN)

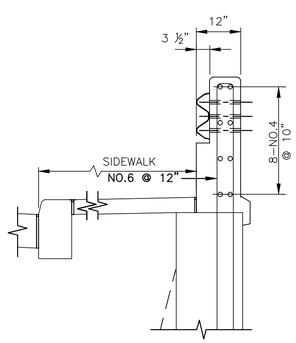

SECTION A'-A'
(ON WINGWALL)

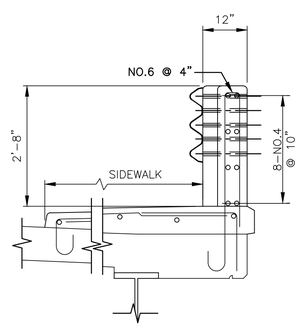

SECTION B-B
(ON SPAN)

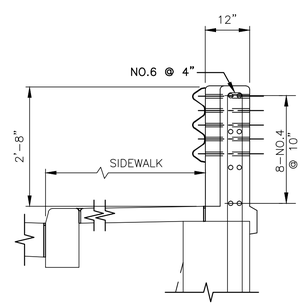

SECTION B'-B'
(ON WINGWALL)

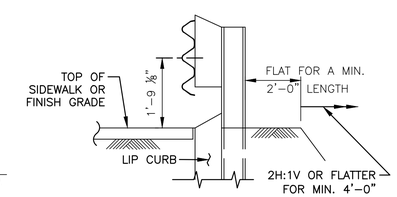

SECTION C-C

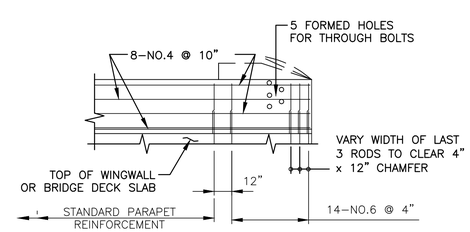

INTERIOR ELEVATION
PARAPET REINFORCEMENT
TYPE (A) ATTACHMENT

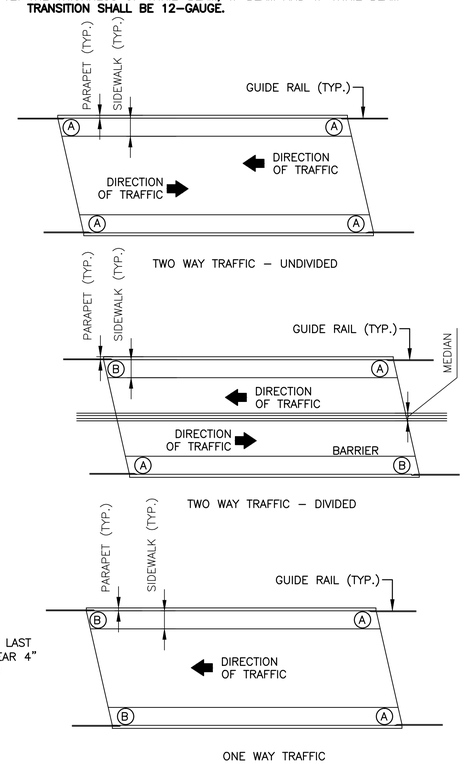

BRIDGE ATTACHMENT TYPES

N.T.S.

Sheet of

THE PORT AUTHORITY OF NY & NJ

CHIEF

No.	Date	Revision	Approved

ENGINEERING DEPARTMENT

PANYNJ Traffic Standard Details

TRAFFIC

Title

GUIDE RAIL DETAILS

W-BEAM GUIDE RAIL ATTACHMENT (SIDEWALK WITH PARAPET)

This drawing subject to conditions in contract. All inventions, ideas, designs and methods herein are reserved to Port Authority and may not be used without its written consent.
All recipients of Contract documents, including bidders and those who do not bid and their prospective subcontractors and suppliers who may receive all or a part of the Contract documents or copies thereof, shall make every effort to ensure the secure and appropriate disposal of the Contract documents to prevent further disclosure of the information contained in the documents. Secure and appropriate disposal includes methods of document destruction such as shredding or arrangements with refuse handlers that ensure that third persons will not have access to the documents' contents either before, during, or after disposal. Documents may also be returned for disposal purposes to the Contract Desk on the 3rd Floor, 3 Gateway Center, Newark NJ 07102 or the office of the Director of Procurement, One Madison Avenue, 7th Floor, New York NY 10010.
It is a violation of law for any person to alter a document in any way, unless acting under the direction of a licensed professional engineer or registered architect. If this document bearing the seal of an engineer/architect is altered, the altering engineer/architect shall affix to the document their seal and the notation "altered by" followed by their signature and the date of such alteration, and a specific description of the alteration.

Designed by Drawn by Checked by

Date **03/14/2014**

Contract Number

Drawing Number **TD300.33**

PID#

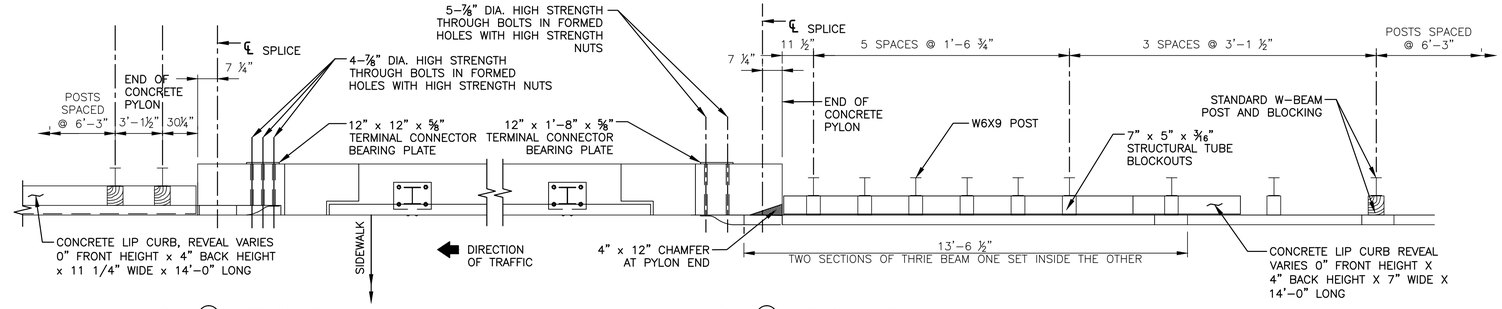

TYPE (B) ATTACHMENT

PLAN

N.T.S.

TYPE (A) ATTACHMENT

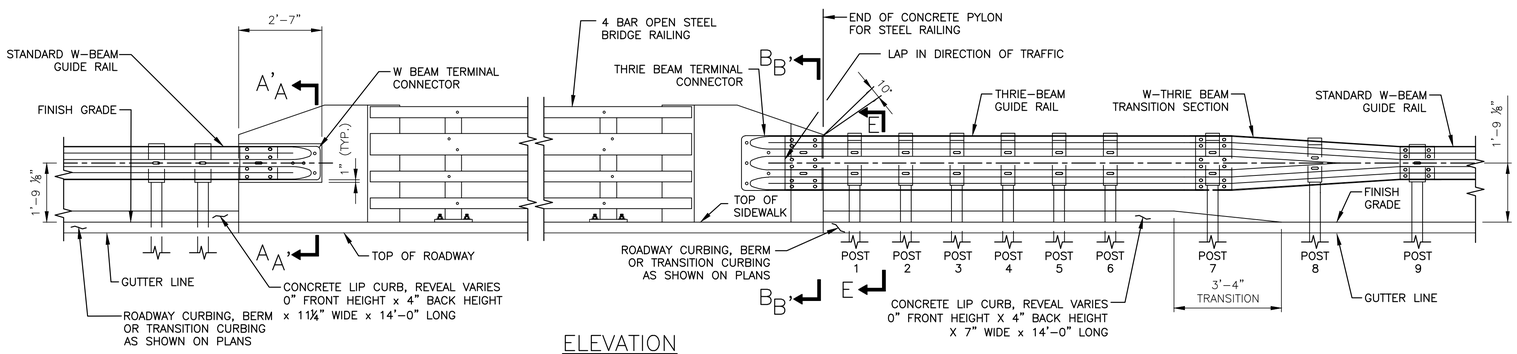

ELEVATION

N.T.S.

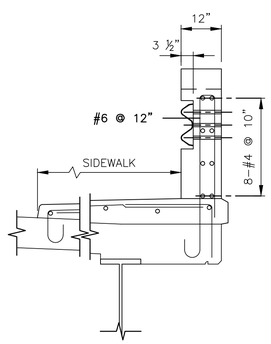

SECTION: A-A
(ON SPAN)

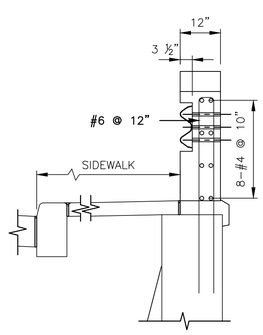

SECTION: A'-A'
(ON WINGWALL)

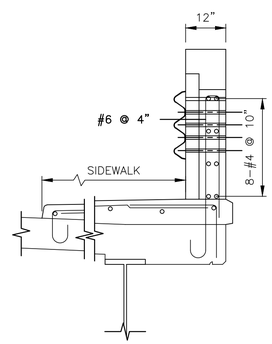

SECTION: B-B
(ON SPAN)

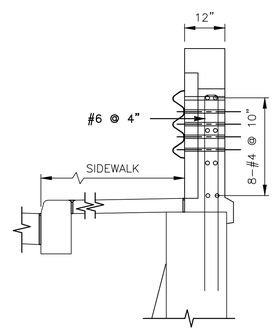

SECTION: B'-B'
(ON WINGWALL)

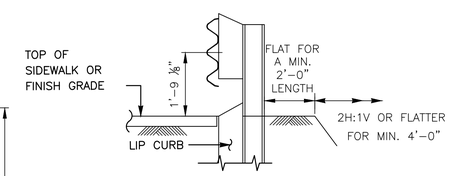

SECTION: C-C

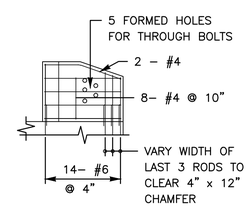

INTERIOR ELEVATION
PYLON REINFORCEMENT
TYPE (A) ATTACHMENT

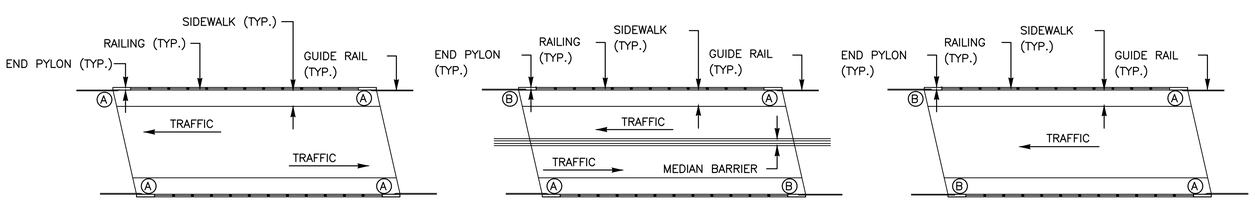

TWO WAY TRAFFIC - UNDIVIDED

TWO WAY TRAFFIC - DIVIDED

ONE WAY TRAFFIC

BRIDGE ATTACHMENT TYPES

N.T.S.

NOTES:

1. THIS GUIDE RAIL TRANSITION IS APPROPRIATE FOR CONNECTION TO A VERTICAL CONCRETE SHAPE.
2. FOR RECOMMENDED ATTACHMENT TYPE, REFER TO "BRIDGE ATTACHMENT TYPES", THIS SHEET.
3. ALL CROSS SLOPES BETWEEN THE PAVEMENT EDGE AND POSTS SHALL BE 10H:1V OR FLATTER.
4. EMBANKMENT SHALL EXTEND FLAT BEHIND THE POSTS AT LEAST 2'-0" AT WHICH POINT A SLOPE OF NO STEEPER THAN 2H:1V SHOULD EXTEND A MINIMUM OF 4'-0" FURTHER.
5. CONCRETE PYLONS TO BE CONSTRUCTED AT ALL ENDS OF STEEL RAILING. ATTACH GUIDE RAIL TO THE PYLONS.
6. AT TYPE A ATTACHMENTS, THRIE BEAM RAIL ELEMENT WILL REQUIRE ADDITIONAL POST MOUNTING HOLES FOR POST #1, 3 & 5. CAUTION, HOLES ARE TO BE SHOP PUNCHED OR DRILLED BEFORE GALVANIZATION. NO FIELD DRILLING IS PERMITTED.
7. POSTS 1 THRU 7 SHALL BE 7'-2" LONG WITH 4'-10" POST EMBEDMENT. POST 8 SHALL BE 6'-8" LONG WITH 4'-6" POST EMBEDMENT. POST 9 SHALL BE 6'-8" LONG WITH 4'-4" POST EMBEDMENT.
8. LOCATE CONDUIT AT END OF PYLON SO AS NOT TO INTERFERE WITH GUIDE RAIL POST SPACING.
9. LOCATE DRAINAGE INLETS AND ELECTRIC JUNCTION BOXES ON APPROACHES SO AS NOT TO INTERFERE WITH GUIDE RAIL POST SPACING.
10. STRUCTURAL STEEL PLATES AND SHAPES SHALL CONFORM TO ASTM A709 AND SHALL BE GALVANIZED AS PER ASTM A123.
11. HIGH STRENGTH STEEL BOLTS, NUTS AND WASHERS SHALL CONFORM TO ASTM A325. ZINC COATED BOLTS, NUTS AND WASHERS SHALL BE TREATED ACCORDING TO ASTM A153.
12. THE THICKNESS OF THRIE-BEAM, W-BEAM AND W-THRIE BEAM TRANSITION SHALL BE 12-GAUGE.

Sheet of

THE PORT AUTHORITY OF NY & NJ

CHIEF

No.	Date	Revision	Approved

ENGINEERING DEPARTMENT

PANYNJ
Traffic Standard Details

TRAFFIC

Title

GUIDE RAIL DETAILS

W-BEAM GUIDE RAIL ATTACHMENT (SIDEWALK WITH STEEL RAILING)

This drawing subject to conditions in contract. All inventions, ideas, designs and methods herein are reserved to Port Authority and may not be used without its written consent.
All recipients of Contract documents, including bidders and those who do not bid and their prospective subcontractors and suppliers who may receive all or a part of the Contract documents or copies thereof, shall make every effort to ensure the secure and appropriate disposal of the Contract documents to prevent further disclosure of the information contained in the documents. Secure and appropriate disposal includes methods of document destruction such as shredding or arrangements with refuse handlers that ensure that third persons will not have access to the documents' contents either before, during, or after disposal. Documents may also be returned for disposal purposes to the Contract Desk on the 3rd Floor, 3 Gateway Center, Newark NJ 07102 or the office of the Director of Procurement, One Madison Avenue, 7th Floor, New York NY 10010.
It is a violation of law for any person to alter a document in any way, unless acting under the direction of a licensed professional engineer or registered architect. If this document bearing the seal of an engineer/architect is altered, the altering engineer/architect shall affix to the document their seal and the notation "altered by" followed by their signature and the date of such alteration, and a specific description of the alteration.

Designed by Drawn by Checked by

Date **03/14/2014**

Contract Number

Drawing Number **TD300.34**

PID#

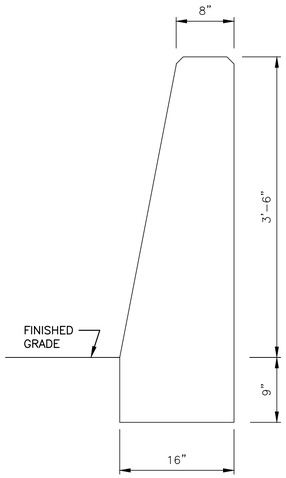

SECTION A–A
N.T.S.

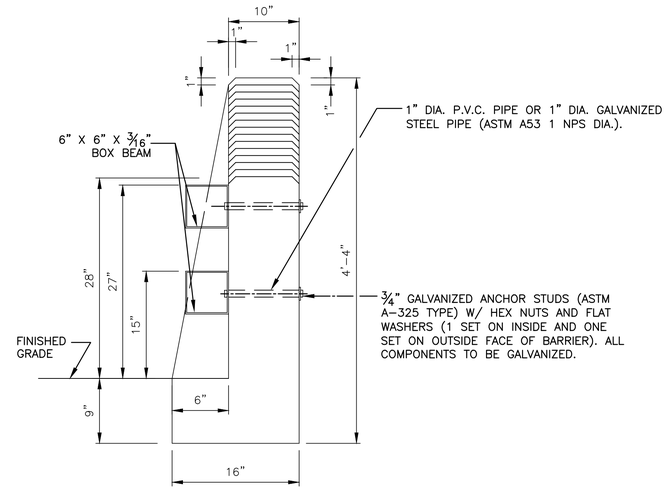

SECTION B–B
N.T.S.

NOTES:

1. THE MOWING STRIP, WHEN SPECIFIED, SHOULD BE A MINIMUM OF 3" THICK. THE MATERIAL AND THICKNESS OF EACH LIFT SHOULD MATCH THAT IN THE ADJOINING STABILIZED SHOULDER REFER TO DRAWING T0300.41 FOR DETAILS.
2. THE CONCRETE TRANSITION PIECE SHALL BE BACKED UP WITH EARTH OR BACKUP POSTS. SEE DETAILS ON THE TRANSITION BETWEEN BOX BEAM GUIDE RAIL AND SINGLE SLOPE HALF SECTION CONCRETE BARRIER (TD300.37 SHEET 3 OF 3).
3. FOR DETAILS SEE TRANSITION BETWEEN BOX BEAM GUIDE RAIL AND SINGLE SLOPE HALF SECTION CONCRETE BARRIER (TD300.36 SHEET 2 OF 3).
4. SEE SPLICE DETAILS ON THE BOX BEAM GUIDE RAIL DRAWING TD300.12.
5. FOR MATERIAL REQUIREMENTS AND CONSTRUCTION DETAILS FOR RAILING IN THE TRANSITION ZONE, SEE SPECIFICATIONS FOR GUIDE RAILING BARRIER.
6. ALL STEEL THAT IS SPECIFIED TO BE GALVANIZED SHALL BE GALVANIZED IN ACCORDANCE WITH STANDARD SPECIFICATIONS. ALL AREAS WHERE THE ZINC COATING IS DAMAGED DURING INSTALLATION, INCLUDING FIELD DRILLING HOLES, SHALL BE REPAIRED.

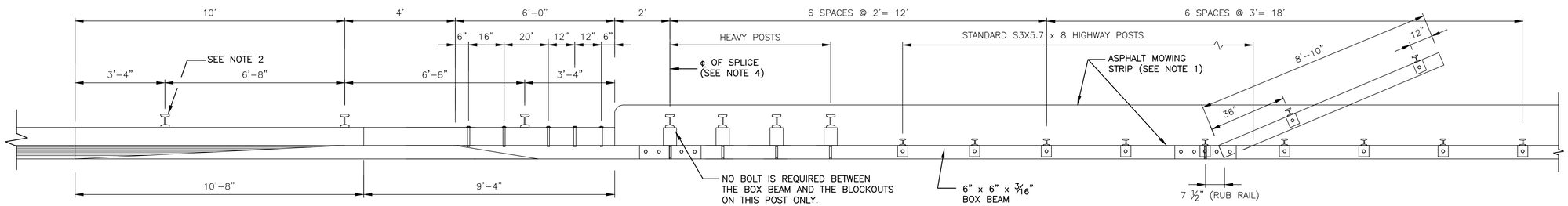

PLAN
N.T.S.

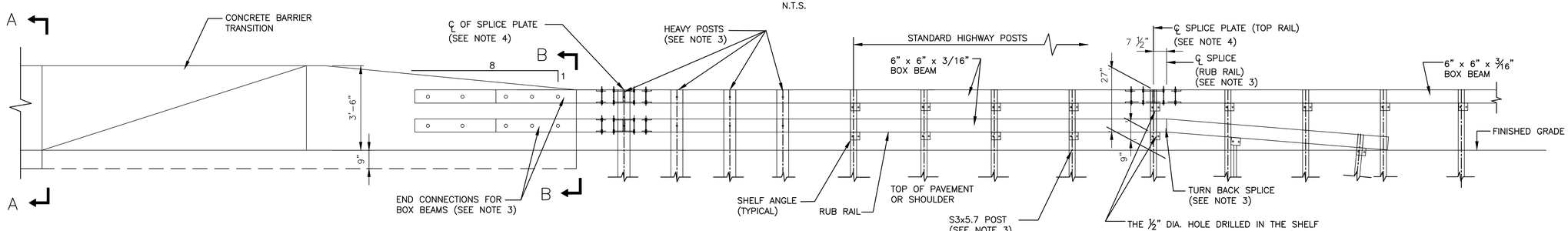

ELEVATION
N.T.S.

Sheet of

THE PORT AUTHORITY OF NY & NJ

CHIEF

No.	Date	Revision	Approved

ENGINEERING DEPARTMENT

PANYNJ Traffic Standard Details

TRAFFIC

Title

GUIDE RAIL DETAILS

TRANSITION BETWEEN BOX BEAM GUIDE RAIL AND SINGLE SLOPE HALF SECTION CONCRETE BARRIER (SHEET 1 OF 3)

This drawing subject to conditions in contract. All inventions, ideas, designs and methods herein are reserved to Port Authority and may not be used without its written consent.
All recipients of Contract documents, including bidders and those who do not bid and their prospective subcontractors and suppliers who may receive all or a part of the Contract documents or copies thereof, shall make every effort to ensure the secure and appropriate disposal of the Contract documents to prevent further disclosure of the information contained in the documents. Secure and appropriate disposal includes methods of document destruction such as shredding or arrangements with refuse handlers that ensure that third persons will not have access to the documents' contents either before, during, or after disposal. Documents may also be returned for disposal purposes to the Contract Desk on the 3rd Floor, 3 Gateway Center, Newark NJ 07102 or the office of the Director of Procurement, One Madison Avenue, 7th Floor, New York NY 10010.
It is a violation of law for any person to alter a document in any way, unless acting under the direction of a licensed professional engineer or registered architect. If this document bearing the seal of an engineer/architect is altered, the altering engineer/architect shall affix to the document their seal and the notation "altered by" followed by their signature and the date of such alteration, and a specific description of the alteration.

Designed by Drawn by Checked by

Date **03/14/2014**

Contract Number

Drawing Number **TD300.35**

PID#

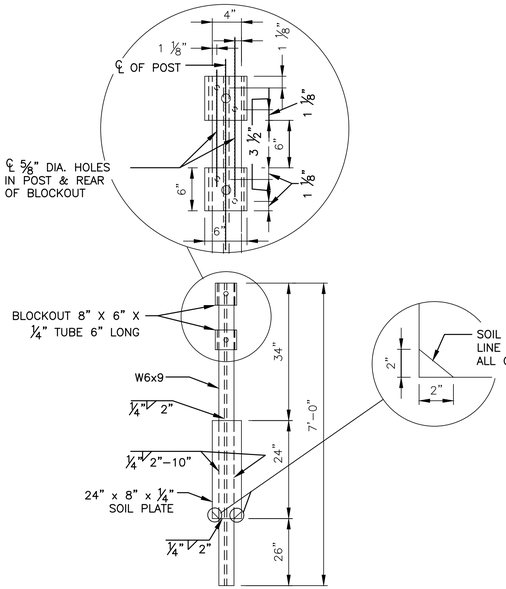

HEAVY POST DETAIL
N.T.S.

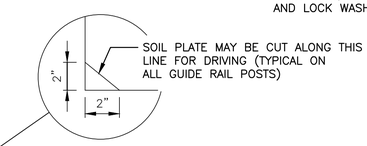

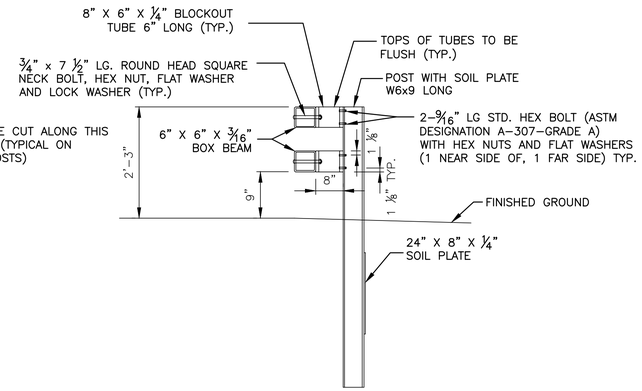

HEAVY POST ELEVATION
N.T.S.

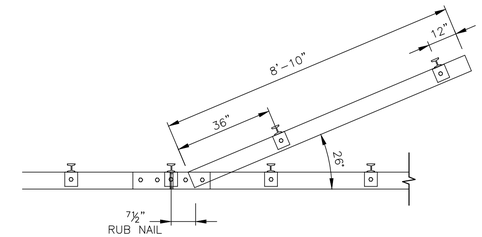

PLAN – RUB RAIL TURNBACK
N.T.S.

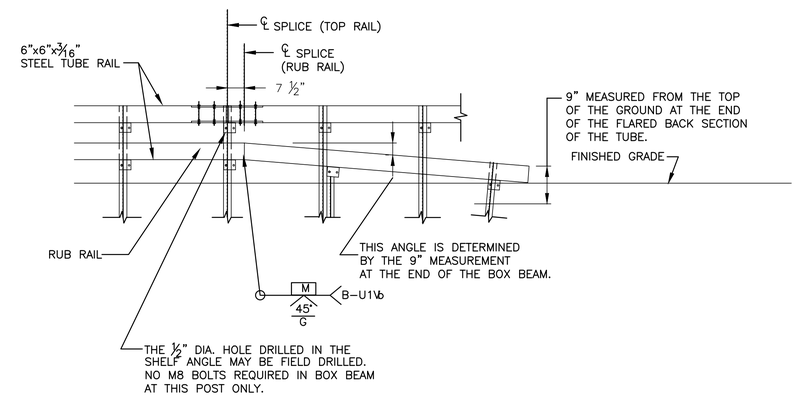

ELEVATION – RUB RAIL TURNBACK
N.T.S.

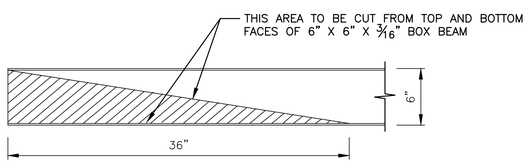

CUT DETAIL – END CONNECTION
N.T.S.

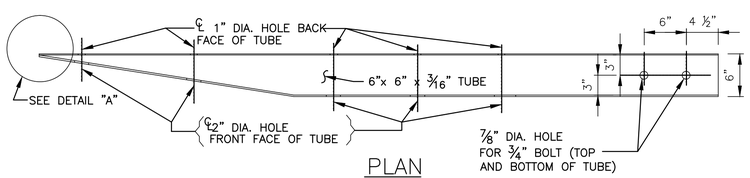

PLAN
N.T.S.

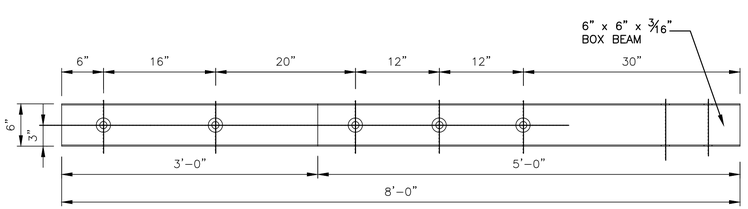

ELEVATION
N.T.S.

END CONNECTION FOR BOX BEAM GUIDE RAIL
N.T.S.

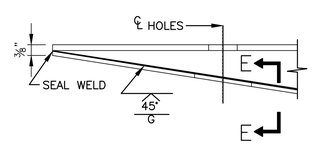

DETAIL "A"
N.T.S.

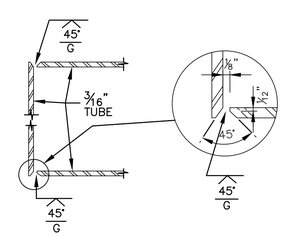

SECTION E–E
N.T.S.

NOTE:
FOR ADDITIONAL DETAILS SEE DRAWING TD300.19

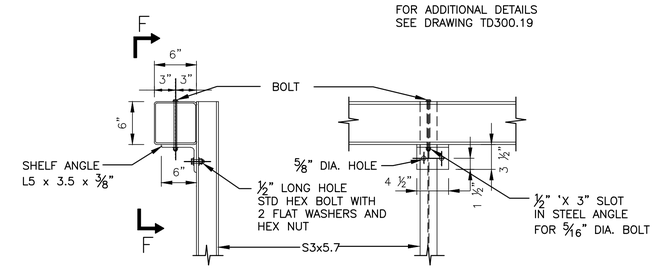

ELEVATION VIEW F–F

TYPICAL RAIL TO POST CONNECTION
N.T.S.

Sheet of

THE PORT AUTHORITY OF NY & NJ

CHIEF

No.	Date	Revision	Approved

ENGINEERING DEPARTMENT

PANYNJ Traffic Standard Details

TRAFFIC

Title
GUIDE RAIL DETAILS

TRANSITION BETWEEN BOX BEAM GUIDE RAIL AND SINGLE SLOPE HALF SECTION CONCRETE BARRIER (SHEET 2 OF 3)

This drawing subject to conditions in contract. All inventions, ideas, designs and methods herein are reserved to Port Authority and may not be used without its written consent.
All recipients of Contract documents, including bidders and those who do not bid and their prospective subcontractors and suppliers who may receive all or a part of the Contract documents or copies thereof, shall make every effort to ensure the secure and appropriate disposal of the Contract documents to prevent further disclosure of the information contained in the documents. Secure and appropriate disposal includes methods of document destruction such as shredding or arrangements with refuse handlers that ensure that third persons will not have access to the documents' contents either before, during, or after disposal. Documents may also be returned for disposal purposes to the Contract Desk on the 3rd Floor, 3 Gateway Center, Newark NJ 07102 or the office of the Director of Procurement, One Madison Avenue, 7th Floor, New York NY 10010.
It is a violation of law for any person to alter a document in any way, unless acting under the direction of a licensed professional engineer or registered architect. If this document bearing the seal of an engineer/architect is altered, the altering engineer/architect shall affix to the document their seal and the notation "altered by" followed by their signature and the date of such alteration, and a specific description of the alteration.

Designed by Drawn by Checked by

Date **03/14/2014**

Contract Number

Drawing Number **TD300.36**

PID#

NOTES:

1. SURFACE SHALL BE SMOOTH.
2. UNLESS INDICATED OTHERWISE, MATERIALS AND CONSTRUCTION DETAILS SHOULD CONFORM AND/OR BE PERFORMED IN ACCORDANCE WITH CURRENT PORT AUTHORITY, NYSDOT AND/OR NJDOT SPECIFICATION FOR SUCH ITEM. PRIOR APPROVAL WITH THE PORT AUTHORITY ENGINEER IS REQUIRED.
3. THE BEND MAY BE ELIMINATED PROVIDED 2" MIN. COVER IS MAINTAINED.
4. CONTINUITY CONNECTIONS SHALL BE USED AT ALL JOINTS IN PRECAST AND CAST-IN-PLACE SINGLE SLOPE CONCRETE HALF SECTION BARRIER. ALL HARDWARE IN CONTINUITY CONNECTIONS SHALL BE GALVANIZED.
5. PRECAST AND CAST-IN-PLACE SINGLE SLOPE CONCRETE HALF SECTION BARRIER SHALL BE BACKED UP WITH EARTH OR BACK UP POSTS FOR ITS ENTIRE LENGTH AS SHOWN ON THE BACKUP POST LAYOUT.
6. IF THE 6SM4 BAR IS USED, THEN THIS 4SM4 BAR NEED NOT BE USED.

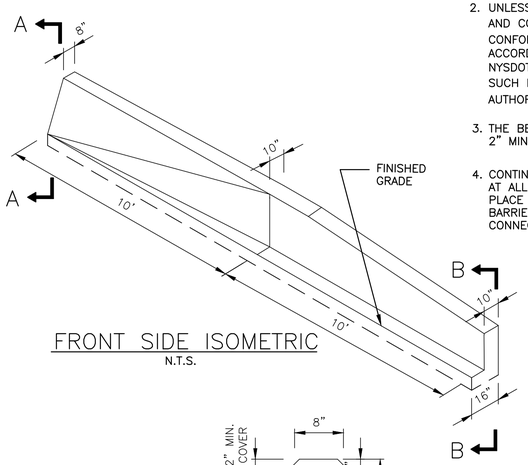

FRONT SIDE ISOMETRIC
N.T.S.

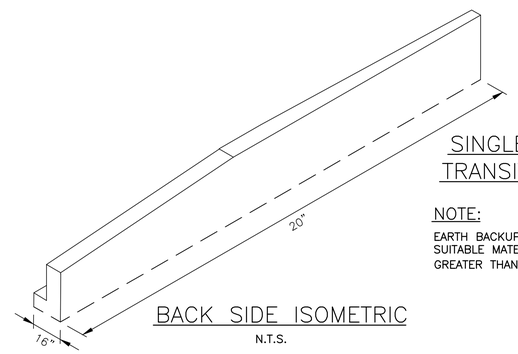

BACK SIDE ISOMETRIC
N.T.S.

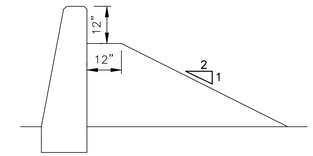

SINGLE SLOPE CONCRETE HALF SECTION TRANSITION BARRIER WITH EARTH BACKUP
(SEE NOTES)

NOTE:

EARTH BACKUP SHALL CONSIST OF FULLY COMPACTED SUITABLE MATERIAL HAVING NO PARTICLES GREATER GREATER THAN 1 ½" INCLUDED

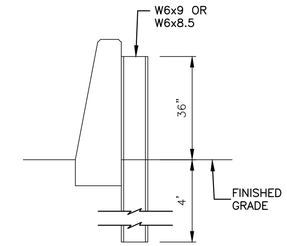

SINGLE SLOPE CONCRETE HALF SECTION TRANSITION BARRIER WITH BACKUP POST
(SEE NOTES)

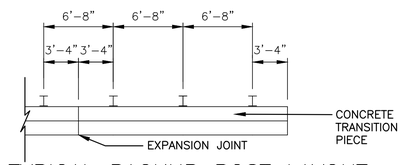

TYPICAL BACKUP POST LAYOUT
N.T.S.

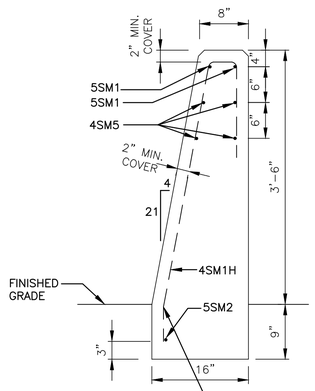

SECTION A-A

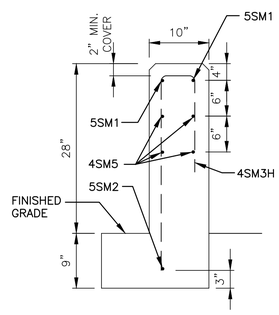

SECTION B-B

BAR LIST **											
MARK	SIZE	NO.	LENGTH	USE	A	B	C	D	H	K	LOCATION
4SM1H	4	4	5'-6"	STIRRUP	10"	3'-10"	1 ½"	4 ¼"	—	—	AT CONCRETE BARRIER END
4SM2H	4	1	5'-7"	STIRRUP	10"	3'-10"	1 ½"	5 ½"	—	—	AT 33" FROM THE MIDPOINT OF THE BARRIER UNIT
4SM3H	4	4	VARIES FROM 4'-6" TO 4'-8"	STIRRUP	6"	VARIES FROM 32" TO 35"	1 ½"	16"	—	—	AT BOX BEAM END
4SM4	4	2	4'-10"	STIRRUP	*	*	*	*	—	—	2 AT EXPANSION JOINT SIDE
4SM5	4	8	30"	STRAIGHT	—	—	—	—	—	—	4 AT EACH END
4SM6H	4	1	5'-5"	STIRRUP	6"	3'-7"	1 ½"	16"	—	—	AT 33" FROM THE MIDPOINT OF THE BARRIER UNIT
5SM1	5	2	19'-9"	STRINGER	—	10'-6"	—	—	14"	9'-2"	LONGITUDINAL 2 IN TOP
6SM4	6	2	4'-10"	STIRRUP	*	*	*	*	—	—	SEE DETAIL OF SM4 BAR

* SEE DETAIL OF 4SM4 BAR
** BARS ARE TO BE EPOXY COATED

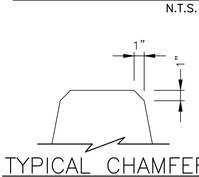

TYPICAL CHAMFER DETAIL

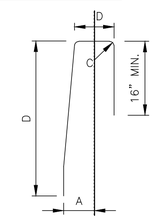

4SM1H AND 4SM2H

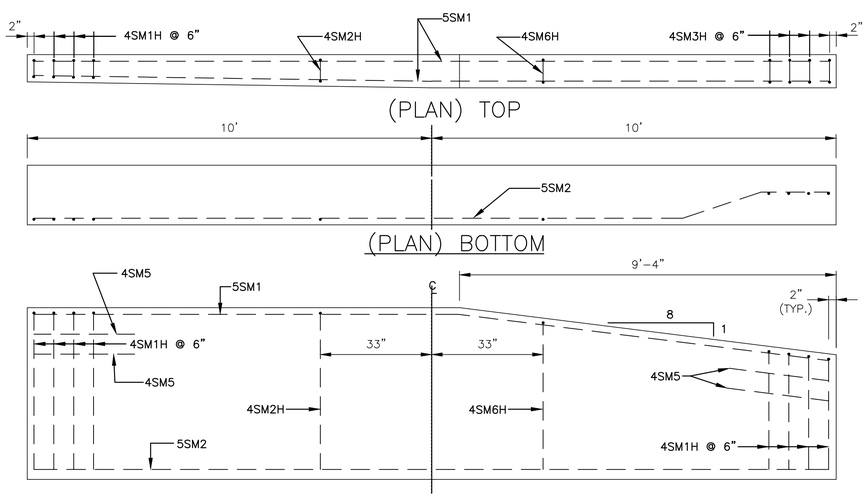

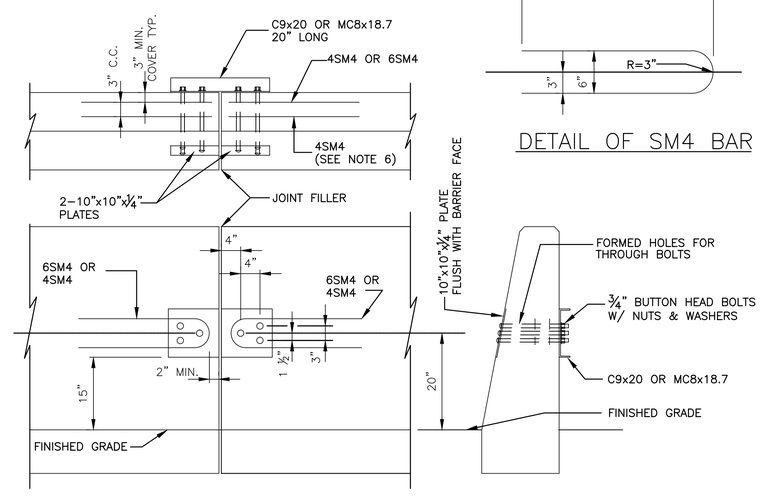

CONTINUITY CONNECTION FOR HALF SECTION SINGLE SLOPE BARRIER
(SEE NOTE 4)
N.T.S.

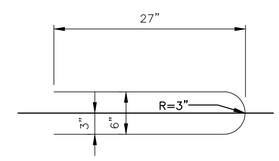

DETAIL OF SM4 BAR

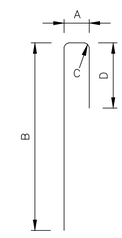

4SM3H AND 4SM6H

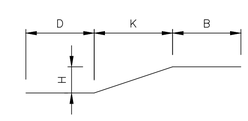

5SM1 AND 5SM2

Sheet of

THE PORT AUTHORITY OF NY & NJ

CHIEF

No.	Date	Revision	Approved

ENGINEERING DEPARTMENT

PANYNJ Traffic Standard Details

TRAFFIC

Title

GUIDE RAIL DETAILS

TRANSITION BETWEEN BOX BEAM GUIDE RAIL AND SINGLE SLOPE HALF SECTION CONCRETE BARRIER (SHEET 3 OF 3)

This drawing subject to conditions in contract. All inventions, ideas, designs and methods herein are reserved to Port Authority and may not be used without its written consent.
All recipients of Contract documents, including bidders and those who do not bid and their prospective subcontractors and suppliers who may receive all or a part of the Contract documents or copies thereof, shall make every effort to ensure the secure and appropriate disposal of the Contract documents to prevent further disclosure of the information contained in the documents. Secure and appropriate disposal includes methods of document destruction such as shredding or arrangements with refuse handlers that ensure that third persons will not have access to the documents' contents either before, during, or after disposal. Documents may also be returned for disposal purposes to the Contract Desk on the 3rd Floor, 3 Gateway Center, Newark NJ 07102 or the office of the Director of Procurement, One Madison Avenue, 7th Floor, New York NY 10010.
It is a violation of law for any person to alter a document in any way, unless acting under the direction of a licensed professional engineer or registered architect. If this document bearing the seal of an engineer/architect is altered, the altering engineer/architect shall affix to the document their seal and the notation "altered by" followed by their signature and the date of such alteration, and a specific description of the alteration.

Designed by Drawn by Checked by

Date **03/14/2014**

Contract Number

Drawing Number **TD300.37**

PID#

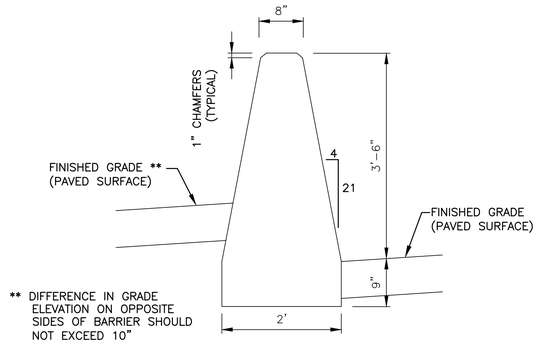

SECTION A–A

N.T.S.

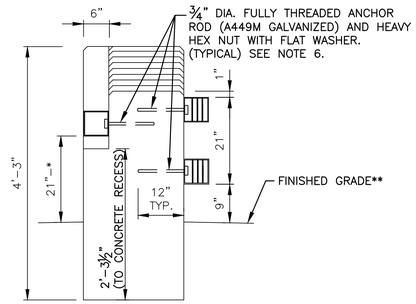

NOTES:

* THE DIMENSIONS SHOWN ARE FROM TOP OF FINISHED GRADE TO BOTTOM OF RAIL.

** THE FINISHED GRADE CAN DIFFER BY UP TO 10" FROM ONE SIDE OF THE BARRIER TO THE OTHER.

SECTION B–B

N.T.S.

NOTES:

1. THE ELEVATION OF FINISHED GRADES ON EACH SIDE OF THE TRANSITION WILL VARY IN RELATION TO EACH OTHER AND IN RELATION TO THE BARRIER BASED ON ROADWAY GEOMETRY.
2. SEE DRAWING TD300.14 FOR BOX BEAM TYPE I END ASSEMBLY DETAILS.
3. FOR DETAILS SEE TRANSITION OF BOX BEAM MEDIAN BARRIER TO SINGLE SLOPE CONCRETE MEDIAN BARRIER (TD300.39 SHEET 2 OF 3) AND (TD300.40 SHEET 3 OF 3) STANDARD SHEETS.
4. SEE SPLICE DETAILS ON DRAWING TD300.13.
5. FOR MATERIAL REQUIREMENTS AND CONSTRUCTION DETAILS FOR RAILING IN THE TRANSITION ZONE, SEE SPECIFICATIONS FOR BOX BEAM GUIDE RAILING.
6. DRILLING & GROUTING OF THREADED ANCHOR RODS IS TO BE INCLUDED IN THE PRICE BID FOR THE TRANSITION ITEM. SEE SPECIFICATIONS FOR DRILLING AND GROUTING IN SECTION 586 OF THE N.Y.S. STANDARD SPECIFICATIONS. MINIMUM EMBEDMENT OF ANCHOR RODS SHALL BE 12" AND A MINIMUM EDGE DISTANCE OF 3" SHALL BE MAINTAINED.
7. IF THE 3" MINIMUM COVER REQUIREMENT CAN NOT BE OBTAINED, THIS ANCHOR ROD CAN BE ELIMINATED.
8. ALL STEEL THAT IS SPECIFIED TO BE GALVANIZED SHALL BE GALVANIZED IN ACCORDANCE WITH STANDARD SPECIFICATIONS. ALL AREAS WHERE THE ZINC COATING IS DAMAGED DURING INSTALLATION, INCLUDING FIELD DRILLING HOLES, SHALL BE REPAIRED.
9. THE MOWING STRIP, WHEN SPECIFIED, SHOULD BE A MINIMUM OF 3" THICK. IF THERE IS AN ADJOINING STABILIZED SHOULDER, THE MATERIAL AND THICKNESS SHOULD MATCH THAT IN THE ADJOINING STABILIZED SHOULDER ITEM. SEE DRAWING TD300.41.

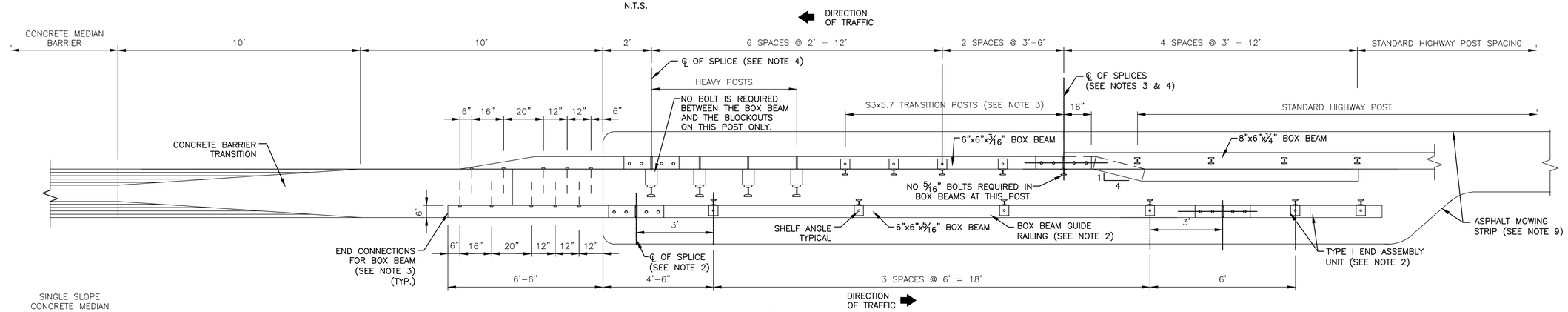

PLAN

N.T.S.

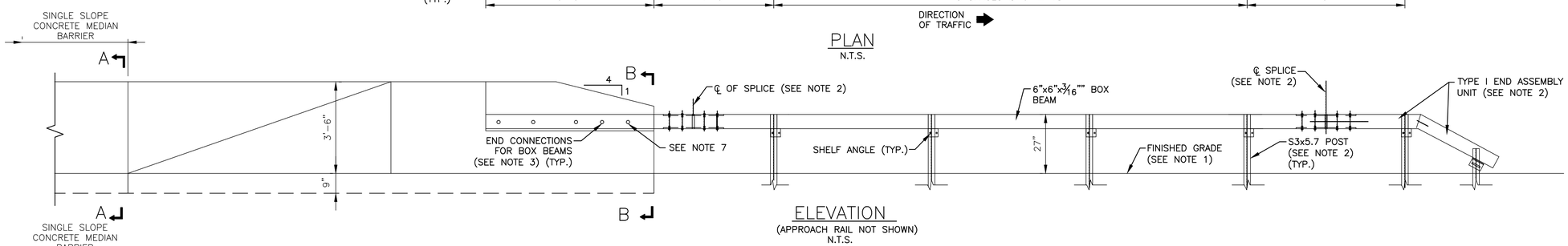

ELEVATION

(APPROACH RAIL NOT SHOWN)

N.T.S.

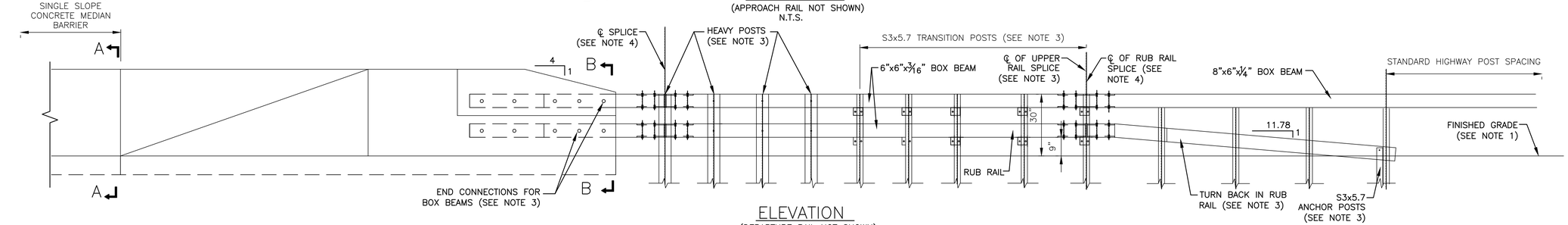

ELEVATION

(DEPARTURE RAIL NOT SHOWN)

N.T.S.

Sheet of

THE PORT AUTHORITY OF NY & NJ

CHIEF

No.	Date	Revision	Approved

ENGINEERING DEPARTMENT

PANYNJ Traffic Standard Details

TRAFFIC

Title

GUIDE RAIL DETAILS

TRANSITION BETWEEN BOX BEAM MEDIAN BARRIER AND SINGLE SLOPE CONCRETE MEDIAN BARRIER (SHEET 1 OF 3)

This drawing subject to conditions in contract. All inventions, ideas, designs and methods herein are reserved to Port Authority and may not be used without its written consent.
All recipients of Contract documents, including bidders and those who do not bid and their prospective subcontractors and suppliers who may receive all or a part of the Contract documents or copies thereof, shall make every effort to ensure the secure and appropriate disposal of the Contract documents to prevent further disclosure of the information contained in the documents. Secure and appropriate disposal includes methods of document destruction such as shredding or arrangements with refuse handlers that ensure that third persons will not have access to the documents' contents either before, during, or after disposal. Documents may also be returned for disposal purposes to the Contract Desk on the 3rd Floor, 3 Gateway Center, Newark NJ 07102 or the office of the Director of Procurement, One Madison Avenue, 7th Floor, New York NY 10010.
It is a violation of law for any person to alter a document in any way, unless acting under the direction of a licensed professional engineer or registered architect. If this document bearing the seal of an engineer/architect is altered, the altering engineer/architect shall affix to the document their seal and the notation "altered by" followed by their signature and the date of such alteration, and a specific description of the alteration.

Designed by | Drawn by | Checked by

Date **03/14/2014**

Contract Number

Drawing Number **TD300.38**

PID#

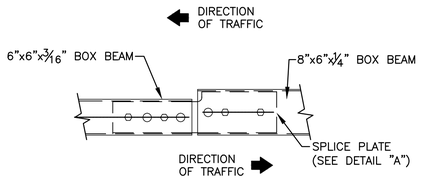

PLAN
N.T.S.

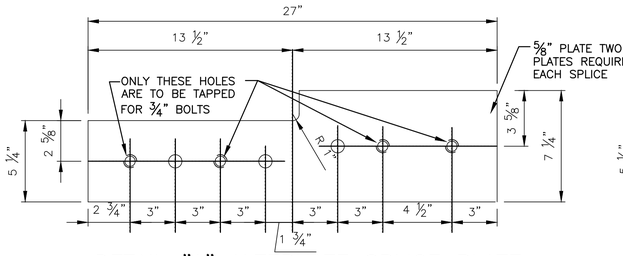

DETAIL "A" ALTERNATE SPLICE PLATE
SHOWING TAPPED BOLT HOLES
N.T.S.

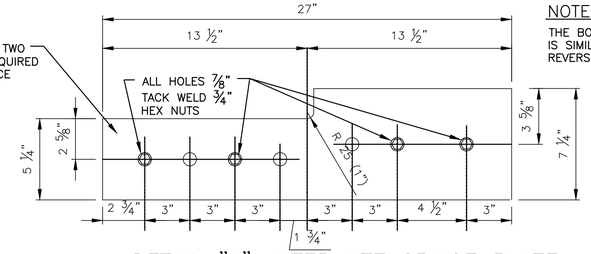

NOTE:
THE BOTTOM PLATE IS SHOWN. THE TOP PLATE IS SIMILAR WITH THE NUTS WELDED ON THE REVERSE SIDE.

DETAIL "A" ALTERNATE SPLICE PLATE
SHOWING 3/4" HEX NUTS WELDED TO PLATE
N.T.S.

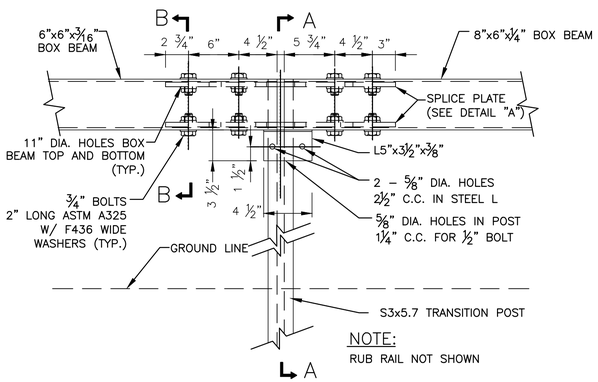

NOTE:
RUB RAIL NOT SHOWN

ELEVATION TRANSITION SPLICE
N.T.S.

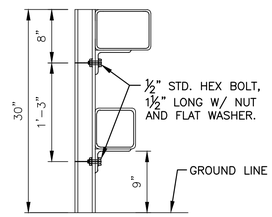

NOTE:
FOR RUB RAIL TURN BACK SPLICE DETAILS SEE THIS SHEET.

SECTION A–A
N.T.S.

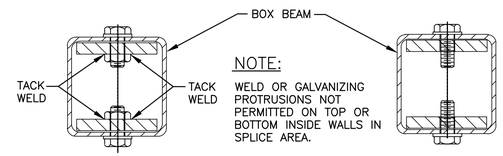

NOTE:
WELD OR GALVANIZING PROTRUSIONS NOT PERMITTED ON TOP OR BOTTOM INSIDE WALLS IN SPLICE AREA.

SECTION B–B
(SPLICE PLATE SHOWING 3/4" HEX NUTS WELDED TO PLATE)
N.T.S.

SECTION B–B
(SPLICE PLATE SHOWING TAPPED BOLT HOLES)
N.T.S.

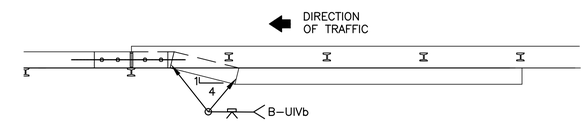

PLAN – RUB RAIL TURNBACK
N.T.S.

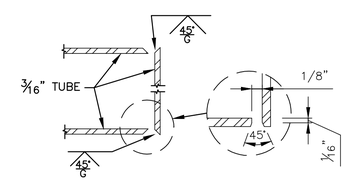

SECTION C–C
N.T.S.

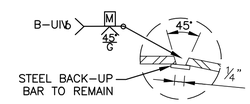

WELD DETAIL
FOR RUB RAIL
N.T.S.

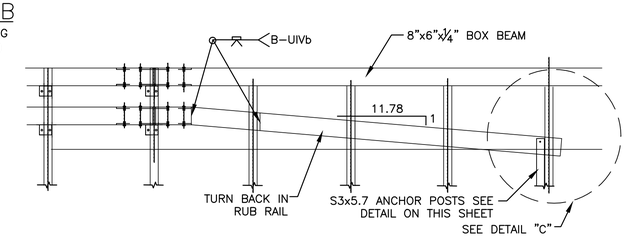

ELEVATION – RUB RAIL TURNBACK
N.T.S.

NOTE "A":
THE END CONNECTION ON THE DEPARTURE SIDE OF TRAFFIC WILL BE SIMILAR BUT WILL NOT HAVE THE CUT DETAIL (I.E. IT WILL MAINTAIN ITS SQUARE SHAPE THROUGHOUT).

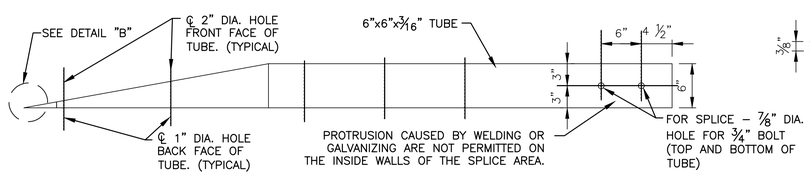

PLAN

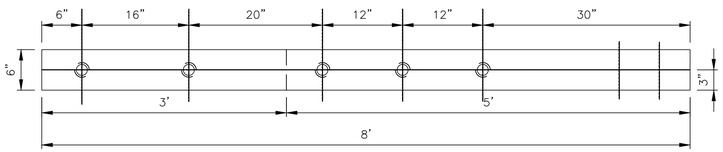

ELEVATION

END CONNECTION FOR BOX BEAM GUIDE RAIL
(SEE NOTE "A")
N.T.S.

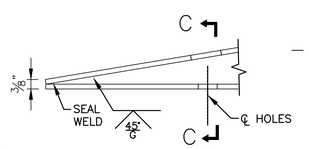

DETAIL "B"
(APPROACH SIDE ONLY)
N.T.S.

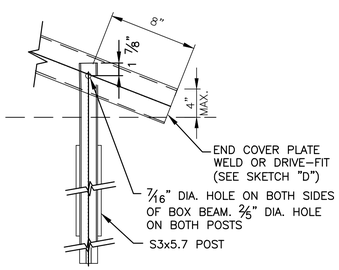

DETAIL "C"
N.T.S.

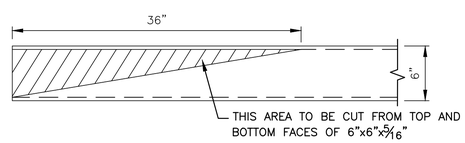

CUT DETAIL – END CONNECTION
(APPROACH SIDE ONLY)
N.T.S.

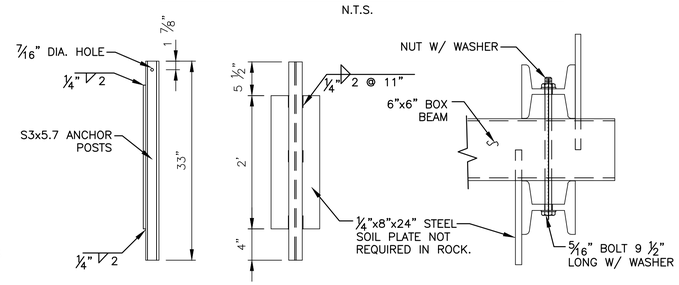

ANCHOR POST DETAIL
N.T.S.

PLAN
N.T.S.

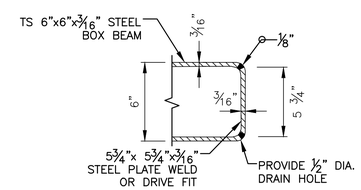

SKETCH "D" BOX BEAM
END COVER PLATE
N.T.S.

Sheet of

THE PORT AUTHORITY OF NY & NJ

CHIEF

No.	Date	Revision	Approved

ENGINEERING DEPARTMENT

PANYNJ
Traffic Standard Details

TRAFFIC

Title
GUIDE RAIL DETAILS

TRANSITION BETWEEN BOX BEAM MEDIAN BARRIER AND SINGLE SLOPE CONCRETE MEDIAN BARRIER (SHEET 2 OF 3)

This drawing subject to conditions in contract. All inventions, ideas, designs and methods herein are reserved to Port Authority and may not be used without its written consent.
All recipients of Contract documents, including bidders and those who do not bid and their prospective subcontractors and suppliers who may receive all or a part of the Contract documents or copies thereof, shall make every effort to ensure the secure and appropriate disposal of the Contract documents to prevent further disclosure of the information contained in the documents. Secure and appropriate disposal includes methods of document destruction such as shredding or arrangements with refuse handlers that ensure that third persons will not have access to the documents' contents either before, during, or after disposal. Documents may also be returned for disposal purposes to the Contract Desk on the 3rd Floor, 3 Gateway Center, Newark NJ 07102 or the office of the Director of Procurement, One Madison Avenue, 7th Floor, New York NY 10010.
It is a violation of law for any person to alter a document in any way, unless acting under the direction of a licensed professional engineer or registered architect. If this document bearing the seal of an engineer/architect is altered, the altering engineer/architect shall affix to the document their seal and the notation "altered by" followed by their signature and the date of such alteration, and a specific description of the alteration.

Designed by	Drawn by	Checked by

Date **03/14/2014**

Contract Number

Drawing Number **TD300.39**

PID#

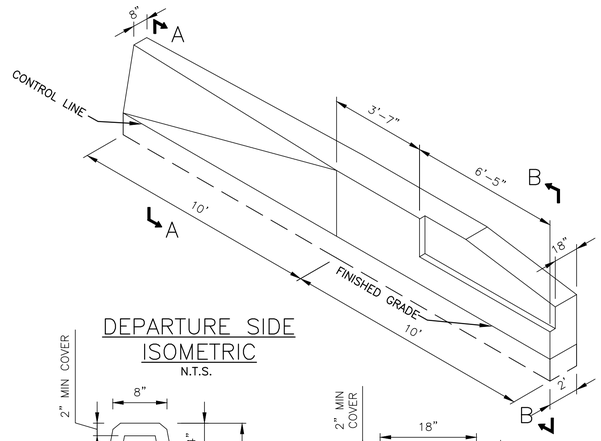

DEPARTURE SIDE ISOMETRIC
N.T.S.

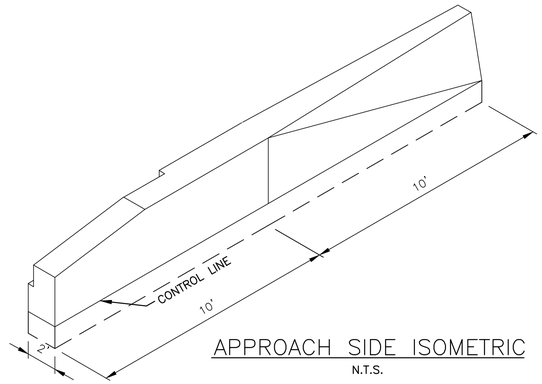

APPROACH SIDE ISOMETRIC
N.T.S.

NOTES:

1. SURFACE SHALL BE SMOOTH.
2. UNLESS INDICATED OTHERWISE, MATERIALS AND CONSTRUCTION DETAILS SHOULD CONFORM AND/OR BE PERFORMED IN ACCORDANCE WITH CURRENT PORT AUTHORITY, NYSDOT AND/OR NJDOT SPECIFICATION FOR SUCH ITEM. PRIOR APPROVAL WITH THE PORT AUTHORITY ENGINEER IS REQUIRED.
3. THE BEND MAY BE ELIMINATED PROVIDED 2" MIN. COVER IS MAINTAINED. ALL DIMENSIONS ARE IN MILLIMETERS UNLESS OTHERWISE NOTED.

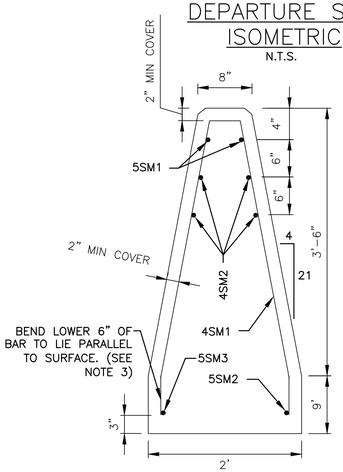

SECTION A–A
N.T.S.

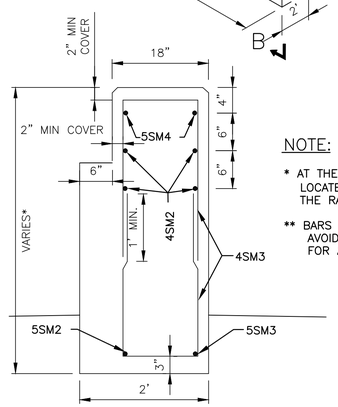

SECTION B–B
N.T.S.

NOTE:

* AT THE BARRIER END, THE TOP WILL BE LOCATED 1" ABOVE THE TOP OF THE RAIL TUBE ON THE APPROACH SIDE.

** BARS CAN BE ADJUSTED VERTICALLY TO AVOID BEING HIT BY THE DRILLED HOLES FOR ANCHOR BOLTS.

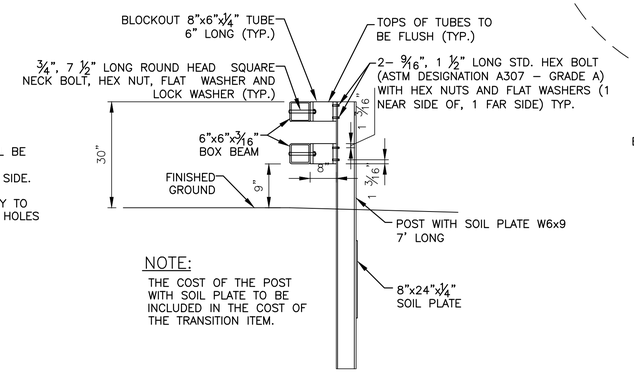

NOTE:

THE COST OF THE POST WITH SOIL PLATE TO BE INCLUDED IN THE COST OF THE TRANSITION ITEM.

HEAVY POST ELEVATION
N.T.S.

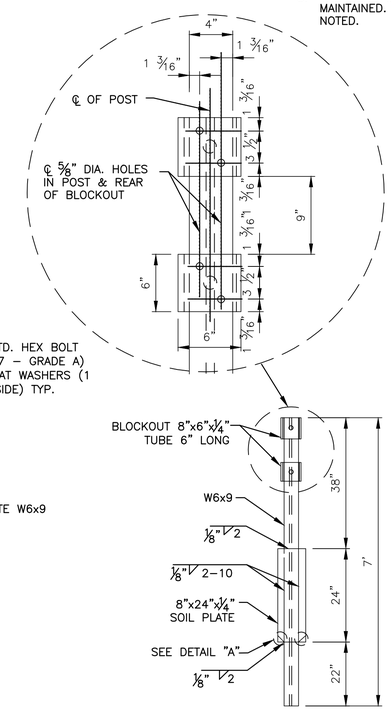

HEAVY POST DETAIL
N.T.S.

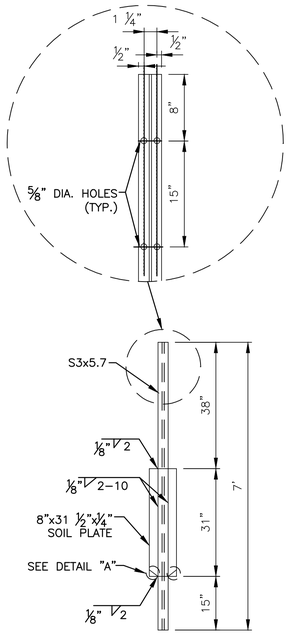

*TRANSITION POST DETAIL
N.T.S.

* FOR CONNECTION OF RAIL TO POST SEE THE BOX BEAM GUIDERAIL STANDARD SHEET

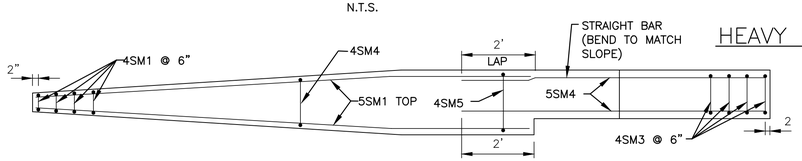

PLAN (TOP)
N.T.S.

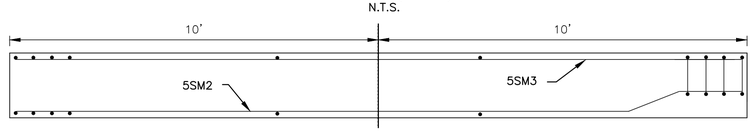

PLAN (BOTTOM)
N.T.S.

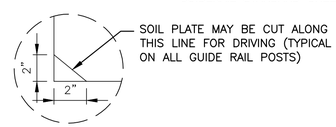

DETAIL "A"
N.T.S.

BAR LIST											
MARK	SIZE	NO.	LENGTH	USE	A	B	C	D	H	K	LOCATION
4SM1	4	4	VARIES	STIRRUP	10"	3'–10"	1½"	VARIES FROM 4½" TO 6⅘"	—	—	AT CONCRETE BARRIER END
4SM2	4	8	30"	STRAIGHT	—	—	—	—	—	—	4 AT EACH END OF BARRIER
4SM3	4	8	6'	STIRRUP	14"	29"	1½"	—	—	—	AT BOXBEAM END
4SM4	4	1	9'	STIRRUP	10"	3'–10"	1½"	16"	—	—	AT 33" FROM THE MIDPOINT OF THE BARRIER UNIT.
4SM5	4	1	9'–4"	STIRRUP	20"	3'–10"	1½"	—	—	—	AT 33" FROM THE MIDPOINT OF THE BARRIER UNIT.
5SM1	5	2	13'–4"	STRINGER	—	9'–10"	—	—	2⅞"	3'–5"	LONGITUDINAL 2 IN TOP
5SM2	5	1	20'–3"	STRINGER	—	1'–10"	—	16'–4"	6"	18¼"	LONGITUDINAL 1 IN BOTTOM
5SM3	5	1	20'	STRINGER	—	—	—	—	—	—	LONGITUDINAL 1 IN BOTTOM
5SM4	5	2	8'–8"	STRINGER	—	—	—	—	—	—	LONGITUDINAL 2 IN TOP

NOTE: BARS ARE TO BE EPOXY COATED

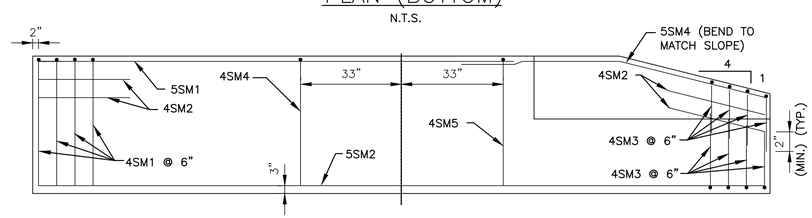

ELEVATION
N.T.S.

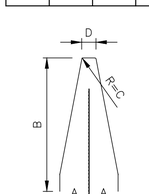

4SM1 & 4SM4

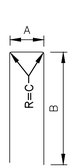

4SM3 & 4SM5

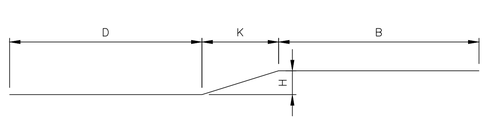

5SM1 & 5SM2

Sheet of

THE PORT AUTHORITY OF NY & NJ

CHIEF

No.	Date	Revision	Approved

ENGINEERING DEPARTMENT

PANYNJ Traffic Standard Details

TRAFFIC

Title

GUIDE RAIL DETAILS

TRANSITION BETWEEN BOX BEAM MEDIAN BARRIER AND SINGLE SLOPE CONCRETE MEDIAN BARRIER (SHEET 3 OF 3)

This drawing subject to conditions in contract. All inventions, ideas, designs and methods herein are reserved to Port Authority and may not be used without its written consent.
All recipients of Contract documents, including bidders and those who do not bid and their prospective subcontractors and suppliers who may receive all or a part of the Contract documents or copies thereof, shall make every effort to ensure the secure and appropriate disposal of the Contract documents to prevent further disclosure of the information contained in the documents. Secure and appropriate disposal includes methods of document destruction such as shredding or arrangements with refuse handlers that ensure that third persons will not have access to the documents' contents either before, during, or after disposal. Documents may also be returned for disposal purposes to the Contract Desk on the 3rd Floor, 3 Gateway Center, Newark NJ 07102 or the office of the Director of Procurement, One Madison Avenue, 7th Floor, New York NY 10010.
It is a violation of law for any person to alter a document in any way, unless acting under the direction of a licensed professional engineer or registered architect. If this document bearing the seal of an engineer/architect is altered, the altering engineer/architect shall affix to the document their seal and the notation "altered by" followed by their signature and the date of such alteration, and a specific description of the alteration.

Designed by	Drawn by	Checked by

Date **03/14/2014**

Contract Number

Drawing Number **TD300.40**

PID#

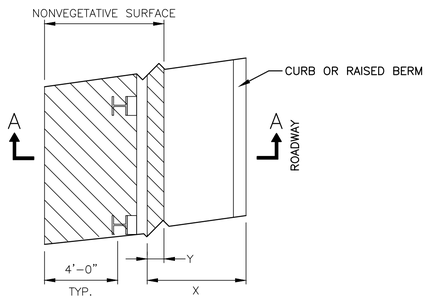

PLAN VIEW
N.T.S.

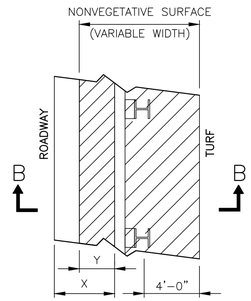

PLAN VIEW
N.T.S.

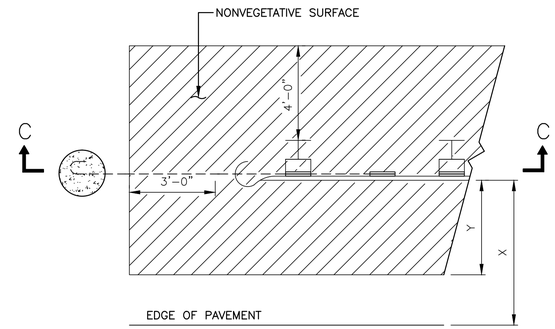

PLAN VIEW
N.T.S.

NOTES:

1. IF THE END OF THE GUIDE RAIL IS BURIED IN THE SLOPE, THE LIMIT OF NONVEGETATIVE SURFACE RELATIVE TO THE BURIED GUIDE RAIL WILL BE DETERMINED BY THE RESIDENT ENGINEER.
2. SEE TYPICAL SECTIONS FOR CROSS SLOPES IN ROADSIDE (BORDER OR SIDEWALK AREA).

X	Y
GUIDE RAIL OFFSET FROM EDGE OF PAVEMENT	WIDTH OF NONVEGETATIVE SURFACE IN FRONT OF GUIDE RAIL
7'–0" OR GREATER 4'–0" 0'–0"	2'–0" 4'–0" 0'–0"

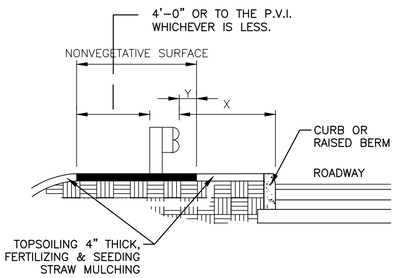

SECTION A–A
N.T.S.

NONVEGETATIVE SURFACES AROUND GUIDE RAIL BEHIND CURB OR RAISED BERM

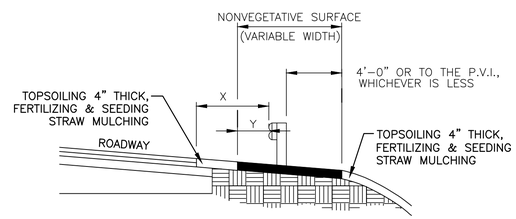

SECTION B–B
N.T.S.

NONVEGETATIVE SURFACE AT EDGE OF PAVEMENT ON UMBRELLA SECTION WHERE GUIDE RAIL IS USED

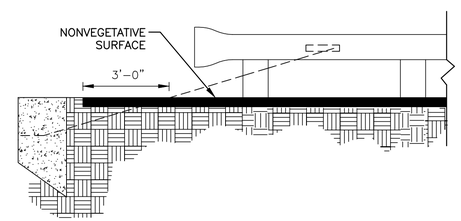

SECTION C–C
N.T.S.

NONVEGETATIVE SURFACES AROUND GUIDE RAIL ANCHORAGE TYPE I

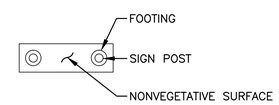

THE NONVEGETATIVE SURFACE SHALL FORM A RECTANGULAR PAD WHOSE OUTSIDE LIMITS EXTEND A MINIMUM OF 3' –0" BEYOND THE POST FOOTING.

PLAN VIEW
N.T.S.

NONVEGETATIVE SURFACE AROUND OVERHEAD SIGN FOUNDATIONS AND UNDER LARGE GROUND MOUNTED SIGNS

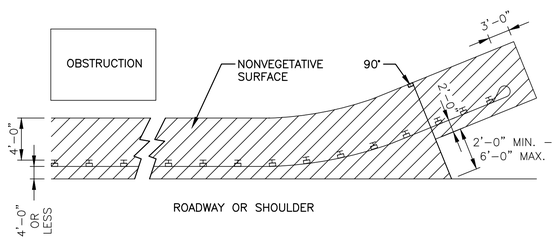

PLAN VIEW
N.T.S.

NONVEGETATIVE SURFACE AROUND FLARED GUIDE RAIL WHERE GUIDE RAIL OFFSET FROM EDGE OF PAVEMENT IS 4'–0" OR LESS

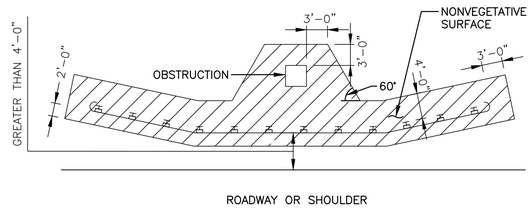

PLAN VIEW
N.T.S.

NONVEGETATIVE SURFACE AROUND FLARED GUIDE RAIL WHERE GUIDE RAIL OFFSET FROM EDGE OF PAVEMENT IS GREATER THAN 4'–0"

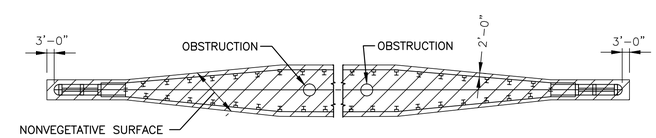

PLAN VIEW
N.T.S.

NONVEGETATIVE SURFACE AT MEDIAN GUIDE RAIL

Sheet of

THE PORT AUTHORITY
OF NY & NJ

CHIEF

No.	Date	Revision	Approved

ENGINEERING DEPARTMENT

PANYNJ
Traffic Standard
Details

TRAFFIC

Title
GUIDE RAIL DETAILS

NONVEGETATIVE SURFACE DETAILS

This drawing subject to conditions in contract. All inventions, ideas, designs and methods herein are reserved to Port Authority and may not be used without its written consent.
All recipients of Contract documents, including bidders and those who do not bid and their prospective subcontractors and suppliers who may receive all or a part of the Contract documents or copies thereof, shall make every effort to ensure the secure and appropriate disposal of the Contract documents to prevent further disclosure of the information contained in the documents. Secure and appropriate disposal includes methods of document destruction such as shredding or arrangements with refuse handlers that ensure that third persons will not have access to the documents' contents either before, during, or after disposal. Documents may also be returned for disposal purposes to the Contract Desk on the 3rd Floor, 3 Gateway Center, Newark NJ 07102 or the office of the Director of Procurement, One Madison Avenue, 7th Floor, New York NY 10010.
It is a violation of law for any person to alter a document in any way, unless acting under the direction of a licensed professional engineer or registered architect. If this document bearing the seal of an engineer/architect is altered, the altering engineer/architect shall affix to the document their seal and the notation "altered by" followed by their signature and the date of such alteration, and a specific description of the alteration.

Designed by Drawn by Checked by

Date **03/14/2014**

Contract Number

Drawing Number **TD300.41**

PID#