Quality Assurance Division

TENANT CONSTRUCTION REVIEW MANUAL

December 2008

Engineering Department

THE PORT AUTHORITY OF NY & NJ

Quality Assurance Division

TENANT CONSTRUCTION REVIEW MANUAL

December 2008

This page is intentionally left blank.

TABLE OF CONTENTS

SECTION 1	INTRODUCTION	5
SECTION 2	GENERAL REQUIREMENTS	7
SECTION 3	CODES, REGULATIONS, AND STANDARDS	9
SECTION 4	CONCEPTUAL REVIEW	13
SECTION 5	ARCHITECTURAL	15
SECTION 6	STRUCTURAL	21
SECTION 7	GEOTECHNICAL	25
SECTION 8	CIVIL	29
SECTION 9	ELECTRICAL	37
SECTION 10	MECHANICAL	49
SECTION 11	PLUMBING	53
SECTION 12	FIRE PROTECTION	57
SECTION 13	PROTECTION FROM AIRPORT RAMPSIDE FUEL SPILL FIRE	61
SECTION 14	MATERIALS AND EQUIPMENT APPROVAL AND INSPECTION	65
SECTION 15	ENVIRONMENTAL	69
SECTION 16	CORROSION CONTROL/CATHODIC PROTECTION	73
SECTION 17	TRAFFIC	79
SECTION 18	ATTACHMENTS	85
A1	STANDARDS FOR INTERIOR PLASTIC SIGNS	87
A2	SPECIFICATIONS GOVERNING THE FLAMMABILITY OF DRAPERY AND CURTAIN MATERIALS IN UNSPRINKLERED AREAS	97
A3	SPECIFICATIONS GOVERNING THE FLAMMABILITY OF UPHOLSTERY MATERIAL AND PLASTIC FURNITURE IN UNSPRINKLERED AREAS	99
A4	SPECIFICATIONS GOVERNING THE FLAMMABILITY OF PLASTIC LAMINATE AND WOOD VENEER FURNITURE IN UNSPRINKLERED AREAS	101
A5	MARKING OF TRANSPARENT GLASS DOORS AND FIXED ADJACENT GLASS SIDELIGHTS	103
S1	PLASTER CEILING DESIGN STANDARDS	107
S2	SUSPENDED LIGHTWEIGHT CEILINGS DESIGN CRITERIA	115
S3	LGA – CTB NON STRUCTURAL CONCRETE FILL OVER CELLULAR STEEL DECKING	117
S4	PORT AUTHORITY BUS TERMINAL LIGHTWEIGHT CONCRETE SLAB AREAS	121
C1	INDEX OF CIVIL STANDARD DETAILS	123
C2	INDEX OF STANDARD CIVIL SPECIFICATIONS	127
C3	INDEX OF CIVIL DESIGN GUIDELINES	129
E1	ELECTRICAL MANHOLE AND DUCTBANK DETAILS	133
E2	PORT AUTHORITY BUS TERMINAL ELECTRICAL DESIGN CRITERIA	139
M1	PORT AUTHORITY BUS TERMINAL HVAC DESIGN CRITERIA	143

M2 PA BUS TERMINAL PLUMBING & FIRE PROTECTION DESIGN CRITERIA 149
RFS1 AIRPORT RAMPSIDE CLEARANCES 151
T1 INDEX OF TRAFFIC STANDARD DETAILS 153
INSP1 SPECIAL INSPECTION ITEMS- NEW YORK CITY FACILITIES 161
INSP2 SPECIAL INSPECTION ITEMS- NEW JERSEY FACILITIES 163
INSP3 SPECIAL INSPECTION ITEMS- NEW YORK STATE FACILITIES 165
LS1 LANDSCAPE ARCHITECTURAL DESIGN AT AIRPORTS 167

Historical Notes:
First published 1971; Rev. 1979; updated March 1984; Rev. March 1990; Rev. March 1997; Rev. March 2003; Rev. December 2008

SECTION 1 INTRODUCTION

This Manual presents the technical criteria to be followed by Tenants, and their Architectural and Engineering consultants, for construction work undertaken by a Tenant at Port Authority (PA) facilities. These technical criteria are in addition to other requirements contained in the lease agreement between the Port Authority and the Tenant. This Manual also covers the Port Authority Engineering Department's scope-of-review of the design documents (plans, specifications, calculations and other documents) submitted by Tenants in connection with proposed construction or alterations. It shall not be deemed to imply that there will not be additional reviews by other Port Authority Departments.

The Construction Design Standards Unit of the Engineering Department's Quality Assurance Division will review the Tenant Construction/Alteration Application submitted by the Tenant in accordance with the criteria contained in this Manual. The responsibility for Architectural and Engineering design shall remain with the Tenant's Architect or Engineer (A/E) of record. The Construction Design Standards Unit will not impose design solutions but will only comment on the design presented.

Reviews will not address the aesthetic or functional aspects of the design.

Construction documents for Tenant construction or alterations will be reviewed for compliance with all applicable Codes and Port Authority Technical Standards. In the absence of a specific code provision, this Manual sets forth the applicable standards to be followed by Tenants except as may otherwise be required. All design documents shall reflect the existing construction as well as the proposed work in order to determine compatibility with existing facility conditions. In this regard, a list of all reference documents and guidelines which the Tenant has obtained from the PA facility Tenant liaison office, and which affect the design, shall be included in the Tenant's construction document submission. If the review process will be aided by the inclusion of these reference documents, the documents should also be included in the submission.

This page is intentionally left blank.

I. All proposed Tenant construction shall be submitted for review, in completed form, accompanied by a "Tenant Construction or Alteration Application," Form PA531, which shall be provided to the Tenant by the appropriate Port Authority line department.

The PA line department shall forward all Tenant submittals to the Engineering Quality Assurance Division for review.

II. The design documents, such as drawings, reports, computations and specifications, required in connection with the proposed construction, shall be submitted with the Tenant Construction or Alteration Application. Existing construction shall be properly identified on the drawings. The design documents shall be sealed and signed by the Architect or Engineer of record licensed to practice in the State in which the proposed construction is to be performed. The Architect/Engineer indicated on the Application shall be considered the Architect or Engineer (A/E) of record. The required number of sets of drawings may be minimized if an electronic file (compact disc) of the drawings is included in the submission. The formatting and other requirements for the electronic file can be obtained from the PA facility Tenant liaison office.

Where other consultants have been acknowledged by the A/E of record, either in the Tenant Alteration Application or on the drawings, said consultants may seal and sign the documents they have prepared.

The A/E of record is responsible for assuring that the documents prepared by other consultants are properly coordinated.

Where the Tenant retains two or more independently functioning consultants, they each become an A/E of record for their respective scope of work. Each consultant will be required to submit a separate Tenant Alteration Application, and each consultant shall seal and sign their respective documents.

A signed and sealed statement from the A/E of record certifying compliance with the Energy Conservation Code of New York State shall be submitted with the Tenant Construction or Alteration Application for construction projects in all Port Authority facilities within New York City.

Responsibility for design or code compliance shall not be delegated to contractors.

III. All revisions to previously submitted documents shall be properly identified, and shall be accompanied by a brief description of the revisions.

IV. All voluntarily installed Fire Protection systems, including, but not limited to sprinklers, alarms, etc., shall comply with the provisions of the applicable Building Codes for such systems.

V. Fire protection plans, as described in article 109 of title 28 of the Administrative Code of the City of New York (New York City Construction Codes), shall be required along with other design documents for construction projects at all Port Authority facilities within New York City. After approval of the project for construction, and before a Permit to Occupy or Use is issued, the Tenant shall submit one (1) copy of these plans to the Manager of the Facility where the project is located, one (1) copy to the Inspection and Safety Division of the Operations Services Department and two (2) copies to the Quality Assurance Division of the Engineering Department.

VI. In accordance with the policy of the Port Authority of New York and New Jersey, the Tenant shall comply with the provisions of all federal, state, municipal, local and departmental laws, ordinances, rules, regulations and orders that may affect the construction or alteration. Where stricter requirements, stipulated in this Manual, apply, they shall be followed. The Tenant, or designated agents, shall not apply for any variance, license, waiver or permit from any municipal or governmental agency in the name of or on behalf of the Port Authority.

VII. All tenant construction or alteration projects are required to adhere to the Port Authority's Sustainable Design Policy. Details of the policy and the Sustainable Design Guidelines can be obtained from the PA facilities Tenant liaison office.

VIII. All landscape work at the airports that are within the scope of a TAA shall comply with Attachment LS1 in Section 18 of this Manual.

IX. The Attachments in Section 18 of this Manual are supplementary to the technical sections and shall be part of the requirements.

SECTION 3 CODES, REGULATIONS, AND STANDARDS

I. GENERAL

The construction documents, such as drawings, reports, computations, and specifications, required for the proposed construction or alteration project shall comply with the applicable codes, regulations and standards listed below and any additional regulations and standards listed in the respective technical sections of this Manual.

II. CODES AND REGULATIONS

A. New York City:

1. New York City Administrative Code, Title 28

2. New York City Construction Codes and their Reference Standards and Appendices. The New York City Construction Codes include:

   New York City Building Code
   New York City Mechanical Code
   New York City Plumbing Code
   New York City Fuel Gas Code

3. New York City Electrical Code

4. New York City Fire Code and Directives

5. New York City Health Code

6. New York City Local Laws

7. Rules of the City of New York:

   Title 1, Department of Buildings
   Title 2, Board of Standards and Appeals (BS&A)
   Title 3, Fire Department
   Title 24, Department of Health

8. New York State Labor Laws

9. New York State Multiple Dwelling Laws (Hotels)

10. Energy Conservation Construction Code of New York State

11. Directives and Memoranda of the Department of Buildings

B. New Jersey:

1. New Jersey Uniform Construction Code (NJUCC), its bulletins and the sub-codes with their Supplements and Reference Standards

2. New Jersey Uniform Fire Code

3. New Jersey Administrative Code - Title 7, Environmental Protection Laws

4. Applicable regulations of the NJ Department of Environmental Protection

C. New York State:

1. New York State Uniform Fire Prevention and Building Code which includes the following:

   Building Code of New York State (BCNYS)
   Mechanical Code of New York State (MCNYS)
   Plumbing Code of New York State (PCNYS)
   Fuel Gas Code of New York State (PCNYS)
   Fire Code of New York State (FCNYS)
   Existing Building Code of New York State (EBCNYS)
   Property Maintenance Code of New York State (PMCCNYS)

2. Energy Conservation Construction Code of New York State

3. New York State Multiple Dwelling Laws (Hotels)

D. All PA Facilities:

1. Americans with Disabilities Act (ADA)

2. Applicable Flood Control/Regulations

3. Federal Occupational Safety and Health Administration (OSHA) Regulations

4. Applicable regulations of the U.S. and local Environmental Protection Agency

5. Applicable regulations of the local municipal water supply, gas utility, and sanitary sewer governing agencies

E. All Airports:

1. Federal Aviation Regulations – Title 147 Part 139 Certification of Airports Subpart D – Operations

III. STANDARDS

The latest editions of the following standards shall be used:

AASHTO	American Association of State Highway and Transportation Officials
ANSI/EIA/TIA-222-E	Structural Standards for Steel Antenna Towers and Antenna Supporting Structures
AREMA	American Railway Engineering and Maintenance-of-Way Association
NFPA	National Fire Protection Association:
20	Standard for the Installation of Stationary Fire Pumps for Fire Protection
24	Installation of Private Fire Service Mains and Their Appurtenances
25	Standard for Inspection, Testing, and Maintenance of Water-Based Fire Protection Systems
30	Flammable and Combustible Liquids Code
72	National Fire Alarm Code
75	Protection of Electronic Computer/Data Processing Equipment
130	Standard for Fixed Guide-way Transit and Passenger Rail Systems
407	Aircraft Fuel Servicing
409	Aircraft Hangars
415	Airport Terminal Buildings, Fueling Ramp Drainage, and Loading Walkways

This page is intentionally left blank.

I. GENERAL

At the Tenant's request, a Conceptual Review will be performed to provide comments on the preliminary design. These reviews will inform the consultants of established design criteria, pre-existing conditions that determine code compliance, and Port Authority requirements affecting the proposed work. The conceptual review shall be limited to fundamental concepts and items related to the criteria in this Manual that may significantly affect the design. The review will not address aesthetics or functional design.

Submitted conceptual plans shall indicate conformance to the applicable codes and design criteria.

II. SCOPE OF REVIEW

The scope of the Conceptual Review includes the following items:

A. Occupancy group and construction classification of the new, altered, and adjusted areas.

B. Fire protection of spaces in the building as it applies to ratings of interior separations, shafts, exterior walls, and sprinkler requirements.

C. Egress: Occupant load and adequacy of egress shall be established or the Tenant's Architect/Engineer may list the sections of the applicable Code on which the design is based. New Tenant egress scheme(s) shall be coordinated with existing conditions.

D. Special structural conditions, including foundations.

E. Special or unusual mechanical or electrical problems affecting environmental, energy, or power requirements.

F. Deviations from Code requirements.

III. PORT AUTHORITY DESIGN CRITERIA

See the subsequent Technical Sections of this Manual for specific criteria.

This page is intentionally left blank.

I. GENERAL

The scope of the architectural review shall comprise compliance with the applicable codes, regulations, and standards listed in Section 3 of this Manual, and Port Authority design criteria listed below.

II. PORT AUTHORITY DESIGN CRITERIA

A. General:

1. In unsprinklered areas, upholstered materials, furniture and draperies shall conform to the specifications governing flammability. See Section 18, Attachments A2, A3, and A4.

2. All baggage handling areas and conveyor spaces inaccessible to fire fighting equipment shall be provided with a sprinkler system. Spaces over all types of ceilings are considered inaccessible.

3. Conveyor belting shall be flame resistant. When subjected to a flame test in accordance with ASTM D378, the duration of flame shall not exceed an average of one minute after removal of the applied flame (after-flame time) and the duration of afterglow shall not exceed an average of three minutes. Test results shall be submitted for review.

4. Storage under canopies (such as at cargo buildings) shall be considered as storage occupancy group S-2, low hazard.

5. Baggage handling spaces in the airports shall be classified as storage occupancy group S-2, low hazard.

6. For Interior Plastic Sign Standard, see Section 18, Attachment A1.

7. For marking of Transparent Glass doors and fixed Adjacent Glass Sidelights, see Section 18, Attachment A-5.

8. Conveyor openings in fire rated construction, shall be protected with fire shutters with the appropriate fire protection rating. Fire shutters shall be provided with positive means to ensure the

prevention of obstructions interfering with the closing of fire shutters. These fire shutters shall be integrated with:

a. Smoke detectors provided on each side of the wall and located in concordance with NFPA 80 and the manufacturer's listing, in order to actuate the motorized shutters and the alarm system

b. Leading edge or electric eye devices to permit the passage of an obstruction on the conveyor by retraction of the fire shutter

c. Emergency power for the operation of the rated shutter(s), as well as for an adequate portion of the conveyors, to enable the passage of obstructions at the rated shutter(s)

d. Stoppage of the conveyors

e. Operation of other smoke and heat detectors within the fire zone shall also actuate these shutters

9. For openings in walls with fire resistance rating of 2 hours or less, a system of water spray nozzles may be used in lieu of fire shutters. At least four nozzles shall be provided on each side of the opening so as to give complete coverage of the opening. Nozzles shall be controlled by an automatic valve actuated by a heat detector. Nozzles shall be located at an angle not more than thirty degrees between the centerline of nozzle discharge and a line perpendicular to the plane of the opening. The water discharge rates shall be at least three gallons per square foot per minute.

10. Where spaces are provided with grilled openings for entrance and exiting, a safe means of egress shall be provided for the employees who may stay inside the space after the grille is closed, consisting of:

a. A door in compliance with code requirements; or

b. An approved device that will open the grille from inside

B. Airports:

1. All Airports:

a. All construction at JFK and LaGuardia Airports shall comply with the requirements for fire district in accordance with Appendix D in the New York City Building Code.

b. The means of egress for passenger terminal buildings shall be designed for an occupant load consisting of the sum of the passengers (100% capacity of aircraft), meeters and greeters, and employees, based on maximum anticipated flight schedules (such as holidays or other seasonal peaks), and a two (2) hour delay of flights. This number shall not be less than the occupant load computed based on the maximum floor area allowances per occupant in the code. Consideration shall be given to locations of concentrated crowding, rather than assuming uniform distribution of occupants over the entire building.

c. In passenger terminal buildings, concessions serving the public that are open to the public spaces shall be considered as part of the public space (Assembly Occupancy). Storage space belonging to concessions shall be enclosed as required by Code. Also, adjacent concession areas shall be separated from each other as required by Code for different tenancies.

d. For aircraft loading walkways, and for protection of buildings from ramp-side fuel spill fires, see Section 13 of this Manual.

e. Protection and fire rating of building walls and over-hangs adjacent to aircraft fuel pipeline surge suppressors shall be in accordance with NFPA 30 and shall be designed to have a fire rating depending on their distance 'd' as a radius from the surge suppressor:

$d > 25$ feet; fire rating = 0
$d > 10$ feet; fire rating = 2 hours
$d < 10$ feet; fire rating = 4 hours

2. LaGuardia Airport, Central Terminal Building:

a. The main building conforms to construction classification 1B of 1968 Building Code of the City of New York.

b. The fingers are unprotected steel construction, classification 1E of the 1968 Building Code of the City of New York, separated from the main building with fire shutters, and are further subdivided into fire areas.

c. On the third (3rd) floor of the Terminal Building, a Safe Area, in compliance with Article 8 of the 1968 Building Code of the City of New York, constitutes part of the overall means of egress from the floor. The Safe Area consists of the central east-west corridor together with the public areas at the termination of the connectors from the parking garage.

III. DETAILS OF ARCHITECTURAL REVIEW

The following are representative of items reviewed:

A. Occupancy (use) of spaces, construction classification (hourly rating of the structure), and their compatibility.

B. Requirements of sprinklers, standpipes, smoke detectors, fire alarms, and exit signs

C. Provisions for the physically disabled persons

D. Compartmentation of spaces (rated separations, shafts, etc.)

E. Fire protection of building components and finishes (includes documentation verifying that all materials and equipment used are of an approved type)

F. Egress, establishing occupant load and existing capacity, including door and hardware requirement

G. Verification of strength of all glass subject to human impact, and the requirement for markings

H. Provision of plumbing fixtures (toilets, lavatories, drinking fountains, etc.)

I. Protection of airport terminal buildings from fires at ramp-side potential fuel spill points (PFSP). See Section 13 of this Manual.

J. Compliance with PA Standards and Specifications governing the Flammability of Plastic signs, Drapery, Upholstery and Plastic Furniture. See Section 18, Attachments A1 through A4.

This page is intentionally left blank.

I. GENERAL

A. The scope of the structural review shall comprise compliance with the applicable Codes, regulations, and standards listed in Section 3 of this Manual, and the design criteria listed below.

B. Computations shall be submitted with the structural plans.

II. PORT AUTHORITY DESIGN CRITERIA

A. Drilled-in adhesive anchors shall not be permitted for fastening to concrete in overhead applications.

B. In the LaGuardia Airport Central Terminal Building, concrete anchors or attachments to the steel decking are not permitted for connection of hangers for ducts, utilities, ceilings, bracings, signage and other miscellaneous loads in areas where the floor is constructed of non-structural concrete fill over cellular decking (See Section 18, Attachment S3 for locations). All such loads in these areas shall be directly supported from the existing structural floor framing or supplementary framing shall be provided to transfer the loads to the existing framing members.

C. Floors in certain areas of the Port Authority Bus Terminal South Wing are of lightweight low strength concrete construction. (See Section 18, Attachment S4 for locations). Concrete anchors are not permitted in these lightweight slabs for the attachment of hangers for supporting ducts, utilities, ceilings, and other miscellaneous loads. These loads shall be supported directly from floor beams or supplementary framing connected to the floor beams.

In areas where concrete inserts are permitted, only approved type stainless steel anchors rated for shock and vibration loads and elevated temperature shall be used.

D. Ceilings:

1. Plaster Ceiling Design Standards - See Section 18, Attachment S1

2. Lightweight Ceiling Design Criteria - See Section 18, Attachment S2.

E. Vehicular Traffic:

1. Elevated roadways shall be designed for all loadings, including seismic effects, in accordance with the AASHTO "Standard Specifications for Highway Bridges" and the relevant State DOT Standards.

2. The loading for the departure and arrival ramps servicing airport passenger terminals shall be HS 20-44 AASHTO highway loading. All other ramps servicing cargo facilities or road overpasses shall be designed for HS 25 AASHTO highway loading.

F. Signs:

1. Highway signs and luminaries shall conform to the AASHTO (American Association of State Highway and Transportation Officials) Standard Specifications for Structural Supports for Highway Signs, Luminaries and Traffic Signals.

2. Exterior signs adjacent to vehicular traffic such as streets, highways, trains and light rail vehicles or open terrain shall be designed in accordance with the AASHTO Standard Specifications for Structural Supports for Highway Signs, Luminaries, and Traffic Signals. All other exterior signs shall be designed as per the applicable local building code.

3. Interior signs located in the entrance lobbies, entrance vestibules or boarding platforms of transportation terminals shall be designed for an incidental wind gust pressure of 15 psf. All other interior signs shall be designed for a minimum lateral pressure of 5 psf.

4. Interior signs shall also be designed for earthquake loads as per the applicable local building code.

5. All signs (exterior or interior) which require routine cleaning or servicing (i.e., variable message, internally lighted, etc.), whether or not specifically designed for a servicing device, shall be designed for all anticipated additional loads, but not less than a 100-lb concentrated horizontal load and a 300 –lb concentrated vertical load applied at the point of assumed or most eccentric loading. The additional concentrated loads shall be applied in combination with the sign dead load (not concurrent with wind or earthquake loads).

G. Aircraft loading walkways (Airports) design loads and the worse case loads combination shall be as prescribed in NFPA 415, Chapter 6.

III. DETAILS OF STRUCTURAL REVIEW

The following are representative of items reviewed:

A. The design calculations shall include but not be limited to:

1. Design criteria and applicable Codes
2. Reference Standards
3. Design loads, including wind and other forces
4. Allowable soil bearing capacity
5. Pile type and capacity
6. Design of connections other than AISC standard framed or seated beam connections
7. Location and details of expansion joints
8. Bracing systems and moment-resisting frames
9. Deflections and wind drift
10. Ponding
11. Investigation of superimposed loads from new construction on existing structure and foundation
12. Investigation of existing structural system and foundations under additional loads due to alterations

13. Where it has been established that post-construction settlements of foundations are to be monitored, the monitoring program, the limits of differential settlement that the structure can tolerate, and the necessary adjustments shall be submitted for review.

B. Drawings shall include, but not be limited to, the following Information:

1. Applicable Code and Reference Standard

2. Materials

3. Design live loads, wind, and other forces

4. Location and details of expansion joints

5. Machinery, equipment, and other concentrated loads in excess of 1000 lbs. Including footprints or support layout(s)

6. Allowable soil bearing capacity

7. Pile type, capacity, and minimum tip elevation

8. Accumulated design load for columns at each level for dead and live loads

9. Stress diagram(s) for trusses

10. Datum and ground water elevations

11. Typical moment connection details

12. Details of non-standard connections

13. Construction sequence

C. Specifications shall include, but not be limited to:

1. The scope of work and materials required for the construction or alteration

2. Limitations and restrictions due to the existing conditions and/or requirements for the methods of construction or staging

I. GENERAL

The scope of the geotechnical review shall be for compliance with the applicable codes, regulations and standards listed in Section 3 of this Manual, and the design criteria listed below. The review will include an evaluation of the Geotechnical Investigation and Foundation Design Report to verify that the choice of foundation system(s) is compatible with the subsurface conditions and the structure(s) to be supported. In the absence of definitive code requirements, PA standards and established practice will apply.

II. PORT AUTHORITY DESIGN CRITERIA

The minimum frost depth shall be three (3) feet.

III. PORT AUTHORITY STANDARDS

A. The following PA Standard Specifications shall apply for Tenant projects:

1. Steel Pipe Piles
2. Steel H Piles
3. Timber Piles
4. Monotube Piles
5. Drilled Minipiles
6. Tapertube Piles
7. Pile Coating
8. Pile Load Tests
9. Dynamic Pile Testing
10. Steel Sheeting Piling
11. Caissons
12. Aggregate Base Course

13. Open Graded Aggregate Base Course

14. Excavation, Backfill, and Fill

15. Instrumentation for Settlement and Groundwater Observations

16. Slurry Wall

17. Soil Erosion and Sediment Control

18. Dredging

19. Dewatering

20. Rock Excavation

21. Pre-stressed Soil and Rock Anchors

22. Rock Dowels

23. Pressure Grouting

24. Vertical Wick Drain

IV. DETAILS OF GEOTECHNICAL REVIEW

The following are representative of items that will be reviewed:

A. Required Report:

The Geotechnical Investigation and Foundation Design Report, signed and sealed by a registered Professional Engineer. The report shall include the applicable items listed below:

1. A description of the planned structure

2. Results of geotechnical site investigation, including test borings and laboratory tests; also, review of previous data obtained by the Port Authority or others

3. A plot showing the location of test borings and/or excavations

4. A record of the soil profile

5. Datum and ground water elevations

6. Description of foundation system(s) or planned ground improvement methodology

7. Recommendations for foundation type and design criteria, including but not limited to: bearing capacity of natural or compacted soil; provisions to mitigate the effects of expansive soils; mitigation of the effects of liquefaction, differential settlement and varying soil strength; and the effects of adjacent loads

8. Expected total and differential settlement

9. Pile and pier foundation recommendations and installed capacities

10. Special design and construction provisions for footings or foundations founded on treated soils, as necessary

11. Requirements for compacted fill material properties and testing

12. Sub-grade Soil Modulus (CBR, MR, K)

B. Calculations shall include the applicable items listed below:

1. Results of engineering evaluations of geotechnical site conditions, including interpretation of test boring and laboratory test results

2. Estimates of settlement resulting from the proposed construction at the construction and adjacent sites (structures, pavement, utilities)

3. Analyses for the design of sand drains, surcharging, deep compaction or other ground improvement methods

4. Where it has been established that post-construction settlement of foundations must be monitored, the instrumentation and monitoring program shall be submitted for review. Also, see Section 6, III.A.13 of this Manual.

5. Stability analyses for earth slopes, embankments, and deep excavations, both during and at the completion of construction

6. Analysis of dewatering and seepage control measures

7. Capacity analyses for earth and rock anchors

8. Pile foundation requirements including pile type, pile capacity, group action, down drag load, minimum pile tip elevation, pile driving hammer type and minimum transferred energy, and seismic loadings

9. Seismic liquefaction analysis, when required. Site specific analyses may be submitted, provided they incorporate ground motions derived from a seismic hazard analysis that has been reviewed and approved by the PA

10. Analysis of impacts on adjacent properties or utilities

I. GENERAL

The scope of Civil Engineering review shall comprise conformance with the applicable codes, regulations, and standards listed in Section 3 of this Manual, and other guidelines established in this section. The items to be reviewed will include proposed paving, sanitary sewer system, storm sewer system, gas utility, cold water domestic and fire protection distribution system construction whenever they are placed in areas outside of the leasehold.

Additionally, any proposed construction that connects to or impacts upon Port Authority utility systems or affects another Tenant, regardless of whether it is within the leasehold area, shall come under this review, and shall conform to Port Authority Civil Standard Details, Specifications, and Design Guidelines, included in Section 18, Attachments C1, C2 and C3, respectively.

In certain cases as noted herein, use of the Standard Details, Specifications and the Design Guidelines is required. When not required, the Tenants may choose to use these in lieu of developing their own designs. The standard Details, Specifications and the Design Guidelines will be provided by the Port Authority Engineering Department's Quality Assurance Division, when required for a specific Tenant project and requested through the facility Tenant liaison office.

The portions of the sanitary, water utilities, and storm sewers that service or will service more than one Tenant's leasehold (or premises) are hereinafter referred to as "for common service" sections of the respective utility.

II. PORT AUTHORITY DESIGN CRITERIA AND STANDARDS

A. General:

All site work outside the lease line shall conform to the appropriate Port Authority Civil Standard Details, Specifications and Design Guidelines. See Section 18, Attachments C1 and C2.

1. At all aviation facilities, the latest edition of the Federal Aviation Administration (FAA) Advisory Circulars, including but not limited to the following, shall be used:

FAA-AC150/5300-13	Airport Design
FAA-AC150/5320-5	Surface Drainage Design
FAA-AC150/5320-6	Airport Pavement Design and Evaluation
FAA-AC150/5340-1	Standards for Airport Markings
FAA-AC150/5370-13	Off-Peak Construction of Airport Pavements using Hot-Mix Asphalt

2. At all aviation facilities, the latest edition of the Federal Aviation Regulations (FAR), including but not limited to the following, shall be used:

139.305	Paved Areas
139.309	Safety Areas
139.311	Markings, signs and lighting
139.341	Identifying, marking and lighting construction and other unserviceable areas
139.335	Public Protection

B. Paving:

1. General:

a. Pavement shall be designed using a recognized procedure.

b. Sidewalks outside of the lease line shall conform to the latest PA Standard Detail Number 062.021 A&B and Americans with Disabilities Act guidelines.

2. Aviation Facilities:

a. Paving of taxiways, taxi lanes, or aprons to be constructed within Public Aircraft Facility (PAF) areas, or in areas to be used by more than one Tenant, shall conform to the latest PA Standard Details Number 062.001 or 062.004 or the latest FAA Advisory Circular, whichever results in the thicker pavement. Design calculations shall be submitted for review and approval

b. Paving within the Tenant's lease line should be designed in accordance with the latest FAA Advisory Circular.

c. Stabilization pavement shall be required wherever a blast from the aircraft may cause erosion of soil. Stabilization pavement shall conform to the latest PA Standard Detail Number 062.001 or 062.004 or with the latest FAA Advisory Circular, whichever results in thicker pavement.

d. Roadway pavements outside of the lease line shall conform to the latest PA Standard Details Number 062.001 or 062.004 or the latest AASHTO guide whichever results in the thicker pavement. Design calculations shall be submitted for review and approval.

C. Storm Sewer:

1. General:

a. Hydrologic and Hydraulic design shall conform to the Engineering Design Guidelines- Civil or an approved alternative method. See Section 3.6 of Section 18, Attachment C3.

b. Common service storm sewers shall be properly supported as per PA Standard Detail Number 041.001, or 066.002, or as determined by ASCE Manual No. 77 methods.

c. Verify that new and existing pipes can withstand the heaviest vehicle loads.

2. Aviation Facilities:

a. Surface drainage of airport aprons shall comply with the National Fire Protection Association (NFPA) Standards 407, 409, and 415, and Section 13 herein.

b. At the aircraft fueling ramps, fuel storage areas, and fuel truck parking areas, drainage inlets shall be equipped with vapor trap hoods. The hoods shall provide a minimum of 12 inches of water seal.

c. Common service storm sewer appurtenances and pipes shall be designed to withstand the heaviest anticipated aircraft or vehicle load. PA Standard Detail Numbers

010.010, 020.013 and 20.014 shall be used wherever appropriate.

3. Port/Commerce Facilities:

a. Sewer appurtenances and pipes within the Tenant's lease line shall be designed to withstand the heaviest anticipated container, container handling equipment or vehicular load. PA Standard Detail Numbers 010.014 and 020.021 shall be used wherever appropriate. Submit computations for review and approval

D. Sanitary Sewers:

1. General:

a. Hydraulic Design shall conform to Section 3.8 of the Engineering Design Guidelines - Civil. See Section 18, Attachment C3.

b. In New York City, for all proposed Tenant's sanitary sewer connections made to the city sewer off PA property, the Tenant shall be required to apply directly to the appropriate City Department for approval and a note to that effect shall appear on the drawings.

c. Sanitary sewers shall be properly supported as per PA Standard Detail Numbers 043.001, or 066.001,or as determined by ASCE Manual No. 60 methods.

d. Verify that new and existing pipes can withstand the heaviest vehicle loads.

2. Aviation Facilities:

a. Common service sanitary sewer appurtenances and pipes shall be designed to withstand the heaviest anticipated aircraft or vehicular load. PA Standard Details shall be used wherever appropriate.

3. Port/Commerce Facilities:

a. Sewer appurtenances and pipes within the Tenant's lease line shall be designed to withstand the heaviest anticipated container, container handling equipment or vehicular load. PA Standard Detail Number 010.014 shall be used wherever appropriate.

E. Exterior Water Distribution Systems:

1. General:

a. Coldwater Distribution systems shall be designed in accordance with Section 3.7 of the Engineering Design Guidelines - Civil. See Section 18, Attachment C3.

b. The cold water distribution system pipes and appurtenances are interconnected to the facility-wide cold water distribution systems and are for common service, and must conform to the requirements of the local municipal water authority. Port Authority Standards and Specifications are in compliance with these requirements and shall be utilized.

c. All coldwater distribution system pipes and appurtenances shall be designed to withstand the heaviest anticipated aircraft, container, container handling equipment or vehicle load.

d. All coldwater distribution system pipes shall have either a minimum cover of 4'-0", or be heat traced and Insulated.

e. Pipe protection shall conform to the requirements of the Engineering Design Guidelines - Civil. See Section 18, Attachment C3.

f. Fire hydrants shall be spaced in accordance with the National Fire Protection Association Standards and Guides, and local municipality requirements, but in no case shall any part of a building's periphery be more than 300 feet from a hydrant.

g. Shut off valves shall be used at the point of connection wherever a proposed main is to be added to the existing distribution system.

h. All fire hydrants shall be connected to the supply main through a valved connection.

i. All curb and street valves shall be provided with a valve box meeting the requirements of the local municipal water authority.

j. All water distribution pipes and appurtenances shall be restrained against thrust forces. Thrust blocks are not permitted.

2. Port Facilities:

a. Hydrant spacing shall conform to NFPA (maximum 300', 150' at dead ends) except where PA Risk Management has approved a greater spacing in container yards.

b. In container yards, every effort shall be made to locate valves where they will not be obstructed by grounded containers.

c. Where a hydrant is more than 50' from the main or where the valve at the main is not in an aisle, provide valves at both the main and the hydrant.

d. In Port Newark and the Elizabeth PA Marine Terminal, provide additional joint restraint from the valve to the hydrant in accordance with the latest version PA Standard Detail 030.015. The joint restraints shall be of a type that can be removed and restored without cutting the pipe.

F. Gas Utilities:

Gas service piping design and installation shall conform to the standards and requirements of the utility company whose jurisdiction covers the area in which the construction takes place. Verification of this conformance shall be submitted.

G. Security Fence:

PA Standard Detail Number 090.011 and Standard Specification Section 02831 or 02832 shall be used for security fencing.

III. DETAILS OF CIVIL REVIEW

The following are representative of details reviewed:

A. Design Computations:

1. Pavement: Design procedure, service life, design vehicle and volume of traffic, structural design
2. Drainage: Hydrologic and hydraulic design

3. Sanitary Sewers: Design flow and hydraulic design

4. Water Supply: Design demands, residual pressure, hydraulic design, and thrust restraint

5. Computations showing the structural capacity of new and existing utility service lines and appurtenances to support new loads, signed and sealed by the Professional Engineer licensed to practice in the State where the work is to be performed.

6. The PA Engineering Department shall be informed of the water demand and sewer load during the earliest stages of design.

B. Plans:

1. Location and site plan with lease lines, showing all the coordinates

2. All areas to be paved and pavement details

3. All underground utility service lines (proposed and existing). The Design Consultant shall research and show the existing utilities on the plans. These will not be delegated to the contractor during construction.

4. Details for all proposed utility service lines and appurtenances

5. Whenever an existing utility service line is to be interrupted by specified work, a note requiring advance notification to facility operations personnel shall appear on the drawings.

6. Security fence detail and location

This page is intentionally left blank.

I. GENERAL

The scope of the electrical review encompasses an examination of the design drawings, specifications, and computations for compliance with the applicable Codes, regulations, and standards listed in Section 3 of this Manual, and Port Authority design criteria listed below.

II. PORT AUTHORITY DESIGN CRITERIA

A. General:

1. Electrical power shall be purchased from the PA for tenancies in the following facilities:

   World Trade Center
   JFK Airport
   LGA Airport
   Teleport
   Bathgate Industrial Park
   Port Authority Bus Terminal

   At JFK, terminal building tenant power distribution systems shall be based on second contingency conditions of the PA 5 kV services.

   All metering wiring shall be shown on the drawings where power is purchased from the PA.

2. Construction over existing duct banks and manholes shall not be permitted. Existing duct banks which fall within the footprint of the structure shall be relocated prior to commencing construction. Verify that existing duct banks to be relocated do not have asbestos conduits.

3. Manholes shall not be installed within the footprint of a structure.

4. Exploded-view drawings of existing and proposed electrical manholes in which the Tenant performs any work shall be submitted for review.

5. For fire detection and alarm requirements see Section 12 of this Manual.

6. For aircraft loading walkway requirements see Section 13 of this Manual.

7. For fire shutters in conveyor systems see Section 5 of this Manual.

8. PVC conduits shall not be used within buildings. PVC conduits and PVC insulation for wiring other than that for communications systems or remote control, signaling, or power limited circuits shall not be used in the Lincoln, Holland and PATH tunnels.

9. The minimum size underground conduit for power and communication systems shall be 2 inches. Provide a minimum of 25% spare conduits but not less than two spare conduits in each duct bank.

10. All underground duct banks shall be concrete encased and installed 2'-6" minimum below finished grade. The design and installation shall conform to PA standard detail for duct bank design. See Section 18, Attachment E1.

11. Conduits shall enter and leave manholes through the short-side walls, perpendicular to the walls. A drawing with tablet information showing each proposed manhole and its duct bank layout that is to be used for the power and communication systems shall be provided for all projects.

12. Shop drawings of medium voltage or service entrance switchgear shall be submitted for PA approval in advance of fabrication. The PA may request to participate in the factory inspection of the switchgear.

13. The Port Authority staff shall have exclusive 24/7 access to all areas, equipment and raceways associated with Port Authority systems without effecting tenant operations.

14. The maximum separation between manholes shall not exceed 450 feet. Duct banks shall be sloped towards the manholes to provide adequate drainage.

15. Conduits from manholes, hand holes or duct banks into buildings or remote equipment locations shall be changed to rigid steel prior to emerging from below grade.

16. Duct banks installed under vehicular roadways or other areas (parking lots, etc.) where trucks or other heavy equipment travel shall be concrete encased with high early strength concrete that has a six hour design compressive strength of 2000 psi.

B. Medium Voltage Power System, JFK and LGA Airports:

1. Medium voltage (over 600 volts) switchgear, transformers, and splicing chambers, that are installed indoors, shall be installed in Electrical vaults.

2. The incoming service shall be designed with a minimum of two (2) feeders (except as described in Section 'A -1' above), with automatic switch-over operation. The service shall be either:

   a. Primary Selective
   b. Secondary Selective
   c. Primary and Secondary
   d. Selective Spot Network

3. Primary selective switchgear shall be arranged with a mechanically interlocked tie switch to allow one feeder to supply the entire load. Medium voltage switchgear shall be as manufactured by the S&C Company.

4. Each incoming service switch shall be provided with a grounding switch, arranged to ground the incoming feeder (line side of switch). Mechanical Interlocks shall be provided to prevent closing the grounding switch if the feeder is energized. Kirk Key Interlocking System shall be provided for the incoming equipment (Load Interrupter Switch(s), Grounding Switch(s), Low Voltage Main Breaker(s)) in compliance with the "Interlocking and the Grounding" procedures at a specific airport and specific application. The interrupting rating shall be 270MVA for JFK International Airport and 180MVA for LaGuardia Airport.

5. All incoming feeders shall be copper conductor, EPR insulated, Flat Strap Cable (FSC), in accordance with PA Standard Specification, Section 16121. The main feeder size shall be 500 kcmil or 750 kcmil, as determined by the PA. The minimum tap

size shall be 4/0 AWG. Cables shall be manufactured by a factory approved by Con Edison.

6. For indoor installations, transformers shall be dry type, vacuum pressure impregnated. For outdoor locations, transformers shall be cast coil construction (primary and secondary).

7. The Tenant's drawings shall include a complete one-line diagram showing all primary connections, switching and interlocks; power sources, routing and feeder designations; size and type of feeder and conduit; KVA rating; types and voltages of all transformers; and all load data in justification of the amount of power requested. The load letter shall be prepared and submitted to PA in the format similar to utility company letters and should provide a break down of major types of loads, indicate the largest motor load, total anticipated demand, etc.

8. Shop drawing and/or catalog cuts for the medium voltage cables, splices and terminations shall be submitted for approval.

9. PA specifications for the medium voltage installation shall be used.

10. A short circuit current calculation and coordination study for the proposed power system shall be submitted for review.

11. Each incoming service shall be provided with required PA approved metering current transformers (CT's) and potential transformers (PT's). The CT's and PT's shall be connected to the primary side of the incoming feeders.

12. Dual power sources with automatic transfer from both Incoming feeders' metering PT's shall be provided for the totalizer.

13. Provide a fire-treated plywood backer board for mounting the required meter plans and other metering devices including conduits, fittings, and wires for the installation of PA meters and totalizer. Metering equipment to be installed outdoors shall have a NEMA Type 3R enclosure. Meters and totalizer will be provided by PA and shall be installed by the Tenant.

14. Underground conduits to be used for the medium voltage power distribution system shall be concrete encased fiberglass reinforced epoxy (FRE). Minimum conduit size shall be five-inch. Provide twenty percent spare (empty) conduits, but not less than two in each duct bank. Duct banks of alternate

feeders shall be separated by a minimum of twenty feet and terminated in separate manholes.

15. Between manholes in the medium voltage power system, the total bending radius for underground duct banks shall not exceed 90 degrees and shall utilize wide sweeps.

16. Calculations of maximum pulling tension for all medium voltage cable to be installed into the underground duct banks shall be submitted for review.

17. All manholes shall be designed as per PA standards. See Section 18, Attachment E1. Size of manhole shall be determined based on the number and size of cables, wires, and conduits allowed. For areas where a PA standard manhole is not appropriate, submit a proposed manhole design including all dimensions and design calculations for review.

C. Network Protector Compartments, Transformer Vaults, and Bus Rooms:

1. Roofs and floors shall be constructed of reinforced concrete with a minimum thickness of 6 inches. Exposed metal decking shall not be allowed in transformer vault and network protector compartment ceilings. The compartment or vault shall be designed as a waterproof structure if any part of it is external to the building. There shall be no penetrations through the ceiling of any kind.

2. Walls shall be constructed of 8-inch concrete block with voids filled with cement mortar. Two fire rated (three hour) steel doors shall be provided for each compartment or vault. One door shall open to a public corridor or lobby and shall be fire rated and accessible at all times. The other shall open to the adjacent compartment or vault. Reinforcement bars shall clear all conduits into the network protector compartment by at least 4 inches.

3. Building steel shall clear all conduit and bus openings by at least 8 inches in order to prevent induced heat build-up in the steel members. All steel shall be encased with a minimum of 2 inches of concrete. Nothing shall be installed above the network bus. No conduits, wires, pipes, ducts, etc. shall enter or pass through the vault or compartment that are not specifically required for the operation of the vault. All ducts entering the network protector compartment shall be non-metallic.

4. Aspiration type smoke detectors shall be provided for the network compartment. The smoke detection equipment shall be located outside of the compartment and only the aspiration tube shall enter the compartment to allow maintenance to be performed without entering the compartment.

5. Forced air ventilation shall be installed and maintained including controls and alarms. All ventilation for transformer vaults shall be directly to outside air. Ventilation opening to interior spaces shall have three hour fire rated dampers.

6. Separation of network compartment from associated transformer vaults shall not exceed twenty-five feet.

7. Each network protector shall be installed in a separate compartment.

D. Port Authority Bus Terminal: See Section 18, Attachment E2.

E. Electrical Systems for Tenants at Port Authority Owned Buildings:

1. General:

a. Design, fabrication, installation, and performance of the work shall comply with the manufacturer's recommendation, applicable codes and all applicable provisions of this Manual.

b. All tenancies shall be metered.

c. All Port Authority tenant circuit power wiring shall emanate from the Port Authority electrical closets/rooms. These closets/rooms shall be available in each Building on a floor-by-floor basis. Electrical closets/rooms shall contain distribution panelboards for lighting and receptacle outlet circuits and for all other related electrical equipment circuits.

d. Local switch control for tenant lighting is permitted and is installed in many areas as an energy conservation measure. Tenants are encouraged to provide such switching at their own expense, especially full floor tenants who are metered electrically and can realize energy savings by using local switch control.

e. Ground rods shall be copper, ¾" diameter, and ten feet long. Ground cables shall be soft-drawn copper, Class 'B' stranding and connected to the ground rods by exothermal welds.

f. Electrical closets shall have 2-duplex receptacles (one on an Emergency power circuit and the other on a normal power circuit).

g. No splices or joints shall be permitted in either feeders or branches except at outlets or accessible terminal, splice or junction boxes.

h. All convenience type receptacles shall be of the grounding type.

i. All motors ½ HP and above shall be rated three phase 460 Volts.

j. All conduit runs shall contain an insulated ground wire, sized in accordance with the Code.

k. All wiring for power, lighting and control shall be in conduit. Conduits located in mechanical spaces, electrical rooms, encased in concrete, or at any locations subject to physical damage, shall be threaded rigid galvanized steel.

l. Minimum conduit size shall be ¾".

m. Unless otherwise specified, all conduit shall be installed concealed in finished areas.

n. Minimum conductor size for power wiring shall be #12 AWG.

o. All wires shall be identified by circuits in all cabinets, boxes, wiring troughs and other enclosures, and at all terminal points, i.e., receptacle, etc.

p. Top entries of conduits into electrical enclosures located in areas subject to water or condensation shall not be permitted.

q. For areas designated for demolition, disconnect from the power source and remove all existing electrical devices,

lighting fixtures, and associated conduit and wiring, etc., unless noted as existing to remain. All abandoned conduit and wiring shall be removed back to the overcurrent device serving the demolished circuit.

2. Electrical Power Distribution Equipment:

   a. Low voltage switchgear shall be metal enclosed. Low voltage (below 600 V) power circuit breaker switchgear built in accordance with ANSI/IEEE Standards C37.20 shall have copper buses and shall have as a minimum the following meters: volts, amperes (phase to phase and phase to neutral), frequency, ampere demand (one/phase and one average three phase), kilowatts hours, kilowatt demand, power factor, harmonic load content and (percent (THD), and be UL listed.

   b. Panelboards shall have a main circuit breaker, 100% neutral bus, ground bus, copper buses, bolt-on type line circuit breakers, and be UL listed. Each panelboard shall contain at least 25% additional space for future circuits, single pole breakers shall not be ganged to form multipole breakers and 'Series' rated equipment shall not be acceptable.

   c. Where a high concentration (60% or more) of harmonics creating loads (PCs, laser printers, electronic ballasts, VSD's, UPS's, or other similar type equipment) relative to other non-harmonic loads is anticipated, the following shall be provided: full size individual branch circuit neutrals, 200% panelboard neutrals, 'K' rated transformers, separate dedicated circuits for printers and PC's.

   d. Major electrical equipment, such as switchgear, transformers, and motor control centers and control panels shall have integral ground buses connected to the station ground grid at two diagonally opposite locations.

   e. Electrical panels, motors and other equipment, where required, shall be grounded utilizing an insulated ground wire connected in accordance with the manufacturer's recommendations. All clamps, connectors and other hardware used with the grounding system shall be made of copper.

F. Electronics and Radio systems:

1. PA Public Safety Radio Systems: Any tenant construction involving interior space modifications or building/terminal expansions shall modify the existing Port Authority Public Safety in-building radio antenna system. New buildings shall install new in-building antenna systems. The system typically consists of RF booster based signal regeneration and a suitable in-building antenna system to provide 97% coverage reliability. Submittals shall include complete design details and calculations subject to approval. Such antenna systems shall not be integrated with common carrier wireless communications systems.

2. Wireless communications systems:

   a. Tenant unlicensed wireless systems design shall be identified with the operating frequencies, the height and locations of antennas, the antenna effective radiated power, and the associated equipment. Interference issues shall be coordinated.

   b. Tenant licensed wireless systems design shall be identified with the operating frequencies, the height and locations of antennas, the antenna effective radiated power, RF interference study and the associated equipment. Outdoor radiation shall be submitted with coverage maps. Wireless systems shall not interfere with PA radio systems.

3. Command and Control Centers: Emergency communications capability with the Port Authority Public Safety shall be incorporated in Tenant command and control centers. Critical alarms shall be relayed to the Port Authority Public Safety through the Tenant's security reporting mechanism.

4. Airport Intrusion Detection System: Any tenant alterations or new construction introducing changes to boundaries between air-side and land-side spaces shall include supplementary changes to the PA Perimeter Intrusion Detection System.

5. Public Address System: Any tenant public address system coverage shall remain within the designated tenant space and

operate at lower volume levels relative to surrounding PA public address system.

III. DETAILS OF ELECTRICAL REVIEW

The following are representative of items reviewed:

A. Existing code violations in areas affected by the work.

B. The power distribution system (feeders, switchgear, transformers, panels and over-current protective devices), including coordination of plans regarding connections and available capacities with PA utilities. A one-line diagram giving source identification, conductor types and sizes, connected and demand loads, basis of source capacity, voltage drop, and adequacy of over-current protection shall be presented. Characteristics of special loads, e.g., large motor loads, shall be detailed. Key- and mechanical- interlocks shall be shown, identifying operational procedures for energizing, de-energizing and grounding of medium voltage equipment.

C. Obstruction, envelopment or elimination of electrical ducts, vaults, manholes, and hand-holes by new construction.

D. All materials and apparatus shall have been tested and approved for the proposed use by the agency or testing laboratory recognized in the relevant jurisdiction. See Section 14 of this Manual.

E. Coordination with other trades such as:

1. Architectural: Place of assembly lighting; electric door locks; exit signs; egress lighting; fire stopping

2. Structural: Suspension of lighting fixtures; weight of storage batteries

3. Mechanical: Ventilation and cooling of electrical rooms; diffusion of battery gases; fire and smoke detection for air handling systems

4. Environmental: PCB removal

5. Civil: Underground utilities

F. Wiring methods (conductors and raceways)

G. Grounding, including system grounding of derived systems such as transformers and generators

H. Communications wiring with regard to radiation, electromagnetic interference, electrical safety, and fire hazards

I. Signal wiring and emergency power for fire alarm and detection systems

J. Emergency power for lighting, exit lights and signs, Life Safety Equipment (HVAC & Smoke Purge) and opening protectives

K. Computer room disconnecting means for electronic and HVAC equipment

L. Code limitations on plastic light diffusers and Port Authority standard for plastic signs

M. Alarm, detection, and visible and audible alerting devices. See Section 12 of this Manual

N. Physical safety, such as clearances around equipment, and exit provisions from within electric rooms

O. Telephone installation shall not have any components in common with the power or lighting installation

P. The coordination of fire detection and fire suppression provisions with designs for open wiring such as in computer rooms and raised floors. For guidance, see NEC Article 645.

Q. Transformers and capacitors that are PCB-contaminated or PCB-filled shall be identified

R. Any operation, including repairs, that can possibly cause PCB to spill, must be coordinated with the Facility Manager

1. The Tenants shall comply with the requirements of:

2. Toxic Substance Control Act (Federal)

S. Regulations of federal, state, and local environmental protection agencies

T. Energy conservation

This page is intentionally left blank.

I. GENERAL

The scope of the mechanical review will be for compliance with the Applicable codes, regulations, and standards listed in Section 3 of this Manual, and Port Authority design criteria listed below, and will include the installation and alteration of service equipment and systems.

The following is a representative list of systems reviewed:

A. Heating, ventilating, air conditioning, and refrigeration

B. Smoke control and purge systems

C. Fire suppression systems and controls

D. Handling and storage of gases or fluids that are volatile, combustible, flammable, toxic or corrosive

E. Pressure vessels, fired and unfired

F. Industrial processes. Bulk storage and distribution of fuel and gases (glycol, LPG, LNG, etc.)

G. Airport fuel distribution systems

H. Energy conservation

I. Water recovery processes

J. Control of methane under buildings

K. Cargo handling equipment (ETV, etc.)

L. Emergency generators, fuel tanks, and piping

II. STANDARDS

ANSI	American National Standards Institute:
B-30.13	Storage/Retrieval (S/R) Machines and Associated Equipment
B-31.1	Power Piping
B-31.3	Process Piping
B-31.4	Pipeline Transportation Systems for Liquid Hydrocarbons and Other Liquids
B-31.9	Building Services Piping
API	American Petroleum Institute:
5L	Steel Line Pipe
600 Series	For Pumps, Valves, etc.
1104	Welding of Pipelines and Related Facilities
ASHRAE	American Society of Heating, refrigerating and Air-Conditioning Engineers, Inc.
ASME	Boiler and Pressure Vessel Code
PEI	Petroleum Equipment Institute - Recommended Practices for Installation of Underground Liquid Storage Systems
SMACNA	Sheet Metal and Air Conditioning Contractors' National Association

III. PORT AUTHORITY DESIGN CRITERIA

A. Airports Aircraft Fueling Service:

1. Work affecting the airport fuel distribution system shall be coordinated with the existing airport system for compatibility, surge pressure safety, and system design check. Depending on the nature of the modification, surge pressure calculations may be required.

2. All automatic control valves shall be performance tested in compliance with the PA Engineering Department's initial contract requirements for the airport fuel systems.

3. Valving at fuel storage tank connections and at truck loading racks, beneath surge suppressors or hydrant valves shall be constructed with supplemental fire rated safety stop valves. These safety stop valves shall be closed by fusible link action

upon exposure to fire, and shall conform to UL or API Fire Tested Valve Safety Standards.

4. For the protection of building walls around pressure surge suppressors see Section 5.II.B.1.e of this Manual.

5. For the protection of the ramp drainage inlets see Section 8.II.C.2.c of this Manual.

B. Port Authority Bus Terminal: See Section 18, Attachment M1 for HVAC Design Criteria.

C. General:

PVC piping shall not be used above ground within buildings.

IV. DETAILS OF MECHANICAL REVIEW

The following are representative of items reviewed:

A. Existing code violations in areas affected by the work.

B. General system design:

1. Coordination of all new work with existing conditions

2. Materials, operating and safety controls, equipment approval

3. New controls interface with existing control system

4. Requirements for system and equipment testing and inspection

C. Specific System Design:

1. HVAC:

a. Shaft requirements for pipes and air ducts

b. Fire/smoke dampers at ducts through rated partitions and floors

c. Installation details for fire dampers or fire/smoke dampers to stay in place if a duct is disrupted. (See SMACNA Fire, Smoke, and Radiation Damper Installation Guide for HVAC systems)

d. Fire detector and smoke detector requirements for fan systems to shut down associated fans and close fire/smoke dampers automatically and transmit a signal to the local and central fire alarm control systems

e. Fire resistive insulation materials

f. Air filters in ventilating systems

g. Ventilation Schedule

h. Smoke control systems

2. Commercial type cooking/equipment: Grease ducts, extractors, dampers, insulation, fixed pipe fire extinguishing systems in hoods and ducts

3. Noise and vibration control

4. Energy Conservation: Building envelope analysis, design criteria, and thermal performance of component systems

5. Bulk storage of liquids and gases: Tanks, piping, supports, anchorage, clearances, electrical grounding, Fire Department regulations, and leak detection

6. Battery Charging Spaces:

   a. The components of the charging system shall be approved in accordance with the requirements outlined in Section 14 entitled “Materials and Equipment Approval and Inspection” of this Manual where the system is to be located.

   b. An adequate ventilation (exhaust) system shall be designed to prevent the accumulation of an explosive mixture of gases in the battery room under the worst conditions of battery and/or charger failure.

I. GENERAL

The scope of the plumbing review shall include the installation of and alteration to the following systems, in accordance with the applicable codes, regulations, and standards listed in Section 3 of this Manual, and Port Authority design criteria listed below.

A. Water supply and distribution

B. Sanitary and storm drainage and disposal

C. Industrial wastes

D. Sprinklers

E. Fire standpipes

F. Compressed air, vacuum and natural gas piping

II. STANDARDS

A. National Sanitation Foundation approval for Kitchen equipment

B. See Section 3 of this Manual

III. PORT AUTHORITY DESIGN CRITERIA

A. General:

1. PVC piping shall not be used above ground within buildings.

2. Fire standpipe hose shall be approved 100% synthetic single jacket fire hose.

3. Clamps for no-hub piping shall be those manufactured by Clamp-all Corp, Huskey SD series 4000 or approved equal.

4. All hubless pipes shall be anchored at each side of hub and at five (5) foot intervals.

5. In demolition work, unused piping shall not be abandoned in place. Piping shall be removed back to source or point of discharge, and the resulting openings plugged and sealed. Such work shall be shown on the drawings.

6. Oil separator effluents shall be discharged into the sanitary sewer system.

7. Toilet rooms with two or more plumbing fixtures shall be provided with floor drains.

B. Port Authority Bus Terminal: See Section 18, Attachment M2 for Plumbing and Fire Protection Design Criteria.

IV. DETAILS OF PLUMBING REVIEW

The following are representative of items reviewed:

A. Load calculations, complete layout and riser diagrams.

B. Existing conditions and systems shall be shown in sufficient detail to enable the review of proposed alterations.

C. Specifications for materials, equipment, fixtures, insulation, installation, procedures, etc.

D. Existing code violations in areas affected by the work.

E. The following is a partial list of items to be shown in the design documents:

1. Plumbing:

a. Floor plans showing the location, layout and spacing of all plumbing fixtures, the summation of plumbing loads; the size, location, and material for all building sewers and drains, and the soil, waste, vent, water, compressed air, vacuum and natural gas distribution piping

b. Riser diagrams showing:

i) Story heights
ii) All plumbing fixtures with diagrammatic arrangement of their connections to soil, waste, and vent piping

iii) Fixture units and all soil, waste, and vent stacks from the point of connection with the building drain to their termination above the roof

iv) All leader and storm water piping from the point of connection with the building drain to the roof drain with the corresponding square footage

v) All potable and non-potable water from the point of connection within the building to the fixtures and/or equipment

vi) Natural gas, vacuum and compressed air

c. All appurtenant equipment with access, including but not limited to: pumps, ejectors, waste tanks, meters, backflow preventers, irrigation systems, oil and grease interceptors, main control valves and piping shall be indicated clearly on the plans.

2. Fire Standpipe:

a. Floor plans showing the location and size of all risers, cross-connections, hose station (cabinet/racks), valves, siamese connections, source of water supply, piping, and other essential features of the system.

b. Riser diagrams showing the essential features of the system and indicating on the risers: riser control valves, cross-connections, hose valves, siamese connections, tanks, pumps, sources of water supply, pipe sizes, capacities, floor heights, zone pressures, and other essential data and features of the system.

c. The available water pressure at the top and bottom floors of each zone, and at each floor where the weight of pipe fitting changes, shall be shown on the riser diagram.

3. Sprinkler/Fire Protection System:

a. All sprinkler work submitted for review shall include the following:

i. A key plan identifying location of valve assembly controlling the sprinkler system protecting the area in the scope.

ii. Existing available flow rates and pressures, which will form the basis of the hydraulic calculations.

iii. Background shall indicate all column numbers, room names, ceiling heights and soffit conditions.

b. The location and size of water supplies and the location, spacing, number, and type of sprinklers to be used, with approximate location and size of all feed mains, risers, riser control valves, control valves, siamese connections, and other essential features of the system.

c. A diagram showing the proposed sprinkler system in relation to principal construction features of the building, such as its size, walls, columns, and partitions, and such other information as may be necessary for the evaluation of the system.

d. The location, number, and type of any electrical or automatic devices to be used in the system.

e. The available water pressure at the top and bottom floors of each zone shall be shown on the riser diagram.

f. Hydraulic calculations with all pertinent information as required by NFPA 13.

g. Other fire suppression systems. Plans for chemical or gaseous fire suppression piping systems shall contain the type of extinguishing agent and number and size of agent containers; size, length, and type of all piping that will be used; number and location of all fusible links or detectors and the temperature setting.

I. GENERAL

The scope of the review shall include the design of various fire detection, alarm, and suppression systems for compliance with the applicable codes, regulations, and standards listed in Section 3 of this Manual, and Port Authority design criteria listed below.

II. PORT AUTHORITY DESIGN CRITERIA

A. The National Fire Protection Association Standards (NFPA) and other referenced standards may be used for work in areas not covered by applicable municipal codes, subject to review and approval by the Port Authority.

B. Where an automatic sprinkler system is required by code in a building or space, sprinklers must also be provided in the following areas:

1. Electrical equipment rooms, rooms containing electrical equipment, or electrical closets, so that sprinkler protection is provided throughout the building.

2. Concealed conveyor spaces inaccessible to firefighting equipment shall be provided with a sprinkler system above the conveyor assembly. Spaces over all types of ceilings are considered inaccessible.

C. Schedule 40 galvanized piping shall be used for dry pipe sprinkler systems.

D. Fire Alarms:

1. The Tenant fire alarm systems serving the areas outside of the Port Authority responsibility shall be interconnected with the Port Authority base building or facility wide fire protection system.

2. The Tenant fire alarm systems shall be designed to control all systems and equipment installed by the Tenant and shall be fully integrated into the building or complex fire protection system to support HVAC, smoke purge, and life safety fire response procedures.

The Fire Alarm System annunciation and communication between the Port Authority and the Tenant Fire Alarm System shall satisfy the following requirements:

a. The Tenant's fire alarm panel shall be of the same manufacturer as the Port Authority Base Building Fire Alarm System or shall be an approved equal that is fully compatible.

b. The Tenant shall engage the Port Authority's fire alarm system maintenance contractor to furnish and install the interface connection to the Port Authority's fire alarm system.

c. The Port Authority's fire alarm system maintenance contractor shall be responsible for coordinating his work with the PA facility Tenant liaison office.

d. The Tenant shall provide all conduit, wiring, and interconnections.

e. The Tenant's fire alarm system shall transmit all addressable points to the Port Authority's fire alarm system in order to provide the complete status of all alarms, supervisory and trouble signals.

f. The audible and visual devices in the Tenant's leasehold shall be fully integrated with the Port Authority Base Building System and work in conjunction with Port Authority audible and visual devices so that all devices in a fire zone are activated simultaneously.

3. General System requirements:

a. The Tenant's fire alarm system shall be fully addressable and comply with all requirements for installation as identified by applicable codes and standards. A fully addressable fire alarm system shall be able to clearly identify the type of alarm, the location of origin, and the status of the system and device.

b. The Tenant's fire alarm system must be compatible with and able to extend the Port Authority Base Building Voice Evacuation System.

c. The fire alarm system shall consist of class ‘A’ style ‘7’ signaling line circuits, class ‘A’ style ‘Z’ notification appliance circuits, and class ‘A’ style ‘D’ initiating device circuits. The entire fire alarm system and each major component such as zones, loops, circuits, panel components, power supplies, etc. shall have a minimum of 20% spare capacity.

d. All fire alarm conduits shall have a #10 AWG ground wire.

e. Field wiring for initiation and/or notification circuits or loops shall be installed in dedicated conduits, pull box or enclosure.

4. Existing fire alarm systems must be made compatible with central station alarm monitoring systems. New or altered fire alarm systems must be fully addressable and compatible with the central station monitoring system.

5. All fire alarm signals shall be transmitted to a central station monitoring system by approved methods. Facility specific requirements must be included in signal transmission.

6. Any additions, alterations, replacements, or new installations of any fire detection, suppression, or signalling system at an existing PA facility shall require the complete fire alarm system to conform to the latest edition of the municipal Building and Fire Codes.

E. For Port Authority Bus Terminal, see Section 18, Attachments M1 and E2 for smoke and fire detection requirements.

III. DETAILS OF FIRE PROTECTION REVIEW

The following are representative of items reviewed (See Section 11.IV.E.2 and 3 for additional items):

A. Sprinkler, water mist, and other systems using dry chemicals, foams, gaseous, and other extinguishing agents shall be shown on drawings, signed and sealed by the Architect or Engineer of record.

B. Plans for sprinkler systems must provide all information and data required by NFPA including water-sources, supply pressure, number and type of sprinklers (manufacturer, model, etc.), fire department

connections, hazard classification, alarm devices and supervisory connections.

C. Hydraulic calculations shall be submitted for all work involving new systems, upgrade of existing sprinkler system design demands, existing system alterations of over 20 sprinkler heads, or changes to existing systems that affect design remote locations.

D. A complete Fire Alarm riser showing locations of all fire alarm control panels, power booster panels, interface modules, detectors, manual pull stations, visible and audible alerting devices, conduit and wiring sizes, etc., shall be provided.

SECTION 13 **PROTECTION FROM AIRPORT RAMPSIDE FUEL SPILL FIRE**

I. GENERAL

The following are minimum guidelines for the design of protective measures to reduce the hazard of a ramp-side fuel fire. Codes and regulations listed in Section 3 of this Manual, where applicable, shall serve as the minimum design criteria.

II. STANDARDS

The National Fire Protection Association (NFPA) standards shall be used, where applicable. The following are representative NFPA standards to be used in conjunction with PA design criteria (see paragraph III for Design Criteria):

A. Terminal Buildings, Satellites, Fingers, Aircraft Loading Bridges, etc.:

1. NFPA 407: Aircraft Fuel Servicing - Proximity of vent and fill points to air intake points on the building and the proximity of the building to fueling hydrants, cabinets, and pits.

2. NFPA 415 — Airport Terminal Buildings, Fueling Ramp Drainage, and Loading Walkways:

   a. Special provisions for below-grade areas to be protected from fuel and vapor penetration

   b. Distance and protection of heating and ventilation openings on the building, and openings to certain mechanical rooms, from points of potential fuel or vapor release

   c. Exit doors discharging onto ramps shall be marked “EMERGENCY EXIT ONLY”

   d. Protection of window glass when potential fuel spill points (pfsp) are within 100 feet (also see paragraph IV.A.1)

   e. Proximity of aircraft fueling ramp drainage points to structures and ramp gradients

f. Aircraft loading walkways

III. PORT AUTHORITY DESIGN CRITERIA

A. See Section 18, Attachment RFS1.

B. Terminal Buildings, Satellites, and Fingers:

The exterior walls of the building shall be protected as follows:

1. There shall be no potential fuel spill points (pfsp) such as fueling hydrants, catch basins, fuel tank fill connections, etc., within 50 feet of the building.

   Exception:
   Aircraft may be positioned with a minimum distance of 25 feet from the building to the aircraft fuel system vents or fuel tank openings provided that there are no combustion and ventilation air-intake to any boiler, heater, or incinerator room within 50 feet of the vent or tank openings. Exit doors or exit stairs opening onto the apron within 50 feet of pfsp must be protected by a full height radiation barrier.

2. Large areas of window glass, covering more than 50% of a wall, which has a distance of less than 100 feet from a pfsp, shall be protected by means of an automatic system of water curtain or fire shutters activated by an appropriate fire detection system.

   Note:
   In determining the above percentages, only that portion of the wall not backed by the building's structural components should be included. Also, the distance from the pfsp shall be measured horizontally to the center of the wall.

C. Aircraft Loading Walkways:

1. The design shall provide a safe exit route from the aircraft for a period of at least five (5) minutes under severe fire exposure conditions, equivalent to a free-burning jet fuel spill fire, in compliance with NFPA 415. The Engineer-of-record shall certify compliance in writing and submit the test reports and computations as defined in NFPA 415 to demonstrate compliance.

2. Loading Walkways shall be designed to prevent sudden failure (collapse, explosion, or development of excessive smoke and gases) during the ten (10) minute test.

3. Walkways shall comply with the following:

   a. A maximum travel length of 150 feet. Portions exceeding 150 feet shall be designed as part of the terminal building.

   b. A minimum width of 44 inches or the width of the aircraft door being served, whichever is larger.

   c. Non-slip floor covering

   d. Emergency lighting.

   e. Light diffusers of plastic material shall be of an approved type for exits, or wired glass shall be used.

4. Compliance shall include:

   a. Structural integrity of the walkway under the fire conditions. For structural criteria see Section 6 of this Manual.

   b. Integrity of flexible closures, slat curtains, and miscellaneous seals with weather-stripping curtain with respect to smoke penetration through cracks and openings shall be established.

      Particular attention must be paid to the following details:

      i) There shall be no direct path for flame or smoke between the exterior and the interior of the bridge.

      ii) The junctures of bridge components, such as hinge pins and slat curtains, shall be covered or sealed with appropriate fire resistant material.

   c. The positive pressure ventilation fan shall be of sufficient capacity to provide and maintain a positive pressure throughout the bridge and shall be automatically activated anytime that an aircraft is at the bridge.

5. The door opening into the walkway shall have an electrical interlock to prevent opening until the walkway is engaged with the aircraft.

6. The aircraft loading walkway shall not be located over any drainage outlets. See NFPA 415.

7. The electrical installation shall comply with the applicable requirements of the National Electrical Code, particularly with the Hazard requirements; i.e., presence of flammable vapors from aircraft fueling, venting, and storage points.

8. The hydraulic and electrical system for the walkway shall be demonstrated to be fail-safe.

I. GENERAL

The purpose of this section is to outline:

A. The requirements for acceptance (approval) of materials, assemblies, forms, methods of construction, and the intended use of equipment.

B. The requirements for inspection of materials, assemblies, and construction.

II. NEW YORK CITY

A. Approval/Acceptance of Materials, Equipment, etc.:

1. Construction documents shall identify all materials proposed to be used, including identification of the test method to which they conform, and where applicable, supporting information or test data attesting to such conformance shall be submitted.

2. No material, assemblies, forms, method of construction, equipment, machinery, and devices, which are regulated by the provisions of the code, will be acceptable for the intended use unless:

   a. It is tested and approved for use in accordance with the specific provisions of the codes and rules of the New York City Department of Buildings.

   b. Or, previously approved by the New York City Board of Standards and Appeals (BS&A) or by the Materials and Equipment Acceptance (MEA) Division of the New York City Department of Buildings.

   c. Complete test data or MEA or BS&A resolutions of approval shall be submitted along with other documents. Manufacturers' or distributors' letters are not acceptable. See Article 113 of Chapter 1 of Title 28 of the Administrative Code of the City of New York for specific requirements.

B. Special Inspection:

1. All items subject to “special inspection” shall be listed on the title sheet of the construction documents, or the sheet immediately following. See Administrative Code of the City of New York, Section 28 - 104.7.7.

2. All materials, equipment, and construction designated by the Code for "special inspection" shall be inspected and/or tested by a special inspection agency registered with the New York City Department of Buildings and employ special inspectors with the required qualifications.

3. See Section 18, Attachment INSP1 for the list of items subject to special inspections, as well as the relevant Code sections, where applicable. Effort has been made to make this list as inclusive as possible. Other items subject to special inspection, as required by the NYC Building Code, that have been omitted in this list must also comply.

III. NEW JERSEY

A. Approval/Acceptance of Materials, Equipment, etc.:

1. Acceptance of materials, assemblies, equipment, forms, methods of construction, etc., shall be based on certified test reports from approved agencies. See Building, Mechanical and other sub-codes of New Jersey Uniform Construction Code (NJUCC).

2. See NJUCC, Section 5:23-4.26 for certification of building elements, such as trusses, fire walls, fire separation walls, wall panels, pre-stressed/pre- fabricated floor or roof panels and pre-engineered structural frames.

B. Special Inspection (New Jersey Uniform Construction Code Section 5:23-2.20):

1. All “special inspections” shall be made and required by the Code shall be made and conducted under the supervision of the Registered Architect or Professional Engineer (A/E of record) retained by the Tenant.

2. All items subject to "special inspection” shall be listed on the title sheet of the plans, or the sheet immediately following.

3. See Section 18, Attachment INSP2 for the list of items subject to "special inspection of critical construction components." Effort has been made to make this list as inclusive as possible based on the current sub-codes adopted by the NJUCC. Other construction items subject to "special inspection", as required by these codes that have been omitted in this list, must also comply:

IV. NEW YORK STATE

A. Approval/Acceptance of Materials, Equipment, etc.:

1. Acceptance of materials, assemblies, equipment, forms, methods of construction, etc., shall be based on certified test reports from approved agencies. See Building Code of New York State, Chapter 17.

B. Special Inspection (Building Code of New York State):

1. The Tenant or the Registered Architect or Professional Engineer (A/E of record) retained by the Tenant shall employ one or more special inspectors (with minimum qualifications, as per the Building Code of the State of New York, Table 1704.1) to provide inspections for items that are designated by the Code for "special inspection."

2. All items subject to "special inspection" shall be listed on the title sheet of the plans, or the sheet immediately following.

3. See Section 18, Attachment INSP3 for the list of items subject to "special inspection of critical construction components." Effort has been made to make this list as inclusive as possible based on the current code. Other construction items subject to "special inspection", as required by the code that have been omitted in this list, must also comply.

This page is intentionally left blank.

I. GENERAL

The scope of the environmental review shall include asbestos and lead paint inspections and abatement plans, soil excavation management plans, dewatering plans, subsurface investigations, waste identification and disposal plans, site remediation, underground storage tank installation, testing, repair or removal; air emission sources, and storm water management. Documents will be reviewed for compliance with applicable codes, regulations and standards.

The following types of documents shall also be submitted to the Port Authority:

A. Best Management Plans

B. Spill Plans

C. Storm water Management Plans

D. Subsurface Investigation Reports and Remedial Action Reports

E. Permit Applications and Regulatory Approval Request letters

F. Asbestos/Lead Abatement Drawings and Specifications

G. All official correspondences with regulatory agencies

II. RULES, REGULATIONS, AND PROGRAMS

The following federal, state and local environmental laws, regulations, and programs, as applicable, shall be complied with:

A. Federal:

1. Clean Air Act

2. Clean Water Act, including Underground Storage Tank and Spill Regulations

3. Federal Insecticide, Fungicide, and Rodenticide Act

4. Noise Control Act

5. Occupational Safety and Health Act

6. Resource Conservation and Recovery Act

7. Toxic Substances Control Act

8. National Environmental Policy Act

B. New York City:

1. Administrative Code of the City of New York

2. Asbestos Control Program

3. Department of Sanitation Codes

4. New York State Department of Environmental Conservation Programs

5. New York State Environmental Quality Review Act

C. New Jersey State:

1. New Jersey Administrative Code

2. Industrial Site Recovery Act (ISRA)

3. NJ Department of Environmental Protection Program

III. STANDARDS

A. Port Authority Standard Specifications for Asbestos Removal

B. Port Authority Standard Specifications for Lead-based Paint Removal

C. American Petroleum Institute Guidelines

IV. DETAILS OF ENVIRONMENTAL REVIEW

The following are representative of items reviewed:

A. Asbestos/Lead Management:

1. Building Surveys

2. Abatement Plans and Specifications including: Dimensions, isolation barriers, location of decontamination systems, exhaust locations, waste storage, negative air unit calculations, emergency exits, and detail abatement procedures

3. Federal and State Notifications

4. Health and Safety Plan signed by a Certified Industrial Hygienist

B. Soil Excavation Management Plans:

1. Quantity of soil to be excavated, disposed off site, and reused on site

2. For off site reuse/disposal; off site facility acceptance criteria, State permit or approvals allowing off site facility to accept excavated soil

3. Soil tests completed, summary table comparing analytical results with state reuse criteria and/or disposal facility criteria

4. Dewatering plans/permit/approvals

5. Waste Manifiest/Bill of Lading for soil transported off site

6. Health and Safety Plan signed by Certified Industrial Hygienist

C. Underground Storage Tanks:

1. New tank installation Plans and As-Built Drawings signed by State Licensed Professional Engineer, including certification statement on as-built drawings stating that storage tanks installed are in compliance with State Regulations

2. Tank registration forms/renewals

3. Results of tank tests, monitoring and inspection logs

4. Tank closure regulatory notification, revised registration form, closure plan and closure report

5. Tank repair documentation

This page is intentionally left blank.

I. GENERAL

The scope of the corrosion control/cathodic protection review includes an examination of the cathodic protection, coatings and other related systems design drawings, specifications, and computations for all metallic structures exposed to underground, marine, or atmospheric environment, (including atmospherically exposed reinforced concrete) in regard to their compliance with the codes, standards, and Port Authority Criteria.

II. RULES AND REGULATIONS

A. Federal:

1. Environmental Protection Agency: 40 CRF Parts 280 and 281

2. Department of Transportation: Title 49, Parts 191, 192, 193 and 195

B. New York:

New York State Department of Environmental Conservation: 6NYCRR Parts 612, 613, 614

C. New Jersey:

New Jersey Department of Environmental Protection: N.J.A.C. 7:14B.

III. STANDARDS

A. NACE International Standards: RP 0169, RP0193, RP 0285

B. ASTM Standards: G3, G4, G5, G51, G57, G97, and G102

IV. PORT AUTHORITY CRITERIA

A. The design of all Corrosion Control/Cathodic Protection Systems shall be performed by a NACE International ("NACE") certified Corrosion Specialist or Cathodic Protection Specialist.

B. The cathodic protection systems shall be compatible with the

existing systems at the PA facility.

C. The design of the systems shall take into account the presence of stray currents and their impact on existing and proposed structures, and the impact of connecting structures into existing cathodically protected structures. All tenant hydrant fueling systems shall be electrically isolated from the PA fueling mains.

D. The design shall take into account the monitoring requirements for compliance with the respective state agencies and federal regulations for corrosion control. Provisions shall be made to allow the effectiveness of all installed dielectric isolation devices(flange isolation kits, etc.) to be tested periodically without the need for confined space entry into vaults, etc.

E. In New York, all cathodic protection systems shall be registered with the "Greater New York Corrosion Committee" and in New Jersey, all cathodic protection systems shall be registered with the "New Jersey Committee on Corrosion.

F. All cathodic protection system designs and commissioning tests for fuel storage facilities in New Jersey shall be performed by an individual certified by the State of New Jersey as a Corrosion Specialist, in accordance with the requirements of Subchapter 13 of N.J.A.C. 7:14B of the New Jersey Department of Environmental Protection rules for underground storage tank facilities.

G. All cathodic protection systems shall be energized and tested by a NACE certified Corrosion Specialist or Cathodic Protection Specialist. A report shall be prepared and submitted to the Port Authority. The report shall document all settings, protection levels, and the impact of stray currents on all nearby structures. Recommendations for mitigation of said interference effects shall be included.

H. Where proposed utility pipelines will run in proximity (within 100 feet) of DC-powered traction systems, provisions shall be incorporated into the design of the structures to measure the effects of stray currents on those structures.

V. DETAILS OF CORROSION CONTROL / CATHODIC PROTECTION REVIEW

The following are representative of items reviewed:

A. Calculations and reports shall include, but not be limited to, the following:

1. Result of a risk assessment of new utilities to be constructed, taking into account the risk factors associated with a failure of the structure, including public safety, interruption of facility operations, and cost of repairs/replacement of the utility structures.

2. For fuel transfer pipelines and aboveground storage, citation of the specific regulatory requirements for corrosion protection that apply to that facility or structure.

3. Where fuel storage facilities in New Jersey are involved, certification of individual and firm by the New Jersey Department of Environmental Protection shall be provided for review.

4. Results of a corrosion site investigation, including soil resistivity testing, chemical analysis of soil samples at proposed structure depth, and stray current testing. Also, a review of previous data and corrosion control designs by the Port Authority or others, with conclusions regarding how to best coordinate proposed and existing systems.

5. Cathodic protection design basis including design life assumptions, maintenance requirements, current density assumptions and other extraordinary factors that would impact on system performance and/or life. If proposed structures are to be connected to existing structures that are cathodically protected, the impact on the existing cathodic protection system by the interconnection shall be considered. The proposed approach to the incorporation of the new structure(s) into the existing cathodic protection system shall be clearly laid out, including procedures to evaluate the effectiveness of the overall cathodic protection system both prior to and after the interconnection of the structures.

6. Evaluation of alternative system materials and installation configurations and consideration of the life cycle cost of each alternative.

7. Consideration of stray current effects on existing structures in the area of the proposed structures, and provision of test facilities to allow for the testing of the severity of those effects on the structures to allow for 1) additional mitigation of the stray current or, 2) report of the significant stray current that require maintenance of the transit system's stray current control

provisions designed to keep stray current generation to a tolerable level.

8. Evaluation of requirements for electrical bonding continuity.

B. Plans shall include, but not be limited to:

1. Location and plot plan with lease lines, showing all the coordinates.

2. All underground utility service lines (proposed and existing).

3. Plan of all cathodic protection system components, interconnections, test station locations.

4. Details of all systems components, including but not limited to anodes, junction boxes, rectifiers, test facilities, remote monitoring facilities, and stray current monitoring and control provisions.

5. Locations where new structures are to be electrically isolated from existing structures to maintain efficient cathodic protection current distribution characteristics.

6. Electrical bonding continuity requirements for mechanically joined pipelines.

C. Specifications shall include, but not limited to:

1. The scope of work and materials required for the construction of the proposed cathodic protection systems.

2. Qualifications for the installation contractor and the cathodic protection specialty contractor, including the appropriate certified corrosion specialist.

3. Specialized installation methods to be used to install an effective and reliable cathodic protection system.

4. Testing and monitoring requirements for the systems to insure the proper operation of both new and existing systems for the life of the system. The test procedures for documentation of the effectiveness of the existing cathodic protection system shall be clearly indicated, along with requirements to document that the combined system is effective in meeting NACE criteria for cathodic protection after the new system is installed and energized.

5. Testing requirements to evaluate the stray current interference effects of new cathodic protection systems on any other underground metallic structures, and to recommend the required mitigative measures. Also requirements to measure the effects of stray current on the new structures.

This page is intentionally left blank.

SECTION 17 TRAFFIC

I. GENERAL

The scope of the traffic review shall comprise an examination of the design drawings and specifications for compliance with the latest applicable standards, including those of the Port Authority, and a review of the operational characteristics of the site with regard to vehicular and pedestrian movements. The design documents associated with Traffic Engineering shall be related to both permanent-type traffic improvements and/or temporary controls for work zones involving construction, maintenance, or incident management operations (commonly referred to as 'maintenance and protection of traffic').

II. STANDARDS

A. Federal – Applicable to all Facilities:

1. Federal Highway Administration (FHWA):

   a. Manual on Uniform Traffic Control Devices (MUTCD)

   b. Traffic Control Devices Handbook (TCDH)

   c. Standard Highway Signs

   d. Standard Alphabets for Highway Signs and Pavement Markings

   e. Standard Color Tolerance Charts

   f. Standard Specifications for Construction of Roads and Bridges on Federal Highway Projects

   g. Railroad-Highway Grade Crossing Handbook

2. Transportation Research Board (TRB):

   Highway Capacity Manual, Special Report 209

3. American Association of State Highway and Transportation Officials (AASHTO):

a. A Policy on Geometric Design of Highways and Streets.

b. Roadside Design Guide

c. Standard Specifications for Highway Bridges

d. Guidelines for the Selection of Supplemental Guide Signs for Traffic Generators Adjacent to Freeways

e. Guidelines for Geometric Design of Very Low-Volume Local Roads (ADT $\leq$ 400)

f. Highway Safety Design and Operations Guide

g. Standard Specifications for Structural Supports for Highway Signs, Luminaires, and Traffic Signals

4. Institute of Transportation Engineers (ITE):

a. Standard for Vehicle Traffic Control Signal Heads.

b. Standard for Pedestrian Traffic Control Signal Indications

c. Standard for Flashing and Steady Burn Barricade Warning Lights

d. Standard for Traffic Signal Lamps

e. Trip Generation Manual

f. Turning Vehicle Templates

g. Traffic Signing Handbook

h. Design and Safety of Pedestrian Facilities

i. Manual of Traffic Signal Design

j. Standard for Traffic Control Systems

k. National Transportation Communications Intelligent Transportation System Protocol (NTCIP)

5. American Traffic Safety Service Association (ATSSA):

   a. Guidelines for the Use of Portable Changeable Message Signs

   b. Quality Guidelines for Work Zone Traffic Control Devices

6. Americans with Disabilities Act (ADA):

   a. ADA Accessibility Guidelines for Buildings and Facilities (ADAAG)

B. New York:

Highway Design Manual, New York State Department of Transportation (NYSDOT)

C. New Jersey:

1. Design Manual – Roadway, New Jersey Department of Transportation (NJDOT)

2. Standard Roadway Construction/Traffic Control/Bridge Construction Details, (NJDOT)

3. Standard Specifications for Road and Bridge Construction, (NJDOT)

D. Port Authority of NY & NJ (PANYNJ):

1. Traffic Standard Details. See Section 18, Attachment T1 for an index

2. Maintenance of Traffic and Work Area Protection under "General Provisions" (Division 1) of the Specifications

3. Airport Signing Standard Manual (for Airport facilities)

4. Operations and Maintenance Standards, O&M #20, O&M #37, and O&M #73

5. Traffic Signal Design and Drawing Preparation Guidelines

6. Signing and Wayfinding Airport Standards Manual for Pedestrians

Note:
The Traffic Standard Details and other Port Authority standards listed in this section will be provided by the Port Authority Engineering Department's Quality Assurance Division, when required for a specific Tenant project and requested through the facility Tenant liaison office.

E. Other:

1. Parking Structures – Planning, Design, Construction, Maintenance and Repair – by Chrest, et al., Published by Kluwer Academic Publishers, Boston, MA.

III. DETAILS OF TRAFFIC ENGINEERING REVIEW

A. Maintenance of Traffic and Work Area Protection (temporary traffic controls associated with work zones):

1. Plans shall include drawings which depict properly designed temporary traffic control devices wherever a work zone occupies or interferes with the normal operation of:

   a. Any active roadway, ramp, bridge, or tunnel which carries vehicular and/or pedestrian traffic.

   b. Any portion of any parking lot or garage area, driveway, access way, trucking terminal or yard, or loading dock area where there are vehicle and/or pedestrian movements.

   c. Any sidewalk, walkway, concourse, hallway, plaza, doorway, station area or platform, stairway, moving stairway, or elevator where pedestrians have access.

2. Contract documents shall specify 'duration of contract' and 'hours of work'. Based on these parameters, temporary traffic control devices shall comply with all applicable standards.

3. Plans shall indicate where temporary traffic control devices conflict with any permanent control devices, and shall indicate the appropriate action to be taken with the affected permanent devices (i.e., to be removed, relocated, covered, etc.). Notes shall include a provision that any items negatively impacted during construction shall be replaced by the Tenant to the satisfaction of the PA at no cost to the PA.

4. Contract documents shall specify the precautions required to protect vehicles and/or pedestrians from dust, fragments, construction particles, effects of spraying and excessive noise generated by the work operations.

5. Where required, according to the applicable code(s)/standard(s), in conjunction with the temporary control devices, the appropriate lighting devices shall be incorporated in the design.

6. Where required, contract documents shall specify the extent of "flagger operations", to include confirmation of appropriate training, as specified in the Federal MUTCD, Part VI, Temporary Traffic Control.

7. Contract documents shall specify extent of 'daily' and 'end of contract' removal of temporary control devices and include restoration to their original condition and location of any permanent traffic control devices affected during the course of the work.

B. Permanent Traffic Control Devices:

1. Tenant/applicant shall have checked all existing traffic control devices for deficiencies or missing items, and any found, as such, prior to or as a result of the work of the contract, shall be replaced or upgraded.

2. All new and/or existing control devices shall have been checked for visibility and adequate sight distance(s) in daytime and nighttime, also accounting for seasonal variations, such as restrictions caused by growth of vegetation.

3. All new and existing installations shall have been analyzed for the need to incorporate appropriate roadside barriers (e.g., guide rails) in the design.

4. The traffic design shall have been coordinated with other engineering/architectural disciplines, particularly civil, structural, geotechnical, and electrical.

5. With regard to coordination with electrical engineering, wherever required, the permanent control devices and adjacent project areas shall have been designed with illumination levels which meet code standards.

6. When the application includes traffic/roadway modifications and/or changes in traffic demand, the applicant shall have included any of the following, as justified:

   a. A traffic capacity analysis (to determine whether the 'Level of Service' of any nearby roadways is affected). Level of Service (LOS) for all elements of the roadway system (roadways, weaving sections, signalized and un-signalized intersections, pedestrian crosswalks and walkways) shall be equal to or better than LOS "C/D" as defined in the Transportation Research Board Highway Capacity Manual. All closely spaced signalized intersections shall be analyzed both as a coordinated system and as isolated intersections.

   b. A "speed study" (analyzing whether any speed limit change(s) are required).

7. The scope of work to be done in association with the application shall incorporate the results and recommendations of any approved analyses and studies.

8. Any traffic signals impacted during construction must be inspected by the Port Authority Traffic Engineering via a "Turn on Inspection" as well as a "Final Inspection". These checklists will be provided at the beginning of construction.

9. Drawings shall include all pedestrian and vehicular way finding sign layouts.

SECTION 18 ATTACHMENTS

The following attachments in this section include requirements that are supplementary to the requirements in the technical sections of this Manual and are to be complied with.

A1	Standards for Interior Plastic Signs
A2	Specifications Governing the Flammability of Drapery and Curtain Materials in Unsprinklered Areas
A3	Specifications Governing the Flammability of Upholstery Material and Plastic Furniture in Unsprinklered Areas
A4	Specifications Governing the Flammability of Plastic Laminate and Wood Veneer Furniture in Unsprinklered Areas
A5	Marking of Transparent Glass Doors and Fixed Adjacent Glass Sidelights
S1	Plaster Ceiling Design Standards
S2	Suspended Lightweight Ceilings Design Criteria
S3	LaGuardia Airport – Central Terminal Building - Non-structural Concrete Fill Over Cellular Steel Decking
S4	Port Authority Bus Terminal – Lightweight Concrete Slab Areas
C1	Index of Civil Standard Details
C2	Index of Standard Civil Specifications
C3	Index of Civil Design Guidelines
E1	Electrical Manhole and Ductbank Details
E2	Port Authority Bus Terminal – Electrical Design Criteria
M1	Port Authority Bus Terminal – HVAC Design Criteria
M2	Port Authority Bus Terminal – Plumbing & Fire Protection Design Criteria

RFS1	Airport Rampside Clearances
T1	Index of Traffic Standard Details
INSP1	Special Inspection Items - New York City Facilities
INSP2	Special Inspection Items - New Jersey Facilities
INSP3	Special Inspection Items - New York State Facilities
LS1	Landscape Architectural Design At Airports

A1 STANDARDS FOR INTERIOR PLASTIC SIGNS

1.0 General: The provisions of this specification shall govern the design and use of interior plastic signs and panels in both New York & New Jersey.

2.0 Definitions, symbols and notations: The following definitions, symbols and notations shall apply to the provisions of this standard (units in parenthesis are for the variable described):

A_S (ft^2) =	Allowable sign facing area
L (ft) =	The length along the ceiling of a ceiling sign
P_w (ft) =	Minimum distance between an egress path and a sign. Distance can be passage width or height
t (inches) =	Thickness of sign facing material(s)
V_C (ft^3) =	Volume of space or room in which the sign is located

Ceiling sign: A ceiling mounted sign with its top located within one foot of the ceiling and its bottom located five feet or higher above the floor.

Interior plastic sign: A sign, located within a structure, which has a facing which is constructed of plastic.

Multiple-faced sign: A sign with more than one exposed face.

Sign: Any fabricated sign or display structure, including its structure, consisting of any letter, figure, character, mark, point, plane, marquee sign, design, poster, pictorial, picture, stroke, stripe, line, trademark, reading matter or illuminating device, which is constructed, attached, erected, fastened or manufactured in any manner whatsoever so that the same shall be used for the attraction of the public to any place, subject, person, firm, corporation, public performance, article, machine, or merchandise whatsoever, and displayed in any manner for recognized advertising purposes.

Sign facing: The display portion of a sign.

Single-faced sign: A sign with display on one face only.

Volume of Space or Room (V_c): The volume between physical barriers which may limit the movement of fire products (e.g., fire doors in cross corridor partitions). The space shall have a maximum average length to width ratio of 4:1. If the ratio exceeds 4:1, the length of four times the average width shall be used for volume calculation. The volume of a compartment with a ratio exceeding 4:1 shall be calculated by the following equation:

$$4 \times (\text{average width of compartment})^2 \times \text{height}.$$

3.0 Flame Spread Rating: All plastic sign facings shall have a flame-spread rating, determined by ASTM E84, not greater than 200.

Exception: Materials less than 1/28-inch in thickness shall comply with the criteria in NFPA 701, "Flame Tests for Flame-resistant Textiles and Films," or when tested in accordance with ASTM D568, "Standard Test Method for Rate of Burning and/or Extent and Time of Burning of Flexible Plastics in a Vertical Position," exhibit an average burn time for ten specimens of 15 seconds or less and a burning extent of 15 centimeters or less.

4.0 Allowable Sign Facing Area: The area of an individual plastic sign facing shall not exceed the limitations established in paragraph 4.1 through paragraph 4.6, or as calculated in accordance with the Appendix to this standard. The maximum area of all signs in a space shall not exceed 20 percent of the aggregate wall and ceiling area of the space. For multiple-faced signs, the calculated allowable area is the total area of all faces of all signs within separation distances specified in paragraph 4.7. Signs which are separated by less than the minimum sign separation distance as given in paragraph 4.7, shall be considered a single sign.

Exception: The area of an individual plastic sign facing is not limited where the portion of the building, where the sign is located, is equipped with an automatic sprinkler system. However, the 20 percent limitation, in the paragraph above, shall apply.

4.1 Polymethylmethacrylate (PMMA) (e.g., Acrylic, Plexiglass, Lucite) Sign Materials: The allowable area of a PMMA sign facing shall be determined from the following equation.

$$A_s = 0.00034 \cdot \frac{V_c}{t} \quad \Big| \text{for } t \le 0.46 \text{ inch}$$

$$A_s = 0.000745 \cdot V_c \quad \Big| \text{for } t \rangle 0.46 \text{ inch}$$

Example: Given a space (room or compartment) 50' long by 40' wide with a 10' high ceiling, how large a PMMA (acrylic) sign facing is allowable if PMMA is 0.25" thick?

$$A_s = 0.00034 \cdot \frac{(50)(40)(10)}{0.25} = \frac{6.8}{0.25} = 27.2 \text{ sq.ft.}$$

4.2 Polycarbonate (e.g., GE Lexan S100) Sheet Sign Material: The allowable area of a polycarbonate sign facing shall be determined from the following equation:

$$A_S = 0.00031 \cdot V_C$$

4.3 Polyethylene Teraphthalate (PET) (e.g., IMPET 300) Sign Material: The allowable area of a PET sign facing shall be determined from the following equation:

$$A_S = 0.0000759 \cdot \frac{V_C}{t} \quad \Big| \text{for } t \le 0.41 \text{ inch}$$

$$A_S = 0.000185 \cdot V_c \quad \Big| \text{for } t > 0.41 \text{ inch}$$

4.4 Duratrans - Glossy Sign Facing Material: The allowable area of a Duratrans sign facing shall be determined from the following equation:

$$A_s = 0.000046 \cdot \frac{V_c}{t} \quad \Big| \text{ for } t \le 0.043 \text{ inch}$$

$$A_s = 0.00108 \cdot V_c \quad \Big| \text{for } t \rangle 0.043 \text{ inch}$$

4.5 Duratrans Matte Finish Sign Facing Material: The allowable area of a Duratrans matte finish sign facing shall be determined from the following equation:

$$A_s = 0.0000224 \cdot \frac{V_c}{t} \quad \Big| \text{for } t \leq 0.0576 \text{ inch}$$

$$A_s = 0.000389 \cdot V_c \quad \Big| \text{for } t \rangle 0.0576 \text{ inch}$$

4.6 Other Plastic Sign Materials: The allowable area of a sign facing constructed from a plastic material not listed in paragraphs 4.1 through 4.5, or from composites of plastics, shall be determined in accordance with the Appendix to this standard. The method in the Appendix may also be used for plastics listed in paragraphs 4.1 through 4.5.

4.7 Sign Separation Distances: The minimum separation distance between any two individual signs shall be in accordance with paragraphs 4.7.1., 4.7.2, and 4.7.3. Signs located less than the minimum sign separation distances apart shall be considered as one sign for allowable sign facing area.

Exception: Sign separation distances do not apply where the signs are located in a space equipped with an automatic sprinkler system.

4.7.1 Single-Faced Sign Separation Distances: The minimum separation distance between two adjacent signs with a single side of sign facing shall be 6 feet.

4.7.2 Multiple-Faced Sign Separation Distances: The minimum separation distance between two signs with multiple faces on different planes shall be 13 feet.

4.7.3 Ceiling Sign Separation Distances: Signs greater than 10 feet in length and one foot in height shall have a minimum separation distance of 10 feet, except as noted in 4.7.2. Other signs shall conform to Sections 4.7.1.

4.8 Minimum Dead End Passage Width for Signs: Minimum passage width applies to dead end corridors and rooms having means of egress in locations requiring an occupant to pass by a sign. The minimum passage width shall be 20 feet in locations where an occupant must pass a single-faced sign, and 28 feet in locations where an occupant must pass a multiple-faced sign to exit. The minimum passage width (P_w) is defined as the minimum distance between an egress path and a sign, i.e., the closest an occupant will be to the sign during egress. The minimum passage width or height (for ceiling signs) where an occupant must pass by a sign which is perpendicular to the occupants path of travel shall be calculated from the following equation:

$$P_w = 0.00255 \cdot L^{3.654} \quad \Big| \quad \text{for } L \geq 2 \text{ ft}$$

Exception: There is no restriction for signs less than 4 square feet in area and ceiling signs less than 2 feet long.

Calculation of Allowable Sign Area for Signs of Any Plastic Material or Composite of Plastics.

A.1 Definitions, symbols and notations: The following definitions, symbols and notations shall apply to the provisions of this Appendix (units in parenthesis are for the variable described):

A_S (ft^2) =	Allowable sign facing area.
A_1 (ft^2) =	Initial allowable sign facing area based on Figure A-1.
A_2 (ft^2) =	Corrected allowable sign area based on the time to burn through a sign.
$\Delta H_{c,40}$ (kJ/kg) =	Heat of combustion for an incident heat flux of 40 kW/m^2.
L (ft) =	The length along the ceiling of a ceiling sign.
$\dot{m}''_{40}$ ($kg/s\text{-}m^2$) =	The average specimen mass loss rate of the fuel per unit area with a radiant flux exposure of 40 kW/m^2. Mass loss rate shall be determined in accordance with average horizontal specimen mass loss rate in ASTM E- 1354.
P_w (ft) =	Minimum distance between an egress path and a sign. Distance can be passage width or height.
t_b (sec) =	Time to burn through a specimen, used to correct allowable areas for thin signs.
t (inches) =	Thickness of sign facing material(s).
V_c (ft^3) =	Volume of space or room in which the sign is located.
$\sigma_{m,40}$ (m^2/kg) =	Specific extinction area, on a mass loss basis for an incident heat flux of 40 kW/m^2.
ρ (kg/m^3) =	Density of sign material.
SP (1/s) =	Smoke production factor used to determine uncorrected sign area based on volume.

A.2 All plastic sign facings shall meet the flame spread rating criteria specified in paragraph 5.0. All test results and material properties used in the following calculations must be submitted for approval.

A.3 The allowable area of a sign facing constructed from plastic materials shall be determined in accordance with the following procedure. The procedure is applicable for all plastic materials including those listed in paragraphs 4.1 - 4.5.

1. Obtain the sample mass density ρ, in kg/m³.

2. Obtain the following from ASTM E 1354:

   a) The average specimen mass loss rate per unit area for an incident heat flux of 40 kW/m² ($\dot{m}''_{40}$).

   b) The average specific extinction area for an incident heat flux of 40 kW/m² ($\sigma_{m,40}$).

   c) The average effective sample heat of combustion for an incident heat flux of 40 kW/m² ($\Delta H_{C,40}$).

3. Calculate the material's smoke production factor (SP):

$$SP = \sigma_{m,40} \cdot \dot{m}''_{40}$$

4. Using Figure A-1 and the appropriate values of SP and V_C, estimate the value of A_1.

5. The initial corrected allowable area of a combustible sign facing (A_2) based on the thickness of the material shall be calculated using the following formulas:

$$A_2 = \frac{600}{t_b} \cdot A_1$$

where t_b is determined by the following formula:

$$t_b = 0.0254 \cdot \frac{\rho \cdot t}{\dot{m}''_{40}}$$

Exception: If t_b is greater than 600, then a corrected area is not required, i.e., $A_2 = A_1$.

6. The final allowable area of a combustible sign facing (A_S) based on the heat release rate properties of the combustible materials shall be calculated using the following formula:

$$A_s = \frac{452}{\dot{m}''_{40} \cdot \Delta H_{c,40}} \cdot A_2$$

Exception: If $\dot{m}''_{40} \cdot \Delta H_{c,40}$ is less than 452.0 kW/m², a corrected area is

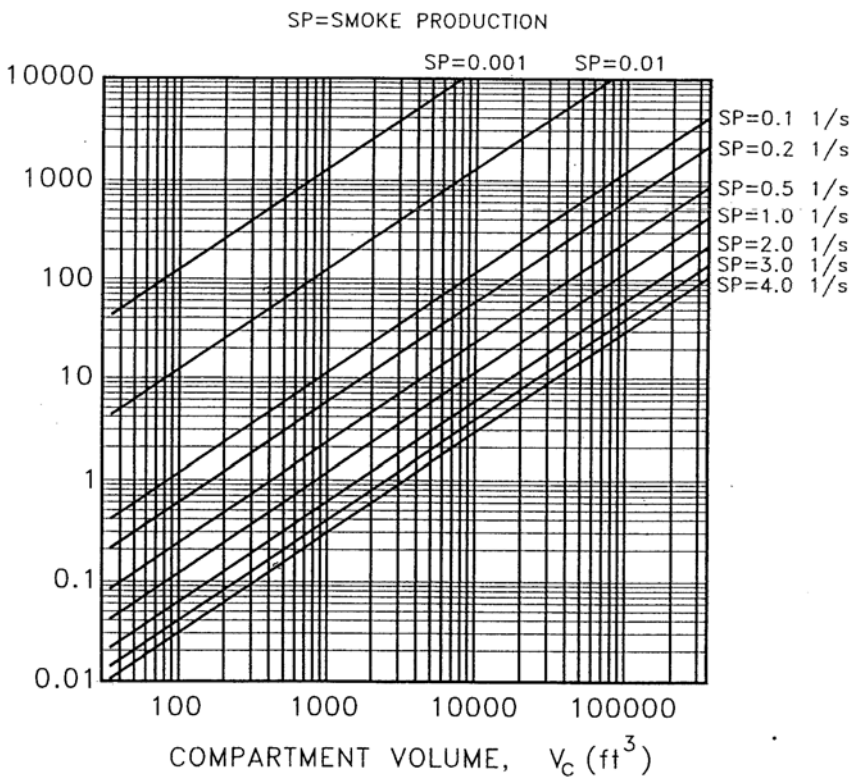

Figure A-1
Allowable Sign Area as a Function of the Smoke Production and Room Volume

not required, i.e., $A_S = A_2$.

7. Allowable facing area of composite sign materials shall be determined in the same fashion as signs with single materials. Material properties of the composite sign ($\dot{m}''_{40}$, σ_m, ΔH_c, ρ) shall be a weighted average of each component mass material. For example, material properties of a composite with two materials shall be determined via where 1 and 2 refer to materials number

$$\dot{m}''_{40} = \frac{mass_1}{mass_{total}} \cdot \dot{m}''_{40,1} + \frac{mass_2}{mass_{total}} \cdot \dot{m}''_{40,2}$$

$$\sigma_m = \frac{mass_1}{mass_{total}} \cdot \sigma_{m,1} + \frac{mass_2}{mass_{total}} \cdot \sigma_{m,2}$$

$$\Delta H_c = \frac{mass_1}{mass_{total}} \cdot \Delta H_{c,1} + \frac{mass_2}{mass_{total}} \cdot \Delta H_{c,2}$$

$$\rho = \frac{mass_1}{mass_{total}} \cdot \rho_1 + \frac{mass_2}{mass_{total}} \cdot \rho_2$$

one and two.

This page is intentionally left blank.

A2 SPECIFICATIONS GOVERNING THE FLAMMABILITY OF DRAPERY AND CURTAIN MATERIALS IN UNSPRINKLERED AREAS

A. All drapery and curtain materials, including linings, shall be subject to the vertical flame tests as required by Federal Aviation Regulation FAR 25.853(a) and Appendix F, revised February 2, 1995.

The test method requires that the flame shall be applied for 12 seconds and then removed, that the average char length shall not exceed eight (8) inches, that the average flame time after removal of the flame specimen shall not continue to flame for more than five (5) seconds after falling.

B. The manufacturer of the finished item shall submit written certification for each component fabric of the completed items as follows:

1. If the material contains 100% fibers that are inherently flame resistant by virtue of the physical properties of the untreated fiber, a written certification by a recognized independent testing laboratory, attesting to the permanent flame resistant properties of all the fibers within, shall be submitted to the Port Authority.

2. If the material contains fibers which are not inherently flame resistant in the untreated state, a written certification by a recognized independent testing laboratory shall be submitted to the Port Authority, attesting that the treated materials have maintained their flame resistant properties, as determined by the burn test in paragraph A above, after five (5) washings and/or dry cleanings. The washing test procedure shall be performed as defined by the Technical Manual of the American Association of Textile Chemists and Colorists (AATCC) Test Method 124-1978 using the wash temperature of 120° ±5°F and the "Tumble Dry" procedure. The dry cleaning test procedure shall be performed by subjecting the material to dry cleaning in a "Coin-OP" machine as manufactured by Norge or Westinghouse or an equal machine. The size sample of material and the machine size are to be commensurable to each other. When necessary, dummy pieces of material shall be added to the test specimens to make up a load equal to the machine rating.

This page is intentionally left blank.

A. All upholstery materials, including covering, interliner, lining, webbing, cushioning, and padding shall be subject to the vertical flame test as required by Federal Aviation Regulation FAR 25.853(a) and Appendix F, revised February 2, 1995.

The test method requires that the flame be applied for 12 seconds and then removed, that the average burn length shall not exceed eight (8) inches, that the average flame time after removal of the flame source shall not continue to flame for more than an average of five (5) seconds after falling.

Test samples subject to the vertical test shall be tested using the thickness of the material as used in the finished product; except that, the maximum thickness of a test sample shall be one-half inch (1/2") in cases where the final product material exceeds that thickness.

B. Padding that exceeds one-half inch (1/2") thickness and all cushioning, in addition to meeting the requirements of Section A above, shall be tested in accordance with the Standard Test Method for Surface Flammability of Materials Using a Radiant Heat Energy Source - ASTM E162-94. Wire mesh screen and aluminum foil shall be used as indicated in Section 5.8.1 of this standard test method.

1. Padding and cushioning with a flame propagation index not exceeding 100 is acceptable for use with an external covering that meets the requirements of Section A of this specification.

2. Padding and cushioning with a flame propagation index exceeding 100 may be covered with materials or interliners complying with paragraph A of this specification. However, the final assembly of these materials which make up the cushion, arm rest, or other parts of the furniture, shall be subject as a composite unit to Standard Test Method ASTM E162-94. Composite assemblies with a flame spread index not exceeding 100 will be acceptable.

C. All self-supporting plastic materials shall be subject to the vertical flame test as required by FAR 25.853(a) and Appendix F. The test method requires that the flame be applied for 60 seconds and then removed, that the average burn length shall not exceed six (6) inches, that the average flame time after removal of the flame source shall not exceed 15 seconds, and that drippings from the test specimens shall not

continue to flame for more than an average of three (3) seconds after falling.

D. The thickness of the materials and of the composite assemblies tested under paragraphs B and C above shall be the same as the thickness used in the finished item. Certification submitted by the manufacturer shall indicate the thickness of the materials as tested.

E. The manufacturer of the finished item shall submit a certification by a recognized, independent, testing laboratory of the results of the tests specified above and of the service life of the flame retardancy of a treated material or a certification that the flammability characteristics of the material are inherent therein by virtue of the chemical properties of the material. Treated material may be used only when the certified flame retardant service life exceeds that of the planned service life of the finished item.

A. Test and Criteria:

1. Flame spread indices for this specification shall be determined by either ASTM-E-84 or ASTM-E162. Flame spread indices shall not exceed 25.

2. The vertical flame test shall be performed in accordance with Federal Aviation Regulation, FAR 25.853(a) and Appendix F, revised February 2, 1995. This test method requires that the flame be applied for 12 seconds and then removed, that the average burn length shall not exceed eight (8) inches, that the average lame time after removal of the flame source shall not exceed 15 seconds, and that drippings from the test specimen shall not continue to flame for more than five (5) seconds after falling.

B. Free Standing Office Partitions:

1. All core and/or structural materials shall be tested and meet the requirements specified in A.1 above.

2. All insulation and covering materials shall be tested and meet the requirements specified in A.2 above.

C. Desk, Tables, Credenzas, Bookcases, etc.:

1. All core and/or structural materials shall be tested and meet the requirements specified in A.1 above.

2. Plastic laminate or wood veneer layer materials having a thickness not greater than 1/28 inch shall be tested and meet the requirements specified in A.2 above.

3. Plastic laminates or veneer layer materials having a thickness greater than 1/28 inch shall be subject to vertical flame test as per Federal Aviation Regulation, FAR 25.853(a) or (c), and Appendix F determined by the PA's Risk Management Division.

4. The application of intumescent coatings to achieve fire resistance shall be reviewed by the PA's Risk Management Division.

D. Certification:

The supplier of the finished item shall submit a certification and test data by a recognized independent testing laboratory of the results of the tests specified above. The certification and tests shall cover the materials supplied in the finished product. Proof of use of UL labeled products meeting the specified flammability criteria will be accepted in lieu of the certification.

1.0 General.

These rules are identical to New York City Board of Standards and Appeals Rule 4-01 and shall be applicable to all new construction at Port Authority facilities, both in New York and New Jersey.

2.0 Definitions.

Sidelights. Fixed panels of transparent glass which form part of or are immediately adjacent to and within six feet horizontally of the vertical edge of an opening in which transparent glass doors are located. For purposes of this section, a sidelight shall consist of transparent glass in which the transparent area above a reference line 18 inches above the adjacent ground, floor or equivalent surface is 80 percent or more of the remaining area of the panel above such reference line.

Transparent glass. Material predominantly ceramic in character which is not opaque and through which objects lying beyond are clearly visible. For the purpose of this section, rigid transparent plastic material shall be construed as transparent glass.

Transparent glass door. A door, Manually or power actuated, fabricated of transparent glass, in which the transparent area above a reference line 18 inches above the bottom edge of the door is 80 percent or more of the remaining area of the door above such reference line

Transparent safety glazing materials. Materials which will clearly transmit light and also minimize the possibility of cutting or piercing injuries resulting from breakage of the material. Materials covered by this definition include laminated glass, tempered glass (also known as heat-treated glass, heat-toughened glass, case hardened glass or chemically tempered glass), wired glass, and rigid plastic.

3.0 Requirements.

1. Transparent glass doors and fixed adjacent transparent glass sidelights shall be marked in two areas on the glass surface thereof.

2. Fixed adjacent transparent glass sidelights 20 inches or less in width with opaque stiles at least one and three-quarters inches in width shall be exempt from the marking requirements.

3. Where the ground, floor or equivalent surface area in the path of approach to a fixed adjacent transparent glass sidelight from either side for a minimum distance of three feet from such sidelight is so arranged, constructed or designed as to deter persons from approaching such sidelight or a permanent barrier is installed in the path of approach, the sidelight shall be exempt from this requirement.

4. Decorative pools, horticultural planting or similar installations shall be considered as indicating that the ground, floor or equivalent surface area is not a path of approach. Planters, benches and similar barriers which are securely fastened to the floor or wall to prevent their removal shall be considered as blocking the path of approach provided they shall be not less than 18 inches in height from the ground, floor or equivalent surface and extend across at least 2/3 of the total width of the glazed area of the sidelight.

5. Fixed adjacent transparent glass sidelights which are supported by opaque sill and wall construction of at least 18 inches above the ground, floor or equivalent surface immediately adjacent shall be exempt from the marking requirements.

6. Display windows in any establishment, building or structure which fall within the definition of a sidelight shall be exempt from the marking requirements if the top of the supporting sill and wall construction is not less than 18 inches above the ground, floor or equivalent surface immediately adjacent and the interior area is occupied with merchandise or similar displays to clearly indicate to the public that it is not a means of ingress or egress.

4.0 Marking locations.

1. One such area shall be located at least 30 inches but not more than 36 inches and the other at least 60 inches but not more than 66 inches above the ground, floor or equivalent surface below the door or sidelight. The use of horizontal separation bars, muntin bars or equivalent at least one and one-half inches in vertical dimension that extend across the total width of the glazed area and are located at least 40 inches but not more than 50 inches above the bottom of the door or sidelight is permitted in lieu of markings.

2. The marking design shall be at least four inches in diameter if circular or four inches in its least dimension if elliptical or polygonal, or shall be at least 12 inches in horizontal dimension if the marking is less than four inches in its least dimension. In no event shall the vertical dimension of any marking including lettering be less than one and one-half inches in height.

   In addition to horizontal muntin bars, separation bars or equivalent, any of the following methods may be used to alert persons to the presence of transparent glass doors and fixed adjacent transparent glass sidelights in their path of movement:

   i) Chemical etching.

   ii) Sand blasting.

   iii) Adhesive strips not less than one and one-half inches in vertical dimension extending across at least two-thirds of the total glazed area.

   iv) Decals.

   v) Paint, gilding or other opaque marking materials.

   vi) Opaque door pulls or push bars extending across at least two-thirds of the total width of the glazed area.

5.0 Replacement and new installations.

1. Any transparent glazing material used for replacement in existing transparent glass doors shall be transparent safety glazing material. Transparent safety glazing material shall be used in all new transparent glass door installations. The manufacturer's permanent identification mark denoting safety glazing materials shall be visible on the glass after installation of the door.

2. Replacement of fixed adjacent transparent glass sidelights shall be of transparent safety glazing material or annealed glass at least one-half inch in thickness. New fixed adjacent transparent glass sidelights shall be of transparent safety glazing material or annealed glass at least one-half inch in thickness. The manufacturer's permanent identification mark denoting safety glazing material shall be visible on the glass after installation of the sidelight.

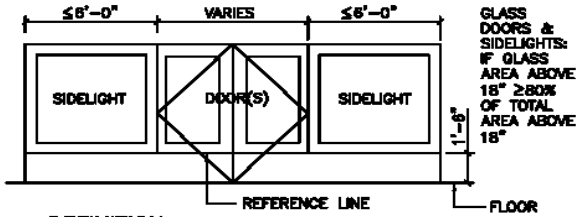

(A) DEFINITION
SECTION 2.0

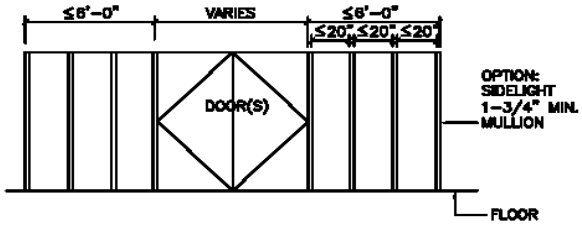

(B) SIDELIGHTS WIDTH
SECTION 3.0.2

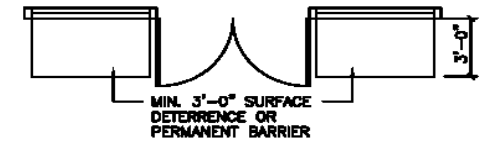

(C) SURFACE DETERRENCE
SECTION 3.0.3

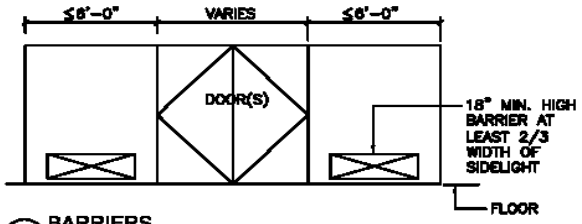

(D) BARRIERS
SECTION 3.0.4

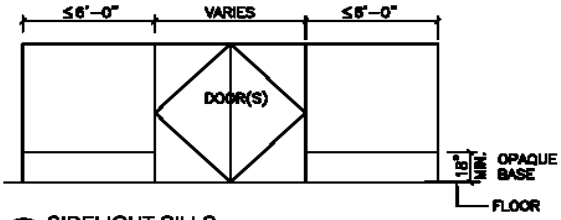

(E) SIDELIGHT SILLS
SECTION 3.0.5

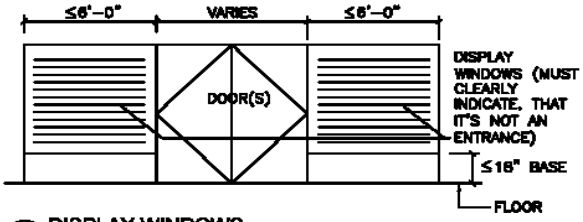

(F) DISPLAY WINDOWS
SECTION 3.0.6

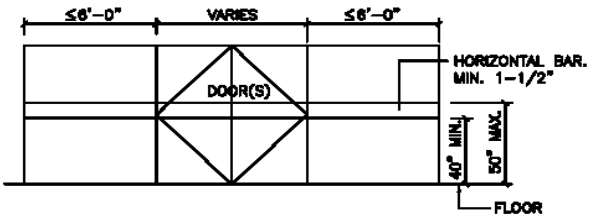

(G) MUNTIN BARS OR EQUIVALENT
SECTION 4.0.1

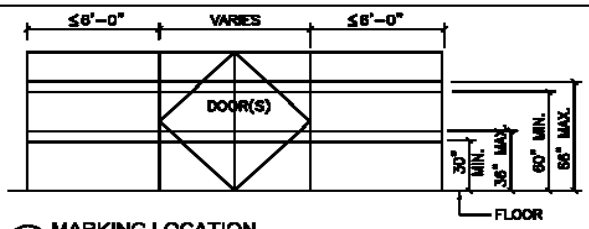

(H) MARKING LOCATION
SECTION 4.0.1

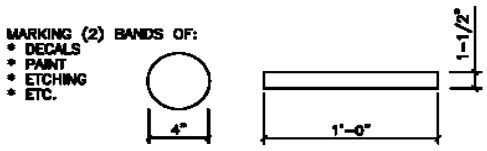

(I) MARKING DESIGN
SECTION 4.0.2

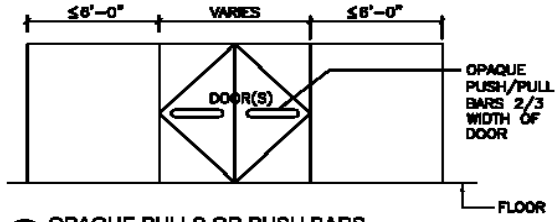

(J) OPAQUE PULLS OR PUSH BARS
SECTION 4.0.2.VI

THE PORT AUTHORITY OF NY & NJ

MARKING OF GLASS DOORS & FIXED SIDELIGHTS

DESIGN CRITERIA FOR INACCESSIBLE HEAVYWEIGHT CEILINGS

I. LOADING

THIS CEILING DESIGN STANDARD APPLIES TO ALL INACCESSIBLE CEILINGS WITH A DEAD LOAD GREATER THAN 4 PSF. FOR INACCESSIBLE CEILING SYSTEMS OTHER THAN CEMENT PLASTER OR GYPSUM PLASTER, THE DESIGNER SHALL FOLLOW ALL THE REQUIREMENTS OF CEMENT PLASTER OR GYPSUM PLASTER CEILING BASED ON THE DESIGN DEAD LOAD OF THE CEILING SYSTEM .

I. LOADING:

A. DEAD LOAD: CEILING DESIGN DEAD LOAD SHALL BE:
CEMENT PLASTER: LARGER OF 15 PSF OR ACTUAL CEILING WEIGHT
GYPSUM PLASTER: LARGER OF 10 PSF OR ACTUAL CEILING WEIGHT
ALL OTHER CEILING SYSTEMS: LARGER OF 15 PSF OR ACTUAL CEILING WEIGHT.

B. LIVE LOAD (LL) : 200LBS CONCENTRATED LOAD (MIN).

C. WIND LOAD (W) : (EXTERIOR CEILINGS ONLY) MINIMUM LOAD SHALL BE:
a. UP TO 50 FT. CEILING HEIGHT: 30 PSF POSITIVE PRESSURE OR 20 PSF SUCTION NORMAL TO SURFACE.
b. HIGHER THAN 50 FT.: USE WIND FORCES IN ACCORDANCE WITH THE APPLICABLE CODES, REGULATIONS AND STANDARDS.
c. EACH CEILING PANEL SHALL BE CAPABLE OF RESISTING A LATERAL WIND FORCE OF 2.5 PSF OR 8.5 PERCENT OF THE POSITIVE WIND PRESSURE, WHICHEVER IS GREATER, ACTING PARALLEL TO THE CEILING SURFACE.

D. LOADING COMBINATIONS: LOAD CONBINATIONS SHALL BE IN ACCORDANCE WITH THE APPLICABLE CODES, REGULATIONS AND STANDARDS.

MINIMUM SIZE OF CARRYING CHANNEL FOR INTERIOR INACCESSIBLE CEMENT PLASTER CEILINGS

TABLE "IP"

'W' AVERAGE \ 'S'	3'-6"	3'-9"	4'-0"	4'-3"	4'-6"
3'-1"	1 1/2" C.R.-[475LBS/ 1000 L.F.				
3'-3"	1 1/2" CHANNEL (HOT ROLLED) MINIMUM WEIGHT = 1120LBS./1000 L.F.				
3'-9"					
4'-0"					
4'-2"			2" CHANNEL (HOT ROLLED) MINIMUM WEIGHT = 1260LBS./1000 L.F.		
4'-6"					

SIZES, SPANS AND SPACINGS SHOWN ARE FOR CEILING SYSTEMS WITH A DEAD LOAD = 15 PSF.

II. MATERIALS

A. IN ADDITION TO THE MATERIALS SPECIFIED IN SECTION IV THE FOLLOWING MATERIAL SPECIFICATIONS SHALL BE FOLLOWED:
1. PLASTER: ASTM C926-81 AND ANSI A42.2.
2. SURFACE APPLIED BONDING AGENTS FOR EXTERIOR PLASTERING: ASTM C932-80.
3. LATH: ASTM C847 AND ANSI A42.3.

B. THE FOLLOWING MATERIALS SHALL NOT BE USED:
1. METAL DECK TABS AND HOOKS.
2. POWER ACTUATED FASTENERS.
3. WIRE HANGERS.
4. STOVE BOLTS.

C. THE CONTRACTOR SHALL BE REQUIRED TO SUBMIT CATALOG CUTS, SAMPLES, LAYOUT DRAWINGS AND DETAILS OF ALL COMPONENTS OF CEILING SUPPORT SYSTEM FOR THE ENGINEER'S APPROVAL PRIOR TO STARTING OF ANY WORK IN THE FIELD.

MINIMUM SIZE OF CARRYING CHANNEL FOR INTERIOR INACCESSIBLE GYPSUM PLASTER CEILINGS

TABLE "IG"

'W' AVERAGE \ 'S'	3'-6"	3'-9"	4'-0"	4'-3"	4'-6"
2'-9"	1 1/2" CHANNEL (COLD ROLLED) MINIMUM WEIGHT = 475LBS/1000 L.F.				
3'-0"					
3'-6"				1 1/2" CHANNEL (HOT ROLLED) MINIMUM WEIGHT = 1120LBS/1000 L.F.	
4'-0"					
4'-6"					

SIZES, SPANS AND SPACINGS SHOWN ARE FOR CEILING SYSTEMS WITH A DEAD LOAD = 10 PSF.

III. JOINTS

A. CONTROL JOINTS:
MAXIMUM LENGTH OF CEILING PANEL BETWEEN CONTROL JOINTS SHALL BE 40 FT. AND MAXIMUM AREA OF THE PANEL SHALL BE 1600 SQ.FT.

B. EXPANSION JOINTS:
LOCATION AND SIZE OF CEILING EXPANSION JOINTS SHALL MATCH BUILDING EXPANSION JOINTS. EXPANSION JOINTS ARE ALSO REQUIRED WHERE CEILING CHANGES DIRECTION.

MINIMUM SIZE OF CARRYING CHANNEL FOR EXTERIOR INACCESSIBLE PLASTER CEILINGS

TABLE "EP"

'W' AVERAGE \ 'S'	3'-0"	3'-3"	3'-6"	3'-9"	4'-0"	4'-6"
2'-1"	1 1/2" CHANNEL (HOT ROLLED) MINIMUM WEIGHT = 1120LBS/1000 L.F.					
2'-4"						
2'-6"			2" CHANNEL (HOT ROLLED) MINIMUM WEIGHT = 1260LBS/1000LBS L.F.			
2'-8"						
3'-1"						
3'-6"					2 1/2" CHANNEL (HOT ROLLED) MINIMUM WT. 2270LBS/1000 L.F.	
4'-0"						

SIZES, SPANS AND SPACINGS SHOWN ARE FOR A CEILING SYSTEM WITH A 15 PSF DEAD LOAD + 20 PSF WIND SUCTION.

THE PORT AUTHORITY OF NY & NJ

INACCESSIBLE HEAVYWEIGHT CEILING DESIGN STANDARDS
FOR CEILINGS WITH A DL GREATER THAN 4PSF
DESIGN CRITERIA

ATTACHMENT S1

SHEET 1 OF 8

IV. DESIGN OF CEILING COMPONENTS

CEILING COMPONENT	DESIGN PARAMETER	INTERIOR CEMENT PLASTER CEILINGS	INTERIOR GYPSUM PLASTER CEILINGS	EXTERIOR CEMENT PLASTER SOFFITS	MATERIALS AND COATINGS	NOTES
WIRE TIES	MAXIMUM SPACING MINIMUM SIZE	6 INCHES 16 GAGE	6 INCHES 16 GAGE	6 INCHES 16 GAGE	STAINLESS STEEL AISI TYPE 304 OR MONEL METAL	a. MIN. DOUBLE LOOP AROUND LATH AND CHANNEL WITH MIN. THREE TWISTED TURNS. b. IN LIEU OF WIRE TIES, BSA* OR ICBO**. APPROVED CLIPS MAY BE USED.
FURRING CHANNEL	MAXIMUM SPAN (DIM. W) MAXIMUM SPACING (DIM. F) MINIMUM SIZE	4'-6" 1'-6" 1 1/2" COLD ROLLED CHANNEL (475LBS/1000 L.F.)	4'-6" 1'-6" 1 1/2" COLD ROLLED CHANNEL (475LBS/1000 L.F.)	4'-6" 1'-6" 1 1/2" COLD ROLLED CHANNEL (475LBS/1000 L.F.)	HOT ROLLED ASTM A36 OR COLD ROLLED CHANNELS, GALVANIZED FOR EXTERIOR AND PAINTED FOR INTERIOR.	a. MAX. DEFLECTION < SPAN/360. b. FURRING CHANNELS AND EDGE CASING BEADS SHALL BE INTERRUPTED AT CONTROL AND EXPANSION JOINTS. c. EDGE CASING BEAD AND EDGE BEAM SHALL NOT BE USED AS SUPPORT FOR CEILING. d. WHERE LIGHT FIXTURE OPENING REQUIRES CUTTING OF ONE FURRING CHANNEL, SUPPORT THE ENDS WITH 1 1/2" CHANNELS. e. WHERE LIGHT FIXTURE OPENING REQUIRES CUTTING OF MORE THAN ONE FURRING CHANNEL, USE CARRYING CHANNELS AND HANGERS ON EACH SIDE OF THE OPENING. f. FURRING CHANNEL SPLICES SHALL BE AS SHOWN ON SHEET 5.
CARRYING CHANNEL	SPACING (DIM. W AVG.) SPAN (DIM.S) SIZE	TABLE 'IP'	TABLE 'IG'	TABLE 'EP'	HOT ROLLED ASTM A36 OR COLD ROLLED CHANNELS, GALVANIZED FOR EXTERIOR AND PAINTED FOR INTERIOR.	a. MAX. DEFLECTION < SPAN/360. b. CARRYING CHANNELS SHALL BE INTERRUPTED AT CONTROL AND EXPANSION JOINTS. c. CARRYING CHANNELS SHALL NOT BE INTERRUPTED FOR LIGHT FIXTURE OPENINGS. d. CARRYING CHANNEL SPLICES SHALL BE AS SHOWN ON SHEET 5.
FURRING CHANNEL TO CARRYING CHANNEL CONNECTION	MINIMUM SIZE	MIN. 3 LOOPS OF 16 GAGE WIRE OR L 1 1/2 X 1 1/2 X 1/4 X 2 1/2" LONG WITH 3/8"ø A307 BOLTS	MIN. 3 LOOPS OF 16 GAGE WIRE OR L 1 1/2 X 1 1/2 X 1/4 X 2 1/2" LONG WITH 3/8"ø A307 BOLTS	MIN. 3 LOOPS OF 16 GAGE WIRE OR L 1 1/2 X 1 1/2 X 1/4 X 2 1/2" LONG WITH 3/8"ø A307 BOLTS. (GALVANIZED)	HOT ROLLED ASTM A36 OR COLD ROLLED CHANNELS, GALVANIZED FOR EXTERIOR AND PAINTED FOR INTERIOR.	SEE DETAIL C FOR TYPICAL DETAIL. BOLTS MAY BE SUBSTITUTED WITH CLIPS APPROVED BY BSA* OR ICBO**.
HANGER CONNECTIONS	MINIMUM SIZE	ONE 3/8"ø BOLT	ONE 3/8"ø BOLT	ONE 3/8"ø BOLT	A307 BOLTS, NUTS AND LOCK WASHER (GALVANIZED)	SEE DETAILS A AND B TYPICAL DETAILS.
HANGER	MINIMUM SIZE MAXIMUM SPACING	1 1/2 X 1/4" STRAP 4'-6" O.C. EACH WAY ACTUAL SPACING DEPENDS ON CARRYING CHANNEL SIZE-SEE TABLE IP	1 1/2 X 1/4" STRAP 4'-6" O.C. EACH WAY ACTUAL SPACING DEPENDS ON CARRYING CHANNEL SIZE-SEE TABLE IG	L 1 1/2 X 1 1/2 X 1/4" 4'-6" O.C. EACH WAY ACTUAL SPACING DEPENDS ON CARRYING CHANNEL SIZE-SEE TABLE EP	HOT ROLLED ASTM A36 STEEL. GALVANIZED FOR EXTERIOR AND PAINTED FOR INTERIOR	FOR CONNECTION TO STRUCTURE SEE SHEETS 6, 7 AND 8. a. HANGER SPLICES SHALL HAVE A MINIMUM OF 2-3/8"ø BOLTS WITH NUTS AND LOCK WASHERS b. HANGER SHALL BE PLUMB. c. MINIMUM THICKNESS OF STEEL MEMBERS FOR EXTERIOR SOFFITS SHALL BE 1/4".
BRACING		NONE REQUIRED	NONE REQUIRED	MIN. TWO BRACES IN EACH DIRECTION PER PANEL		SEE SECTIONS S2 AND S3 ON SHEET 4.

NOTE: IN CASES WHERE ACTUAL LOADS ARE HIGHER THAN SPECIFIED UNDER LOADING (SHEET S1) DESIGN SHALL BE PREPARED IN ACCORDANCE WITH THE REQUIREMENTS OF THE APPLICABLE CODES, STANDARDS AND REGULATIONS.

* BOARD OF STANDARDS AND APPEALS NEW YORK CITY (BSA)
** INTERNATIONAL CONFERENCE OF BUILDING OFFICIALS (ICBO)

THE PORT AUTHORITY OF NY & NJ

INACCESSIBLE HEAVYWEIGHT CEILING DESIGN STANDARDS
FOR CEILINGS WITH A DL GREATER THAN 4PSF
DESIGN CRITERIA (CONTINUED)

ATTACHMENT S1

SHEET 2 OF 8

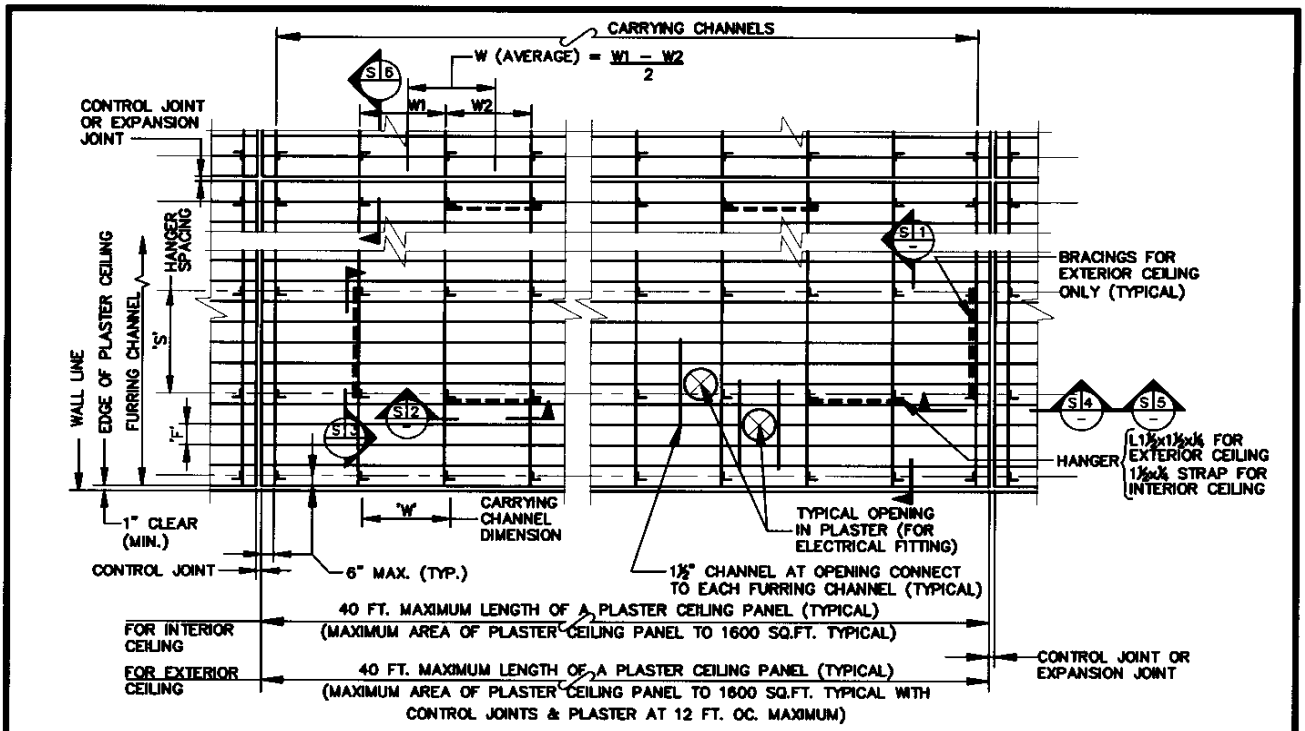

TYPICAL PLAN – EXTERIOR (INACCESSIBLE) PLASTER SOFFIT (SHOWN)
TYPICAL PLAN – INTERIOR (INACCESSIBLE) PLASTER CEILING (SIMILAR)

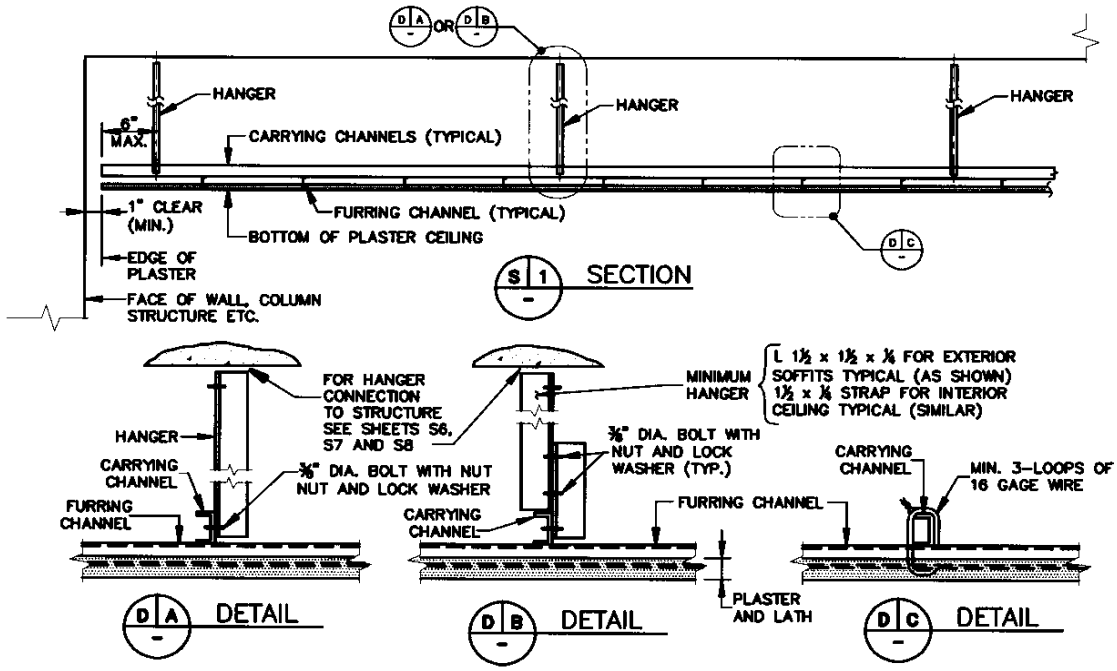

THE PORT AUTHORITY OF NY & NJ	INACCESSIBLE HEAVYWEIGHT CEILING DESIGN STANDARDS FOR CEILINGS WITH A DL GREATER THAN 4PSF TYPICAL DETAILS 1	ATTACHMENT S1 SHEET 3 OF 8

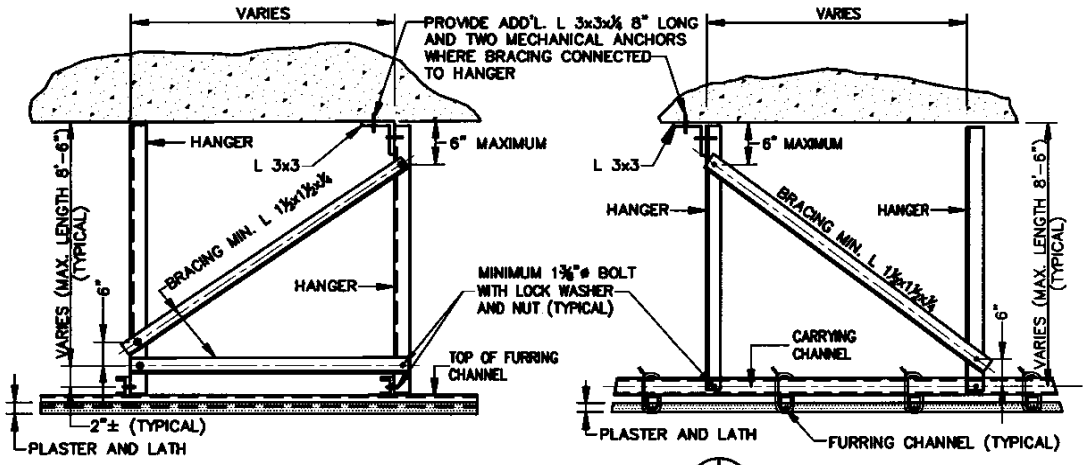

S 2 SECTION

S 3 SECTION

TYPICAL BRACING DETAILS

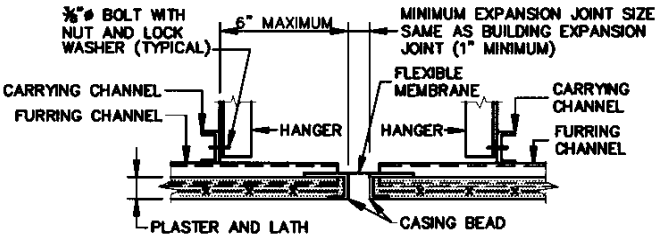

S 4 SECTION

TYPICAL EXPANSION JOINT

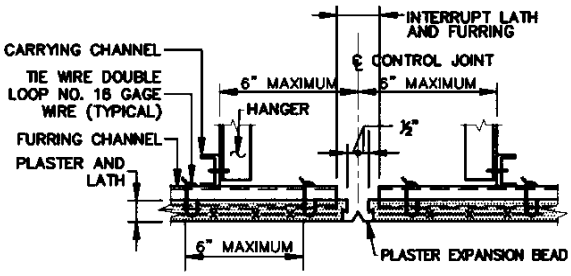

S 5 SECTION

TYPICAL CONTROL JOINT

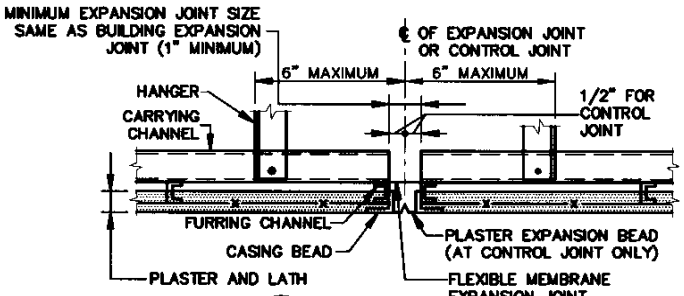

S 6 SECTION

TYPICAL EXPANSION JOINT OR CONTROL JOINT DETAIL

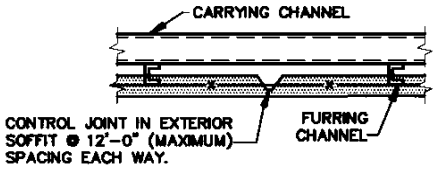

TYPICAL CONTROL JOINT DETAIL IN PLASTER

THE PORT AUTHORITY OF NY & NJ	INACCESSIBLE HEAVYWEIGHT CEILING DESIGN STANDARDS FOR CEILINGS WITH A DL GREATER THAN 4PSF TYPICAL DETAILS 2	ATTACHMENT S1 SHEET 4 OF 8

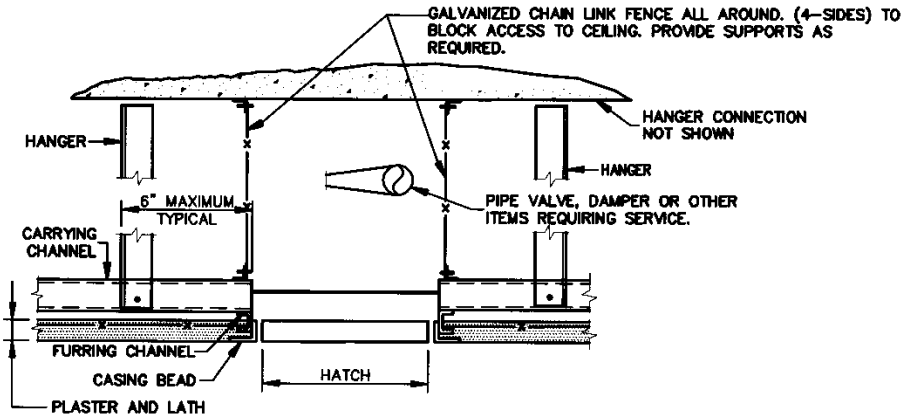

TYPICAL HATCH DETAIL

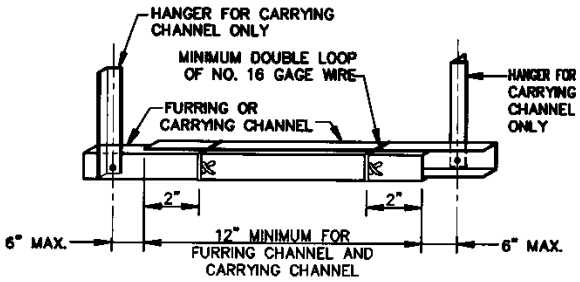

TYPICAL CHANNEL SPLICE DETAIL

THE PORT AUTHORITY OF NY & NJ	INACCESSIBLE HEAVYWEIGHT CEILING DESIGN STANDARDS FOR CEILINGS WITH A DL GREATER THAN 4PSF TYPICAL DETAILS 3	ATTACHMENT S1 SHEET 5 OF 8

TYPICAL DETAILS FOR HANGER CONNECTION TO STRUCTURE

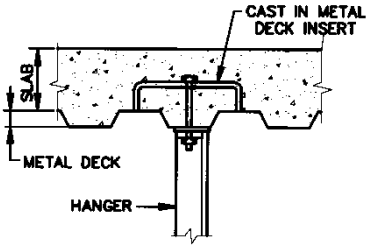

DETAIL – D
IN CONCRETE SLAB
OVER METAL DECK

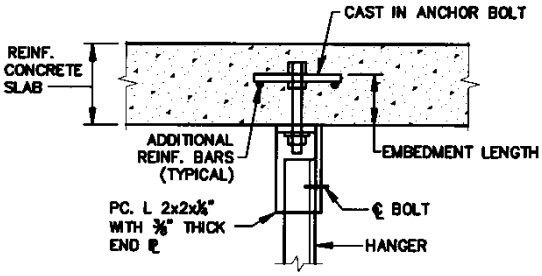

DETAIL – E
CAST IN ANCHOR BOLT IN
CONCRETE SLAB

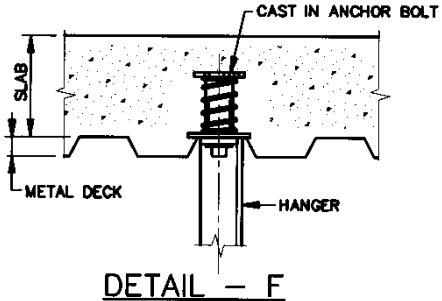

DETAIL – F
CAST IN ANCHOR BOLT IN
CONCRETE SLAB
(OVER METAL DECK)

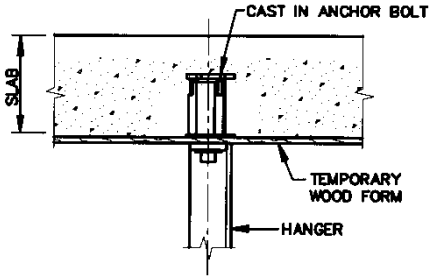

DETAIL – G
INSERT IN CONCRETE SLAB
(OVER TEMPORARY WOOD FORM)

THE PORT AUTHORITY OF NY & NJ	INACCESSIBLE HEAVYWEIGHT CEILING DESIGN STANDARDS FOR CEILINGS WITH A DL GREATER THAN 4PSF TYPICAL CONNECTIONS TO STRUCTURE 1	ATTACHMENT S1 SHEET 6 OF 8

TYPICAL DETAILS FOR HANGER CONNECTION TO STRUCTURE (CONT.)

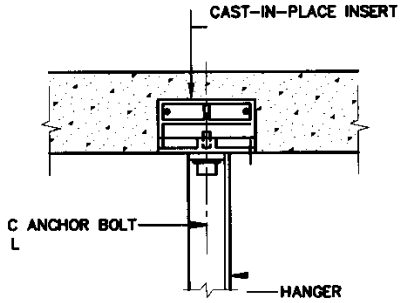

DETAIL – H
INSERT IN CONCRETE SLAB

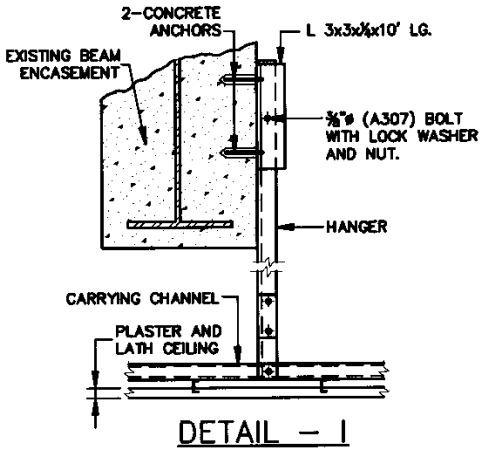

DETAIL – I
CONCRETE ANCHORS IN ENCASED STEEL BEAM

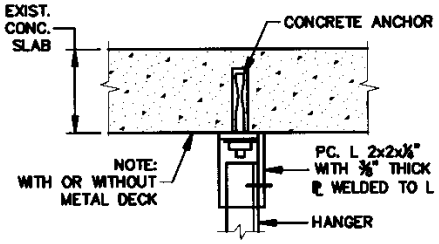

DETAIL – J
CONCRETE ANCHOR IN SLAB

CONNECTION TO STRUCTURE–MATERIALS

ACCEPTABLE ANCHORAGE DEVICES

NEW CONSTRUCTION –WITH METAL DECKING:

1. DETAIL D: CAST IN METAL DECK INSERT.
   a. ZINC COATED ADJUSTABLE METAL DECK CEILING BOLT TYPE B3019 AS MANUFACTURED BY COOPER B-LINE. INSTALL BEARING PLATE ON TOP OF DECK RIBS.
   b. METAL DECK HANGER AS MANUFACTURED BY ANVIL INTERNATIONAL, TYPE A, B OR C. PLATE SHALL BEAR ON TOP OF DECK RIBS AS SHOWN.
   c. AN APPROVED EQUAL.
   ANCHOR MUST BE DESIGNED SUCH THAT THE ALLOWABLE ANCHOR LOADING IS BASED ON A F.O.S. OF 4.0. ANCHOR CAPACITY SHALL BE GREATER THAN THE ALLOWABLE CAPACITY OF THE CONNECTING ROD, BASED ON A36 STEEL.
2. DETAIL F: HILTI HCI-MD CAST IN ANCHORS. ¼", ⅜", OR ½". LARGER SIZES NOT ACCEPTABLE.
3. AN APPROVED EQUAL. ANCHOR MUST BE DESIGNED SUCH THAT THE ALLOWABLE ANCHOR LOADING IS BASED ON A F.O.S. OF 4.0, ANCHOR ALLOWABLE LOAD SHALL BE GREATER THAN THE HANGER ALLOWABLE LOAD, BASED ON A36 THREADED ROD.

NEW CONSTRUCTION –WITHOUT METAL DECKING:

1. CAST IN ANCHOR BOLT
   A. DETAIL E: REQUIREMENT: MIN. ⅜" THICK PLATE, WITH NUT TOP AND BOTTOM. ADDITIONAL REINFORCEMENT AS SHOWN IN DETAIL.
   B. DETAIL G: HILTI HCI-WF ¼", ⅜", or ½" WOOD FORM APPLICATIONS LARGER SIZES NOT ACCEPTABLE.
   C. AN APPROVED EQUAL. ANCHOR MUST BE DESIGNED SUCH THAT THE ALLOWABLE ANCHOR LOADING IS BASED ON A F.O.S. OF 4.0, ANCHOR ALLOWABLE LOAD SHALL BE GREATER THAN THE HANGER ALLOWABLE LOAD, BASED ON A36 THREADED ROD.
2. DETAIL H: CHANNEL TYPE INSERT IN CONCRETE SLAB
   A. UNISTRUT P3200 SERIES, P3300 SERIES, OR M24 (SPOT)
   B. B-LINE B2505
   C. AN APPROVED EQUAL

EXISTING CONSTRUCTION –WITH OR WITHOUT METAL DECKING:

1. DETAILS I AND J: CONCRETE ANCHORS
   NOTE: FOR CONDITIONS WITH METAL DECKING, INSTALL AT TOP OF FLUTE WHERE FEASIBLE. DETAIL J IS NOT APPLICABLE FOR LIGHTWEIGHT CONCRETE SLABS.
   A. HILTI HSL, HSLB, OR HDA UNDERCUT ANCHOR.
   B. LIEBIG SAFETY BOLT, SUPERPLUS UNDERCUT ANCHOR.
   C. AN APPROVED EQUAL MECHANICAL ANCHOR RATED FOR OVERHEAD, VIBRATION LOADING.
2. DETAILS K, L, M AND N: STEEL SUBFRAMING
   REQUIREMENT: DESIGN IN ACCORDANCE WITH AISC OR AISI (COLD FORM APPLICATIONS)

THE PORT AUTHORITY OF NY & NJ	INACCESSIBLE HEAVYWEIGHT CEILING DESIGN STANDARDS FOR CEILINGS WITH A DL GREATER THAN 4PSF TYPICAL CONNECTIONS TOSTRUCTURE 2	ATTACHMENT S1 SHEET 7 OF 8

TYPICAL DETAILS FOR HANGER CONNECTION TO STRUCTURE

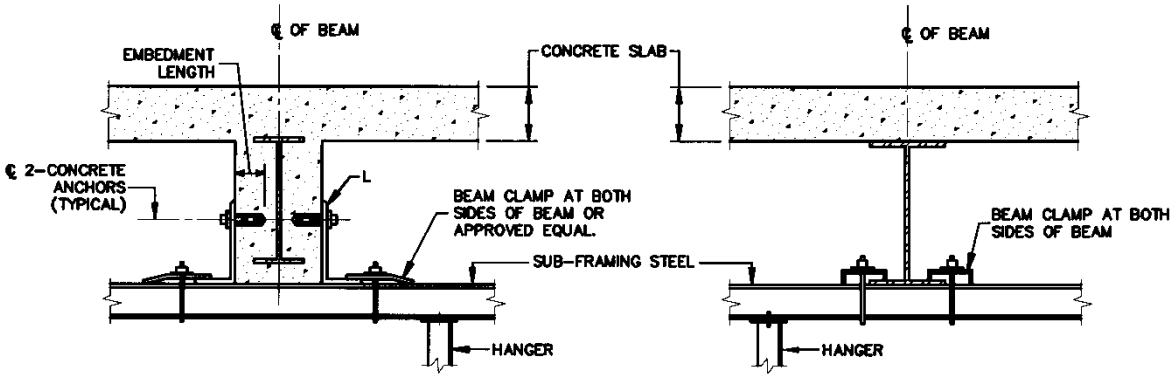

DETAIL – K
SUBFRAMING AT ENCASED BEAM

DETAIL – L
SUBFRAMING CLAMPED TO STEEL BEAM

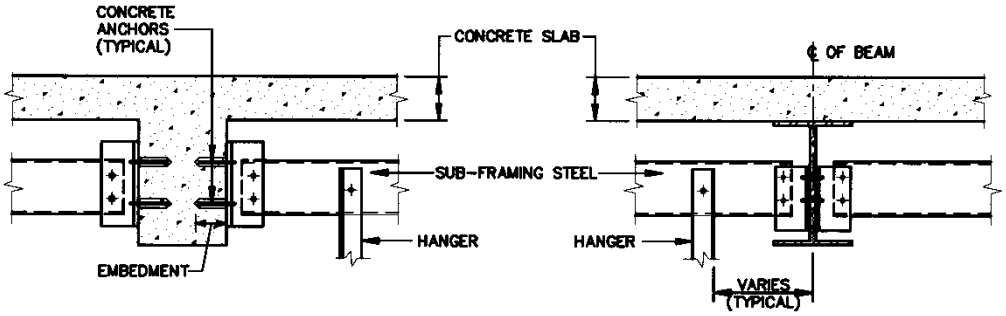

DETAIL – M
SUBFRAMING AT CONCRETE BEAM

DETAIL –N
SUBFRAMING CONNECTED TO STEEL BEAM

THE PORT AUTHORITY OF NY & NJ	INACCESSIBLE HEAVYWEIGHT CEILING DESIGN STANDARDS FOR CEILINGS WITH A DL GREATER THAN 4PSF TYPICAL CONNECTIONS TO STRUCTURE 3	ATTACHMENT S1 SHEET 8 OF 8

The design and installation of all ceiling suspension systems for acoustical tile and lay in panels weighing less than 4 lbs., shall comply with the following Port Authority criteria, in addition to the applicable requirements in the building codes:

1. Integral metal deck hanger tabs and non-piercing type tabs shall not be used for top hanger connection.

2. The hanger and its connections shall be capable of supporting the total suspended load with a minimum factor of safety of four.

This page is intentionally left blank.

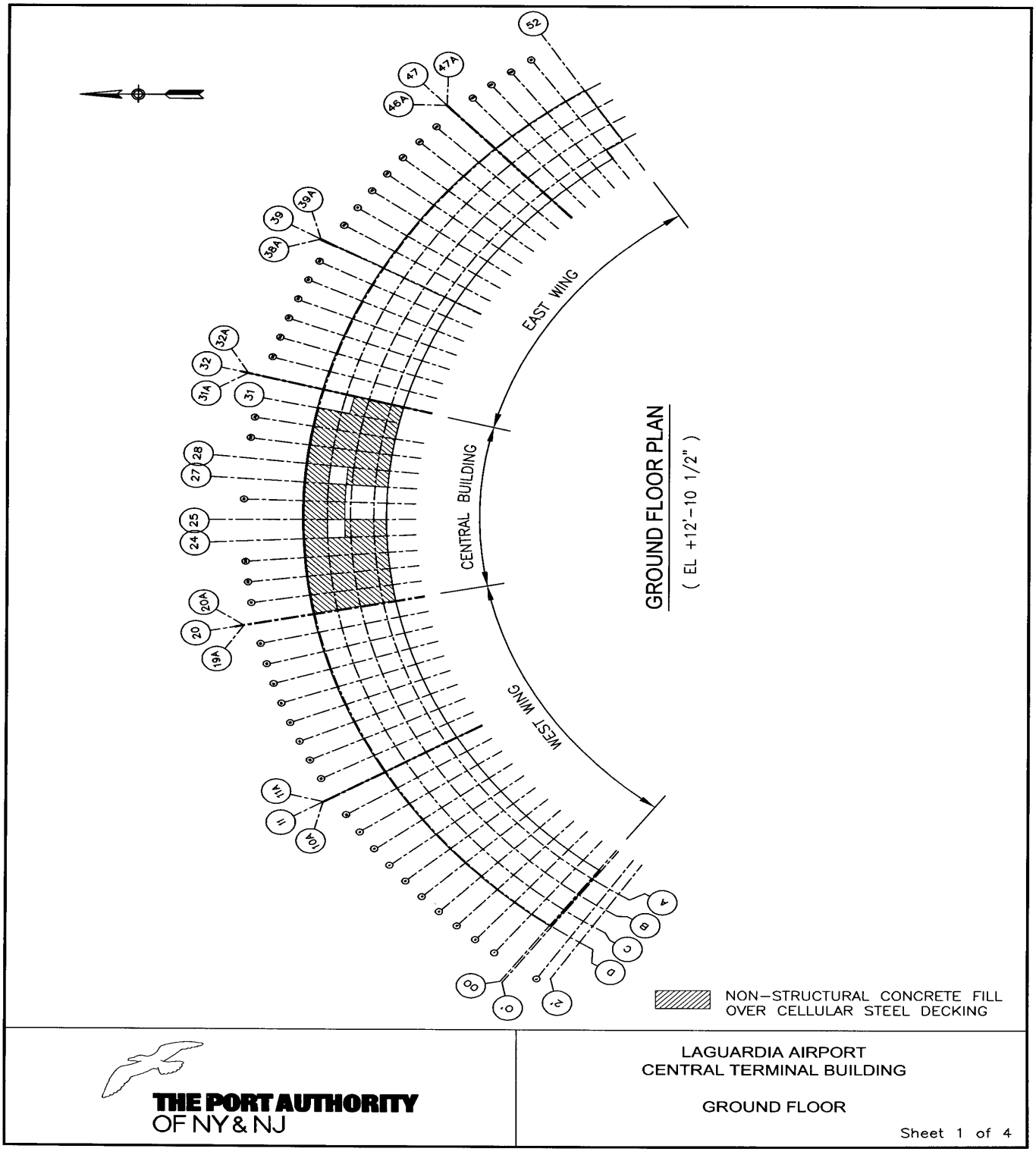
GROUND FLOOR PLAN
(EL +12'-10 1/2")
EAST WING
CENTRAL BUILDING
WEST WING
NON-STRUCTURAL CONCRETE FILL OVER CELLULAR STEEL DECKING
THE PORT AUTHORITY OF NY & NJ
LAGUARDIA AIRPORT
CENTRAL TERMINAL BUILDING
GROUND FLOOR
Sheet 1 of 4

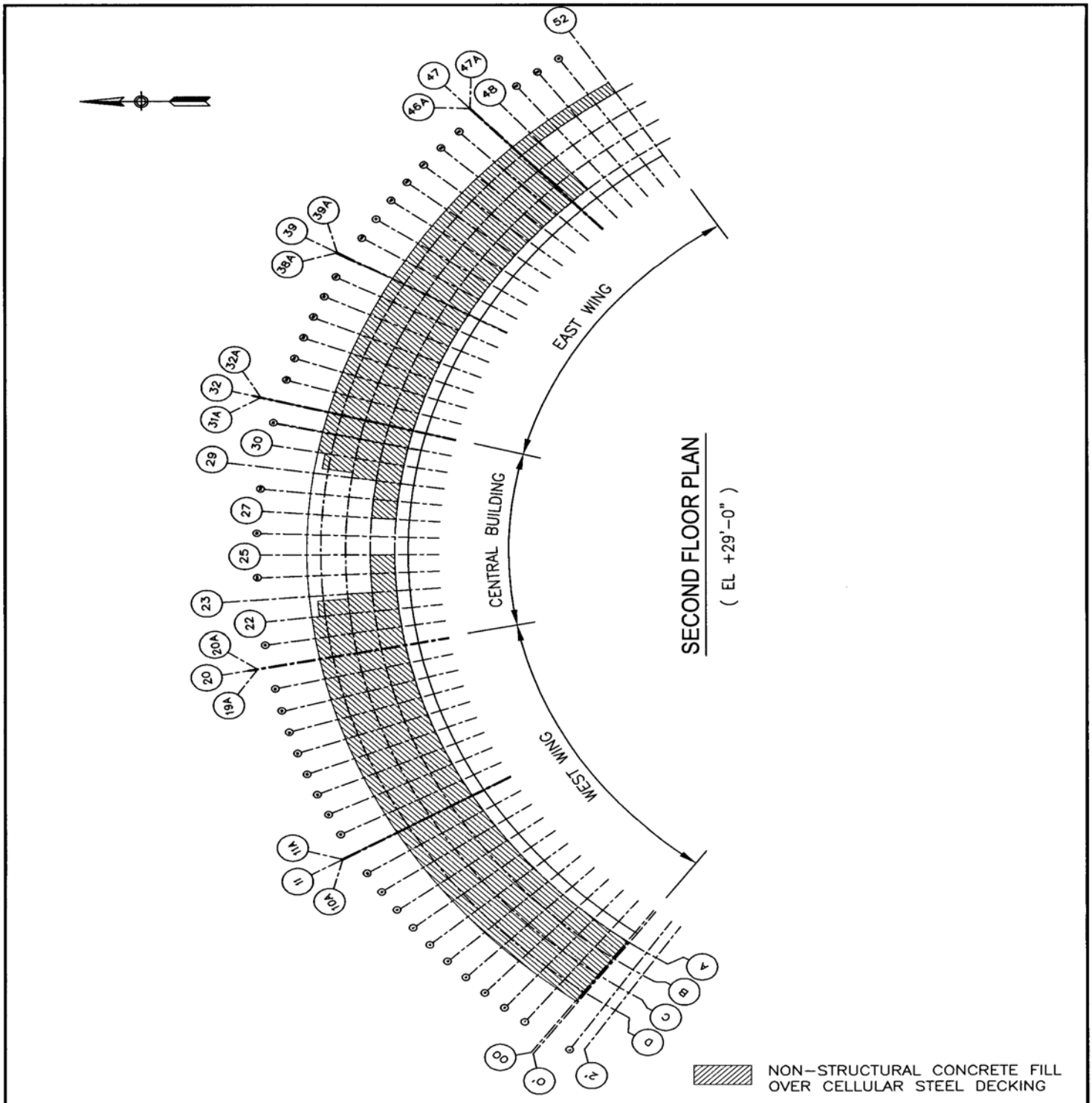

THE PORT AUTHORITY
OF NY & NJ

LAGUARDIA AIRPORT
CENTRAL TERMINAL BUILDING

SECOND FLOOR

Sheet 2 of 4

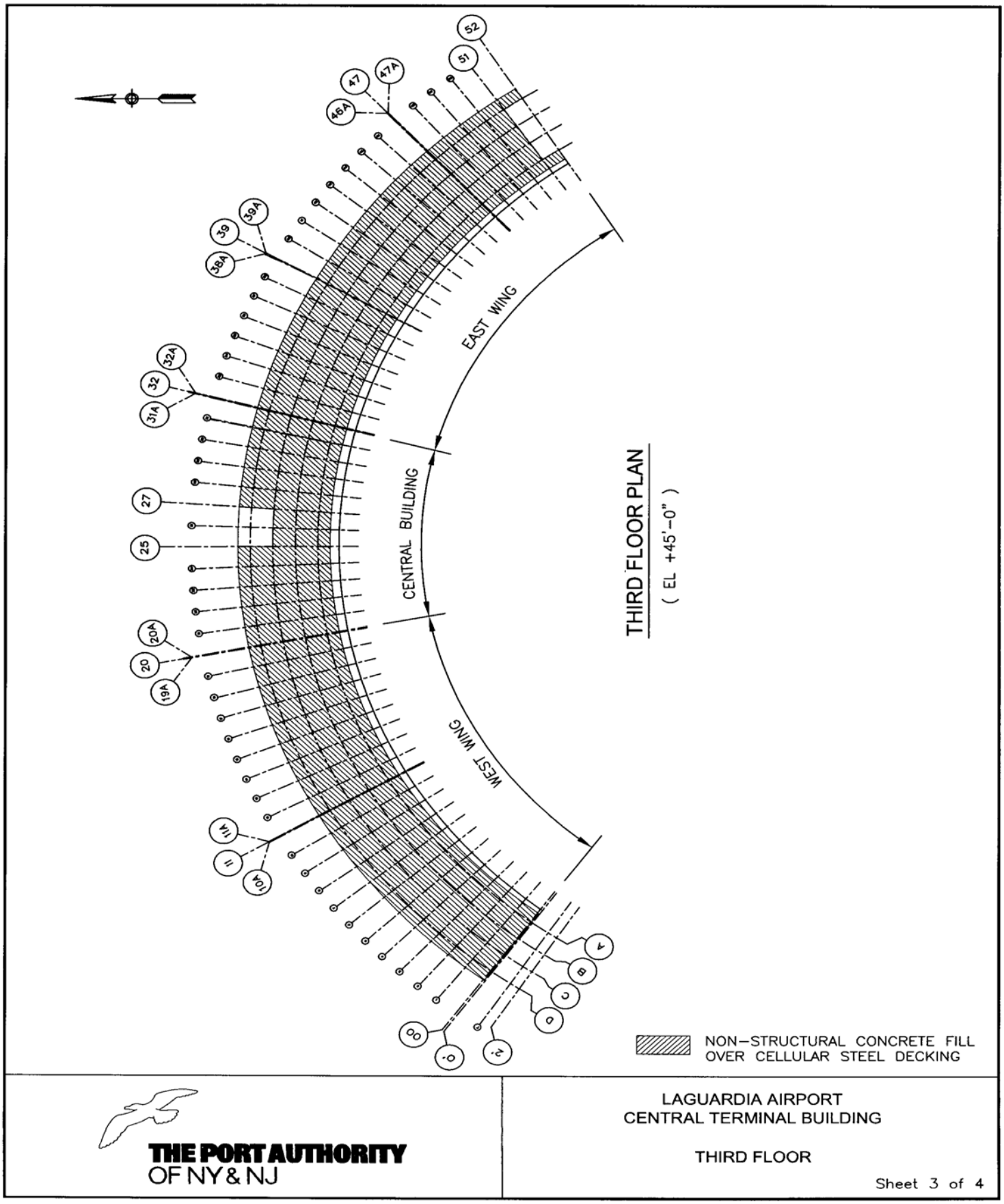
52
51
47
47A
46A
39
39A
38A
32A
32
31A
27
25
20A
20
19A
11A
11
10A
A
B
C
D
O.
O0
EAST WING
CENTRAL BUILDING
WEST WING
THIRD FLOOR PLAN
(EL +45'-0")
NON-STRUCTURAL CONCRETE FILL
OVER CELLULAR STEEL DECKING
THE PORT AUTHORITY
OF NY & NJ
LAGUARDIA AIRPORT
CENTRAL TERMINAL BUILDING
THIRD FLOOR
Sheet 3 of 4

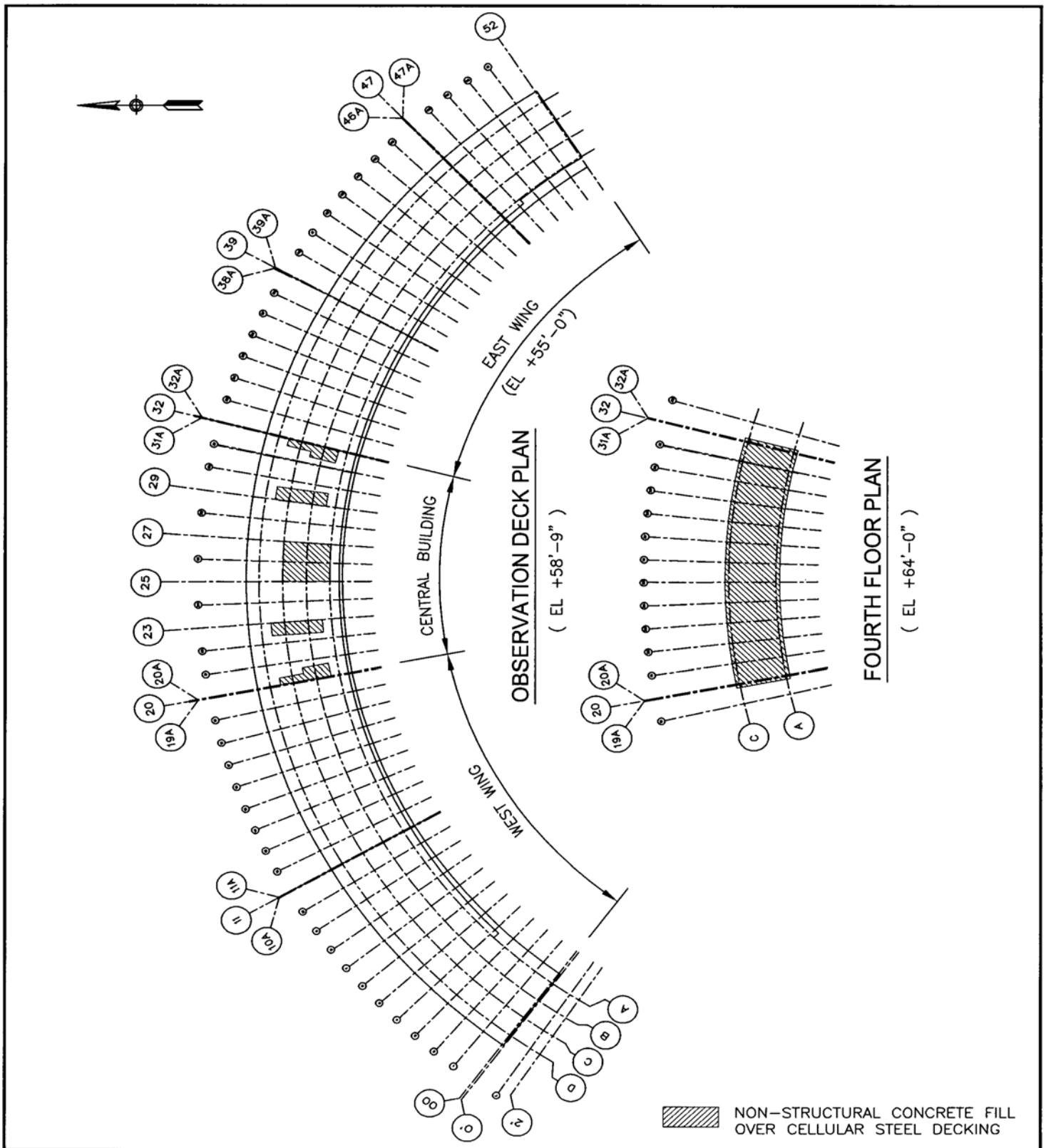

THE PORT AUTHORITY
OF NY & NJ

LAGUARDIA AIRPORT
CENTRAL TERMINAL BUILDING

FOURTH FLOOR & OBSERVATION DECK

Sheet 4 of 4

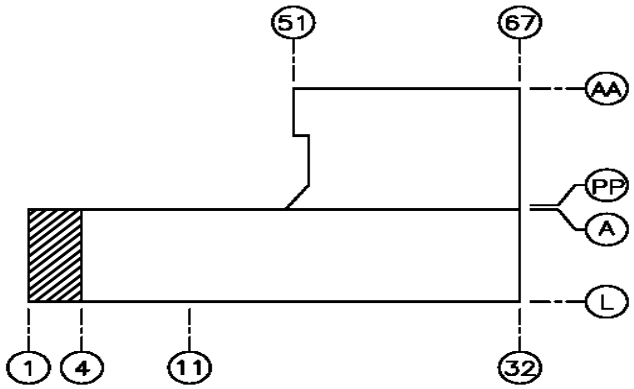

LOWER BUS LEVEL

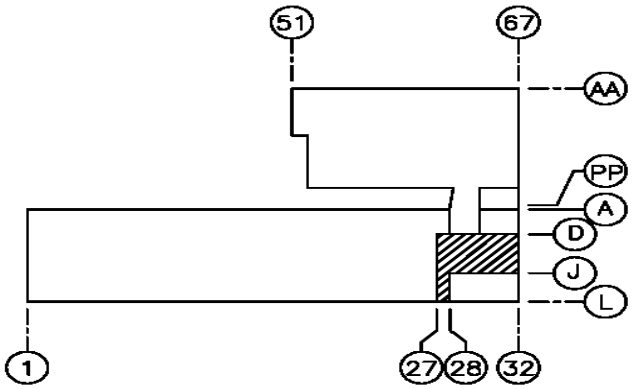

SUBWAY MEZZANINE

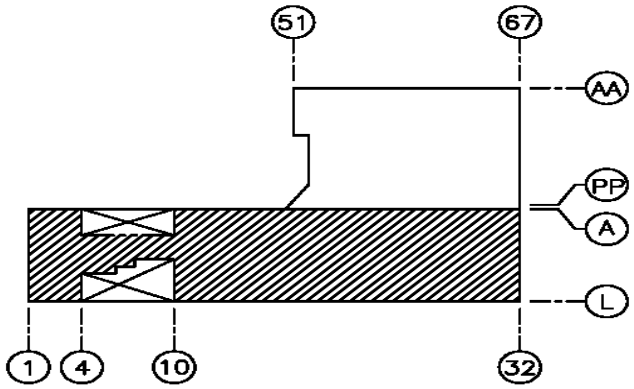

MAIN CONCOURSE

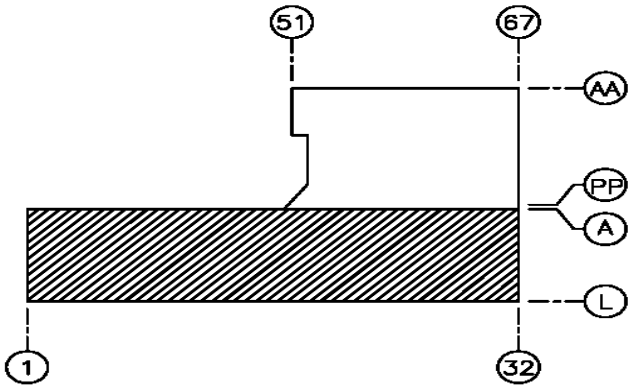

SUBURBAN CONCOURSE

NOTE:

INDICATES LIGHTWEIGHT LOW STRENGTH CONCRETE FLOOR SLABS. CONCRETE ANCHORS ARE NOT PERMITTED IN THESE SLABS FOR SUPPORTING DUCTS, UTILITIES, CEILINGS AND OTHER MISCELLANEOUS LOADS.

THE PORT AUTHORITY OF NY & NJ

PORT AUTHORITY BUS TERMINAL
LIGHTWEIGHT CONCRETE SLAB AREAS

This page is intentionally left blank.

NUMBER	TITLE
010.010-A	MANHOLE-AIRCRAFT
010.010-B	MANHOLE-AIRCRAFT
010.011	MANHOLE TYPE II PRE-CAST
010.012	SUBSURFACE DRAINS
010.013	MANHOLE TYPE “A” PRE-CAST
010.014-A	MANHOLE TYPE 1
010.014-B	MANHOLE TYPE !
010.020	ADJUSTMENT OF MANHOLE 6” OR MORE
010.021	ADJUSTMENT OF MANHOLE AND CATCH BASIN 6” OR LESS
011.002	MANHOLE FRAME AND COVER-AIRCRAFT TYPE
011.003	AIRCRAFT MANHOLE SILT BUCKET
011.004	MANHOLE FRAME AND COVER
011.005	MANHOLE SILT BUCKET
020.001	STORM SEWER INLET
020.011	CATCH BASIN TYPE II CAST IN-PLACE
020.012	CATCH BASIN TYPE II PRE-CAST
020.013	CATCH BASIN TYPE III
020.014	HEAVY DUTY GRATING FOR RUNWAYS, TAXIWAYS, SAFTEY AREAS AND APRONS
020.015	VAPOR TIGHT TRAP
020.019	CATCH BASIN TYPE IV CAST IN-PLACE
020.020	CATCH BASIN TYPE IV PRE-CAST
020.021	CATCH BASIN TYPE A PRECAST
025.001	MANHOLE STEP DETAIL
025.002	PROTECTIVE CONCRETE SLAB
030.011	LOW PRESSURE FIRE HYDRANT CONNECTION
030.012	LOW PRESSURE FIRE HYDRANT CONNECTION (ROD AND BANDS)
030.013	HIGH PRESSURE FIRE HYDRANT CONNECTION
030.014	HIGH PRESSURE FIRE HYDRANT CONNECTION (ROD AND BANDS)
030.015	FIRE HYDRANT CONNECTION-PN/EPMT
030.020	WATER PIPE RESTRAINED LENGTHS FOR MAINS
030.021	WATER MAIN CROSSING BELOW OBSTRUCTION
030.023	WATER PIPE RODDING LENGTHS FOR MAINS
030.024	FOUR-SECTION BAND AND ROD ASSEMBLY DETAILS
030.025	PIPE RODDING THRU WATERPROOF WALLS

ATTACHMENT C1 (continued)

NUMBER	TITLE
030.026	FOUR-SECTION BAND AND ARODDING ASSEMBLY FOR VALVES IN MAINS
030.044	DOMESTIC WATER SERVICE 1” TO 2” SIZES
030.050	REINFORCED CONCRETE ENCASEMENT FOR PIPES
041.001	STORM SEWER CRADLE
043.001	SANITARY SEWER CRADLE
043.002	PIPE JOINT DETAIL AT SANITARY MANHOLES
043.004	PIPE CLEANOUT DETAIL
050.013	VALVE SKIRT AND FOUNDATION OVER TAPPING VALVES
050.014	VALVE SKIRT AND FOUNDATION DETAIL
050.017	VALVE BOX-TYPE NJ
050.018	VALVE BOX-TYPE NY
050.019	FRAME AND COVER FOR SHIP SERVICE BOX (H20 LOADING)
050.022-A	16 INCHHORIZONTAL GATE VALVE- IN PIT
050.022-B	PIPING LAYOUT (16 INCH VALVE CHAMBER))
060.003-A	END OF CURB TREATMENT
060.003-B	CURB TO HEADER TRANSITION
060.003-C	CONCRETE CURB DETAILS
060.004	STEEL FACE CURB-TYPE SF
060.005	RIGID BASED PAVEMENT RESTORATION
060.006	FLEXIBLE PAVEMENT RESTORATION
061.001	CONCRETE DOLLY PAD
062.001	FLEXIBLE PAVEMENT SECTIONS-LGA
062.003	LIME CEMENT FLYASH PAVEMENT SECTIONS
062.004	FLEXIBLE PAVEMENT SECTIONS-JFK/EWR
062.010	PORTS-MARINE TERMINAL PAVEMENT SECTIONS
062.011	STONE SHOULDER
062.012	PAVEMENT MEETING EXISTING PAVEMENT
062.013	PAVEMENT MEETING EXISTING FILL (ROADWAY)
062.014	PAVEMENT MEETING EXISTING FILL (PARKING LOT)
062.015	KEYWAY DETAIL
062.016	END AND CONTINUATION OF OVERLAY PAVING DETAIL FOR RUNWAYS AND TAXIWAYS
062.020	SIDEWALK DETAIL
062.021A	SIDEWALK PEDESTRIAN RAMPS
062.021B	SIDEWALK PEDESTRIAN RAMPS
062.022	DROP CURB AND DRIVEWAY DETAILS
065.001	PAY LINES FOR TRENCH EXCAVATION
066.001	BEDDING DETAIL
066.002	BEDDING DETAIL (STORM)
070.076	SURVEY MARKER-TYPE 2
081.001	PARKING METER STANDARDS

ATTACHMENT C1 (continued)

NUMBER	TITLE
082.001	DETAIL OF RAILROAD TRACK IN OPEN PAVED AREAS
082.002	TRACKS IN UNPAVED AREAS
082.003	PAVEMENT AT CRANE RAIL-TYPE I
082.004	PAVEMENT AT CRANE RAIL-TYPE II
082.005	RUBBER RAILSEAL DETAIL
082.006	RUBBER RAILROAD CROSSING DETAIL
082.007	TRACKS BETWEEN DISTRIBUTION BUILDINGS
089.001	SETTLEMENT PLATES-TYPES 1 AND 2
090.001	PIPEGUARD SPACING DETAILS
090.002	PIPEGUARD WITH FOOTING
090.003	PIPEGUARD WITH FOOTING (HEAVY DUTY)
090.004	STANDARD STEEL HYDRANT FENDER
090.005	PIPEGUARD FOR BUS PARKING AREAS
090.010	METALLIC COATED CHAIN LINK FENCE-EWR
090.011	METALLIC COATED STEEL CHAIN LINK FENCE
090.012	8’ HIGH PVC COATED CHAIL LINLK FENCE-1” MESH
090.015	FENCE “T” EXTENSION AT WHARF
090.020	TEMPORARY SEDIMENT BARRIER
090.030	PRE-CAST CONCRETE BUMPER AND TIMBER BUMPER
090.031	TIMBER BARRICADE-TYPE 1

This page is intentionally left blank.

INDEX OF STANDARD CIVIL SPECIFICATIONS

SPEC. NO.	TITLE
02073	CUTTING PATCHING AND REMOVAL (N 10-30-96).PDF
02150	SLABJACKING OF CONCRETE SLABS (N 2-3-97).PDF
02221	EXCAVATION BACKFILLING AND FILLING (N 12-28-98).PDF
02222	EXCAVATION BACKFILLING AND FILLING (NARROWSCOPE) (N 2-28-02).PDF
02231	AGGREGATE BASE COURSE (P 10-19-95).PDF
02241	LIME-CEMENT-FLYASH STABILIZED FILL SAND BASE (A 6-30-88).PDF
02274	GEOTEXTILES (N 4-11-02)).PDF
02452	RAILROAD TRACKWORK (OTHER THAN PATH RAIL TRANSIT) (N 1-17-96).PDF
02453	OPEN AREA TRACKWORK (PATH RAIL TRANSIT) (P 12-19-95).PDF
02464	BRIDGE TIE REPLACEMENT (N 1-16-96).PDF
02465	RAILROAD TIE REPLACEMENT (N 1-17-96).PDF
02466	BALLAST SURFACE AND ALIGN TRACK (N 10-30-96).PDF
02501	SILANE SEALER (N 6-6-00).PDF
02503	MAGNESIUM PHOSPHATE CONCRETE PATCHING (A).PDF
02506	CONCRETE PAVEMENT PATCHING (N 4-30-98).PDF
02507	PAVEMENT CRACK SEALING (N 2-3-97).PDF
02510	PORTLAND CEMENT CONCRETE PAVING (FAA) (N 4-8-99).PDF
02512	FIBROUS CONCRETE OVERLAY PAVEMENT (A REVISED 12-11-89).PDF
02514	GLASPHALT CONCRETE BASE COURSE PAVING (N 8-1-94).PDF
02519	POLYMER CONCRETE PAVEMENT (N 12-19-95).PDF
02545	AERONAUTICAL PAVEMENT GROOVING AND REGROOVING (N 6-12-96).PDF
02551	ASPHALT CONCRETE PAVING (N 1-7-04).PDF
02555	ASPHALT BOND COAT (N 10-5-95).PDF
02557	COAL TAR EPOXY SEALCOAT (N 2-10-97).PDF
02561	APHALT CONCRETE PAVING (FAA) (A 1-31-05).PDF
02563	LATEX MODIFIED ASPHALT CONCRETE PAVING WITH BLENDED BITUMEN (FAA) (N 4-24-97).PDF
02564	ASPHALT CONCRETE PAVING WITH BLENDED BITUMEN (FAA) (N 4-24-97).PDF
02566	ASPHALT CONCRETE DRAINAGE MIX (N 8-9-96).PDF

ATTACHMENT C2 (continued)

SPEC. NO.	TITLE
02567	ASPHALT CONCRETE PAVING MEMBRANE (FAA) (N 8-9-96).PDF
02569	RUBBERIZED COAL TAR EMULSION SEALCOAT (N 2-3-97).PDF
02570	KERF CUTS FOR DRAINAGE (N 10-30-96).PDF
02571	KERF CUTS FOR ELECTRICAL CONDUITS (N 10-30-96).PDF
02574	ABRASIVE BLASTING OF PAVEMENTS (N 10-30-96).PDF
02575	PAVEMENT MILLING (N 10-30-96).PDF
02576	GRIT TAR SLURRY SEALCOAT (N 2-3-97).PDF
02577	LATEX MODIFIED CONCRETE (P 3-18-03).PDF
02578	PAVEMENT JOINT SEALING (P 3-20-03).PDF
02579	EMULSIFIED ASPHALT SLURRY SEALCOAT (N 10-30-96).PDF
02610	EXTERIOR SANITARY SEWER SYSTEM (P 12-14-95).PDF
02664	EXTERIOR WATER SUPPLY - DUCTILE IRON PIPE FOR CITY OF NEWARK- NJ FACILITIES (A 5-1705).PDF
02665	EXTERIOR WATER SUPPLY SYSTEM - DUCTILE IRON PIPE FOR NEW YORK FACILITIES (N 4-18-02).PDF
02666	EXTERIOR WATER SUPPLY - DUCTILE IRON PIPE FOR CITY OF ELIZABETH - NJ FACILITIES (A 5-1705).PDF
02667	EXTERIOR WATER SUPPLY - DUCTILE IRON PIPE FOR JERSEY CITY -NJ FACILITIES (N 11-27-00).PDF
02668	EXTERIOR WATER SUPPLY SYSTEM - STEEL PIPE NEW YORK FACILITIES (P 10-10-95).PDF
02711	SUBDRAINAGE SYSTEM (N 7-7-99).PDF
02720	MANHOLES AND DRAINAGE STRUCTURES (N 04-18-02).PDF
02721	STORM DRAINAGE SYSTEM (INFILTRATION-EXFILTRATION TESTING REQUIRED) (N 7-30-99).PDF
02722	STORM DRAINAGE SYSTEM (INFILTRATION-EXFILTRATION TESTING NOT REQUIRED (N 7-30-99).PDF
02765	CLEANING STORM DRAINAGE AND SANITARY SEWER SYSTEMS (N 2-3-97).PDF
02831	PVC - COATED STEEL CHAIN LINK FENCE AND GATES (A-10-02-06).PDF
02832	METALLIC - COATED STEEL CHAIN LINK FENCE AND GATES (A 10-02-06).PDF
02837	STEEL ORNAMENTAL PICKET FENCE AND GATES (N 1-21-98).PDF
03100	CONCRETE FORMWORK (P 9-29-95).PDF
03200	CONCRETE REINFORCEMENT (P 9-29-95).PDF
03301	PORTLAND CONCRETE CEMENT - LONG FORM2.PDF
03302	PORTLAND CEMENT CONCRETE (SHORT FORM) (A 01-12-06)
03303	PLACEMENT OF PORTLAND CEMENT CONC (SHORT FORM) (A 01-12-06)
03740	ACRYLIC CONCRETE SEALER (P).PDF

C3 **INDEX OF CIVIL DESIGN GUIDELINES**

1.0 OVERVIEW

2.0 TECHNICAL AND CODE STANDARDS/REGULATIONS

3.0 DESIGN CRITERIA & SPECIAL REQUIREMENTS

3.1 ELEMENTS OF DESIGN FOR ROADWAYS
- 3.1.1 GENERAL
- 3.1.2 CLASSIFICATIONS
- 3.1.3 GEOMETRIC AND MISCELLANEOUS ELEMENTS
  - 3.1.3.1 DESIGN SPEED
  - 3.1.3.2 SIGHT DISTANCE
  - 3.1.3.3 HORIZONTAL ALIGNMENT
  - 3.1.3.4 VERTICAL ALIGNMENT
- 3.1.4 CROSS SECTION ELEMENTS
  - 3.1.4.1 CROSS SLOPE
  - 3.1.4.2 WIDTH OF LANE
  - 3.1.4.3 WIDTH OF SHOULDER
  - 3.1.4.4 ROLLOVER
  - 3.1.4.5 SIDEWALK AND PEDESTRIAN ELEMENTS
  - 3.1.4.6 CURBS
  - 3.1.4.7 FORESLOPE

3.2 ELEMENTS OF DESIGN FOR CONTAINER TERMINALS & INTERMODAL YARDS
- 3.2.1 GRADING
- 1.2.2 DRAINAGE
- 1.2.3 SHIP CRANE RAILS
- 1.2.4 GRADING AT TRUCK DOCKS AND BUILDINGS

3.3 ELEMENTS OF DESIGN FOR AIRFIELDS
- 3.3.1 CLASSIFICATION AND GEOMETRY
- 3.3.2 SURFACE GRADIENT
- 3.3.3 CROSS-SLOPE
  - 3.3.3.1 GENERAL
  - 3.3.3.2 ADJUSTMENT TO GRADES AT INTERSECTIONS
  - 3.3.3.3 CHANGES IN CROSS SLOPE
- 3.3.4 APRON GRADING

ATTACHMENT C3 continued

3.4 ELEMENTS OF DESIGN FOR TRACK WORK

3.4.1 PORT AUTHORITY TRANS-HUDSON (PATH) FACILITIES

3.4.1.1 GENERAL
3.4.1.2 GAGE
3.4.1.3 HORIZONTAL ALIGNMENT
3.4.1.4 TRACK SUPERELEVATION
3.4.1.5 VERTICAL ALIGNMENT
3.4.1.6 STATIONS
3.4.1.7 CLEARANCES
3.4.1.8 BALLAST
3.4.1.9 ROADBED OR SUB-BALLAST
3.4.1.10 TIES
3.4.1.11 TIE SPACING
3.4.1.12 RAIL
3.4.1.13 TRACK APPURTENANCES
3.4.1.14 TURNOUTS AND CROSSOVERS

3.4.2 INTERMODAL AND FREIGHT YARDS

3.4.2.1 GENERAL
3.4.2.2 GAGE
3.4.2.3 HORIZONTAL CURVES
3.4.2.4 SUPERELEVATION
3.4.2.5 VERTICAL ALIGNMENT
3.4.2.6 TRACK CENTERS AND CLEARANCES
3.4.2.7 TURNOUTS AND CROSSOVERS
3.4.2.8 TRACK STRUCTURE AND COMPONENTS
3.4.2.9 DRAINAGE
3.4.2.10 GRADE CROSSINGS

3.5 ELEMENTS OF DESIGN FOR PAVEMENTS

3.5.1 AIRFIELD PAVEMENTS

3.5.1.1 DESIGN PROCEDURES AND METHODOLOGIES

3.5.2 VEHICULAR PAVEMENTS

3.5.2.1 DESIGN PROCEDURES AND METHODOLOGIES

3.5.3 MAINTENANCE OVERLAYS

3.5.3.1 GENERAL
3.5.3.2 FLEXIBLE PAVEMENT
3.5.3.3 RIGID PAVEMENT

ATTACHMENT C3 (continued)

3.6 ELEMENTS OF DESIGN FOR STORMWATER DRAINAGE SYSTEMS
3.6.1 GENERAL
3.6.2 HYDROLOGIC ANALYSIS
3.6.3 HYDRAULIC DESIGN
3.6.3.1 DESIGN CONDUIT FLOW
3.6.3.2 VELOCITY OF FLOW WITHIN PIPES
3.6.3.3 HYDRAULIC GRADE LINE (HGL)
3.6.3.4 MINIMUM PIPE SIZE
3.6.4 STANDARD METHOD
3.6.4.1 DESIGN PROCEDURE AND ASSUMPTIONS
3.6.4.2 USES OF THE STANDARD METHOD
3.6.4.3 LIMITATIONS OF STANDARD METHOD
3.6.5 LEVEL OF PROTECTION (RETURN PERIOD)
3.6.5.1 MISCELLANEOUS
3.6.6 LAYOUT
3.6.7 WATER QUALITY

3.7 ELEMENTS OF DESIGN FOR WATER SUPPLY
3.7.1 GENERAL
3.7.2 HYDRAULIC DESIGN
3.7.3 PIPE MATERIAL AND DESIGN
3.7.4 THRUST RESTRAIN
3.7.5 SYSTEM CAPACITY
3.7.6 MISCELLANEOUS
3.7.7 LAYOUT
3.8 ELEMENTS OF DESIGN FOR SANITARY SEWER
3.8.1 GENERAL
3.8.2 QUANTITY AND QUALITY OF SEWAGE
3.8.3 HYDRAULIC DESIGN
3.8.4 PIPES AND MANHOLE STRUCTURES
3.8.4.1 PIPE MATERIALS
3.8.4.2 MANHOLES
3.8.5 MISCELLANEOUS

3.9 HORIZONTAL AND VERTICAL CONTROLS
3.9.1 HORIZONTAL CONTROL
3.9.2 VERTICAL CONTROL

3.10 EXCEPTIONS
3.10.1 QUALIFICATIONS FOR AN EXCEPTION
3.10.2 PROCEDURE

ATTACHMENT C3 (continued)

4.0 DETAILS, NOTES AND CUSTOM SPECIFICATIONS

4.1 DETAILS FOR USE IN CONTRACT DOCUMENTS

4.1.1 LIBRARY OF STANDARD DETAILS
4.1.2 LIBRARY OF NON-STANDARD DETAILS

4.2 CIVIL NOTES FOR USE IN CONTRACT DOCUMENTS

4.2.1 GENERAL NOTES
- 4.2.1.1 NET COST NOTE
- 4.2.1.2 SAMPLE NET COSTS
- 4.2.1.3 UTILITY AND EXCAVATION NOTES
- 4.2.1.4 LANDSCAPE NOTES
- 4.2.1.5 SITE MAINTENANCE NOTES
- 4.2.1.6 SOIL DISPOSAL NOTES
- 4.2.1.7 ENVIRONMENTAL SOIL NOTES
- 4.2.1.8 MISCELLANEOUS NOTES
- 4.2.1.9 NOTES THAT SHOULD NOTE BE

4.2.2 CIVIL NOTES
- 4.2.2.1 ASPHALT CONCRETE PAVING NOTES
- 4.2.2.2 PORTLAND CEMENT CONCRETE NOTES
- 4.2.2.3 DRAINAGE AND SANITARY SEWER NOTES
- 4.2.2.4 WATER MAINS/SANITARY SEWERS
- 4.2.2.5 UTILITY REMOVAL AND ABANDONMENT NOTES
- 4.2.2.6 MISCELLANEOUS CIVIL NOTES

4.2.3 PAVEMENT GRADE AND SMOOTHNESS NOTES
4.2.4 PAVEMENT SMOOTHNESS AND GRADING NOTES
- 4.2.4.1 NOTES THAT SHOULD NOT BE

4.3 SPECIFICATIONS

5.0 REFERENCE MATERIALS

5.1 ALIGNMENT AND GRADING

5.1.1 GEOMETRIC DESIGN
5.1.2 SANITARY SEWERS
5.1.3 STORMWATER DRAINAGE
5.1.4 WATER SUPPLY

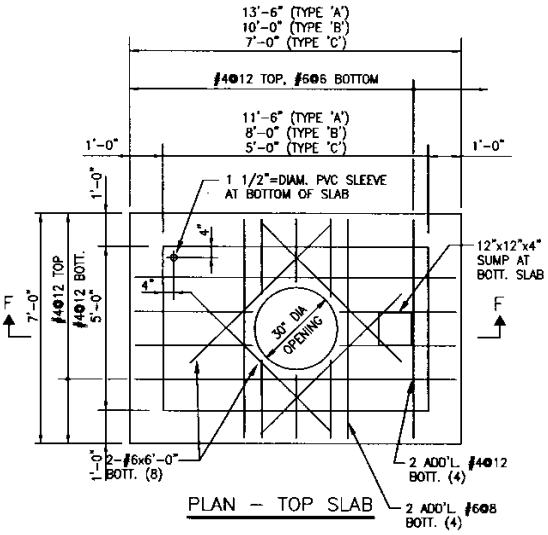

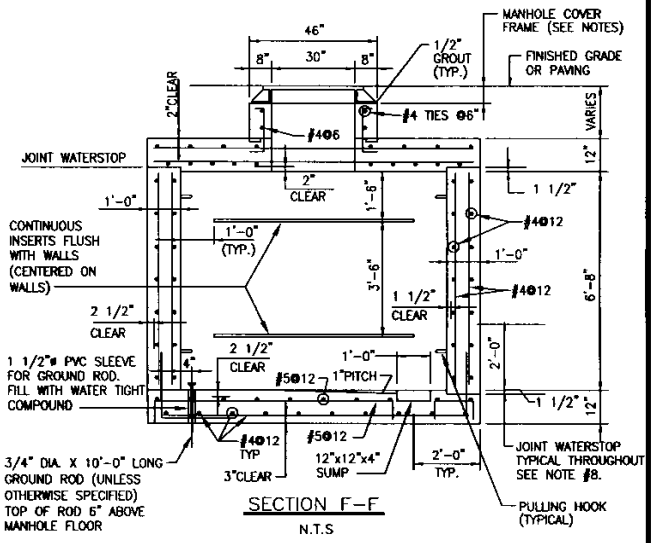

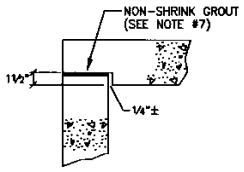

CORNER DETAIL
N.T.S.

NOTES

1. MANHOLE FRAMES AND COVERS RATED TO SUPPORT HS25-44 TRUCK LOADS SHALL BE CAST IRON. COVER SHALL HAVE STAINLESS STEEL BOLTS (TYPE 304) AND NON-PENETRATING PICKHOLES. FOR COVER MARKINGS SEE DETAILS ON THIS DRAWING. MANHOLE FRAME AND COVER SHALL BE CAMPBELL FOUNDRY #1012 OR APPROVED EQUAL.

   MANHOLE FRAMES RATED TO SUPPORT AIRCRAFT LOADS SHALL BE DUCTILE IRON. MANHOLE COVERS RATED TO SUPPORT AIRCRAFT LOADS SHALL BE DUCTILE IRON. COVER SHALL HAVE STAINLESS STEEL BOLTS (TYPE 304) AND NON-PENETRATING PICKHOLES. FOR COVER MARKINGS SEE DETAILS ON THIS DRAWING. MANHOLE FRAME AND COVER SHALL BE CAMPBELL FOUNDRY #1511 OR APPROVED EQUAL.
2. MINIMUM SPLICE LENGTHS REQUIRED FOR REINFORCING BARS: #4 BAR 1'-4"; #5 BAR : 1'-8"; #6 BAR : 2'-0".
3. REINFORCING BARS SHALL BE ASTM A-615 GRADE 60.
4. ALL PRE-CAST CONCRETE SHALL CONFIRM TO THE REQUIREMENTS OF P.A. SPECIFICATION SECTION 03420. CONCRETE SHALL BE HAVE A MINIMUM COMPRESSIVE STRENGTH OF 4000 PSI AT 28 DAYS.
5. WHEN THE HEIGHT OF THE COLLAR THAT SUPPORTS THE MANHOLE COVER IS LESS THAN 4 INCHES, A SINGLE COURSE OF SOLID CONCRETE MASONRY MAY BE USED TO SUPPORT THE COVER. IF MASONRY IS USED, MASONRY SHALL BE 3 5/8" WIDE x 7 5/8" LONG x HEIGHT OF COLLAR. IF THE COLLAR IS GREATER THAN 4 INCHES HIGH, THE COLLAR SHALL BE POURED IN PLACE CONCRETE.
6. ALL CAST-IN-PLACE CONCRETE SHALL CONFORM TO THE REQUIREMENTS OF P.A. SPECIFICATION SECTIONS 03302 AND 03303 WITH A 28 DAY DESIGN COMPRESSIVE STRENGTH OF 4000 PSI. IN ADDITION WHERE SPECIFICALLY CALLED FOR ON THE PLANS, VERY HIGH EARLY STRENGTH CONCRETE SHALL HAVE A SIX HOUR DESIGN COMPRESSIVE STRENGTH OF 2000 PSI. THE CONTRACTOR HAS THE OPTION OF PRECASTING THE COMPONENTS OF THE MANHOLE. HOWEVER, THE REINFORCEMENT SHOWN ON THESE SHEETS IS THE MINIMUM THAT SHALL BE PROVIDED. SUBMIT DETAILS TO THE ENGINEER.
7. GROUT SHALL BE NON-SHRINK, NON-METALUC GROUT IN CONFORMANCE WITH ASTM C1107, GRADE C. USE ONE OF THE FOLLOWING, OR AN APPROVED EQUAL:
   1. "MASTERFLOW 928" AS MANUFACTURED BY MASTER BUILDERS
   2. "FIVE STAR GROUT" AS MANUFACTURED BY FIVE STAR PRODUCTS. INC.
   3. "EUCO NS GROUT" AS MANUFACTURED BY THE EUCLID CHEMICAL COMPANY.
8. WATERSTOP:

   FOR CAST-IN-PLACE CONCRETE, WATERSTOP SHALL BE ONE OF THE FOLLOWING:
   1. "SWELLSEAL JOINT" AS MANUFACTURED BY DENEEF CONSTRUCTION CHEMICALS, INC., WALLER, TX.
   2. "HYDROTITE-CJ-1020" AS MANUFACTURED BY GREENSTREAK, ST. LOUIS, MO.
   3. "ADEKA ULTRA SEAL MC-2010MC" AS DISTRIBUTED BY OCM, Inc. CHICAGO, ILLINOIS
9. IF AN ORGANIC SOIL LAYER IS ENCOUNTERED AT THE BOTTOM OF THE EXCAVATION FOR THE MANHOLE, A MINIMUM OF 3 FEET OF OVER EXCAVATION OF THE SOIL LAYER SHALL BE REQUIRED. REPLACEMENT SHALL BE WITH I-12 MATERIAL IN ACCORDANCE WITH P.A. SPECIFICATION SECTION 02221.
10. DUCT BANKS SHALL PENETRATE THE NARROW WALLS OF A MANHOLE ONLY.
11. CONDUITS SHALL BE TERMINATED WITH END BELL FLUSH WITH INSIDE WALL.

THE PORT AUTHORITY OF NY & NJ	ELECTRICAL MANHOLE	ATTACHMENT E1 SHEET E1

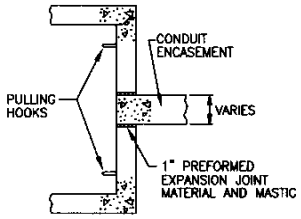

SECTION B–B

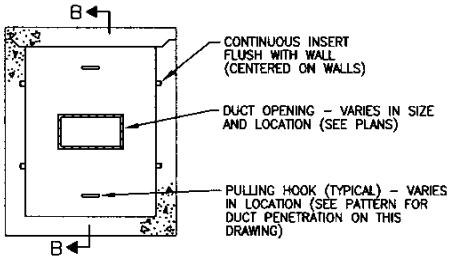

ELEVATION

TYPICAL DETAIL OF WINDOW & SIDING CONNECTION FOR DUCT

N.T.S.

NOTES

1. DUCT BANKS SHALL PENETRATE THE NARROW WALLS OF A MANHOLE ONLY.
2. CONDUITS SHALL BE TERMINATED WITH END BELL FLUSH WITH INSIDE WALL.
3. INSERTS SHALL BE HOT DIPPED GALVANIZED STEEL UNISTRUT, (GALVANIZED IN ACCORDANCE WITH ASTM A123 AND A153,) SERIES P-3200, OR APPROVED EQUAL, COMPLETE WITH END CAPS OF SIMILAR MATERIAL AND FINISHED WITH PLASTIC COATED FILLER.

THE PORT AUTHORITY OF NY & NJ	WINDOW & SIDING CONNECTION FOR DUCTS	ATTACHMENT E2 SHEET E2

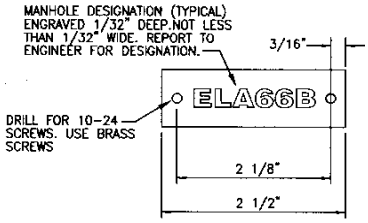

NAMEPLATE DETAIL
(BRASS-1/8" THICK)

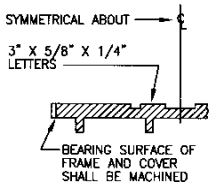

SECTION E-E

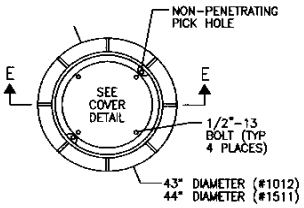

MANHOLE FRAME & COVER DETAIL
N.T.S.

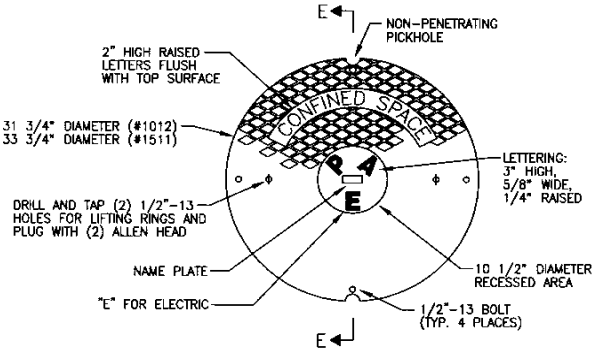

MANHOLE COVER DETAIL
N.T.S.

NOTES

1. MANHOLE FRAMES AND COVERS RATED TO SUPPORT HS25-44 TRUCK LOADS SHALL BE CAST IRON. COVER SHALL HAVE STAINLESS STEEL BOLTS (TYPE 304) AND NON-PENETRATING PICKHOLES. FOR COVER MARKINGS SEE DETAILS ON THIS DRAWING. MANHOLE FRAME AND COVER SHALL BE CAMPBELL FOUNDRY #1012 OR APPROVED EQUAL.

   MANHOLE FRAMES RATED TO SUPPORT AIRCRAFT LOADS SHALL BE DUCTILE IRON. MANHOLE COVERS RATED TO SUPPORT AIRCRAFT LOADS SHALL BE DUCTILE IRON. COVER SHALL HAVE STAINLESS STEEL BOLTS (TYPE 304) AND NON-PENETRATING PICKHOLES. FOR COVER MARKINGS SEE DETAILS ON THIS DRAWING. MANHOLE FRAME AND COVER SHALL BE CAMPBELL FOUNDRY #1511 OR APPROVED EQUAL.

2. WHEN THE HEIGHT OF THE COLLAR THAT SUPPORTS THE MANHOLE COVER IS LESS THAN 4 INCHES, A SINGLE COURSE OF SOLID CONCRETE MASONRY MAY BE USED TO SUPPORT THE COVER. IF MASONRY IS USED, MASONRY SHALL BE 3 5/8" WIDE x 7 5/8" LONG x HEIGHT OF COLLAR. IF THE COLLAR IS GREATER THAN 4 INCHES HIGH, THE COLLAR SHALL BE POURED IN PLACE CONCRETE.

THE PORT AUTHORITY OF NY & NJ	FRAME AND COVER	ATTACHMENT E1 SHEET E3

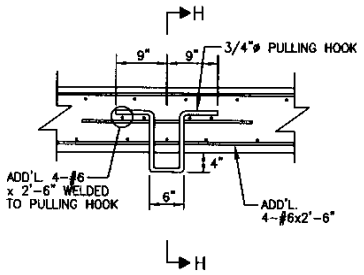

PLAN

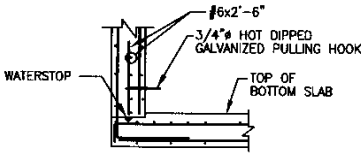

SECTION H-H

TYPICAL DETAIL OF
PULLING HOOK
N.T.S.

NOTES

1. PULLING HOOK SHALL BE ASTM A36 STEEL, HOT DIPPED GALVANIZED IN ACCORDANCE WITH ASTM A153. STEEL SHALL BE WELDED TO REINFORCING. WELDED AREA SHALL BE PREPARED AND CLEANED IN ACCORDANCE WITH SECTION 09910 PART 3.01E AND 3.02F.4 AND SHALL BE PAINTED WITH GALVANIZING ZINC RICH REPAIR PAINT IN ACCORDANCE WITH ASTM A780.

THE PORT AUTHORITY OF NY & NJ	PULLING HOOK	ATTACHMENT E1 SHEET E4

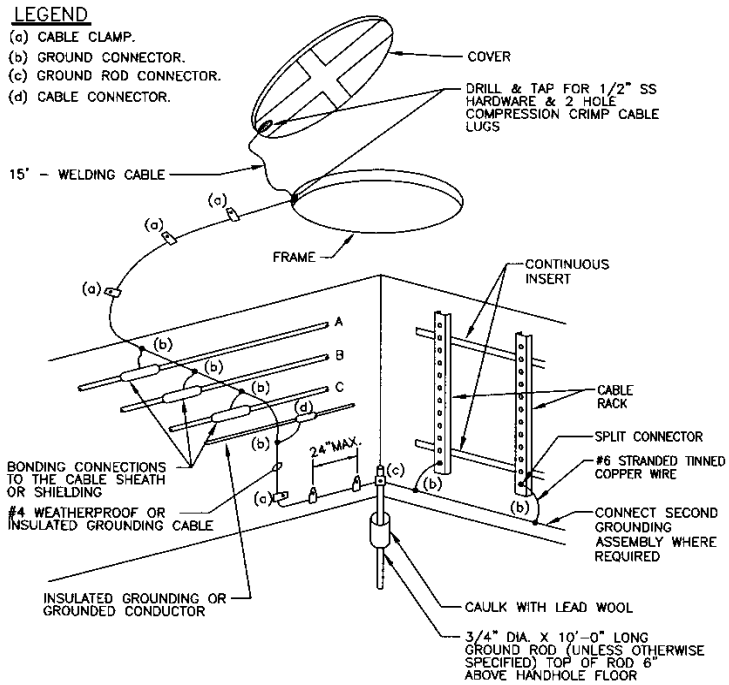

GROUNDING OF ELECTRICAL MANHOLES

N.T.S

NOTE

1. PAINT ALL GROUND CONNECTIONS WITH ASPHALT BASE PAINT.

THE PORT AUTHORITY OF NY & NJ	GROUNDING ASSEMBLY	ATTACHMENT E1 SHEET E5

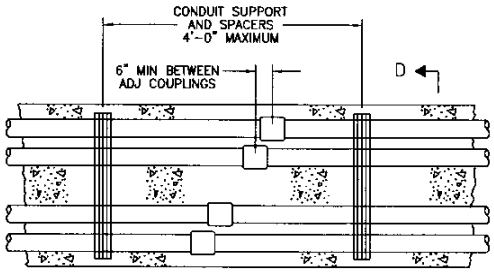

PLAN

NOTES

1. DUCTS UNDER VEHICULAR ROADWAYS OR OTHER AREAS (PARKING LOTS, RUNWAYS, TAXIWAYS, ETC.) WHERE TRUCKS, AIRCRAFT OR OTHER HEAVY EQUIPMENT TRAVEL SHALL BE CONCRETE ENCASED WITH VERY HIGH EARLY STRENGTH CONCRETE THAT HAS A SIX HOUR DESIGN COMPRESSIVE STRENGTH OF 2000 PSI. CONCRETE SHALL CONFORM TO THE REQUIREMENTS OF PA SPECIFICATION SECTION 03302.

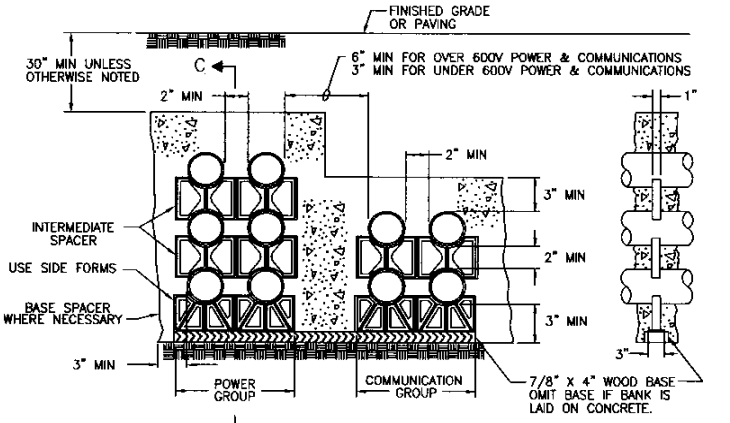

SECTION D–D

SECTION C–C

NOTES:

1. FOR SIZE AND NUMBER OF CONDUITS AS WELL AS DUCTBANK FORMATION, SEE PLANS.
2. COMMUNICATIONS CONDUIT GROUP SHALL BE SEPARATED FROM THE POWER GROUP ON EITHER LEFT OR RIGHT SIDE AS SHOWN ON PLANS.

DUCTBANK DETAILS – TYPICAL ARRANGEMENT

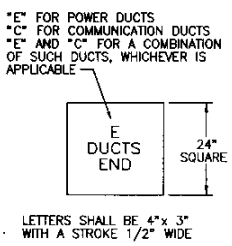

PLAN X–X

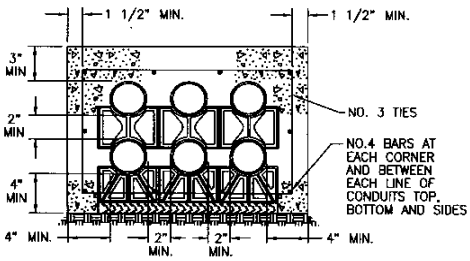

SECTION G–G

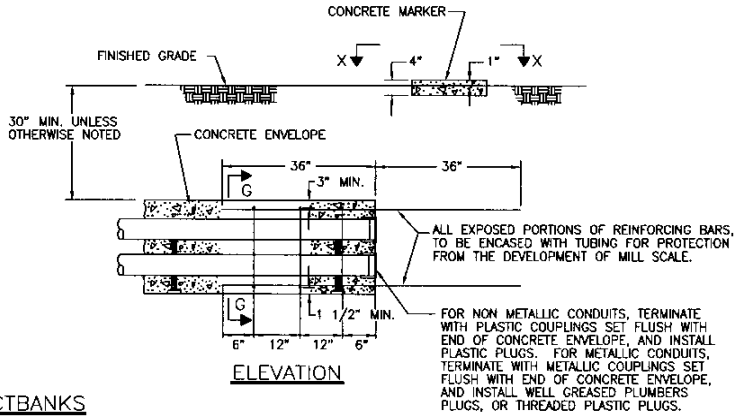

ELEVATION

DEAD–ENDING DUCTBANKS

THE PORT AUTHORITY OF NY & NJ	DUCT BANK DETAILS	ATTACHMENT E1 SHEET E6

A. ELECTRICAL SERVICE OPTIONS

1. Rent Inclusion:

   Tenant shall finish and install a 265/460 or 208/120 volt feeder in a conduit sized for the anticipated Tenant load, from the Bus Terminal point of electrical distribution to the perimeter of the leasehold, and terminate in a junction box. All electrical distribution, step-down transformers, wiring, panels, boxes, and lighting shall be provided by the Tenant.

2. Metered Service:

   Tenant shall furnish and install a conduit sized for the anticipated Tenant load, and terminate in a junction box. Install the conduit from the 265/460 or 208/120 volt Tenant Switchboard to the perimeter of the leasehold. All electrical distribution, step-down transformers, wiring, panels, boxes, and lighting, shall be provided by the Tenant. The Tenant shall be required to furnish and install a 200A, 3 phase, 7 point bypass meter pan whenever a metering system does not exist for a location, or when the existing meter pan is not sufficient for the Tenant's load.

B. TELEPHONE SERVICE

An empty conduit shall be installed by the Tenant from the Bus Terminal point of telephone distribution to the perimeter of the leasehold.

C. CONDUITS AND CONDUCTORS

1. Conduits

   a. Minimum conduit size shall be 3/4-inch.

   b. Maximum EMT size shall be two (2) inches.

   c. All outdoor, exposed conduit shall be rigid galvanized steel.

   d. PVC conduits shall not be installed in any indoor area.

2. Conductors

   a. General

Minimum wire size for power shall be #12 AWG, copper.

b. Fire Alarm

All fire alarm cables shall be New York City approved, shielded, twisted pair #14 AWG, solid copper, 200-degree C, 600V, except control circuits shall be unshielded.

D. GROUNDING

1. Whenever a grounding conductor is required (including feeders to motor loads greater than 1/8-horsepower), a separate ground wire shall be installed.

2. Ground-fault protection shall be provided for all receptacles and equipment located near running water, such as electrical water coolers.

E. TENANT FIRE ALARM SYSTEM

1. General

a. The design of Tenant fire alarm systems shall comply with the Building Code of the City of New York and the Electrical Code of the City of New York, and shall be Compatible with the existing Bus Terminal Fire Alarm System.

b. The Tenant Fire Alarm Systems shall utilize both automatic and Manual initiating (detection) devices and audible and visual notification (signaling) appliances.

i. Systems shall utilize either conventional or multiplex technologies. The use of addressable/intelligent systems is required.

ii. In cases where microprocessor software programmable systems are utilized a fully functional and manufacturers licensed copy of the software program, Manuals and accessories shall be provided to the Authority as part of the system.

iii. In all cases the occupants of the facility shall be able to clearly hear, and as required, clearly see the

system alarm signal(s).

iv All system components (Detectors, Signals, Modules, etc.) shall be UL Listed and Cross Listed for use with the System Control Panel.

c. Power to the smoke detection and fire alarm equipment shall be taken via fused cutouts connected to the line terminals of the nearest emergency electrical panel.

2. The Tenant Fire Alarm System shall be fully compatible with the existing Bus Terminal System Model MXL as manufactured by Cerberus Pyrotronics.

F. HVAC SMOKE DETECTORS

1. The Tenant shall provide smoke detectors in the HVAC systems which have been listed by Underwriters Laboratories, and approved by the New York City Building Department of the particular application. Detectors shall sense products of combustion. Detectors shall not be subject to an alarm due to the rapid change of humidity.

2. Duct detectors shall be Cerberus Pyrotronics Model ILI-1B with a Model AD-X3RI housing.

G. AREA SMOKE DETECTORS

a. The Tenant shall provide smoke detector over each leasehold entrance to the public corridor.

b. The area detector shall be Cerberus Pyrotronics Model ILI-1 with a DB-35 base.

H. LOCAL CONTROL PANEL AND EMERGENCY POWER SUPPLY

1. The Local Control Panel shall be Model MXL-IQ, as manufactured by Cerberus Pyrotronics, and shall be fully compatible with the Bus Terminal Fire Alarm System.

2. Emergency Power Supply for Local Control Panel shall have a back-up battery supply system of ample capacity and approved by PA.

3. The Local Control Panel shall be wired with provisions for tie-in with the Building's Fire Alarm System. Tenant shall provide

conduit and wire to the nearest point of connection to the Building Fire Alarm System. Terminations to the Building Fire Alarm System shall be performed by the Port Authority.

4. All "Tenant-required" sprinkler alarms shall be wired to addressable device adapter modules as manufactured by Cerberus

I. EMERGENCY SMOKE PURGE MANUAL PULL STATION

1. The Tenant shall install a Manual pull station with break glass rod, provided with an engraved nameplate with the legend "EMERGENCY SMOKE PURGE". The pull station shall be Model MS-MI with MS-GR glass rod and MS-SB surface-mounted backbox as manufactured by Cerberus Pyrotronics.

2. For Smoke Purge Activation, See Section 18, Attachment M1.

J. SPRINKLER ALARMS

Sprinkler alarms have been provided by the Port Authority. However, should the Tenant require his own internal alarm, he must conform to the Section titled “Local Control Panel and Emergency Panel Supply.

The following Design Criteria shall be used to properly size and design Tenant HVAC and smoke purge systems to meet the Port Authority (PA) Standards for the Bus Terminal.

A. GENERAL

1. The tenant HVAC systems are to be designed so that conditioned air is not taken from air conditioned public spaces.

2. The Tenant shall provide complete automatic temperature controls to control the space conditions in his area.

3. Chilled water will be shut down during the winter season.

4. Heating hot water for HVAC will be shut down during the summer season.

5. Steam for HVAC will not be provided during the summer season.

6. A time clock shall be provided for off-hours A.C. shutdown by the Tenant.

7. The Tenant shall furnish and install automatic dampers for temperature control and smoke purge requirements.

B. OUTSIDE AIR

A duct will provide each leasehold with outside air, filtered and preheated to 37°F minimum, if required. The final design criteria for the use of outside air shall be:

1.	Minimum	0.30 cfm/sf
2.	Maximum	1.2 cfm/sf
3.	Supply Pressure at connection to PA duct	Not less than 0.00 inches water

C. SPILL AIR

A spill air duct connection will be provided for each leasehold not having direct access to spill air discharge louvers, allowing for the carrying away and discharge of spill air directly to the outdoors.

Spill air CFM should equal outside air CFM less any local exhaust, and an exfiltration allowance of approximately 10% of supply air quantity.

Return or spill air fan shall be sized to satisfy the smoke purge Requirements, as described hereinafter under Smoke Purging; otherwise, a separate smoke purge system, including a dedicated smoke purge exhaust fan, shall be provided by the Tenant.

D. CHILLED WATER

Valved supply and return connections will be provided by the PA with a cooling capacity as follows: To maintain leasehold at 78°F, 50% RH, with 0.30 cfm/sf outside air at 91°F DB, 75°F WB, 6 watts/sf electrical load, 50 sf/person occupancy, plus solar exposure and transmission heat gain, where such exists.

Chilled water temperature: Supply is 45°F, return is 60°F. Available pressure differential between supply and return is 12 psi, and working pressure is 125 psig. The Control valve shall be two-way modulating type and valve operations shall be sized to shut the valve against a 50 psig differential. Tenant shall provide the drain piping necessary to carry the cooling coil condensate from his A/C equipment, for spillage into Tenant's own drain facility.

E. STEAM (SOUTH WING ONLY)

A valved connection for steam will be provided by the PA with 15 psig at the point of connection. A valved connection at the PA's condensate return line will also be provided by the PA for connection by the Tenant.

F. HEATING HOT WATER (NORTH WING ONLY)

Valved supply and return connections will be provided by the PA as follows:

To provide heating capacity for the Tenant HVAC system such that a

leasehold is maintained at 70 ^{o}F indoor temperature, with 5°F outdoor.

Heating hot water range is 180°F supply 140°F return.

Available pressure differential between supply and return is 6 psi, working pressure is 125 psif. Control valve shall be two-way modulating type, and valve operator shall be sized to shut the valve against a 50 psig differential pressure.

A baseboard radiation heating system is provided for leasehold(s) exposed to the outdoors, sized to maintain a 50°F minimum leasehold, with 5°F outdoors, when the Tenant HVAC system is not operating.

G. SMOKE PURGING

1. Fan Capacity:

   The Tenant shall install a new exhaust fan to provide exhaust at a minimum of 1.5 cfm/sf or 6 air changes per hour, whichever is greater, for a store with a closed storefront, or a minimum 200 FPM velocity through an open storefront leading to the public areas, when the smoke purge is automatically or Manually activated.

2. Equipment:

   a. The entire smoke purge system, including exhaust fan, damper, discharge louver, duct connection to outdoors, etc., shall be furnished and installed by the Tenant.

   b. Where applicable, and if adequate size is available, the existing spill air duct may be utilized as a smoke purge exhaust duct. Connection to existing spill air duct shall be provided by the Tenant.

3. When the return air fan is used for smoke purge, the Tenant shall provide all necessary motorized dampers in spill and return air ducts.

4. Concourse-to-Tenant Space Make-up Air Transfer Duct:

The Tenant shall provide transfer duct with motorized fire damper, to permit flow of make-up air from the concourse to the tenant space during smoke purge operation.

H. TEMPERED OUTSIDE AIR SUPPLY

A capped connection is provided from a tempered (37°F) air duct, located in the concourse ceiling. Tenant shall furnish and install all ductwork from this connection to his A/C equipment.

I. ELECTRICAL WIRING

Refer to Section 18, Attachment E1 for electrical wiring requirements for HVAC.

J. SMOKE DETECTORS

1. The Tenant shall provide smoke detectors in the return air duct, as well as downstream of the filters in the air handling unit supply duct. In addition, the Tenant shall provide area smoke detectors on the basis of a minimum of one (1) area detector per 900 sf. For requirements of duct and area smoke detector, refer to Section 18, Attachment E1.

2. HVAC and Area Smoke Detectors shall:

   a. Provide an audio-visual signal at the Local Control Panel, specified herein in Section 18, Attachment E2.

   b. Activate the smoke purge mode of the Tenant's A.C. system.

K. HVAC CONTROL - SMOKE PURGE MODE

1. Automatic Smoke Purge Cycle:

   Upon activation of an HVAC or area smoke detector, an alarm shall be initiated, the supply air fan shall stop, the outside air and return air dampers shall close, the spill air damper shall open fully, and the return air fan, if designated as a smoke purge fan, shall keep running; otherwise, it shall also stop, and the dedicated smoke purge fan shall start, bypassing all other controls.

   In the event that activation of the area smoke detector(s) occurs at night when the A.C. system is off, the return air fan, if designated as a smoke purge fan, or the dedicated smoke purge fan shall start, and the dampers shall be positioned as described above.

2. Manual Smoke Purge Cycle:

   a. Local Manual Control shall originate from the Local Control

Panel, specified in Section 18, Attachment E2.

b. Provision shall also be made for accomplishing the Tenant's smoke purge cycle remote-Manually from the Manual Pull Station, specified herein in Section 18, Attachment E2.

L. LOCAL CONTROL PANEL AND EMERGENCY POWER SUPPLY

For requirements for the Local Control Panel, and for the emergency Power Supply to the Local Control Panel, refer to Section 18, Attachment E2.

M. MANUAL PULL STATION/BREAK GLASS EMERGENCY SWITCH (TENANT SPACES)

Install a Manual pull station with break glass rod. For requirements refer to Section 18, Attachment E2.

N. KITCHEN EXHAUST

Tenants requiring kitchen exhaust systems shall provide New York City approved hoods, ductwork, grease/vapor removal devices, and fire extinguishing equipment.

This page is intentionally left blank.

The following Design Criteria shall be used to properly size and design Tenant plumbing and fire protection systems to meet the Port Authority (PA) Standards for the Bus Terminal.

A. GENERAL

1. Control valves shall be located in spaces immediately accessible to PA staff at all times.

2. Hangers shall be supported from building steel framing members. Where none are available, miscellaneous steel supports between building framing members shall be provided.

3. When shutdowns of existing systems become necessary, the Contractor shall notify the Port Authority Engineer who will make the necessary arrangements required for the shutdown. Notification of any planned shutdown shall be made to the Port Authority Engineer at least 72 hours in advance.

B. PLUMBING

1. All sanitary piping 4 in. and larger shall be service weight cast iron “No-Hub” with couplings consisting of a neoprene gasket and stainless steel clamp assembly. Couplings shall be “Clamp-All” or manufactured by Clamp-All Corporation or “Husky” SD Series 4000 as manufactured by Anaheim Foundry Company.

2. Support “No-Hub” cast iron piping at 5’-0” intervals and on each side of each coupling assembly.

C. FIRE PROTECTION

All tenant spaces shall be sprinklered.

1. Sprinkler systems shall be hydraulically designed. A pipe schedule design may be used only for minor renovation work that doesn’t change the number of heads and relocates only a few existing sprinkler heads.

2. All sprinkler piping shall be standard weight, Schedule 40 black steel pipe. All dry and pre-action sprinkler system piping and fittings shall be galvanized.
3. Victaulic fittings are not permitted to be used for size 2-1/2 in. and under unless otherwise approved.
4. Supervised valves shall be installed with tamper switches.

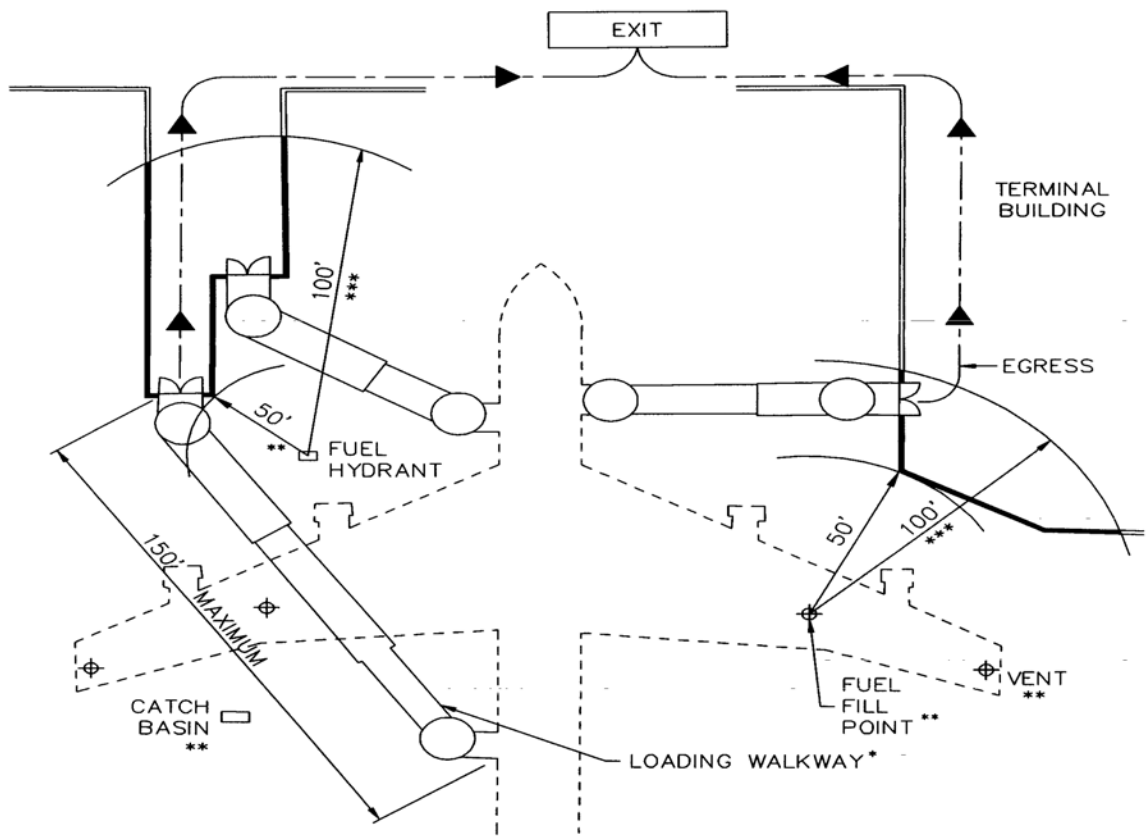

Notes:

*	For airport loading walkway design criteria, see Sections 6.II.G and 13.III.C of this Manual.
**	For clearance of points of potential fuel spillage, see Section 13.III.B.1 of this Manual.
***	For protection of window glass, see Section 13.III.B.2 of this Manual.

This page is intentionally left blank.

T1 **INDEX OF TRAFFIC STANDARD DETAILS**

NUMBER	TITLE
	Legends, Notes and Abbreviations TD10
TD 010.01	Traffic Symbols Legend
TD 010.02	List of Traffic Abbreviations
TD 010.03	Maintenance of Traffic Symbols and Legend
TD 010.04	General Traffic Notes
TD 010.05	Maintenance of Traffic Notes
TD 010.06	General Notes
	Traffic Signals TD20
TD 020.01	Type "T" Traffic Signal Pole and Truss Type Mast Arm Assembly
TD 020.02	Type "K" Traffic Signal Pole and Truss Type Mast Arm Assembly
TD 020.03	Type "K-H" Traffic Signal Pole and Truss Type Mast Arm Assembly
TD 020.04	Type "S" Steel Traffic Signal Pole, Arm and Base
TD 020.05	Pull Box, Frame, Cover, and Loop Detector Splice Box
TD 020.06	Conduit Installation
TD 020.07	Aluminum Traffic Signal Pole Foundation (SFT, SPF, SFK)
TD 020.08	Aluminum Traffic Signal Pole Foundation (SFK-H)
TD 020.09	Steel Traffic Signal Pole Foundation
TD 020.10	Type "P" Controller Cabinet Foundation
TD 020.11	"T" and "K" Poles - Elevation, Show Base, Cable Outlet and Cast Cap
TD 020.12	"T" Pole Transformer Base
TD 020.13	"K" Pole Transformer Base
TD 020.14	"T" Pole Truss Type Mast Arm, Clamp and End
TD 020.15	"K" Pole Truss Type Mast Arm, Clamp and End
TD 020.16	Traffic Signal Pedestal Assembly
TD 020.17	Pole Clamp Mounting Assemblies
TD 020.18	Signal Head Pole Top and Bracket Mounting
TD 020.19	Universal Joint, Wire Outlet, Elevation Plumbizer and Mast Arm Slip Fitter
TD 020.20	Signal Head Mid Mast-Arm and Safety Chain Mounting
TD 020.21	Hollow Spider Assembly

TD	020.22	Signal Heads and Backplate
TD	020.23	Overhead Mast Arm Swing Sign Bracket
TD	020.24	P Cabinet Layout
TD	020.25	Controller Cabinet Skirt for UPS
TD	020.26	Loop Detector Installation
TD	020.27	Cable Identification Tag
TD	020.28	Span Wire Mounted Installation
TD	020.29	Span Wite Traffic Signal Pole Foundation
TD	020.30	Traffic Signal Assembly
TD	020.31	Temporary Span Wire Signal Installation 1
TD	020.32	Temporary Span Wire Signal Installation 2
TD	020.33	Temporary Mast Arm and Pedestal
TD	020.34	Video Camera Mounting Details

Sign Mounting TD30

TD	030.01	Breakaway Sign Supports and U-Post Assembly Details
TD	030.02	Breakaway Support System For Sign Post Break - Safe Model AP
TD	030.03	Breakaway Support System For Sign Post Break - Safe Model AS4
TD	030.04	Breakaway Support System For Sign Post Break - Safe Model B525
TD	030.05	Sign Mounted on Concrete Barrier
TD	030.06	Standard Sign Assembly Details 1 of 3
TD	030.06	Standard Sign Assembly Details 2 of 3
TD	030.06	Standard Sign Assembly Details 3 of 3
TD	030.07	Standard Height and Lateral Location for Traffic Sign Assembly
TD	030.08	J-Channel and H-Channel Details
TD	030.09	Sign Height and Lateral Positioning to Minimize Specular Glare
TD	030.10	Flashing Beacon Sign Assembly
TD	030.11	Bucklestrap, Clamp and Clip Mounting Detail
TD	030.12	Square Post Base Plate For Sidewalk Sign Mounting
TD	030.13	Suspended Ceiling Mounting Detail
TD	030.14	Concrete Wall, Wire Cage and Steel Column Mounting Details
TD	030.15	Pipe Column Floor Mounting Detail
TD	030.16	Fire Standpipe Sign Mounting Details
TD	030.17	Overhead Sign Bridge Clearance Mounting Details
TD	030.18	Floor Mounted Directory Sign Details
TD	030.19	CMS Sign Mounting Details
TD	030.20	Alternative Double Posted Mounting Details
TD	030.21	(JFKIA) Square Post Large Guide Sign Assembly Details
TD	030.22	Wood Sign Post Details

TD	030.23	(NJ Breakaway) Typical Large Guide Sign Support Details (1 of 5)
TD	030.23	(NJ Breakaway) Typical Large Guide Sign Support Details (2 of 5)
TD	030.23	(NJ Breakaway) Typical Large Guide Sign Support Details (3 of 5)
TD	030.23	(NJ Breakaway) Typical Large Guide Sign Support Details (4 of 5)
TD	030.23	(NJ Breakaway) Typical Large Guide Sign Support Details (5 of 5)
TD	030.24	(NJ Non-Breakaway) Typical Large Guide Sign Support Details (1 of 2)
TD	030.24	(NJ Non-Breakaway) Typical Large Guide Sign Support Details (2 of 2)
TD	030.25	(NY State) Typical Large Guide Sign Assembly 1 of 4
TD	030.25	(NY State) Typical Large Guide Sign Assembly 2 of 4
TD	030.25	(NY State) Typical Large Guide Sign Assembly 3 of 4
TD	030.25	(NY State) Typical Large Guide Sign Assembly 4 of 4

Sign Layout Data TD40

TD	040.01	Typical JFK Airport Pedestrian and Vehicular Wayfinding Signs
TD	040.05	Standard Arrow Details
TD	040.06	Typical JFK Airport Guide Sign Standard Details
TD	040.07	Typical LGA Airport Guide Sign Standard Details
TD	040.08	Typical EWR Airport Guide Sign Standard Details
TD	040.09	Sign Fabrication Details
TD	040.10	Sign Cover Details
TD	040.20	Regulatory Sign Data Sheet 1 of 2
TD	040.20	Regulatory Sign Data Sheet 2 of 2
TD	040.21	Warning Sign Data Sheet 1 of 2
TD	040.21	Warning Sign Data Sheet 2 of 2
TD	040.30	P.A. Standard Signs Sign Data Sheet 1 of 4
TD	040.30	P.A. Standard Signs Sign Data Sheet 2 of 4
TD	040.30	P.A. Standard Signs Sign Data Sheet 3 of 4
TD	040.30	P.A. Standard Signs Sign Data Sheet 4 of 4

Pavement Markings TD50

TD	050.01	Notes And Longitudinal Markings
TD	050.02	Transverse Markings
TD	050.03	Symbol And Arrow Markings 1 of 2
TD	050.03	Symbol And Arrow Markings For Bicycle 2 of 2
TD	050.04	Word Markings 1 of 2
TD	050.04	Word Markings 2 of 2
TD	050.05	Lane and Ramp Pavement Markings 1 of 2
TD	050.05	Lane and Ramp Pavement Markings 2 of 2
TD	050.06	Parking Lot Markings

TD	050.07	Accessible Parking for People with Disabilities
TD	050.08	Intersection Markings 1 of 3
TD	050.08	Intersection Markings 2 of 3
TD	050.08	Intersection Markings 3 of 3
TD	050.09	Hatch Island Detail and Temporary Pavement Markings
TD	050.10	Airside Markings and Sign Placement

Delineation Devices and Markers TD60

TD	060.01	Safety Curb
TD	060.02	Qwick Kurb
TD	060.03	Dura-Curb
TD	060.04	Delineator Details and Mounting 1 of 3
TD	060.04	Delineator Details and Mounting 2 of 3
TD	060.04	Delineator Details and Mounting 3 of 3
TD	060.05	Delineator Application Placement and Spacing
TD	060.06	Reflectorized Pavement Markers, Legend and Placement Detail
TD	060.07	Reflectorized Pavement Markers Location Details 1 of 2
TD	060.07	Reflectorized Pavement Markers Location Details 2 of 2
TD	060.08	Object Markers

Permanent Impact Attenuators TD70

TD	070.01	Quadguard Impact Attenuators with Tension Strut Backup
TD	070.02	Quadguard Impact Attenuators with Concrete Backup
TD	070.03	REACT 350
TD	070.04	TRACC
TD	070.05	CAT-350
TD	070.06	Inertial Sand Filled Barrel Arrays
TD	070.07	Nose Cover Marker for Attenuator End Treatment

Maintenance of Traffic Devices TD100 to TD150

a. Channelizing Devices TD100

TD	100.01	Traffic Cones, Plastic Drums and Barriacades Types I, II, & III

b. Temporary Barrier TD110

TD	110.01	Precast Concrete Construction Barrier Type I
TD	110.02	Precast Concrete Construction Barrier Type 4 (Alternates A & B)
TD	110.03	Precast Concrete Construction Barrier Type 4 Joint Connection and Reinforcement Details

TD 110.04	Precast Concrete Construction Barrier Tapered End Section
TD 110.05	Precast Concrete Construction Barrier with Chain Link Fence, Sign Mount and Glare Screen Details
TD 110.06	Water Filled Traffic Barrier
TD 110.07	Timber Barricades Type I and II

c. Temporary Impact Attenuators TD120

TD 120.01	Inertial Sand Filled Barrel Arrays
TD 120.02	Quadguard CZ, TRACC and NEAT Crash Cushions
TD 120.03	ADIEM II Crash Cushion

d. Construction Signs TD130

TD 130.01	Construction Sign Data Sheet 1 of 2
TD 130.02	Construction Sign Data Sheet 2 of 2

e. Typical Lane Closure and Reduction Details and Notes TD140

TD 140.01	Typical Lanes Closures and Reduction
TD 140.02	Croswalk Closing and Access Details
TD 140.03	Traffic Control Device Placement, Ramping and Work Area Details

f. Miscellaneous Devices TD150

TD 150.01	Stop/Slow Paddle
TD 150.02	FASU
TD 150.03	Portable Sign Support Details
TD 150.04	Video Detection System Details
TD 150.06	Temporary Roadway Plates

<u>Permanent Barriers TD200</u>

TD 200.01	Type A Concrete Barrier Curb, Dowelled
TD 200.02	Variable Width Median Barrier
TD 200.03	On Bridge Concrete Barrier Curb
TD 200.04	Median Concrete Barrier Curb
TD 200.05	Concrete Barrier Precast
TD 200.06	Concrete Barrier Cast-in-Place
TD 200.07	Concrete Barrier Machine Formed
TD 200.08	Concrete Barrier Single Slope
TD 200.09	Concrete Barrier Half Section Single Slope
TD 200.10	Single-Slope Concrete Barrier Terminal Section-Ramped Terminal
TD 200.11	Barrier Transition Details

TD 200.12	Transition Between Wide and Normal Width Single Slope Concrete Median Barrier
TD 200.13	Transition of Concrete Barrier Between Standard (NJ) and Single Slope Concrete Shapes
TD 200.14	Concrete Barrier with Light Post Detail

Guide Rail Details TD300

TD 300.01	Heavy Post Block-Out W-Beam Guide Rail
TD 300.02	Heavy Post Block-Out W-Beam Post and Standard Guide Rail Hardware Details
TD 300.03	Heavy Post Block-Out Thrie-Beam Guide Rail
TD 300.04	Heavy Post Block-Out Modified Thrie-Beam Guide Rail
TD 300.05	Heavy Post Block-Out Dual Faced W-Beam Guide Rail
TD 300.06	Heavy Post Blocked-Out W-Beam Median Barrier
TD 300.07	Guiderail Post Installation Detail
TD 300.08	Type II End Assembly Details
TD 300.09	Typical Treatments for Buried Ends (Rock or Soil)
TD 300.10	W-Beam Guide Rail Anchorages
TD 300.11	Thrie Beam & W Beam Guide Rail Terminal Connection & End Section
TD 300.12	Guide Rail Attachments General Notes and Rub Rail Details
TD 300.13	Box Beam End Assembly Type III Grading and Layout Details
TD 300.14	Box Beam Type I End Assembly
TD 300.15	Box Beam Tangent Section and Treatment For Buried End Detail
TD 300.16	Box Beam Median Barrier Details
TD 300.17	Box Beam Guide Rail Transition to W-Beam Guide Rail
TD 300.18	Box Beam Connections (On-End & Off-End) To Concrete Barrier and Anchor Bolt Detail
TD 300.19	Box Beam Transition To Parapet or Barrier Connection
TD 300.20	Box Beam Transition to Pylon and to Railing Transition Wall
TD 300.21	Box Beam Transition to Variable Width Concrete Barrier
TD 300.21	W-Beam Median Guide Rail Installation Layout Detail
TD 300.22	W-Beam Guide Rail Installation Layout Detail
TD 300.30	Shedding Type Gating End Terminals (SRT-350)
TD 300.31	Parallel Type Gating End Terminals (ET 2000)
TD 300.32	Heavy Post Blocked-Out W-Beam End Treatment
TD 300.40	Transition Between Heavy Post Block-Out W-Beam Single Guide Railing and Slope Half Section Concrete Barrier
TD 300.41	Transition Between Heavy Post Block-Out W-Railing and Half Section Concrete Barrier
TD 300.42	Transition Between Heavy Post Block-Out W-Median Barrier & Concrete Median Barrier (Sheet 1 of 2)
TD 300.42	Transition Between Heavy Post Block-Out W-Median Barrier and Concrete

		Median Barrier (Sheet 2 of 2)
TD	300.43	Transition Between HPBO W-Beam Median Barrier and Single Slope Concrete Median Barrier
TD	300.44	Transition Between HPBO W-Beam Median Barrier And Jersey Shape Concrete Median Barrier
TD	300.45	Guide Rail Attachment To Sidewalk, Footing and Parapet
TD	300.46	Guide Rail Attachment-New Construction New Jersey Barrier Shape Parapet (No Roadway Curbing on Approach)
TD	300.47	Guide Rail Attachment-New Construction New Jersey Barrier Shape Parapet (With Roadway Curbing on Approach)
TD	300.48	Guide Rail Attachment - New Construction (Sidewalk With Parapet)
TD	300.49	Guide Rail Attachement - New Construction (Sidewalk with Steel Railing)
TD	300.50	Transition Between Box Beam Guide Rail and Single Slope Half Section Concrete Barrier (Sheet 1 of 3)
TD	300.50	Transition Between Box Beam Guide Rail and Single Slope Half Section Concrete Barrier (Sheet 2 of 3)
TD	300.50	Transition Between Box Beam Guide Rail and Single Slope Half Section Concrete Barrier (Sheet 3 of 3)
TD	300.51	Transition Between Box Beam Median Barrier and Single Slope Concrete Median Barrier (Sheet 1 of 3)
TD	300.51	Transition Between Box Beam Median Barrier and Single Slope Concrete Median Barrier (Sheet 2 of 3)
TD	300.51	Transition Between Box Beam Median Barrier and Single Slope Concrete Median Barrier (Sheet 3 of 3)
TD	300.52	NonVegetative Surface Details

Traffic Calming Devices TD410

TD	410.01	Speed Hump
TD	410.02	Rumble Strips and Toll Plaza Approach Rumble Strips
TD	410.03	Shoulder Grooving For Rumble Strips

Traffic-Related Civil Details TD420

TD	420.01	End of Curb Treatment (CD60.003)
TD	420.02	Curb to Header Transition (CD60.003)
TD	420.03	Concrete Curb Details (CD60.003)
TD	420.04	Steel Face Curb - Type SF (CD60.004)
TD	420.05	Drop Curb and Driveway Detail (CD62.022)
TD	420.06	Railroad Track in Open Paved Areas Detail (CD82.001)
TD	420.07	Rubber Railroad Crossing Detail (CD82.006)
TD	420.08	Pipe Guard Spacing Details (CD90.001)
TD	420.09	Pipe Guard With Footing Detail (CD90.002)
TD	420.10	Pipe Guard With Footing (Heavy Duty) (CD90.003)

TD	420.11	Pipe Guard for Bus Parking Areas (CD90.005)
TD	420.12	Metallic Coated Chain Link Fence-EWR (CD90.010)
TD	420.13	Metallic Coated Steel Chain Link Fence (CD90.011)
TD	420.14	Timber Bumper Details (CD90.030)
TD	420.15	Timber Barricade - Type 1 (CD90.031)
TD	420.16	Sidewalk Curb Ramp Detail
TD	420.17	Detectable Warning Surface
TD	420.18	Precast Concrete Bumpers

SPECIAL INSPECTION ITEMS-
NEW YORK CITY FACILITIES

Special Inspection Category	Sub Category	Building Code Section
Foundations	1. Soils Investigation, borings, and test pits 2. Soils -Site Preparation 3. Excavation, Sheeting, Shoring, and Bracing 4. Soils-Fill Placement and In-place Density 5. Pile Foundation & Drilled Pier Installation 6. Pier Foundation 7. Underpinning	1. BC 1704.7.4 2. BC 1704.7.1, 1704.7.2, and 1704.7.3 3. BC 1704.19 and 3304.4.1 4. BC 1704.7.1, 1704.7.2, and 1704.7.3 5. BC 1704.8 and 1808.2.2 6. BC 1704.9 7. BC 1704.9.1
Concrete	8. Cast in-place & Precast 9. Prestressed Concrete	8. BC 1704.4 9. BC 1707.4
Steel	10. Erection 11. High Strength Bolting 12. Cold –formed steel	10. BC 1704.3.2 11. BC 1704.3.3 12. BC 1704.3.4
Welding (2RCNY 25-BSA Rule)	13. Steel 14. Aluminum 15. High pressure Steam Piping 16. High Pressure Gas Piping	13. BC 1704.3.1 14. BC 1704.26.1 15. BC 1704.17 16. BC 1704.18
Wood Construction	17. Prefabricated wood I-joists and metal plate connected wood trusses	17. BC 1704.6
Masonry	18. Masonry	18. BC 1704.5
Structural Safety	19. Stability 20. Mechanical Demolition	19. BC 1704.19 20. BC 1704.19
Exterior Walls	21. Wall Panels, Curtain Walls, and Veneers 22. Exterior Insulation and Finish Systems (EIFS)	21. BC 1704.10 22. BC 1704.12
Fire Protection Systems & Fire Resistant Construction	23. Sprayed Fire-resistant Materials 24. Firestop, Draftstop, and Fireblock Systems 25. Smoke Control Systems 26. Standpipe Systems 27. Sprinkler Systems 28. Fire Alarm Test 29. Emergency Power Systems	23. BC1704.11 24. BC1704.25 25. BC 1704.14 26. BC 1704.21 27. BC 1704.22 28. BC 29. BC

Special Inspection Category	Sub Category	Building Code Section
Plumbing & Mechanical Systems	30. Mechanical Systems 31. Fuel-oil Storage and Fuel-oil Piping Systems 32. Heating Systems	30. BC 1704.15 31. BC 1704.16 32. BC 1704.23
Others	33. Chimneys 34. Site Storm Drainage Disposal and detention 35. Flood Hazard Mitigation 36. Photoluminescent Exit Path Markings 37. Seismic Isolation Systems	33. BC 1704.24 34. BC 1704.20 35. BC G105 36. 1RCNY 1026-01 37. BC1707.8

Special Inspection Category	Sub Category	Building Code Section
Foundations	1. Existing site soil conditions, fill placement, and load bearing requirements 2. Soils -Site Preparation 3. Excavation, Sheeting, Shoring, and Bracing 4. Soils-Fill Placement and In-place Density 5. Pile Foundation & Drilled Pier Installation 6. Pier Foundation 7. Underpinning	7. 1704.7 8. BC 1704.7.1, 1704.7.2, and 1704.7.3 9. BC 1704.19 and 3304.4.1 10. BC 1704.7.1, 1704.7.2, and 1704.7.3 11. BC 1704.8 and 1808.2.2 12. BC 1704.9 13. BC 1704.9.1
Concrete	8. Cast in-place & Precast 9. Prestressed Concrete	14. BC 1704.4 15. BC 1707.4
Steel Construction	10. Inspection of Fabricators 11. Welding 12. High Strength Bolting 13. Framing details	16. 1704.2 17. 1704.3.1 18. 1704.3.3 19. 1704.3.2
Welding	14. Steel 15. Aluminum 16. High pressure Steam Piping 17. High Pressure Gas Piping	20. BC 1704.3.1 21. BC 1704.26.1 22. BC 1704.17 23. BC 1704.18
Wood Construction	18. Prefabricated wood I-joists and metal plate connected wood trusses	24. BC 1704.6
Masonry	19. Masonry	25. BC 1704.5
Structural Safety	20. Stability 21. Mechanical Demolition	26. BC 1704.19 27. BC 1704.19

Special Inspection Category	Sub Category	Building Code Section
Exterior Walls	22. Wall Panels, Curtain Walls, and Veneers 23. Exterior Insulation and Finish Systems (EIFS)	28. BC 1704.10 29. BC 1704.12
Fire Protection Systems & Fire Resistant Construction	30. Sprayed Fire-resistant Materials 31. Smoke Control Systems	32. BC1704.11 33. BC 1704.14
Special Cases	1. Alternative material 2. Unusual applications of materials 3. Materials and systems requiring additional instructions from manufacturers	34. 1. BC 1704.13

SPECIAL INSPECTION ITEMS- NEW YORK STATE FACILITIES

Special Inspection Category	Sub Category	Building Code Section
Foundations	7. Existing site soil conditions, fill placement, and load bearing requirements 8. Soils -Site Preparation 9. Excavation, Sheeting, Shoring, and Bracing 10. Soils-Fill Placement and In-place Density 11. Pile Foundation & Drilled Pier Installation 12. Pier Foundation 13. Underpinning	4. 1704.7 5. BC 1704.7.1, 1704.7.2, and 1704.7.3 6. BC 1704.19 and 3304.4.1 7. BC 1704.7.1, 1704.7.2, and 1704.7.3 8. BC 1704.8 and 1808.2.2 9. BC 1704.9 10. BC 1704.9.1
Concrete	14. Cast in-place & Precast 15. Prestressed Concrete	11. BC 1704.4 12. BC 1707.4
Steel Construction	16. Inspection of Fabricators 17. Welding 18. High Strength Bolting 19. Framing details	13. 1704.2 14. 1704.3.1 15. 1704.3.3 16. 1704.3.2
Welding	20. Steel 21. Aluminum 22. High pressure Steam Piping 23. High Pressure Gas Piping	17. BC 1704.3.1 18. BC 1704.26.1 19. BC 1704.17 20. BC 1704.18
Wood Construction	24. Prefabricated wood I-joists and metal plate connected wood trusses	21. BC 1704.6
Masonry	25. Masonry	22. BC 1704.5
Structural Safety	26. Stability 27. Mechanical Demolition	23. BC 1704.19 24. BC 1704.19
Exterior Walls	28. Wall Panels, Curtain Walls, and Veneers 29. Exterior Insulation and Finish Systems (EIFS)	25. BC 1704.10 26. BC 1704.12
Fire Protection Systems & Fire Resistant Construction	30. Sprayed Fire-resistant Materials 31. Smoke Control Systems	27. BC1704.11 28. BC 1704.14
Special Cases	29. Alternative material 30. Unusual applications of materials Materials and systems requiring additional instructions from manufacturers	1. BC 1704.13

This page is intentionally left blank.

LS1 **LANDSCAPE ARCHITECTURAL DESIGN AT AIRPORTS**

The following criteria shall govern the landscape architectural design at the airports.

I. GENERAL

The goal is to provide a quality landscape environment that complements the design elements (roadways, signage, exists and entrances to frontages and parking facilities and residual open space) serving the airport patron while providing a minimum of attractants to birds,

In order to achieve this goal a successful landscape must satisfy these objectives:

a. A design that is approved by the FAA/USDA Wildlife Damage Control Division.

b. A design that is incorporated into an area suitable for vigorous plant growth and maintenance.

c. A design that includes a sustainable form of irrigation.

d. A design that includes under a separate, stand alone landscape contract that requires a minimum two year maintenance follow up by the installing Contractor, who shall have as his superintendent over the entire installation and maintenance a State Certified Arborist knowledgeable and experienced in this type of Work.

e. <u>A LANDSCAPE DESIGN LEAST LIKELY TO ATTRACT BIRDS SHOULD HAVE THE FOLLOWING QUALITIES:</u>

(1) Avoid plant material and design features that provide birds with a source of FOOD, WATER, COVER and SPATIAL DOMAIN.

(2) Canopy trees should be planted in linear rows, canopies spaced 15-20 feet apart at maturity. Adjacent canopies should never be touching.

(3) Shrubs and small trees should be used moderately and not be planted under or directly adjacent to canopy trees.

(4) Shrub beds should be small in size and discontinuous.

(5) Flowering ornamental trees should be limited in quantity.

(6) Groundcover should be well-manicured, healthy, dense, moderately tall lawn, a fruitless low growing groundcover, gravel or bark mulch.

(7) All plants should be planted at the same size and time.

II. PLANT MATERIAL

a. Trees:

Trees shall be selected that meet the following criteria:

(1) To withstand pollution and tough urban environments,
(2) To tolerate wind and drought
(3) To tolerate excessive road de-icing salts and salt laced prevailing winds
(4) To be unattractive to birds as a food source and meet FAA approval
(5) To be unattractive to birds as a roosting site and meet FAA approval
(6) To be primarily deciduous, since evergreen trees are an ideal bird habitat
(7) To have interesting flowers, fall color, size, shape or habit
(8) To be obtainable on the commercial market

Sample List

Gleditsia triacanthos ‘Halka’
Moraine Honeylocust
Quercus phellos
Willow Oak
Zelkova serrata
Japanese Zelkova

b. Ornamental trees:

Ornamental trees shall meet the same criteria as trees

Sample List

Chioanthus virginicus
Fringe Tree
Cornus x Ruth Ellen

Stellar White Dogwood
Koelreuteria paniculata
Golden Rain Tree
Malus Spring Snow (Fruitless)
Spring Snow Crabapple
Parrotia persica
Persian Parrotia
Syringa reticulata 'Ivory Silk'
Ivory Silk Lilac

c. Shrubs and groundcover:

Shrubs and groundcovers shall meet the same criteria as trees.

Abelia x grandiflora
Glossy Abelia
Forsythia x 'Goldtide'
Goldtide Forsythia
Hamamelis 'Arnold Promise'
Arnold Promise Witchhazel
Juniperus chinensis sargenti
Sargent's Chinese Juniper
Spiraea nipponica 'Snowmound'
Snowmound Spirea
Taxus x media wardii
Ward's Yew
Weigela florida 'Red Prince'
Purple Leaf Weigela

d. Seasonal display:

Caryopteris x clandonensis 'Blue Mist'
Blue Mist Caryopteris
Echinacea purpurea 'Magnus'
Magnus Purple Coneflower
Eupatorium purpureum 'Big Umbrella'
Big Umbrella Joe Pye Weed
Eupatorium purpureum 'Gateway'
Gateway Joe Pye Weed
Hemerocallis 'Happy Returns'
Happy returns Daylily
Hemerocallis ' Stella de Oro'
Stella de Oro Daylily
Nepeta faassenii 'Walkers Low'
Walkers Low Catmint
Pennisetum alopcuroides "Cassian'

Cassian Fountain Grass
Rudebeckia fulgida ‘Goldsturm’
Black-eyed Susan
Sedum x ‘Autumn Joy’
Autumn Joy Sedum
Stachys byzantina ‘Helene von Stein’
Lambs Ear

e. Bulbs

Daffodil x ‘Ice Follies’
Ice Follies Daffodil
Daffodil x ‘King Alfred’
King Alfred Daffodil

f. Lawn

Select cultivars that can thrive on low nutrient, low water availability and that are “90% endophyte enhanced” variety.

III. STANDARDS

A. Federal aviation Administration (FAA) AC 15/5200-33A – Hazardous Wildlife Attractants on or near Airports
B. USDA- Asian Long Horned Beetle Quarantine and Regulations
C. American Standard For Nursery Stock, ANSI Z60.1-2004, American Nursery & Landscape Association