Torres Rojas, Genara

From:	jshapiro@dnainfo.com
Sent:	Wednesday, February 22, 2012 2:21 PM
To:	Duffy, Daniel
Cc:	Torres Rojas, Genara; Van Duyne, Sheree
Subject:	Freedom of Information Online Request Form

Information:

First Name: Julie
Last Name: Shapiro
Company: DNAinfo
Mailing Address 1: 810 Seventh Avenue
Mailing Address 2: Suite 800
City: New York
State: NY
Zip Code: 10019
Email Address: jshapiro@dnainfo.com
Phone: 6463856140
Required copies of the records: No

List of specific record(s):
Under the Freedom of Information Law, I am requesting the Port Authoritys Crane Status Reports as described on Page 4 of the March 5, 2009 Memorandum of Understanding between the Port Authority and the Department of Buildings. I would like all the Crane Status Reports for the World Trade Center site from March 5, 2009 to the present. Also, I am requesting Crane Records as described on Page 4 of the March 5, 2009 Memorandum of Understanding between the Port Authority and the Department of Buildings. Specifically I am requesting the Port Authoritys records on the crane that was involved in the Feb. 16, 2012 accident at 4 World Trade Center, including all of the specifications, permits and reports as described in the Records section on Page 4 of the Memorandum of Understanding. Please contact me if you have any questions. Thank you.

THE PORT AUTHORITY OF NY & NJ

Daniel D. Duffy
FOI Administrator

December 3, 2012

Ms. Julie Shapiro
DNAinfo
810 Seventh Avenue, Suite 800
New York, NY 10019

Re: Freedom of Information Reference No. 13024

Dear Ms. Shapiro:

This is a response to your February 22, 2012 request, which has been processed under the Port Authority's Freedom of Information Code (the "Code") for copies of all of the Crane Status Reports for the WTC site from 3/5/09 to the present, including records related to the crane that was involved in the 2/16/12 accident at 4 WTC.

Material responsive to your request and available under the Code can be found on the Port Authority's website at http://www.panynj.gov/corporate-information/foi/13024-WTC.pdf. Paper copies of the available records are available upon request.

Certain material responsive to your request is exempt from disclosure pursuant to exemptions (1) and (4) of the Code.

Please refer to the above FOI reference number in any future correspondence relating to your request.

Very truly yours,

Daniel D. Duffy
FOI Administrator

225 Park Avenue South
New York, , NY 10003
T: 212 435 3642 F: 212 435 7555

CURRENT CRANES

NYCDOB - C&D Jurisdiction Issue | **PANYNJ - REO Jurisdiction Issue**

Make and Model	Type	Location	Jurisdiction	NYCDOB CD #	CD Date Expiration	Owner / Vendor	Serial #	Year	Prototype No	Boom Length	Jib	Lift Capacity	NYCDOB CN #	CN # Date of Issuance	Date on Site	Contractor	Sub	Operator	License	License Exp Date	Actions Required or Comments	50 MPH winds	Operating Radius
WTC/Hub	WTC/Hub	WTC/Hub	WTC/Hub	WTC/Hub	WTC/Hub	WTC/Hub	WTC/Hub	WTC/Hub	WTC/Hub	WTC/Hub	WTC/Hub	WTC/Hub	WTC/Hub	WTC/Hub	WTC/Hub	WTC/Hub	WTC/Hub	WTC/Hub	WTC/Hub	WTC/Hub	WTC/Hub	WTC/Hub	WTC/Hub
FAVCO M760D Series 2	Tower-Mounted Lattice Boom	East Bathtub Transit Hall **WEST**	[redacted]	3554	9.30.12 (check 3.30.12) (wire 9.7.12)	Federated Equipment Co.	1164	2005	P-384	211'	NA	70 Ton	Filed w/ PANYNJ		9.9.11	DCM Erectors, Inc.	DCM Erect., Sobara, EIC, Perini	Kevin McPaul (Day) Brian Dwyer (Night)	B-5779 B-9676	10/31/2014 11/30/2012	**Inspection 12.29.11, exp.date under review**	Tie down boom in parked position	**N, E-70' W,S-110'**
Tandano TR450XL-4	Mobile Crane	1/9 Box Bent 150	[redacted]	3920	12/20/2012	Skanska	540482	2007	P-382	108'	50' (Stowed)	45 Ton	Filed w/ PANYNJ		6/2/2010	Skanska Granite	Skanska Granite	Wayne Fallen	A-9411	8/31/2014		retrack boom	**108 and clearance**
FAVCO M760D Series 2	Tower-Mounted Lattice Boom	East Bathtub Transit Hall **EAST**	[redacted]	4189	5.20.12, wire 10.14.12	Federated Equipment Co.	1473	2009	P-384	211'	NA	70 Ton	Filed w/ PANYNJ		6/6/2011	DCM Erectors, Inc.	DCM Erectors, Inc., Sorbara, EIC	Gerry Harney(day) Thomas Chorusey(night)	B-9061 B-9116	7/31/2012 2/28/2015	**Inspect 2.16.12, Load test completed 6.21.11**	weathervane @ 60' radius	**E, S and W 150', North 120'**
Liebherr LR1160	Crawler	Fulton Street East	[redacted]	3418	2/10/2013	Skanska	134061	2003		229'	NA	150 Ton	Filed w/ PANYNJ		7/17/2011	Skanska Granite	Skanska Granite	Owen James(day) Robert Friberg(night)	B-6714 B-5736	8/31/2014 12/31/2014		Boom Down	**E and S 225'**
Tandano TR450XL-4	Mobile Crane	West Haul Rd	[redacted]	3747	12.21.12	Bay Crane	540442	2006	P-382	108'	50' (Stowed)	45 Ton	Filed w/ PANYNJ		8/11/2011	Judlau	Judlau	Charles Noeth	B-9782	2/28/2014		retrack boom	**108 and clearance**
Grove RT600E	Mobile Crane	1/9 Box North	[redacted]	4206	4/26/2012	Tutor Saliba Corp	227768	2007	P-374	105'	NA	50 Ton	Filed w/ PANYNJ		9/26/2011	Tutor/Perini	Tutor/Perini	Walter Mysiuk(day) Lawrence Mysiuk(night)	A-7471 C1-7189	4/30/2012 5/31/2012		retrack boom	**E, S and W 105', North 50'**
WTC-1	WTC-1	WTC-1	WTC-1	WTC-1	WTC-1	WTC-1	WTC-1	WTC-1	WTC-1	WTC-1	WTC-1	WTC-1	WTC-1	WTC-1	WTC-1	WTC-1	WTC-1	WTC-1	WTC-1	WTC-1		WTC-1	WTC-1
FAVCO M760D	Tower-Mounted Lattice Boom	WTC-1 **South Core Crane # 2**	[redacted]	3742	3/11/2012 (wire rope 3.3.12)	Federated Equipment Co.	1167	2006	P-384	180'	N/A	65 Ton	Filed w/ PANYNJ	6/26/2008	5/18/2007	Tishman Constrcution Co.	DCM Erectors, Inc.	Phil McPaul	A-9226	4/30/2012	**Inspected 12.9.11 41st Jump on 2/6/12 to Elevation 1533'**	lock & tie off to Eng. Pt. See note below	**N-N/A, S-130, E-100, W-100**
FAVCO M760D	Tower-Mounted Lattice Boom	WTC-1 **North Core Crane # 1**	[redacted]	3743	3/11/2012 (wire rope 4.7.12)	Federated Equipment Co.	1166	2006	P-384	180'	N/A	65 Ton	Filed w/ PANYNJ	6/26/2008	4/18/2007	Tishman Constrcution Co.	DCM Erectors, Inc.	Danny Dunn	A-5956	8/31/2014	**Inspected 12.9.11 41st Jump on 2/6/12 to Elevation 1533'**	lock & tie off to Eng. Pt. See note below	**N-110, S-N/A, E-100, W-100**
			[redacted]																				
FAVCO STD-1500	Tower-Mounted Lattice Boom	WTC-1 Northwest Corner	[redacted]	2880	5.20.12	Federated Equipment Co.	351	1971	P-182	130'	NA	106 Ton	Filed w/ PANYNJ		8/30/2010	Tishman Constrcution Co.	Collavino Construction Co.	Thomas Gordon	B-9224	6/30/2012	**Inspected 2.17.12 21st Jump on 2/8/2012 to elev. 1313**	lock & tie off to Eng. Pt. See note above	**N-75, NE-90, S-75, E-N/A, NW-90, W-75**
Fassi	Knuckle boom	WTC-1 **North Core**	[redacted]	N/A	7.13.12	Collavino Construction Co.	1597	2009	F-800BXP	100'	N/A	22 ton	Filed w/ PANYNJ		10.9.09	Tishman Constrcution Co.	Collavino Construction Co.	John Scaffner	B-9227	11/30/2014	**OSHA Inspection**	N/A	**within core**
Fassi	Knuckle boom	WTC-1 **South Core**	[redacted]	N/A	7.13.12	Collavino Construction Co.	1596	2009	F-800BXP	100'	N/A	22 ton	Filed w/ PANYNJ		10.9.09	Tishman Constrcution Co.	Collavino Construction Co.	James Antretter	C1-9921	12/30/2014	**OSHA Inspection**	N/A	**within core**
Valla 25 E	25E-Electric	WTC 1	[redacted]	NA	see comments	Valla	9015	2010			N/A	2.25 ton	Filed w/ PANYNJ		11.24.10	Tishman Constrcution Co.	Benson Industries	Crew	N/A	N/A	**OSHA Inspection**	N/A	**within floor**
Valla 25 E	25E-Electric	WTC 1	[redacted]	NA	see comments	Valla	9016	2010			N/A	2.25 ton	Filed w/ PANYNJ		11.24.10	Tishman Constrcution Co.	Benson Industries	Crew	N/A	N/A	**OSHA Inspection**	N/A	**within floor**

hurricane- the boom on one crane is to be removed, & one crane weathervane w/ 180' boom at 70 degrees, 66' radius

Make and Model	Type	Location	Jurisdiction	NYCDOB CD #	CD Date Expiration	Owner / Vendor	Serial #	Year	Prototype No	Boom Length	Jib	Lift Capacity	NYCDOB CN #	CN # Date of Issuance	Date on Site	Contractor	Sub	Operator	License	License Exp Date	Actions Required or Comments	50 MPH winds	Operating Radius
NS11M&M	NS11M&M	NS11M&M	NS11M&M	NS11M&M	NS11M&M	NS11M&M	NS11M&M	NS11M&M	NS11M&M	NS11M&M	NS11M&M	NS11M&M	NS11M&M	NS11M&M	NS11M&M	NS11M&M	NS11M&M	NS11M&M	NS11M&M	NS11M&M	NS11M&M	NS11M&M	NS11M&M
Towers 3&4	Towers 3&4	Towers 3&4	Towers 3&4	Towers 3&4	Towers 3&4	Towers 3&4	Towers 3&4	Towers 3&4	Towers 3&4	Towers 3&4	Towers 3&4	Towers 3&4	Towers 3&4	Towers 3&4	Towers 3&4	Towers 3&4	Towers 3&4	Towers 3&4	Towers 3&4	Towers 3&4	Towers 3&4	Towers 3&4	Towers 3&4
FAVCO M760D Series 2	Tower-Mounted Lattice Boom	East Bathtub Building 4 (South)	[redacted]	3690	5/7/2012 (wire 10.17.12)	Federated Equipment Co.	1165	2006	P384	180'	NA	70 Ton	Filed w/ PANYNJ	3/18/2009	3/4/2009	Tishman Construction Co.	DCM Erectors, Inc.	Frederic Bartz	A-9538	10/31/2014	**Inspected 2/6/12 24th Jump on 2/7/12 to Elevation 1152'**	weathervane @ 66' radius	**N-N/A, S-100, E-140, W-140**
Linkbelt TG 1900	Tower-Mounted Lattice Boom	East Bathtub Building 3(EAST)	[redacted]	3594	5.29.12 check on CD date	Federated Equipment Co.	76G9-742G	1979	P155	180	N/A	115 tons	Filed w/PANYNJ		4.7.11	Tishman Construction Co.	Sobara	Matthew Messinger	B-5469	9/30/2014	**Inspected 2.27.12, elev. 426**	weathervane @ 120' radius	**N-90, S-90, SE 90, E-85, W-180**
Madea MC285C	Mini- crawler crane	East Bathtub Building 4 (East)	[redacted]	4307	3.31.12	Roger's & Sons	P00915	2010	MC285C	28.1	NA	3.1 tons	Filed w/PANYNJ		4.8.11	Tishman Construction Co.	Benson	Roger Manley	A-9270	1/31/2015		retrack boom	**up to 28' varies on location**
Valla 25 E	25E-Electric	T-4	[redacted]	NA	see comments	Valla	9038	2011			N/A	2.25 ton	Filed w/ PANYNJ		5/4/2011	Tishman Constrcution Co.	Benson Industries	Crew		NA	**OSHA Inspection**	N/A	**within floor**
Favco STD-1500	Tower-Mounted Lattice Boom	East Bathtub Building 3 (WEST)	[redacted]	3706	7.20.12 repair 3.13.12	Federated Equipment Co.	410	1975	P-132	157'	N/A	87 tons	Filed w/PANYNJ		6/24/2011	Tishman Construction Co.	Sorbara	Robert Gray	B-5622	10/31/2014	**biweekly inspect. required, Load test passed on 7.19.11**	lock @80' radius	**N, S, W 80', E-150'**
VSC	VSC	VSC	VSC	VSC	VSC	VSC	VSC	VSC	VSC	VSC	VSC	VSC	VSC	VSC	VSC	VSC	VSC	VSC	VSC	VSC	VSC	VSC	VSC
Manitowoc 888 Series 2	Crawler-Mounted Lattice Boom	VSC Elevation 250	[redacted]	3047	1.22.13	Yonkers Contracting Co.	8881176-1999	1999	P-300	180'	N/A	220.5 Ton	Filed w/ PANYNJ		2/9/2011	Yonkers Contracting Co.	NA	Nicholas D'Avanzo (Day) James Piranio (Night)	A-7373 B-5703	10/31/2014 11/30/2014		lay down boom	**N-100, S-60, E-100, W-100**
Manitowoc 16000	Crawler-Mounted Lattice Boom	VSC Elevation 250	[redacted]	4133	8.18.12	New York Cranes	1600-1093	2009	P-516	124	140	127 tons	Filed w/ PANYNJ		10/10/2011	W&W Steel	W&W Steel	Ivor Hall	B-7745	6/30/2012		lower to gr./ evaluate site condition	**Position1 w-80, N 105, S 80, Pos. 3 E-55**
Tandano TR450XL-4	Mobile Crane	North Access Rd	[redacted]	3842	8/22/2012	Bay Crane	540472	2007	P-382	108'	50' (Stowed)	45 Ton	Filed w/ PANYNJ		1/18/2012	Navillus	Navillus	Tranell Francis	A-9364	3/31/2012		retrack boom	
South Vent Building	South Vent Building	South Vent Building	South Vent Building	South Vent Building	South Vent Building	South Vent Building	South Vent Building	South Vent Building	South Vent Building	South Vent Building	South Vent Building	South Vent Building	South Vent Building	South Vent Building	South Vent Building	South Vent Building	South Vent Building	South Vent Building	South Vent Building	South Vent Building	South Vent Building	South Vent Building	South Vent Building
Towers 2	Towers 2	Towers 2	Towers 2	Towers 2	Towers 2	Towers 2	Towers 2	Towers 2	Towers 2	Towers 2	Towers 2	Towers 2	Towers 2	Towers 2	Towers 2	Towers 2	Towers 2	Towers 2	Towers 2	Towers 2	Towers 2	Towers 2	Towers 2
Terex RT335/1	Mobile Crane	Church Street	[redacted]	3976	4/15/2012	New York Crane	15674	2008	P334	94'	49' (Stowed)	35 Ton	Filed w/PANYNJ		1.27.12	Turner	Turner	Idle	Idle	Idle		retrack boom	**N-30, S-40, E-15, W-94**
Linkbelt TG 2300B	Tower-Mounted Lattice Boom	East Bathtub Building 2 (EAST)	[redacted]	4279	5.12.12	Cornell	76G901526B	1979	P249	180	N/A	230 Ton	Filed w/PANYNJ		12/19/2010	Turner	Halmar	Timothy O'Connor	B-9419	6/30/2012	**Inspected 2.10.12**	lock 60 degree, 90'radius	**N-110, S-90, E 180, W-90**
Chiller Plant	Chiller Plant	Chiller Plant	Chiller Plant	Chiller Plant	Chiller Plant	Chiller Plant	Chiller Plant	Chiller Plant	Chiller Plant	Chiller Plant	Chiller Plant	Chiller Plant	Chiller Plant	Chiller Plant	Chiller Plant	Chiller Plant	Chiller Plant	Chiller Plant	Chiller Plant	Chiller Plant	Chiller Plant	Chiller Plant	Chiller Plant

Make and Model	Type	Location	Jurisdiction	NYCDOB CD #	CD Date Expiration	Owner / Vendor	Serial #	Year	Prototype No	Boom Length	Jib	Lift Capacity	NYCDOB CN #	CN # Date of Issuance	Date on Site	Contractor	Sub	Operator	License	License Exp Date	Actions Required or Comments	50 MPH winds	Operating Radius
9A Underpass	9A Underpass	9A Underpass	9A Underpass	9A Underpass	9A Underpass	9A Underpass	9A Underpass	9A Underpass	9A Underpass	9A Underpass	9A Underpass	9A Underpass	9A Underpass	9A Underpass	9A Underpass	9A Underpass	9A Underpass	9A Underpass	9A Underpass	9A Underpass	9A Underpass	9A Underpass	9A Underpass

PANYNJ: Port Authority of New York & New Jersey

PANYNJ (NYS): Port Authority of New York & New Jersey Operating on New York State Property

NYCDOB - C&D: New York City Department of Buildings - Cranes & Derricks Division

PANYNJ-REO: Port Authority of New York & New Jersey - Rsident Engineer's Office

WTC/Hub: World Trade Center transportation Center

NS11M&M: National September 11th Memorial and Museum

N/A: Not Applicable

N/R: Not Required

that will be operated entirely within PANYNJ property lines, and will not involve the moving of any loads on roadways or sidewalks do not require the filing of a CD-4 & CD-8 for a Certificate of On-Site Inspection.

WTC CRANE LOG

DATE: Updated 03/02/2012 **NYCDOB - C&D Jurisdiction Issue** **PANYNJ - REO Jurisdiction Issue**

Make and Model	Type	Location	Jurisdiction	NYCDOB CD #	CD Date Expiration	Owner / Vendor	Serial #	Year	Prototype No	Boom Length	Jib	Lift Capacity	NYCDOB CN #	CN # Date of Issuance	Annual Inspection Date	Date on Site	Date off Site	Contractor	Sub	Operator	License	License Exp Date	Actions Required or Comments
WTC/Hub	WTC/Hub	WTC/Hub	WTC/Hub	WTC/Hub	WTC/Hub	WTC/Hub	WTC/Hub	WTC/Hub	WTC/Hub	WTC/Hub	WTC/Hub	WTC/Hub	WTC/Hub	WTC/Hub	WTC/Hub	WTC/Hub	WTC/Hub	WTC/Hub	WTC/Hub	WTC/Hub	WTC/Hub	WTC/Hub	WTC/Hub
Tadano TR450XL-4	Mobile Crane	East Bathtub On MTA 1/9 Box	PANYNJ			EE Cruz	540396		P-382	108'	N/A	45 Ton	N/R See Note # 1			2/1/2007	8/7/2008	Phoenix	Nicholson / EE Cruz	Menendez	C1-9001	11/30/2008	Removed from WTC Site
Tadano TR450XL-4	Mobile Crane	East Bathtub On MTA 1/9 Box	PANYNJ	3616	11/3/2008	Bay Crane	540398	2005	P-382	108'	50' (Stowed)	45 Ton	N/R See Note # 1			11/1/2007	11/3/2008	Phoenix	Phoenix	Doug Eberthart (Day) Dennis Andrews(Night)	C1-9556 C1-7488	8/31/2011 5/31/09	Removed from WTC Site
Liebherr LR-1200	Crawler-Mounted Lattice Boom	West Bathtub	PANYNJ	Filed with NYCDOB on 8/20/08		Bay Crane	135031	2006	P-468	185'	N/A	270 Ton	Filed w/PANYNJ	9/2/2008	8/30/2008	9/12/2007	11/18/2008	Phoenix	Phoenix	Timothy O'Connor	B-9419	6/30/2009	Removed from WTC Site
Grove YB4409-2	Mobile Crane (Carry Deck)	West Bathtub	PANYNJ	Need NYCDOB Filing		Shawmut Equipment Co	32			38'	12' (Stowed)	9 Ton	N/R See Note # 1			9/20/2007	11/7/2008	Phoenix	Phoenix	Idle	Idle	Idle	Removed from WTC Site
Tandano TR450XL-4	Mobile Crane	West Street Haul road	PANYNJ (NYS)	3187	4/24/2009	Bay Crane	540318	2002	P-383	108'	50' (Stowed)	45 Ton	N/R			4/14/2008	1/13/2009	Phoenix	Phoenix	John Sarnick	C1-9701	6/30/2009	Removed from WTC Site
Tandano TR450XL-4	Mobile Crane	Liberty Street	NYCDOB	3519	12/7/2008	Bay Crane	540370	2005	P-383	108'	50' (Stowed)	45 Ton	N/R			4/18/2008	10/29/2008	Phoenix	Phoenix	Paul Malec	C1-7362	11/30/2008	Removed from WTC Site
Liebherr LTM 1130-5.1	Truck Mounted Telescoping Boom	West Bathtub	PANYNJ	3886	11/9/2008	Bay Crane	65950	2007	P-488	197'	108' (Stowed)	143 Ton				6/30/2008	9/2/2008	Phoenix	Phoenix	Dominic R Milone Mat Hayes(Night 8/21/08)	B-9407 C1-7942	4/30/2009 7/31/09	Crane Transferred to Cornell at NS11M&M on 9/2/08
Tadano TR450XL-4	Mobile Crane	West Bathtub	PANYNJ	3585	6/2/2008	Bay Crane	540389	2005	P-383	108'	50' (Stowed)	45 Ton	N/R See Note # 1			7/11/2008	7/30/2008	Phoenix	Phoenix	Mike Harris	C1- 9042	6/30/2009	Removed from WTC Site
Manitowoc 888 Series 2	Crawler-Mounted Lattice Boom	Vesey Street	NYCDOB	4008	6/29/2009	United Crane Rentals	8881190	1999	P-300	120'	N/A	220 Ton	638-08	8/6/2008		7/13/2008	10/4/2008	Phoenix	Phoenix	Steve Mulson	A-9023	9/30/2008	Moved from Vesey Street to Church Street
Terex RT335/1	Mobile Crane	Church Street	NYCDOB	3975	4/15/2009	New York Crane	15691	2008	P-334	94'	49' (Stowed)	35 Ton				7/16/2008	8/12/2008	Gramercy	Gramercy	Brooks Backof	C1-9581	7/31/2009	Removed from WTC Site
Tadano TR450XL-4	Mobile Crane	West Bathtub	PANYNJ (NYS)	3410	12/2/2008	Bay Crane	540360	2004	P-383	108'	50' (Stowed)	45 Ton	N/R			7/29/2008	8/27/2008	Phoenix	N/A	Mike Harris	C1- 9042	6/30/2009	Removed from WTC Site
Liebherr Werke Ehingen LTM 1250/1	Mobile Crane	West Street Haul Road	PANYNJ (NYS)	3273	10/25/2008	New York Crane	70532	2002	P-414	236'	118' (Stowed)	300 Ton				7/30/2008	8/1/2008	Phoenix	N/A	Graham Dickson	B-9409	5/31/2009	Removed from WTC Site
Liebherr Werke Ehingen LTM 11120/1	Mobile Crane	West Street Haul Road	PANYNJ (NYS)	3145	11/27/2008	Bay Crane	23741	1999	P376	184'	92' (Stowed)	150 Ton				8/4/2008	8/5/2008	Phoenix	N/A	Robert Von See	B-9212	7/31/2008	Removed from WTC Site
Tadano TR450XL-4	Mobile Crane	West Bathtub	PANYNJ	3464	6/9/2009	Bay Crane	540365	2004	P-382	108.3'	50' (Stowed)	45 Ton	N/R			8/4/2008	8/7/2008	Phoenix	N/A	Michael Vergona	C1-9291	8/31/2008	Removed from WTC Site
Tadano TR450XL-4	Mobile Crane	West Bathtub	PANYNJ	3593	8/23/2008	Bay Crane	540390	2005	P-832	108.3'	50' (Stowed)	45 Ton	N/R			8/5/2008	8/6/2008	Phoenix	N/A	James Bruno	A-9359	9/30/2008	Removed from WTC Site
Tadano TR450XL-4	Mobile Crane	Church Street Gate 4	NYCDOB	3135	9/26/2008	Bay Crane	540320	2001	P-382	108.3'	50' (Stowed)	45 Ton				8/7/2008	10/2/2008	Phoenix	Nicholson / EE Cruz	Victor Menendez	C-1 9001	11/30/2008	Removed from WTC Site
KOBELCO CK1000	Hydraulic Mobile Crane	West Street Southbound @ WFC	NYCDOB	3694	8/14/2009	Bay Crane	GH0201036	2005	P-346	80'	N/A	100 Tons	388-08	5/12/2008 Amended 7/8/08		8/11/2008	12/15/2008	Phoenix	Underpinning	Steven White	A-9389	7/31/2009	Removed from WTC Site
Terex RT335/1	Mobile Crane	Church Street	NYCDOB	3975	4/15/2009	New York Crane	15691	2008	P-334	94'	49' (Stowed)	35 Ton				8/19/2008	10/2/2008	Gramercy	Gramercy	Brooks Backof (Day) John Boitis (Swing)	C1-9581 C1- 9647	7/31/2009 8/31/09	Removed from WTC Site
Tadano TR450XL-4	Mobile Crane	North Access Building	PANYNJ (NYS)	3410	12/2/2008	Bay Crane	540360	2004	P-383	108'	50' (Stowed)	45 Ton				8/29/2008	9/18/2008	Phoenix	N/A	Mike Harris	C1- 9042	6/30/2009	Removed from WTC Site
Tadano TR450XL-4	Mobile Crane	West Bathtub	PANYNJ	3585	6/2/2009	Bay Crane	540389	2005	P-383	108'	50' (Stowed)	45 Ton	N/R			8/30/2008	8/30/2008	Phoenix	SMS	Christopher Cosban	B 9215	4/30/2009	Removed from WTC Site
Tadano TR150XL-4	Mobile Crane	West Bathtub	PANYNJ	3898	9/13/2009	Bay Crane	FD806	2005	P459	78'	18' (Stowed)	15 Ton	N/R			8/7/2008	2/25/2009	Phoenix	N/A	Idle	Idle	Idle	Removed from WTC Site

Make and Model	Type	Location	Jurisdiction	NYCDOB CD #	CD Date Expiration	Owner / Vendor	Serial #	Year	Prototype No	Boom Length	Jib	Lift Capacity	NYCDOB CN #	CN # Date of Issuance	Annual Inspection Date	Date on Site	Date off Site	Contractor	Sub	Operator	License	License Exp Date	Actions Required or Comments
Tadano TR450XL-4	Mobile Crane	West Bathtub	PANYNJ	3464	6/9/2009	Bay Crane	540365	2004	P-382	108.3'	50' (Stowed)	45 Ton	N/R			9/5/2008	9/5/2008	Phoenix	N/A	Bob Koermer	9403	12/31/2008	Removed from WTC Site
Tadano TR450XL-4	Mobile Crane	East Bathtub On MTA 1/9 Box	PANYNJ	3464	6/9/2009	Bay Crane	540365	2004	P-382	108.3'	50' (Stowed)	45 Ton	Filed w/ PANYNJ			9/8/2008	9/8/2008	Phoenix	N/A	Steven Glerum	C1-9796	6/30/2009	Removed from WTC Site
Tadano TR450XL-4	Mobile Crane	Liberty Street	NYCDOB	3747	12/21/2008	Bay Crane	540442	2007	P-382	108.3'	50' (Stowed)	45 Ton	N/R			9/8/2008	9/10/2008	Phoenix	N/A	Sean Taylor	C1-9638	5/31/2009	Removed from WTC Site
Tadano TR450XL-4	Mobile Crane	West Bathtub	PANYNJ	3464	6/9/2009	Bay Crane	540365	2004	P-382	108.3'	50' (Stowed)	45 Ton	N/R			9/9/2008	9/12/2008	Phoenix	N/A	Joe Corcoran	C1-9196	12/30/2008	Removed from WTC Site
Liebherr LTM 1220	Truck Mounted Telescoping	West Haul Rd	PANYNJ (NYS)	9/16/1909	3/9/2009	Bay Crane	70225	2005	P449	197'	141' (Stowed)	235	N/R			7/3/1902	9/17/2008	Phoenix	SMS	Robert Bernnardo	B5965	12/31/2008	Removed from WTC Site
Tadano TR450XL-4	Mobile Crane	East Bathtub On MTA 1/9 Box	PANYNJ	3142	11/8/2009	Bay Crane	540311	2001	P-382	108.3'	50' (Stowed)	45 Ton	Filed w/ PANYNJ			9/26/2009	9/26/2008	Phoenix	N/A	B	C1-9892	7/31/2009	Removed from WTC Site
Liebherr LTM 1130-5.1	Truck Mounted Telescoping	West Street Haul Rd	PANYNJ (NYS)	3896	11/9/2008	Bay Crane	65950	2007	P-488	197'	108' (Stowed)	143 Ton				9/27/2008	9/27/2008	Phoenix	SMS	Dominick Milone	B-9407	4/30/2009	Removed from WTC Site
Tadano TR450XL-4	Mobile Crane	West Street Haul Rd	PANYNJ (NYS)	3142	11/8/2009	Bay Crane	540311	2001	P-382	108.3'	50'(Stowed)	45 Ton	N/R			9/30/2008	9/30/2008	Phoenix	N/A	Patrick McKendry	B-5483	3/31/2009	Removed from WTC Site
Tandano TR350XL-3	Mobile Crane	East Bathtub On MTA 1/9 Box	PANYNJ	2817	2/19/2009	Bay Crane	560523	1999	P306	105'	42' (Stower)	30 Ton	Filed w/ PANYNJ			10/1/2008	10/1/2008	Phoenix	NA	Mike Harris	C1- 9042	6/30/2009	Removed from WTC Site
Tandano TR350XL-3	Mobile Crane	West Street Haul Rd	PANYNJ (NYS)	2768	7/15/2009	Bay Crane	560326	1994	P306	93'	42' (Stower)	30 Ton				10/1/2008	10/1/2008	Phoenix	NA	Scott Simons	A- 5793	6/30/2009	Removed from WTC Site
Tadano TR450XL-4	Mobile Crane	Church Street	NYCDOB	3842	8/22/2008	Bay Crane	540472	2007	P-382	108.3'	50'(Stowed)	45 Ton				10/1/2008	10/3/2008	Phoenix	N/A	Joseph Felice	C1-7378	12/31/2008	Removed from WTC Site
Tadano TR450XL-4	Mobile Crane	West Street Haul Rd	PANYNJ (NYS)	3756	1/12/2008	Bay Crane	540444	2007	P-382	108.3'	50'(Stowed)	45 Ton				10/2/2008	10/3/2008	Phoenix	N/A	Scott Simons	A- 5793	6/30/2009	Removed from WTC Site
Tadano TR450XL-4	Mobile Crane	Church Street	NYCDOB	3631	1/10/2009	Bay Crane	540403	2005	P-382	108.3'	50'(Stowed)	45 Ton				10/3/2008	12/8/2008	Phoenix	Nicholson / EE Cruz	Idle	Idle	Idle	Removed from WTC Site
Tadano TR450XL-4	Mobile Crane	Vesey Street	NYCDOB	3626	12/22/2008	Bay Crane	540399	2005	P-382	108.3'	50'(Stowed)	45 Ton				10/3/2008	10/9/2008	Phoenix	NA	Mike Harris	C1- 9042	6/30/2009	Removed from WTC Site
Manitowoc 888 Series 2	Crawler-Mounted Lattice Boom	Chruch Street	NYCDOB	4008	6/29/2009	United Crane Rentals	8881180	1999	P-300	120'	N/A	220 Ton	791-08	10/2/2008		10/4/2008	3/14/2009	Phoenix	Phoenix	Idle	Idle	Idle	Removed from WTC Site
Tadano TR450XL-4	Mobile Crane	West Street Haul Rd	PANYNJ (NYS)	3842	8/22/2008	Bay Crane	540472	2007	P-382	108.3'	50' (Stowed)	45 Ton				10/10/2008	10/14/2008	Phoenix	N/A	Joseph Felice	C1-7378	12/31/2008	Removed from WTC Site
Liebherr LTM 1250.1	Truck Mounted Telescoping	West Street Haul Rd	PANYNJ (NYS)	3555	4/4/2009	Bay Crane	70847	2005	P414	236'	118' (Stowed)	300 Ton				10/11/2008	10/11/2008	Phoenix	SMS	Keith Williams	B-9284	12/31/2008	Removed from WTC Site
Tadano TR450XL-4	Mobile Crane	West Street Haul Rd	PANYNJ (NYS)	3142	11/8/2009	Bay Crane	540311	2001	P-382	108.3'	50' (Stowed)	45 Ton				10/17/2008	10/21/2008	Phoenix	SMS	Joseph Mainien	B-5517	2/28/2009	Removed from WTC Site
Terex RT335/1	Mobile Crane	Church Street	NYCDOB	4037	8/22/2009	New York Crane	16107	2008	P-334	94'	49' (Stowed)	35 Ton	Need NYCDOB Filing			10/23/2008	11/22/2008	Gramercy	NA	Eric Williams	C1-9623	1/3/2009	Removed from WTC Site
Tadano TR450XL-4	Mobile Crane	West Bathtub	PANYNJ	3142	11/8/2009	Bay Crane	540311	2001	P-382	108.3'	50' (Stowed)	45 Ton	N/R			10/17/2008	11/7/2008	Phoenix	Phoenix	John Deque	C1-7227	9/30/2011	Removed from WTC Site
Liebherr LTM 1400	Truck Mounted Telescoping	West Bathtub	PANYNJ	2803	1/5/2009	Bay Crane	114601	1998	P-311	269'	NA	480 Ton	Filed w/ PANYNJ	10/31/2008		10/28/2008	11/3/2008	Phoenix	SMS	Charles Noeth	B-7820	8/31/2011	Removed from WTC Site
Liebheer LTM1220	Truck Mounted Telescoping	West Street Haul Rd	PANYNJ (NYS)	3547	3/9/2009	Bay Crane	70225	2005	P-449	197'	141' (Stowed)	235 Ton				11/3/2008	11/3/2008	Phoenix	SMS	Richard Vergona	B-9213	7/3/09	Removed from WTC Site
Tadano TR450XL-4	Mobile Crane	Vesey Street	PANYNJ	3919	12/20/2011	Skanska	540481	2007	P-382	108'	50' (Stowed)	45 Ton	N/R			11/7/2008	7/25/2011	Skanska Granite	Skanska Granite	Joe Marchiano	C1-8016	11/30/2011	Removed fromWTC Site
Liebherr LTM 1400	Truck Mounted Telescoping	West Bathtub	PANYNJ	2803	1/5/2009	Bay Crane	114601	1998	P-311	269'	NA	480 Ton	Filed w/ PANYNJ	10/31/2008		11/8/2008	11/9/2008	Phoenix	SMS	Charles Noeth	B-7820	8/31/2011	Removed from WTC Site

Make and Model	Type	Location	Jurisdiction	NYCDOB CD #	CD Date Expiration	Owner / Vendor	Serial #	Year	Prototype No	Boom Length	Jib	Lift Capacity	NYCDOB CN #	CN # Date of Issuance	Annual Inspection Date	Date on Site	Date off Site	Contractor	Sub	Operator	License	License Exp Date	Actions Required or Comments
Tandano TR450XL-4	Mobile Crane	West Bathtub	PANYNJ	3519	12/7/2008	Bay Crane	540370	2005	P-383	108'	50' (Stowed)	45 Ton	N/R			11/10/2008	11/10/2008	Phoenix	Phoenix	Paul Malec	C1-7362	11/30/2008	Removed from WTC Site
Tandano TR450XL-4	Mobile Crane	West Bathtub	PANYNJ	3611	10/17/2009	Bay Crane	540393	2005	P-382	108'	50' (Stowed)	45 Ton	N/R			11/10/2008	11/11/2008	Phoenix	Phoenix	John Sarnick	C1-9701	6/30/2009	Removed from WTC Site
Tandano TR450XL-4	Mobile Crane	West Street Haul Rd	PANYNJ	3885	8/2/2009	Bay Crane	540389	2008	P-383	108'	60' (Stowed)	45 Ton	N/R			11/10/2008	3/30/2009	Phoenix	Phoenix	Mike Tortora	C1-9033	5/31/2009	Removed from WTC Site
Tandano TR450XL-4	Mobile Crane	Church Steet	NYCDOB	3566	5/6/2009	Bay Crane	540386	2005	P-382	108'	50' (Stowed)	45 Ton				11/21/2008	11/28/2008	Phoenix	Underpinning	Charles Noeth	C1-9782	5/31/2009	Removed from WTC Site
Dematic AC 40-1	Mobile Crane	East Bathtub On MTA 1/9 Box	PANYNJ	3358	6/9/2009	Bay Crane	70502	2003	P360	102'	28' (IN USE)	40 ton	Filed w/ PANYNJ			12/4/2008	12/6/2008	Phoenix	SMS	Selton Herbert	A 9238	2009-04-30	Removed from WTC Site
Tandano TR450XL-4	Mobile Crane	Church Street	NYCDOB	3611	10/17/2009	Bay Crane	540393	2005	P-382	108'	50' (Stowed)	45 Ton	N/R			12/2/2008	12/24/2008	Phoenix	Phoenix	John Bauer	C1-9256	6/30/2009	Removed From WTC Site
Tandano TR450XL-4	Mobile Crane	West Street (Zone5)	PANYNJ (NYS)	3920	12/20/2010	Skanska	540482	2007	P-382	108'	50' (Stowed)	45 Ton	Filed w/ PANYNJ	6/6/2008		12/4/2008	2/22/2010	Phoenix	Phoenix	Idle	Idle	Idle	Removed from WTC Site
Dematic AC 40-1	Mobile Crane	East Bathtub On MTA 1/9 Box	PANYNJ	3358	6/9/2009	Bay Crane	70502	2003	P360	102'	28' (IN USE)	40 ton	Filed w/ PANYNJ			12/9/2008	12/9/2008	Phoenix	SMS	Selton Herbert	A 9238	2009-04-30	Removed from WTC Site
Dematic AC 40-1	Mobile Crane	East Bathtub On MTA 1/9 Box	PANYNJ	3358	6/9/2009	Bay Crane	70502	2003	P360	102'	28' (IN USE)	40 ton	Filed w/ PANYNJ			12/18/2008	12/18/2008	Phoenix	SMS	Eric Weinmiller	A-9377	3/31/2009	Removed from WTC Site
Dematic AC 40-1	Mobile Crane	East Bathtub On MTA 1/9 Box	PANYNJ	3358	6/9/2009	Bay Crane	70502	2003	P360	102'	28' (IN USE)	40 ton	Filed w/ PANYNJ			12/26/2008	1/3/2009	Phoenix	SMS	Joseph Felice	C1-7378	12/31/2011	Removed from WTC Site
Tandano TR450XL-4	Mobile Crane	East Bathtub On MTA 1/9 Box	PANYNJ	3842	8/22/2009	Bay Crane	540472	2007	P-382	108'	50' (IN USE)	45 Ton	Filed w/ PANYNJ			1/9/2009	1/13/2009	Phoenix	SMS	Joseph Felice	C1-7378	12/31/2011	Removed from WTC Site
Liebheer LTM1090-2	Hydraulic Truck Mounted	Church Street	NYCDOB	3674	7/6/2009	Bay Crane	61839	2006	P462	164'	62' (Stowed)	110 Ton	Master Rigger			1/17/2009	1/17/2009	Phoenix	Phoenix	Owen James	B-6714	8/31/2011	Removed from WTC Site
Tadano TR450XL-4	Mobile Crane	Church Street	NYCDOB	3842	8/22/2009	Bay Crane	540472	2007	P-382	108.3'	50' (Stowed)	45 Ton	Master Rigger			1/17/2009	1/17/2009	Phoenix	Phoenix	Joseph Felice	C1-7378	12/31/2011	Removed from WTC Site
Tandano TR450XL-4	Mobile Crane	Vesey Street	NYCDOB	3391	9/25/2009	Bay Crane	540355	2003	P-382	108'	50' (Stowed)	45 Ton	N/R			1/21/2009	1/21/2009	Phoenix	Phoenix	Kenneth Kurdis	C1-9034	5/31/2009	Removed from WTC Site
Tandano TR450XL-4	Mobile Crane	Liberty Street	NYCDOB	3842	8/22/2009	Bay Crane	540472	2007	P-382	108'	50' (IN USE)	45 Ton	N/R			1/21/2009	1/21/2009	Phoenix	Phoenix	William Larkin	C1-7153	11/30/2011	Removed from WTC Site
Tandano TR450XL-4	Mobile Crane	West Street Haul Rd	PANYNJ (NYS)	3611	10/17/2009	Bay Crane	540393	2005	P-382	108'	50' (Stowed)	45 Ton	N/R			1/22/2009	1/22/2009	Phoenix	Phoenix	Christopher Brett	A-9237	4/30/2009	Removed From WTC Site
Liebheer LTM 1120/1	Hydraulic Truck Mounted	Vesey Street	NYCDOB	3145	11/27/2009	Bay Crane	23741	1999	P376	184'	92' (Stowed)	150 Ton	981-08	1/22/2009		1/22/2009	1/27/2009	Phoenix	SMS	Roy Petrullo	B-5726	3/31/2009	Removed from WTC Site
Tandano TR450XL-4	Mobile Crane	West Street Haul Rd	PANYNJ	3187	4/24/2009	Bay Crane	540316	2002	P-383	108'	50' (Stowed)	45 Ton	864-08	10/2/2008		1/27/2009	4/28/2009	Phoenix	Phoenix	Kenneth Kurdis	C1-9034	5/31/2009	Removed from WTC Site
Tandano TR450XL-4	Mobile Crane	West Street Haul Rd	PANYNJ (NYS)	3391	9/25/2009	Bay Crane	540355	2003	P-382	108'	50' (Stowed)	45 Ton	N/R			1/26/2009	1/28/2009	Phoenix	SMS	Peter Engel	C1-9874	3/31/2009	Removed from WTC Site
Tandano TR450XL-4	Mobile Crane	East Bathtub On MTA 1/9 Box	PANYNJ	3755	1/12/2010	Bay Crane	540443	2007	P-383	108'	50' (IN USE)	45 Ton	Filed w/ PANYNJ			2/9/2009	2/17/2009	Phoenix	SMS	Idle	Idle	Idle	Removed from WTC Site

Make and Model	Type	Location	Jurisdiction	NYCDOB CD #	CD Date Expiration	Owner / Vendor	Serial #	Year	Prototype No	Boom Length	Jib	Lift Capacity	NYCDOB CN #	CN # Date of Issuance	Annual Inspection Date	Date on Site	Date off Site	Contractor	Sub	Operator	License	License Exp Date	Actions Required or Comments
Liebheer LTM 1130-5.1	Hydraulic Truck Mounted	Vesey Street	NYCDOB	3898	11/9/2009	Bay Crane	65950	2007	P488	197'	108' (Stowed)	143 Ton	981-08	1/22/2009		2/12/2009	2/12/2009	Phoenix	Phoenix	Dominick Milone	B-9407	4/30/2009	Removed from WTC Site
Liebheer LTM 1130-5.1	Hydraulic Truck Mounted	Vesey Street	NYCDOB	3926	1/2/2010	Bay Crane	65970	2007	P488	197'	108' (Stowed)	143 Ton	981-08	1/22/2009		2/22/2009	2/22/2009	Phoenix	SMS	Dominick Milone	B-9407	4/30/2009	Removed from WTC Site
Tandano TR450XL-4	Mobile Crane	West Street Zone 3	NYCDOB	3568	5/6/2009	Bay Crane	540386	2005	P-382	108'	50' (Stowed)	45 Ton	Filed w/ PANYNJ			2/27/2009	2/27/2009	Phoenix	Phoenix	Joe Corcoram	C1-9196	12/31/2011	Removed from WTC Site
Tadano TR450XL-4	Mobile Crane	West Street Zone 3	PANYNJ	3142	11/8/2009	Bay Crane	540311	2001	P-382	108.3'	50' (Stowed)	45 Ton	Filed w/ PANYNJ			2/27/2009	2/27/2009	Phoenix	Phoenix	Christopher Blake	C1-9791	6/30/2009	Removed from WTC Site
Tadano TR450XL-4	Mobile Crane	West Street Zone 3	PANYNJ (NYS)	3756	1/12/2008	Bay Crane	540444	2007	P-382	108.3'	50' (Stowed)	45 Ton	Filed w/ PANYNJ			2/28/2009	2/28/2009	Phoenix	Phoenix	Christopher Blake	C1-9791	6/30/2009	Removed from WTC Site
Tadano TR450XL-4	Mobile Crane	West Street Zone 3	PANYNJ (NYS)	3069	3/12/2009	Bay Crane	540306	2001	P-382	108.3'	50' (Stowed)	45 Ton	Filed w/ PANYNJ			2/28/2009	3/6/2009	Phoenix	Phoenix	Joe Corcoram	C1-9196	12/31/2011	Removed from WTC Site
Demag AC 40-1	Mobile Crane	East Bathtub On MTA 1/9 Box	PANYNJ	3977	4/16/2009	Bay Crane	15018	2008	P498	131.5'	86.3' (Stowed)	65 Ton	Filed w/ PANYNJ			2/28/2009	2/28/2009	Phoenix	Phoenix	Rich Vergona	B-9213	7/31/2009	Removed from WTC Site
Liebheer LTM 1130-5.1	Hydraulic Truck Mounted	Vesey Street	NYCDOB	3926	1/2/2010	Bay Crane	65970	2007	P488	197'	108' (Stowed)	143 Ton	981-08	1/22/2009		3/5/2009	3/10/2009	Phoenix	Phoenix	Mark Filon	B-5738	4/30/2009	Removed from WTC Site
Tandano TR450XL-4	Mobile Crane	East Bathtub On MTA 1/9 Box	PANYNJ	4073	11/21/2009	Bay Crane	540565	2009	P-382	108'	50' (Stowed)	45 Ton	Filed w/ PANYNJ			3/7/2009	3/11/2009	Phoenix	Phoenix	Joseph Felice	C1-7378	12/31/2011	Removed from WTC Site
Liebherr LTM 1220	Truck Mounted Telescoping Boom	Church Steet	NYCDOB	3/9/1911	12/29/2009	Bay Crane	70465	2009	P449	197'	141' (Stowed)	235 Ton				3/14/2009	3/14/2009	Phoenix	Phoenix	Robert Bernardo	B5965	12/31/2008	Removed from WTC Site
Tandano TR450XL-4	Mobile Crane	Liberty Street	PANYNJ	3391	9/26/2009	Bay Crane	540355	2003	P-382	108'	50' (Stowed)	45 Ton	Filed w/ PANYNJ			3/16/2009	3/21/2009	Phoenix	Phoenix	Joseph Ruggero	C1- 6626	4/30/2009	Removed from WTC Site
Tandano TR450XL-4	Mobile Crane	East Bathtub On MTA 1/9 Box	PANYNJ	3566	5/6/2009	Bay Crane	540386	2005	P-382	108'	50' (Stowed)	45 Ton	Filed w/ PANYNJ			3/20/2009	3/20/2009	Phoenix	SMS	Michael Frobin	A-7999	11/30/2011	Removed from WTC Site
Tandano TR450XL-4	Mobile Crane	Liberty Street	PANYNJ	3518	12/7/2009	Bay Crane	540371	2005	P-382	108'	50' (Stowed)	45 Ton	N/R			3/21/2009	3/30/2009	Phoenix	Phoenix	Joseph Ruggero	C1-6626	4/30/2009	Removed from WTC Site
Liebheer LTM 1130-5.1	Hydraulic Truck Mounted	Vesey Street	NYCDOB	3926	1/2/2010	Bay Crane	65970	2007	P488	197'	108' (Stowed)	143 Ton	981-08	1/22/2009		3/31/2009	3/31/2009	Phoenix	Phoenix	Christopher Cosban	B 9215	4/30/2009	Removed from WTC Site
Tandano TR450XL-4	Mobile Crane	Liberty Street	PANYNJ	3518	12/7/2009	Bay Crane	540371	2005	P-382	108'	50' (Stowed)	45 Ton	N/R			4/3/2009	4/4/2009	Phoenix	Phoenix	Mike Tortora	C1-9833	5/31/2009	Removed from WTC Site
Tandano TR450XL-4	Mobile Crane	West Street Haul Rd	PANYNJ	3518	12/7/2009	Bay Crane	540371	2005	P-382	108'	50' (Stowed)	45 Ton	N/R			4/6/2009	6/6/2009	Phoenix	Phoenix	Thomas Willimson	C1-9152	6/30/2009	Removed from WTC Site
Tadano TR450XL-4	Mobile Crane	West Street Zone 3	PANYNJ (NYS)	3142	11/8/2009	Bay Crane	540311	2001	P-382	108.3'	50' (Stowed)	45 Ton	NR			4/7/2009	4/7/2009	Phoenix	Underpinning	Jonathan Zommer	C1-9940	2/28/2012	Removed from WTC Site
Liebheer LTM 1250/1	Hydraulic Truck Mounted	Church Street	PANYNJ	3292	1/7/2010	Cranes Inc	70549	2003	P414	236'	138' (Stowed)	300 Ton	Filed w/ PANYNJ	4/14/2009		4/15/2009	4/15/2009	Phoenix	Phoenix	John Hales	B-2863	3/31/2012	Removed from WTC Site

Make and Model	Type	Location	Jurisdiction	NYCDOB CD #	CD Date Expiration	Owner / Vendor	Serial #	Year	Prototype No	Boom Length	Jib	Lift Capacity	NYCDOB CN #	CN # Date of Issuance	Annual Inspection Date	Date on Site	Date off Site	Contractor	Sub	Operator	License	License Exp Date	Actions Required or Comments
Liebheer HS-885-HD	Crawler-Mounted Lattice Boom	Church Street	PANYNJ	4110	3/12/2010	Cranes Inc	187333	2006	P444	95'	NA	115 Ton	Filed w/ PANYNJ	9/29/2009		4/15/2009	11/27/2009	Tutor/Perini	Tutor/Perini	Timothy O'Connor(Day) Philip McPaul(Night)	B-4919 A-9226	6/30/2012 4/30/2012	Removed from WTC Site
Tadano TR150XL-4	Mobile Crane	Church Street	PANYNJ	4059	see comment 12.7.10	EE Cruz & Co	FD1638	2008	P459	78'	18' (Stowed)	15 Ton	N/R			4/20/2009	4/12/2010	Tutor/Perini	Nicholson / EE Cruz	Mrquiades Velez	C1-9864	1/31/2012	Removed from WTC Site
Tandano TR450XL-4	Mobile Crane	West Street Zone 3	PANYNJ (NYS)	3390	9/25/2009	Bay Crane	540354	2003	P-382	108'	50' (Stowed)	45 Ton	N/R			4/28/2009	7/6/2009	Phoenix	Phoenix	Kenneth Kurdis	C1-9034	5/31/2012	Removed from WTC Site
Linkbelt HC218	Truck Mounted Lattice Boom	West Street Zone 3	PANYNJ (NYS)	1063		Bay Crane	18HA261	1970	OLINKB03	85'	NA	82 Ton	NR			6/4/2009	6/12/2009	Phoenix	Phoenix	Thomas E Famula	A-9788	6/30/2009	Removed from WTC Site
Tandano TR450XL-4	Mobile Crane	Vesey Street	PANYNJ (NYS)	3475	7/19/2009	Bay Crane	540366	2004	P-382	108'	50' (Stowed)	45 Ton	N/R			6/11/2009	6/11/2009	Phoenix	Phoenix	James Paledino	C1-9583	7/31/2011	Removed from WTC Site
Demag AC55	Mobile Crane	East Bathtub On MTA 1/9 Box	PANYNJ	3997	4/23/2009	Bay Crane	15085	2008	P498	131.2'	66.3' (Stowed)	65 Ton	Filed w/ PANYNJ	6/10/2009		6/13/2009	6/13/2009	Phoenix	Phoenix	Joseph J Fodera	A-7645	12/31/2011	Removed from WTC Site
Tadano TR450XL-4 Green	Mobile Crane	East Bathtub On MTA 1/9 Box	PANYNJ	3912	12/5/2009	EE Cruz & Co	540395	2005	P-382	106'	NA	45 Ton	Filed w/ PANYNJ	6/12/2009		6/15/2009	8/5/2009	Nicholson / EE Cruz	NA	Paul Gay	C1-6808	3/31/2012	Removed from WTC Site
Tadano TR450XL-4	Mobile Crane	West Street Zone 3	PANYNJ	3566	5/6/2010	Bay Crane	540386	2005	P-382	106'	50' (Stowed)	45 Ton	NR			6/22/2009	6/23/2009	Phoenix	NA	John Cosentino	A-5729	3/31/2012	Removed from WTC Site
Liebherr LTM 1220	Hydraulic Truck Mounted	West Street Haul Rd	PANYNJ	4086	12/29/2009	Bay Crane	70465	2009	P449	197'	141' (Stowed)	235	Filed w/ PANYNJ	6/26/2009		6/25/2009	6/30/2009	Phoenix	Phoenix	Richard Vergona	B-9213	7/31/2009	Removed from WTC Site
Liebheer LTM 1130-5.1	Hydraulic Truck Mounted	Vesey Street	NYCDOB	3908	11/30/2009	Bay Crane	65961	2007	P488	197'	108' (Stowed)	143 Ton	494-09	6/25/2009		6/26/2009	6/26/2009	Nicholson / EE Cruz	NA	Owen James	B 6714	8/31/2011	Removed from WTC Site
Liebheer LTM 1120	Hydraulic Truck Mounted	Liberty Street	PANYNJ	3332	4/10/2010	Bay Crane	67024	2000	P376	184'	92' (Stowed)	150 Ton	Filed w/ PANYNJ			7/1/2009	7/9/2009	Phoenix	SMS	Charles Noeth	B-7820	8/31/2011	Removed from WTC Site
Tadano TR450XL-4	Mobile Crane	Liberty Street	PANYNJ	3593	8/23/2009	Bay Crane	540390	2005	P-382	108'	50' (Stowed)	45 Ton	NR			7/6/2009	7/9/2009	Phoenix	SMS	Charles Noeth	B-7820	8/31/2011	Removed from WTC Site
Tadano TR450XL-4	Mobile Crane	Liberty Street	PANYNJ	3593	8/23/2009	Bay Crane	540390	2005	P-382	108'	50' (Stowed)	45 Ton	NR			7/6/2009	7/9/2009	Phoenix	SMS	Charles Noeth	B-7820	8/31/2011	Removed from WTC Site
Liebheer LTM 1130-5.1	Hydraulic Truck Mounted	Vesey Street	NYCDOB	3926	1/2/2010	Bay Crane	65970	2007	P488	197'	108' (Stowed)	143 Ton	494-09	6/25/2009		7/9/2009	7/9/2009	Nicholson / EE Cruz	NA	Mark Filon	B-5738	4/30/0212	Removed from WTC Site
Liebheer LTM 1120	Hydraulic Truck Mounted	West Street Haul Rd	PANYNJ	3332	4/10/2010	Bay Crane	67024	2000	P376	184'	92' (Stowed)	150 Ton	Filed w/ PANYNJ	7/10/2009		7/10/2009	7/11/2009	Phoenix	SMS	Charles Noeth	B-7820	8/31/2011	Removed from WTC Site
Tandano TR450XL-4	Mobile Crane	East Bathtub On MTA 1/9 Box	PANYNJ	4073	11/21/2009	Bay Crane	540565	2009	P-382	108'	50' (Stowed)	45 Ton	Filed w/ PANYNJ			7/17/2009	7/17/2009	Phoenix	SMS	Joseph Felice	C-7378	12/31/2011	Removed from WTC Site

Make and Model	Type	Location	Jurisdiction	NYCDOB CD #	CD Date Expiration	Owner / Vendor	Serial #	Year	Prototype No	Boom Length	Jib	Lift Capacity	NYCDOB CN #	CN # Date of Issuance	Annual Inspection Date	Date on Site	Date off Site	Contractor	Sub	Operator	License	License Exp Date	Actions Required or Comments
Liebheer LTM 1130-5.1	Hydraulic Truck Mounted	Liberty Street	PANYNJ	3926	1/2/2010	Bay Crane	65970	2007	P488	197'	108' (Stowed)	143 Ton	Filed w/ PANYNJ	7/22/2009		7/22/2009	7/24/2009	Phoenix	SMS	Mark Filon	B-5738	4/30/0212	Removed from WTC Site
Liebheer LTM 1130-5.1	Hydraulic Truck Mounted	Vesey Street	NYCDOB	3908	11/30/2009	Bay Crane	65961	2007	P488	197'	108' (Stowed)	143 Ton	494-09	6/25/2009		7/24/2009	7/24/2009	Nicholson / EE Cruz	NA	Charlie Noeth	B-7820	8/31/2011	Removed from WTC Site
Tandano TR450XL-4	Mobile Crane	Liberty Street	PANYNJ	4073	11/21/2009	Bay Crane	540565	2009	P-382	108'	50' (Stowed)	45 Ton	Filed w/ PANYNJ			7/30/2009	8/2/2009	Phoenix	SMS	Joseph Felice	C-7378	12/31/2011	Removed from WTC Site
Liebheer LTM 1130-5.1	Hydraulic Truck Mounted	Vesey Street	NYCDOB	3926	1/2/2010	Bay Crane	65970	2007	P488	197'	108' (Stowed)	143 Ton	494-09	6/25/2009		7/31/2009	8/3/2009	Nicholson / EE Cruz	NA	Robert Bernardo	B-5965	12/31/2011	Removed from WTC Site
Liebheer 1120	Hydraulic Truck Mounted	West Street West Haul RD	NYCDOB	3145	11/22/2009	Bay Crane	23741	1999	P376	184	92	150 Ton	Filed w/ PANYNJ			8/6/2009	8/6/2009	Phoenix	N/A	Charlie Noeth	B-7820	8/31/2011	Removed from WTC Site
Tandano TR450XL-4	Mobile Crane	East Bathtub On MTA 1/9 Box	PANYNJ	4073	11/21/2009	Bay Crane	540565	2009	P-382	108'	50' (Stowed)	45 Ton	Filed w/ PANYNJ			8/11/2009	8/24/2009	Phoenix	SMS	Joseph Felice	C-7378	12/31/2011	Removed from WTC Site
Tandano TR450XL-4	Mobile Crane	East Bathtub On MTA 1/9 Box	PANYNJ	3518	12/7/2009	Bay Crane	540317	2005	P-382	108'	50' (Stowed)	45 Ton	Filed w/ PANYNJ			8/14/2009	8/14/2009	J H Reid		William Larkin	C1-7153	11/30/2011	Removed from WTC Site
Tandano TR450XL-4	Mobile Crane	East West Connector (Elev 300)	PANYNJ	3518	12/7/2009	Bay Crane	540371	2005	P-382	108'	50' (Stowed)	45 Ton	Filed w/ PANYNJ			8/18/2009	12/7/2009	J H Reid	J H Reid	John Samuel	B-5608	3/8/2011	Removed from WTC Site
Liebherr LTM 1120/1	Hydraulic Truck Mounted	West Street Haul Rd	PANYNJ	3148	11/27/2009	Bay Crane	23741	1999	P-376	184'	92' (Stowed)	150	Filed w/ PANYNJ			8/20/2009	8/20/2009	Phoenix	NA	Dumbrock Milone	B-9407	4/30/2012	Removed from WTC Site
Grove AP-308	Mobile Crane (Carry Deck)	East West Connector (Elev 266)	PANYNJ	2550	8/16/2010	Bay Crane	73787	1990	P225	24'	15.7' (Stowed)	8.5 Ton	Filed w/ PANYNJ			8/20/2009	10/18/1902	Phoenix	Phoenix	Idle	Idle	Idle	Removed from WTC Site
Tandano TR450XL-4	Mobile Crane	East Bathtub On MTA 1/9 Box	PANYNJ	3298	1/22/2010	Bay Crane	540332	2002	P-382	108'	50' (Stowed)	45 Ton	Filed w/ PANYNJ			8/21/2009	1.20.10	J H Reid	J H Reid	Brain Dwyer	A-9676	2/28/2012	Removed from WTC Site
Liebheer LTM 1220	Hydraulic Truck Mounted	Liberty Street	PANYNJ	4086	12/20/2009	Bay Crane	70465	2009	P449	197'	141' (Stowed)	235 Ton	Filed w/ PANYNJ	8/24/2009		8/24/2009	9/2/2009	Phoenix	SMS	Richard Vergona	B-9213	7/31/2012	Removed from WTC Site
Tandano TR450XL-4	Mobile Crane	East Bathtub On MTA 1/9 Box	PANYNJ	3299	1/22/2010	Bay Crane	540322	2002	P-382	108'	50' (Stowed)	45 Ton	Filed w/ PANYNJ			9/3/2009	9/3/2009	Phoenix	SMS	Duncan Davidson	C1-7405	3/31/2012	Removed from WTC Site
Liebheer LTM 1250/1	Hydraulic Truck Mounted	West Street Haul Rd	PANYNJ	3555	4/4/2010	Bay Crane	70647	2005	P414	236	118' (Stowed)	300 Ton	Filed w/ PANYNJ			9/8/2009	9/9/2009	Phoenix	SMS	Todd Hoyle	B-80843	3/31/2012	Removed from WTC Site
Tandano TR450XL-4	Mobile Crane	Liberty Street	PANYNJ	4073	11/21/2009	Bay Crane	540565	2009	P-382	108'	50' (Stowed)	45 Ton	Filed w/ PANYNJ			9/14/2009	9/14/2009	Phoenix	SMS	Michael Frobin	C1-7999	11/30/2011	Removed from WTC Site
Liebheer LTM 1220	Hydraulic Truck Mounted	Liberty Street	PANYNJ	4086	12/20/2009	Bay Crane	70465	2009	P449	128	na	235 Ton	Filed w/ PANYNJ			9/15/2009	9/23/2009	Phoenix	SMS	Richard Vergona	B-9213	7/31/2012	Removed from WTC Site
Tadano TR450XL-4	Mobile Crane	Liberty Street	PANYNJ	3410	12/12/2009	Bay Crane	540360	2004	P-383	108'	50' (Stowed)	45 Ton	Filed w/ PANYNJ			9/24/2009	9/25/2009	Phoenix	SMS	Robert Taylor	B-5293	7/31/2012	Removed from WTC Site
Tadano TR450XL-4	Mobile Crane	East Bathtub On MTA 1/9 Box	PANYNJ	3328	3/19/2010	Bay Crane	540334	2003	P-383	108'	50' (Stowed)	45 Ton	Filed w/ PANYNJ			9/25/2009	9/25/2009	Phoenix	Phoenix	Robert Bernardo	B-5965	12/31/2011	Removed from WTC Site
Tandano TR450XL-4	Mobile Crane	Liberty Street	PANYNJ	3842	8/22/2010	Bay Crane	540481	2007	P-382	108'	50' (Stowed)	45 Ton	Filed w/ PANYNJ			9/30/2009	10/8/2009	Phoenix	SMS	Joe Capo	A-9449	2/28/2010	Removed from WTC Site
Tandano TR450XL-4	Mobile Crane	East Bathtub On MTA 1/9 Box	PANYNJ	3391	9/25/2009	Bay Crane	540355	2003	P-382	108'	50' (Stowed)	45 Ton	Filed w/ PANYNJ			10/8/2009	11/19/2009	Tutor/Perini	Tutor/Perini	Gerwyn R Williams(Day) Lawrence Mysiuk(Night)	C1-8017 C1-7189	11/30/2011 5/31/2012	Removed from WTC Site
Demag AC5	Mobile Crane	Liberty Street Bridge	PANYNJ	3977	4/16/2010	Bay Crane	15018	2008	P-498	131.5'	88.3' (Stowed)	65 Ton	Filed w/ PANYNJ			10/10/2009	10/10/2009	Phoenix	SMS	Todd Hoyle	B-8684	3/31/2012	Removed from WTC Site

Make and Model	Type	Location	Jurisdiction	NYCDOB CD #	CD Date Expiration	Owner / Vendor	Serial #	Year	Prototype No	Boom Length	Jib	Lift Capacity	NYCDOB CN #	CN # Date of Issuance	Annual Inspection Date	Date on Site	Date off Site	Contractor	Sub	Operator	License	License Exp Date	Actions Required or Comments
Tandano TR450XL-4	Mobile Crane	Liberty Street	PANYNJ	4073	11/21/2009	Bay Crane	540565	2009	P-382	108'	50' (Stowed)	45 Ton	Filed w/ PANYNJ			10/19/2009	10/21/2009	Phoenix	SMS	Michael Frobin	CI-7999	11/30/2011	Removed from WTC Site
Liebherr LTM 1220	Truck Mounted Telescoping Boom	West Side Haul Rd	PANYNJ	3546	3/9/2010	Bay Crane	70224	2005	P-449	197'	141' (Stowed)	235 Ton	Filed w/ PANYNJ	10/19/2009		10/19/2009	10/30/2009	Phoenix	Phoenix	Mark Jones	A-9328	9/30/2011	Removed from WTC Site
Liebherr 1130-5.1	Truck Mounted Telescoping Boom	Liberty Street Bridge	PANYNJ	3926	1/2/2010	Bay Crane	65970	2007	P-448	197'	108' (Stowed)	143 Ton	Filed w/ PANYNJ	10/23/2009		10/23/2009	10/28/2009	Phoenix	SMS	Mark Filon	B-5738	4/30/2012	Removed from WTC Site
Liebheer 1090-4.1	Truck Mounted Telescoping Boom	Liberty Street Bridge	PANYNJ	3663	5/30/2010	Bay Crane	61831	2006	P-462	164'	62' (Stowed)	110 Ton	Filed w/ PANYNJ	10/28/2009		10/28/2009	10/29/2009	Phoenix	Phoenix	James Bartell	B- 5771	9/30/2011	Removed from WTC Site
Liebherr 1130-5.1	Truck Mounted Telescoping Boom	Liberty Street Bridge	PANYNJ	3908	11/30/2009	Bay Crane	65961	2007	P-448	197'	108' (Stowed)	143 Ton	Filed w/ PANYNJ	10/23/2009		10/30/2009	11/1/2009	Phoenix	SMS	James Bartell	B- 5771	9/30/2011	Removed from WTC Site
Tandano TR450XL-4	Mobile Crane	East Bathtub On MTA 1/9 Box	PANYNJ	3410	12/12/2010	Bay Crane	540360	2004	P-382	108'	50' (Stowed)	45 Ton	Filed w/ PANYNJ			1104/09	12.4.09	J H Reid	J H Reid	Joe Cappo	A-9449	2/28/2012	Removed from WTC Site
Liebherr 1130-5.1	Truck Mounted Telescoping Boom	Liberty Street Bridge	PANYNJ	3908	11/30/2009	Bay Crane	65961	2007	P-448	197'	108' (Stowed)	143 Ton	Filed w/ PANYNJ	10/23/2009		11/2/2009	11/1/2009	Phoenix	Phoenix	Mark Jones	B-9328	9/30/2011	Removed from WTC Site
Liebherr LTM 1220	Truck Mounted Telescoping Boom	Liberty Street Bridge	PANYNJ	3546	3/9/2010	Bay Crane	70224	2005	P-449	197'	141' (Stowed)	235 Ton	Filed w/ PANYNJ	10/19/2009		11/6/2009	11/9/2009	Phoenix	SMS	Mark Jones	A-9328	9/30/2011	Removed from WTC Site
Tandano TR450XL-4	Mobile Crane	East Bathtub On MTA 1/9 Box	PANYNJ	3187	4/24/2010	Bay Crane	540316	2002	P-382	108'	50' (Stowed)	45 Ton	Filed w/ PANYNJ			11/10/2009	11/10/2009	Phoenix	Phoenix	Mark Jones	A-9328	9/30/2011	Removed from WTC Site
Liebherr LTM 1220	Truck Mounted Telescoping Boom	Liberty Street Bridge	PANYNJ	3546	3/9/2010	Bay Crane	70224	2005	P-449	197'	141' (Stowed)	235 Ton	Filed w/ PANYNJ	10/19/2009		11/13/2009	11/17/2009	Phoenix	SMS	Mark Jones	A-9328	9/30/2011	Removed from WTC Site
Liebherr LTM 1220	Truck Mounted Telescoping Boom	West Side Haul Rd	PANYNJ	3546	3/9/2010	Bay Crane	70224	2005	P-449	197'	141' (Stowed)	235 Ton	Filed w/ PANYNJ	10/19/2009		11/17/2009	11/19/2009	Phoenix	Phoenix	Mark Jones	A-9328	9/30/2011	Removed from WTC Site
Liebherr LTM 1090	Truck Mounted Telescoping Boom	Liberty Street Bridge	PANYNJ	3674	7/8/2010	Bay Crane	61839	2006	P-462	164'	62' (Stowed)	110 Ton	Filed w/ PANYNJ	11/19/2009		11/18/2009	11/18/2009	Phoenix	SMS	Owen James	B-6714	8/31/2011	Removed from WTC Site
Liebherr LR-1400	Crawler-Mounted Lattice Boom	Liberty Street Bridge	PANYNJ	3637	See Comments 02/10/2011	Bay Crane	74253	2004	P-333	92'	218' (luffing)	440 Ton	Filed w/ PANYNJ	11/19/2009		11/19/2009	7/24/2010	Skanska Granite	Skanska Granite	Dominick R Milone IV	B-9407	4/30/2012	Removed from WTC Site
Tandano TR450XL-4	Mobile Crane	East Bathtub On MTA 1/9 Box	PANYNJ	3585	8/2/2010	Bay Crane	540389	2005	P-382	108'	50' (Stowed)	45 Ton	Filed w/ PANYNJ			11/19/2009	3/3/2010	Tutor/Perini	Tutor/Perini	Gerwyn R Williams(Day) Lawrence Mysiuk(Night)	C1-6017 C1-7189	11/30/2011 5/31/2012	Removed from WTC Site
Tandano TR450XL-4	Mobile Crane	Liberty Street Bridge	PANYNJ	3132	9/26/2010	Bay Crane	540321	2001	P-382	108'	50' (Stowed)	45 Ton	Filed w/ PANYNJ			11/21/2009	11/21/2009	Phoenix	SMS	Joe Mainieri	B-5517	2/28/2012	Removed from WTC Site
Tandano TR450XL-4	Mobile Crane	Church Street	PANYNJ	4073	11/21/2010	Bay Crane	540565	2009	P-382	108'	50' (Stowed)	45 Ton	Filed w/ PANYNJ			11/27/2009	11/27/2009	Tutor/Perini	Tutor/Perini	Joe Felice	C1-7378	12/31/2011	Removed from WTC Site
Liebherr LTM 1250/1	Truck Mounted Telescoping Boom	Church Street	PANYNJ	3400	10/2/2010	Bay Crane	70581	2003	P414	236'	230' (Stowed)	300 Ton	Filed w/ PANYNJ	11/25/2009		11/27/2009	11/28/2009	Tutor/Perini	Tutor/Perini	Mark Jones	B-9328	9/30/2011	Removed from WTC Site
Manitowoc 14000	Crawler-Mounted Lattice Boom	Church Street	PANYNJ	4167	9.21.11	Tutor Saliba Corp	1400-1037	2007	P-495	124.7'	NA	220 Ton	Filed w/ PANYNJ	11/25/2009		11/28/2009	6/25/2011	Tutor/Perini	Tutor/Perini	Daniel Livsey	A- 9962	7/31/2012	Removed from WTC Site

Make and Model	Type	Location	Jurisdiction	NYCDOB CD #	CD Date Expiration	Owner / Vendor	Serial #	Year	Prototype No	Boom Length	Jib	Lift Capacity	NYCDOB CN #	CN # Date of Issuance	Annual Inspection Date	Date on Site	Date off Site	Contractor	Sub	Operator	License	License Exp Date	Actions Required or Comments
FAVCO M760D Series 2	Tower-Mounted Lattice Boom	West Bathtub PATH Station (North)	PANYNJ	3554	9/30/2011	Federated Equipment Co.	1164	2005	P-384	180'	NA	70 Ton	Filed w/ PANYNJ			11/29/2009	8/27/2011	DCM Erectors, Inc.	DCM Erectors, Inc.	Kevin McPaul (Day) Brian Dwyer (Night)	B-5779 B-9676	10/31/2011 10/31/2011	Crane Moved to East Bathtub 8/28/2011
Tandano TR450XL-4	Mobile Crane	East Bathtub On MTA 1/9 Box	PANYNJ	3299	1/23/2010	Bay Crane	540330	2002	P-382	108'	50' (Stowed)	45 Ton	Filed w/ PANYNJ	11/30/2009		12/1/2009		New York Concrete	New York Concrete	Idle	Idle	Idle	Removed from WTC site
Tandano TR450XL-4	Mobile Crane	East West Connector (Elev 300)	PANYNJ	3391	9/25/2010	Bay Crane	540355	2003	P-382	108'	50' (Stowed)	45 Ton	Filed w/ PANYNJ			12/8/2009	2/2/2010	J H Reid	J H Reid	John Samuel	B-5608	3/8/2011	Removed from WTC site
Tandano TR450XL-4	Mobile Crane	Liberty Street Bridge	PANYNJ	3475	7/19/2010	Bay Crane	540366	2004	P-382	108'	50' (Stowed)	45 Ton	Filed w/ PANYNJ			1/14/2010	1/14/2010	Phoenix	SMS	William Larkin	C1-7153	11/30/2011	
Tandano TR450XL-4	Mobile Crane	East Bathtub On MTA 1/9 Box	PANYNJ	3410	12.12.10	Bay Crane	540360	2004	P-382	108'	50' (Stowed)	45 Ton	Filed w/ PANYNJ			1.21.10	5/25/2010	J H Reid	J H Reid	Eric Williams	C1-9623	1/31/2012	Removed fromWTC Site
Tandano TR450XL-4	Mobile Crane	Liberty Street Bridge	PANYNJ	3611	10.17.10	Bay Crane	540393	2005	P-382	108'	50' (Stowed)	45 Ton	Filed w/ PANYNJ			1.27.10	Phoenix	SMS	SMS	Mark Jones	B-9358	9.30.11	removed from WTC site
Tandano TR450XL-4	Mobile Crane	East Bathtub On MTA 1/9 Box	PANYNJ	3518	12.7.10	Bay Crane	540371	2005	P-382	108'	50' (Stowed)	45 Ton	Filed w/ PANYNJ			1/26/2010	3/26/2010	New York Concrete	New York Concrete	Idle	Idle	Idle	Removed from WTC Site
Liebher 1220	Mobile Crane	West Haul Rd	PANYNJ	3546	3.9.10	Bay Crane	70224	2005	P-449	197	141	338	Filed w/ PANYNJ			2/2/2010	2/20/2010	Phoenix	Phoenix	Robert Taylor	B-5293	7.31.12	Removed from WTC Site
Liebherr 1130-5.1	Truck Mounted Telescoping Boom	Liberty Street Bridge	PANYNJ	3926	1/2/2011	Bay Crane	65970	2007	P-488	197'	108' (Stowed)	143 Ton	Filed w/ PANYNJ			2/10/2010	2/11/2010	Phoenix	SMS	Dominick Milone	B-7829	3/31/2012	Removed from WTC Site
Grove RT600E	Mobile Crane	Liberty Street	PANYNJ	4063	11/5/2011	Perini Corporation	228399	2008	P-374	105'	NA	50 Ton	Filed w/ PANYNJ			03/04/10	04/26/11	Tutor/Perini	Tutor/Perini	Peter O'Connor	C1-7858	2/28/2012	Removed fromWTC Site
Tandano TR450XL-4	Mobile Crane	Liberty Street Bridge	PANYNJ	3756	1/12/2011	Bay Crane	540444	2007	P-382	108'	50' (Stowed)	45 Ton	Filed w/ PANYNJ			3/10/2010	3/10/2010	Phoenix	SMS	Joe Felice	C1-7378	7/31/2012	Removed from WTC Site
Liebherr LTM 1200	Mobile Crane	West Haul Rd	PANYNJ	4086	12/29/2010	Bay Crane	70465	2008	P-449	197'	141' (Stowed)	235 Ton	Filed w/ PANYNJ			3/8/2010	3/20/2010	Phoenix	Phoenix	Robert VonSee	B-9212	7/31/2012	Removed from WTC Site
FAVCO M760D Series 2	Tower-Mounted Lattice Boom	West Bathtub PATH Station (South)	PANYNJ	4189	3/27/2011	Federated Equipment Co.	1473	2009	P-384		NA	70 Ton	Filed w/ PANYNJ			3/18/2010	6/4/2011	Bovis Lend Lease	W&W Glass	Idle	Idle	Idle	Crane repositioned to East Bathtub
Tadano TR450XL-4	Mobile Crane	Liberty Street Bridge	PANYNJ	3747	12/21/2010	Bay Crane	540442	2007	P-382	108.3'	50' (Stowed)	45 Ton	Filed w/ PANYNJ			4/1/2010	4/2/2010	Phoenix	Phoenix	William Larkin	C1-7153	11/3/2011	Removed from WTC Site
Tadano TR450XL-4	Mobile Crane	Liberty Street Bridge	PANYNJ	3475	7/19/2010	Bay Crane	540366	2004	P-382	108.3'	50' (Stowed)	45 Ton	Filed w/ PANYNJ			4/5/2010	4/6/2010	SGS	SGS	Christopher G. Verso	C1-9556	3/31/2012	Removed from WTC Site
Linkbelt RTC8050	Mobile Crane	Church Street	PANYNJ	4104	2/27/2011	New York Crane	J6J8-0184	2009	P-518	110'	51' (Stowed)	50 Ton	Filed w/ PANYNJ			4/10/2010	4/10/2010	DCM Erectors, Inc.	DCM Erectors, Inc.	John Frisild	C1-9451	3/31/2012	Removed from WTC Site
Linkbelt 298-HSL	Crawler-Mounted Lattice Boom	East Bathtub Area 4C	PANYNJ	4131	5/12/2010	New York Crane	P3J8-0515	2008	P-508	220'	NA	230 Ton	Filed w/ PANYNJ			4/10/2010	4/29/2010	DCM Erectors, Inc.	DCM Erectors, Inc.	Brian Dwyer	B-9676	11/30/2012	Removed from WTC Site
Manitowoc 18000	Crawler-Mounted Lattice Boom	East Bathtub Area 4C	PANYNJ	4164	11/27/2011	New York Crane	1800-1054	2008	P526	180'	130' (Luffing) 140' Mast	825 ton	Filed w/ PANYNJ			04/11/10	09/17/11	DCM Erectors, Inc.	DCM Erectors, Inc.	Idle	Idle	Idle	Removed fromWTC Site
Tadano TR450XL-4	Mobile Crane	Liberty Street Bridge	PANYNJ	3475	7/19/2010	Bay Crane	540366	2004	P-382	108.3'	50' (Stowed)	45 Ton	Filed w/ PANYNJ			4/23/2010		SGS	SGS	John Cosentino	A-5729	3/31/2010	Removed from WTC Site
Demag AC55	Mobile Crane	Liberty Street Bridge	PANYNJ	3977	4/16/2010	Bay Crane	15018	2008	P-498	131.5'	66.3' (Stowed)	65 Ton	Filed w/ PANYNJ			5/6/2010	5/6/2010	Skanska Granite	Skanska Granite	Charles Noeth Jr	A-9782	3/31/2010	Removed from WTC Site

Make and Model	Type	Location	Jurisdiction	NYCDOB CD #	CD Date Expiration	Owner / Vendor	Serial #	Year	Prototype No	Boom Length	Jib	Lift Capacity	NYCDOB CN #	CN # Date of Issuance	Annual Inspection Date	Date on Site	Date off Site	Contractor	Sub	Operator	License	License Exp Date	Actions Required or Comments
Tandano TR450XL-4	Mobile Crane	Liberty Street Bridge	PANYNJ	3756	1/12/2011	Bay Crane	540444	2007	P-382	108'	50' (Stowed)	45 Ton	Filed w/ PANYNJ			5/11/2010	5/11/2010	Skanska Granite	Skanska Granite	Scott McClain	C1-9795	6/30/2010	Removed from WTC Site
Tandano TR450XL-4	Mobile Crane	Liberty Street Bridge	PANYNJ	3756	1/12/2011	Bay Crane	540444	2007	P-382	108'	50' (Stowed)	45 Ton	Filed w/ PANYNJ			5/15/2010	5/17/2010	Skanska Granite	Skanska Granite				Removed from WTC Site
Manitowoc 16000	Crawler-Mounted Lattice Boom	Fulton Street East	PANYNJ	4133	9.15.11	DCM Erectors, Inc	1600-1093	2009	P-516	118'	157' (Luffing)	440 Ton	528-09			05/17/10	5/6/	DCM Erectors, Inc.	DCM Erectors, Inc.	Kevin McPaul	B-5779	11/30/2012	Removed fromWTC Site
Liebherr LTM-1120/1	Hydraulic Truck Mounted	Liberty Street Bridge	PANYNJ	3332	4/10/2011	Bay Crane	67024	2000	P-376	184'	92' (Stowed)	150 Ton	Filed w/ PANYNJ			05/22/10	05/23/10	Skanska Granite	Skanska Granite	Dominic R Milone	B-9407	4/30/2012	Removed from WTC Site
Tandano TR450XL-4	Mobile Crane	East Bathtub On MTA 1/9 Box	PANYNJ	3069	3/12/2011	Bay Crane	540306	2001	P-382	108'	50' (Stowed)	45 Ton	Filed w/ PANYNJ			5/24/2010	5/24/2010	Skanska Granite	Skanska Granite	Christopher G Verso	C1-9556	3/31/2012	Removed from WTC Site
Tandano TR450XL-4	Mobile Crane	East Bathtub On MTA 1/9 Box	PANYNJ	3410	12.12.10	Bay Crane	540360	2004	P-382	108'	50' (Stowed)	45 Ton	Filed w/ PANYNJ			6/1/2010	6/1/2010	Skanska Granite	Skanska Granite	Idle	Idle	Idle	Removed from WTC Site
Tandano TR450XL-4	Mobile Crane	1/9 Box Bent 150	[redacted]	3920	12/20/2011	Skanska	540482	2007	P-382	108'	50' (Stowed)	45 Ton	Filed w/ PANYNJ			6/2/2010		Skanska Granite	Skanska Granite	Wayne Fallen	A-9411	8/31/2014	
Liebheer LTM 1090	Hydraulic Truck Mounted	East West Connector (Elev 300)	PANYNJ	4016	7/25/2010	Bay Crane	62023	2008	P462	164'	62' (Stowed)	110 Ton	Filed w/ PANYNJ			6/4/2010	6/4/2010	Skanska Granite	Skanska Granite	Idle	Idle	Idle	Removed fromWTC Site
Demag AC40-1	Mobile Crane	East Bathtub On MTA 1/9 Box	PANYNJ	3522	12/29/2010	Bay Crane	70491	2004	P360	102.3'	42.7' (Stowed)	45 Ton	Filed w/ PANYNJ			6/18/2010	6/18/2010	Phoenix	SMS	Denis Nolan	B-9394	3/31/2012	Removed fromWTC Site
Tadano TR450XL-4	Mobile Crane	Liberty Street Bridge	PANYNJ	3325	3/19/2011	Bay Crane	540334	2003	P-382	108.3'	50' (Stowed)	45 Ton	Filed w/ PANYNJ			6/18/2010	6/18/2010	Phoenix	Phoenix	Frank Loppolo	A-9430	3/31/2012	Removed fromWTC Site
Tadano TR450XL-4	Mobile Crane	Liberty Street Bridge	PANYNJ	3475	7/19/2010	Bay Crane	540366	2004	P-382	108.3'	50' (Stowed)	45 Ton	Filed w/ PANYNJ			6/28/2010	6/28/2010	Skanska Granite	Skanska Granite	Idle	Idle	Idle	Removed from WTC Site
Tadano TR450XL-4	Mobile Crane	East Bathtub On MTA 1/9 Box	PANYNJ	3328	3/19/2011	Bay Crane	540334	2003	P-382	108.3'	50' (Stowed)	45 Ton	Filed w/ PANYNJ			7/15/2010	7/28/2010	Skanska Granite	Skanska Granite	Roger E Johansson	C1-9584	7/31/2012	Removed from WTC Site
Liebherr LTM-1220	Hydraulic Truck Mounted	Liberty Street Bridge	PANYNJ	3546	3/19/2011	Bay Crane	70224	2005	P-449	197'	141' (Stowed)	235 Ton	Filed w/ PANYNJ			07/23/10	07/25/10	Skanska Granite	Skanska Granite	Dominic R Milone	B-7829	3/31/2012	Removed from WTC Site
Tadano TR450XL-4	Mobile Crane	East Bathtub On MTA 1/9 Box	PANYNJ	3464	6/8/2011	Bay Crane	540365	2004	P-382	108.3'	50' (Stowed)	45 Ton	Filed w/ PANYNJ			7/26/2010	8.2.10	Skanska Granite	Skanska Granite	Michael Becker	A-9954	3/31/2010	Removed from WTC Site
Tadano TR450XL-4	Mobile Crane	East Bathtub On MTA 1/9 Box	PANYNJ	3464	6/8/2011	Bay Crane	540365	2004	P-382	108.3'	50' (Stowed)	45 Ton	Filed w/ PANYNJ			7/26/2010	8/26/2010	Skanska Granite	Skanska Granite	Roger E Johansson	A-9954	3/31/2012	Removed from WTC Site
Liebherr LTM-1130/5.1	Hydraulic Truck Mounted	Liberty Street Bridge	PANYNJ	3896	11/9/2010	Bay Crane	65950	2007	P-488	197'	108' (Stowed)	143 Ton	Filed w/ PANYNJ			07/26/10	08/14/10	Skanska Granite	Skanska Granite	Dominic R Milone	B-7820	8/31/2011	Removed from WTC Site
Liebherr LTM-1090	Hydraulic Truck Mounted	Liberty Street Bridge	PANYNJ	4035	8/20/2010	Bay Crane	62026	2008	P-462	164'	62' (Stowed)	110 Ton	Filed w/ PANYNJ			07/30/10	07/30/10	Skanska Granite	Skanska Granite	Charles T Noeth			Removed from WTC Site
Tandano TR450XL-4	Mobile Crane	East Bathtub On MTA 1/9 Box	PANYNJ	3611	10.17.10	Bay Crane	540393	2005	P-382	108'	50' (Stowed)	45 Ton	Filed w/ PANYNJ			8/12/2010	10.17.10	Skanska Granite	Skanska Granite	Joe Marchiano	C1-8016	11/30/2011	Removed from WTC site
Liebherr LTM 1250.1	Hydraulic Truck Mounted	Liberty Street Bridge	PANYNJ	3555	4/4/2011	Bay Crane	70647	2005	P-414	236'	375' (Stowed)	300 ton	Filed w/ PANYNJ			8/14/2010	8/15/2010	Skanska Granite	Skanska Granite	Richard Vergona	B-9213	7/31/2012	Removed from WTC Site
Dematic AC 40-1	Mobile Crane	Memorial East Elevation307	PANYNJ	3358	6/9/2011	Bay Crane	70502	2003	P360	102'	28' (Stowed)	40 ton	Filed w/ PANYNJ			8/14/2010	10/4/2010	Skanska Granite	Skanska Granite	Jonathan Zommer	C1-9940	2/28/2012	Removed fromWTC Site
Liebherr LTM 1220	Hydraulic Truck Mounted	West Haul Rd Zone-1	PANYNJ	3546	3/9/2011	Bay Crane	70224	2005	P-449	197	141	338	Filed w/ PANYNJ			8/18/2010		Phoenix	Phoenix	Mark Jones	B-9328	9/30/2011	
Tadano TR450XL-4	Mobile Crane	East Bathtub On MTA 1/9 Box	PANYNJ	3328	3/19/2011	Bay Crane	540334	2003	P-382	108.3'	50'(Stowed)	45 Ton	Filed w/ PANYNJ			8/26/2010	9/29/2010	Skanska Granite	Skanska Granite	Robert Deneen	C1-6213	7/31/2010	Removed from WTC Site

Make and Model	Type	Location	Jurisdiction	NYCDOB CD #	CD Date Expiration	Owner / Vendor	Serial #	Year	Prototype No	Boom Length	Jib	Lift Capacity	NYCDOB CN #	CN # Date of Issuance	Annual Inspection Date	Date on Site	Date off Site	Contractor	Sub	Operator	License	License Exp Date	Actions Required or Comments
Tadano TR450XL-4	Mobile Crane	West Haul Rd Zone 1/2	PANYNJ (NYS)	3626	12/22/2010	Bay Crane	540399	2005	P-382	108.3'	50'(Stowed)	45 Ton	Filed w/ PANYNJ			8/30/2010	9/3/2010	Phoenix	Phoenix	Doug Eberthart (Day)	C1-7448	8/31/2011	Removed fromWTC Site
Tadano TR450XL-4	Mobile Crane	East Bathtub On MTA 1/9 Box	PANYNJ (NYS)	3755	1/12/2011	Bay Crane	540443	2007	P-382	108.3'	50'(Stowed)	45 Ton	Filed w/ PANYNJ			9/8/2010	9/9/2010	Skanska Granite	Skanska Granite	Scott McClain	C1-9795	6/30/2012	Removed from WTC Site
Tadano TR450XL-4	Mobile Crane	East Bathtub On MTA 1/9 Box	PANYNJ	3135	See Comment	Bay Crane	540320	2001	P-382	108.3'	50'(Stowed)	45 Ton	Filed w/ PANYNJ			9/28/2010	9/29/2010	Skanska Granite	SMS	Robert Bernardo	B-5965	12/31/2011	Removed from WTC Site
Tandano TR450XL-4	Mobile Crane	Memorial East Elevation307	PANYNJ	3585	8/2/2011	Bay Crane	540389	2005	P-382	108'	50' (Stowed)	45 Ton	Filed w/ PANYNJ			10/6/2010	11/2/2010	Skanska Granite	Skanska Granite	Robert Deneen	C1-6213	7/31/2012	Removed fromWTC Site
Tadano TR450-1-00101	Mobile Crane	East Bathtub Eleva.226	PANYNJ	3184	7/11/2011	Federal Crane	540317	2001	P-382	108.3'	50'(Stowed)	45 Ton	Filed w/ PANYNJ			10/5/2010	6/28/2011	EIC	EIC	Joseph Mullen	A-9505	3/31/2013	Removed fromWTC Site
Liebherr LTM 1220	Hydraulic Truck Mounted	West Haul Rd Zone 1/2	PANYNJ	4086	12/29/2010	Bay Crane	70465	2009	P-449	197	141	235 Ton	Filed w/ PANYNJ			10/2/2010	10/14/2010	Phoenix	Phoenix	Richard Vergona	B-9213	7/31/2012	Removed from WTC Site
Tandano TR450XL-4	Mobile Crane	East Bathtub On MTA 1/9 Box	PANYNJ	3585	8/2/2011	Bay Crane	540389	2005	P-383	108.3	50'(Stowed)	45 Ton	Filed w/PANYNJ			10.18.10	4/29/2011	Skanska Granite	Skanska Granite	Joe Marchiano	C1-8018	11/30/2011	Removed fromWTC Site
Tandano TR450XL-4	Mobile Crane	Memorial East Elevation307	PANYNJ	3567	5/6/2011	Bay Crane	540385	2005	P-382	108'	50' (Stowed)	45 Ton	Filed w/ PANYNJ			11/5/2010	11/5/2010	Skanska Granite	Skanska Granite	Steve Ellis	C1-9885	6/30/2012	Removed from WTC Site
Tandano TR450XL-4	Mobile Crane	Vesey Street	PANYNJ	3390	9/25/2011	Bay Crane	540354	2003	P-382	108'	50' (Stowed)	45 Ton	Filed w/ PANYNJ			11/4/2010	11/5/2010	Skanska Granite	ABC Construction	Thomas Smakal	C1-9562	7/31/2012	Removed from WTC Site
Tandano TR450XL-4	Mobile Crane	Memorial East Elevation307	PANYNJ	3585	8/2/2011	Bay Crane	540389	2005	P-382	108'	50' (Stowed)	45 Ton	Filed w/ PANYNJ			11/10/2010	11/12/2010	Skanska Granite	Skanska Granite	Scott McClair	C1-9795	6/30/2012	Removed from WTC Site
Tandano TR450XL-4	Mobile Crane	Vesey Street	PANYNJ	3390	9/25/2011	Bay Crane	540354	2003	P-382	108'	50' (Stowed)	45 Ton	Filed w/ PANYNJ			11/10/2010	11/12/2010	Skanska Granite	ABC Construction	Thomas Smakal	C1-9562	7/31/2012	Removed fromWTC Site
Liebherr LTM-1220	Hydraulic Truck Mounted	West Street (Zone 1/2)	PANYNJ (NYS)	4086	12/29/2010	Bay Crane	70465	2009	P-449	197'	141' (Stowed)	235 Ton	Filed w/ PANYNJ			11/17/10	11/19/10	Phoenix	Phoenix	Richard Vergona	B-9213	7/31/2012	Removed from WTC Site
Tandano TR450XL-4	Mobile Crane	Memorial East Elevation307	PANYNJ	3390	9/25/2011	Bay Crane	540354	2003	P-382	108'	50' (Stowed)	45 Ton	Filed w/ PANYNJ			10/16/2010	12/23/2010	Skanska Granite	Skanska Granite	Thomas Smakal	C1-9563	7/31/2010	Removed fromWTC Site
Tandano TR450XL-4	Mobile Crane	Liberty Street	PANYNJ	4073	11/21/2011	Bay Crane	540565	2003	P-382	108'	50' (Stowed)	45 Ton	Filed w/ PANYNJ			12/3/2010	12/6/2010	Skanska Granite	Skanska Granite	Joe Flice	C1-7378	12/31/2011	Removed from WTC site
Liebherr LTM-1220	Hydraulic Truck Mounted	Liberty Street	PANYNJ	4086	12/29/2010	Bay Crane	70466	2009	P-449	197'	141' (Stowed)	235 Ton	Filed w/ PANYNJ			12/07/10	12/06/10	Skanska Granite	SMS	Richard Vergona	B-9213	7/31/2012	Removed fromWTC Site
Tadano TR450XL-4	Mobile Crane	East Bathtub On MTA 1/9 Box	PANYNJ	3593	8/23/2011	Bay Crane	540390	2005	P-382	108'	50' (Stowed)	45 Ton	Filed w/ PANYNJ			12/24/2011	2/9/2011	Skanska Granite	Skanska Granite	Thomas Smakal	C1-9583	7/31/2010	Removed fromWTC Site
Tadano TR450XL-4	Mobile Crane	Memorial East Elevation307	PANYNJ	3328	3/19/2011	Bay Crane	540334	2003	P-382	108'	50' (Stowed)	45 Ton	Filed w/ PANYNJ			1/24/2011	1/24/2011	Skanska Granite	Skanska Granite	Scott McClain	C1-9795	6/30/2012	Removed fromWTC Site
Tadano TR150XL-4	Mobile Crane	Vesey Street	PANYNJ	3598	9/13/2011	Bay Crane	FD0806	2005	p-459	78'	18' (Stowed)	15 Ton	Filed w/ PANYNJ			2/3/2011	2/3/2011	Skanska Granite	Skanska Granite				Removed fromWTC Site
Tadano TR450XL-4	Mobile Crane	Vesey Street	PANYNJ	3921	See Comment	Skanska	540488	2007	P-382	108'	50' (Stowed)	45 Ton	Filed w/ PANYNJ			2/9/2011	6/4/2011	Skanska Granite	Skanska Granite	Tom Smakal	C1-9582	7/31/2012	Removed fromWTC Site

Make and Model	Type	Location	Jurisdiction	NYCDOB CD #	CD Date Expiration	Owner / Vendor	Serial #	Year	Prototype No	Boom Length	Jib	Lift Capacity	NYCDOB CN #	CN # Date of Issuance	Annual Inspection Date	Date on Site	Date off Site	Contractor	Sub	Operator	License	License Exp Date	Actions Required or Comments
Liebherr LTM-1090	Hydraulic Truck Mounted	Memorial East Elevation307	PANYNJ	3674	7/6/2011	Bay Crane	61839	2008	P-462	164'	62' (Stowed)	110 Ton	Filed w/ PANYNJ			02/14/11	02/19/11	Skanska Granite	Skanska Granite	Dominick R Milone	B-9407	4/30/2012	Removed from WTC Site
Tadano TR450XL-4	Mobile Crane	East Bathtub On MTA 1/9 Box	PANYNJ	3755	1/12/2012	Bay Crane	540443	2007	P-382	108.3'	50'(Stowed)	45 Ton	Filed w/ PANYNJ			3/8/2011	3/8/2011	Tutor/Perini	Tutor/Perini	Peter O'Connor	C1-7858	2/28/2012	Removed fromWTC Site
Tadano TR450XL-4	Mobile Crane	East Bathtub On MTA 1/9 Box	PANYNJ	3328	3/19/2011	Bay Crane	540334	2003	P-382	108'	50' (Stowed)	45 Ton	Filed w/ PANYNJ			4/26/2011	5/21/2011	Tutor/Perini	Tutor/Perini	Peter O'Connor	C1-7858	2/28/2012	Removed fromWTC Site
Linkbelt RTC 8040 II	Mobile Crane	West Haul Rd	PANYNJ	3291	See Comment	Tully	F7-12-5777	2002		105		40-Ton				4/29/2011	5/9/2011	Tully	Tully	Jacques Haggiag	B- 5916	8/31/2011	Remove from WTC Site
Liebherr Werke Ehinhen LTM 1250/1	Hydraulic Truck Mounted	Fulton Street	PANYNJ	3292	1/7/2012	Cranes Inc	70549	2003	P-414	238	138 (Stowed)	300 Ton	Filed w/ PANYNJ			5/21/2011	5/22/2011	DCM Erectors, Inc.	DCM Erectors, Inc.	John Franciosa	B-9402	9/30/2012	Removed from WTC Site
Grove RT600E	Mobile Crane	1/9 Box North	PANYNJ	4063	11/5/2011	Tutor Saliba Corp	228399	2008	P-374	105'	NA	50 Ton	Filed w/ PANYNJ			05/21/11	11/30/12	Tutor/Perini	Tutor/Perini	Peter O'Connor	C1-7858	2/28/2012	Removed from WTC Site
FAVCO M760D Series 2	Tower-Mounted Lattice Boom	East Bathtub Transit Hall **EAST**	[redacted]	4189	3/27/2011	Federated Equipment Co.	1473	2009	P-384	211"	NA	70 Ton	Filed w/ PANYNJ			6/6/2011		DCM Erectors, Inc.	DCM Erectors, Inc., Sorbara, EIC	Gerry Harney(day) Thomas Chorusey(night)	B-9061 B-9116	7/31/2012 2/28/2015	Inspect 2.16.12, Load test completed 6.21.11
Tadano TR450XL-4	Mobile Crane	East Bathtub On MTA 1/9 Box	PANYNJ	3921	12/20/2011	Skanska	540486	2007	P-382	108'	50' (Stowed)	45 Ton	Filed w/ PANYNJ			6/11/2011	7/18/2011	Skanska Granite	Skanska Granite	Scott McClain	C1-9795	6/30/2012	Removed fromWTC Site
Liebherr LR116072	Fulton Street East	Fulton Street East	[redacted]	3418	2/10/2012	Skanska	134061	2003		229'	NA	150 Ton	Filed w/ PANYNJ			7/17/2011		Skanska Granite	Skanska Granite	Owen James(day) Robert Friberg(night)	B-6714 B-5736	8/31/2014 12/31/2014	
Tadano TR450XL-4	Mobile Crane	Vesey Steet	PANYNJ	3919	12/20/2011	Skanska	540481	2007	P-382	108'	50' (Stowed)	45 Ton	N/R			8.4.11		Skanska Granite	Skanska Granite	Joe Marchiano	C1-8016	11/30/2011	Removed from WTC Site
Tandano TR450XL-4	Mobile Crane	West Haul Rd	[redacted]	3134	9/26/2011	Bay Crane	540442	2001	P-382	108'	50' (Stowed)	45 Ton	Filed w/ PANYNJ			8/11/2011		Judlau	Judlau	Charles Noeth	B-9782	2/28/2014	
Tandano TR450XL-4	Mobile Crane	Fulton Street	PANYNJ	3842	8/22/2011	Bay Crane	540481	2007	P-382	108'	50' (Stowed)	45 Ton	Filed w/ PANYNJ			8/26/2011	8/27/2011	DCM Erectors, Inc.	DCM Erectors, Inc.	John Fodera	A-7645	12/31/2011	Removed from WTC Site
Liebheer LTM 1500	Hydraulic Truck Mounted	Fulton Street	PANYNJ	4061	10/29/2011	Bay Crane	73199	2008	P399	276'	299' (Stowed)	600 ton	Filed w/PANYNJ			8/26/2011	31-Aug	DCM Erectors, Inc.	DCM Erectors, Inc.	Graham Dickson(day) Thomas Sullivan(night)	B-9408 B-9221	5/31/2012 04/30/2012	Removed from WTC Site
Demag AC 500-1	Hydraulic Truck Mounted	Church Street	PANYNJ	3389	9/26/2011	New York Crane	84095	2003	P-433	184'	NA	550 Ton	Filed w/ PANYNJ			08/26/11	09/17/11	DCM Erectors, Inc.	DCM Erectors, Inc.	Graham Dickson(day) Thomas Sullivan(night)	B-9408 B-9221	5/31/2012 04/30/2012	Removed from WTC Site
FAVCO M760D Series 2	Tower-Mounted Lattice Boom	East Bathtub Transit Hall **WEST**	[redacted]	3554	9/30/2011	Federated Equipment Co.	1164	2005	P-384	180'	NA	70 Ton	Filed w/ PANYNJ			8/29/2011		DCM Erectors, Inc.	DCM Erectors, Inc.	Kevin McPaul (Day) Brian Dwyer (Night)	B-5779 B-9676	10/31/2014 11/30/2012	Inspection 12.29.11, exp.date under review
Liebherr LTM 1090	Hydraulic Truck Mounted	West Haul Rd	PANYNJ	4016	7/25/2012	Bay Crane	2008	62023	P462	164'	62' (Stowed)	110 ton	Filed w/ PANYNJ			9/16/2011	9/16/2011	Skanska Granite	Skanska Granite	Robert Bernardo	B-5965	12/31/2011	Removed from WTC Site
Grove RT600E	Mobile Crane	1/9 Box North	[redacted]	4206	1/26/2012	Tutor Saliba Corp	227768	2007	P-374	105'	NA	50 Ton	Filed w/ PANYNJ			09/26/11		Tutor/Perini	Tutor/Perini	Walter Mysiuk(day) Lawrence Mysiuk(night)	A-7471 C1-7189	4/30/2012 5/31/2012	Remove from WTC Site
Tandano TR450XL-4	Mobile Crane	1/9-Box South	PANYNJ	3593	8/23/2012	Bay Crane	540390	2005	P-382	108'	50' (Stowed)	45 Ton	Filed w/ PANYNJ			11/9/2011	11/10/2011	Skanska Granite	Skanska Granite	Robert Taylor	B-5293	7/31/2012	Removed from WTC Site

Make and Model	Type	Location	Jurisdiction	NYCDOB CD #	CD Date Expiration	Owner / Vendor	Serial #	Year	Prototype No	Boom Length	Jib	Lift Capacity	NYCDOB CN #	CN # Date of Issuance	Annual Inspection Date	Date on Site	Date off Site	Contractor	Sub	Operator	License	License Exp Date	Actions Required or Comments
Tandano TR450XL-4	Mobile Crane	1/9-Box Bent 100	PANYNJ			Bay Crane			P-382	108'	50' (Stowed)	45 Ton	Filed w/ PANYNJ			1/10/2012	1/10/2012	Tutor/Perini	Tutor/Perini				Removed from WTC Site
Tandano TR450XL-4	Mobile Crane	1/9-Box Bent 100	PANYNJ	3410	12/12/2012	Bay Crane	540360	2004	P-382	108'	50' (Stowed)	45 Ton	Filed w/ PANYNJ			1/17/2012	1/19/2012	Skanska Granite	Skanska Granite	John Duque	C1-7227	9/30/2014	Removed from WTC Site
Tandano TR450XL-4	Mobile Crane	1/9-Box Bent 100	PANYNJ			Bay Crane			P-382	108'	50' (Stowed)	45 Ton	Filed w/ PANYNJ			2/7/2012	2/7/2012	Tutor/Perini	Tutor/Perini				Removed from WTC Site
WTC-1	WTC-1	WTC-1	WTC-1	WTC-1	WTC-1	WTC-1	WTC-1	WTC-1	WTC-1	WTC-1	WTC-1	WTC-1	WTC-1	WTC-1	WTC-1	WTC-1	WTC-1	WTC-1	WTC-1	WTC-1	WTC-1	WTC-1	WTC-1
FAVCO M760D	Tower-Mounted Lattice Boom	WTC-1 South Core Crane # 2	[redacted]	3742	9/28/2011 (wire rope 3.3.12)	Federated Equipment Co.	1167	2006	P-384	180'	N/A	65 Ton	Filed w/ PANYNJ	6/26/2008		05/18/07		Tishman Constrcution Co.	DCM Erectors, Inc.	Phil McPaul	A-9226	4/30/2012	Inspected 12.9.11 41st Jump on 2/6/12 to Elevation 1533'
FAVCO M760D	Tower-Mounted Lattice Boom	WTC-1 North Core Crane # 1	[redacted]	3743	9/28/2011 (wire rope 4.7.12)	Federated Equipment Co.	1166	2006	P-384	180'	N/A	65 Ton	Filed w/ PANYNJ	6/26/2008		04/18/07		Tishman Constrcution Co.	DCM Erectors, Inc.	Danny Dunn	A-5956	8/31/2014	Inspected 12.9.11 41st Jump on 2/6/12 to Elevation 1533'
Grove RT600E	Mobile Crane	West Street Haul Rd	PANYNJ (NYS)	3956	2/1/2010	Collavino Constructio n Co.	228738	2008	P-374	105'	29' (Stowed)	50 Ton	N/R			02/01/07	07/15/09	Tishman Construction Co.	Collavino Construction Co.	Frederic M Bartz	C-1 -9852	11/30/2011	Removed from WTC Site
Broderson IC-35-2D	Mobile Crane (Carry Deck)	Building 1 Foundations	PANYNJ	Need NYCDOB Filing		United Rental	46126			19'	8'	8 Ton	N/R			11/06/07	03/19/09	Tishman Construction Co.	Laquila	Idle	Idle	Idle	Removed from WTC Site
Tadano TR450XL-4	Mobile Crane	Vesey Street	NYCDOB	3464	6/9/2009	Bay Crane	540365	2004	P-382	108.3'	50 (Stowed)	45 Ton				08/12/08	08/18/08	Tishman Construction Co.	Laquila	Joseph Ruggero	C1-6626	4/30/2009	Removed from WTC Site
Tadano TR450XL-4	Mobile Crane	Vesey Street	NYCDOB	3132	9/26/2008	Bay Crane	540321	2001	P-382	108.3'	50 (Stowed)	45 Ton				08/11/08	08/11/08	Tishman Construction Co.	Laquila	Joseph Ruggero	C1-6626	4/30/2009	Removed from WTC Site
Tadano TR450XL-4	Mobile Crane	Vesey Street	NYCDOB	3593	8/23/2008	Bay Crane	540390	2005	P-382	108.3'	50 (Stowed)	45 Ton				08/12/08	08/12/08	Tishman Construction	Laquila	Joseph Ruggero	C1-6626	4/30/2009	Removed from WTC Site
Tadano TR450XL-4	Mobile Crane	Vesey Street	NYCDOB	3134	9/26/2008	Bay Crane	540319	2001	P-382	108.3'	50 (Stowed)	45 Ton				08/22/08	08/28/08	Tishman Construction	Laquila	Joey Ruggerio	C1-6626	4/30/2009	Removed from WTC Site
Tadano TR450XL-4	Mobile Crane	Vesey Street	NYCDOB	3142	11/8/2008	Bay Crane	540311	2001	P-382	108.3'	50 (Stowed)	45 Ton				08/29/08	08/05/08	Tishman Construction Co.	Laquila	Joey Ruggerio	C1-6626	4/30/2009	Removed from WTC Site
Tadano TR450XL-4	Mobile Crane	Vesey Street	NYCDOB	3593	8/23/2009	Bay Crane	540390	2005	P-382	108.3'	50 (Stowed)	45 Ton	Need NYCDOB Filing			09/08/08	11/20/09	Tishman Construction Co.	Laquila	Joey Ruggerio	C1-6626	4/30/2009	Removed from WTC Site
Grove RT600E	Mobile Crane	Vesey Street	NYCDOB	3851	4/2/2009	Liquila	225363	2006	P-374	105	29 (Stowed)	50 Ton				11/21/08	03/27/09	Tishman Construction Co.	Laquila	John Colella	A-8011	10/31/2011	Removed from WTC Site
Broderson IC-35-2C	Mobile Crane (Carry Deck)	Building 1 Foundations	PANYNJ	Need NYCDOB Filing		United Rental	51632	2005		19	8 (Stowed)	8 Ton	N/R			12/16/08	01/16/09	Tishman Construction Co.	Collavino Construction Co.	Idle	Idle	Idle	Removed from WTC Site
Broderson IC-20	Mobile Crane (Carry Deck)	South Core, Cell-6, B4 Level	PANYNJ	N/A	N/A	United Rental	45522	2003	NA	22'	7' (Stowed)	2.5 Ton	N/R			01/21/09	10/15/09	Tishman Construction Co.	Collavino Construction Co.	Patrick Johnson	A-8052	5/31/2012	Removed from WTC Site
Manitowoc 16000	Crawler-Mounted Lattice Boom	Fulton Street East	PANYNJ	4133	5/18/2010	DCM Erectors, Inc	1600-1093	2009	P-516	118'	98.4	440 Ton	528-09			08/09/09		Tishman Construction Co.	DCM Erectors, Inc.	Kevin McPaul Day	B-5779	10/31/2011	Moved to WTC HUB 5/17/2010
Demag AC 500-1	Hydraulic Truck Mounted	West Street Haul Rd	PANYNJ	3389	9/26/2009	New York Crane	84095	2003	P-433	184'	NA	550 Ton	Filed w/ PANYNJ			09/16/09	09/24/09	Tishman Construction Co.	DCM Erectors, Inc.	Thomas Sullivan	B-9221	4/30/2012	Removed from WTC Site
Manitowoc 16000	Crawler-Mounted Lattice Boom	Building 1 West Side	PANYNJ	4164	see comment 10.15.10	New York Crane	1600-1054	2008	P526	180'	130' (Luffing)	660 Ton	Filed w/ PANYNJ			09/19/09	04/14/10	Tishman Construction Co.	DCM Erectors, Inc.	Robert Friberg	B-5736	12/31/2011	Moved to WTC HUB 4/10/2010
Grove RT600E	Mobile Crane	Vesey Street	PANYNJ	3956	2/1/2011	Collavino Constructio n Co.	228738	2008	P-374	105'	29' (Stowed)	50 Ton	N/R			10/08/09	07/16/11	Tishman Construction Co.	Collavino Construction Co.	Idle	Idle	Idle	Removed from WTC site

Make and Model	Type	Location	Jurisdiction	NYCDOB CD #	CD Date Expiration	Owner / Vendor	Serial #	Year	Prototype No	Boom Length	Jib	Lift Capacity	NYCDOB CN #	CN # Date of Issuance	Annual Inspection Date	Date on Site	Date off Site	Contractor	Sub	Operator	License	License Exp Date	Actions Required or Comments
Tandano TR450XL-4	Mobile Crane	East/West Connector	PANYNJ	3842	8/22/2010	Bay Crane	540472	2007	P-382	108'	50' (Stowed)	45 Ton	Filed w/ PANYNJ			12/5/2010	3/2/2010	Tishman Construction Co.	Collavino Construction Co.	Nicholas Urzia	C1-9296	9/30/2011	Removed from WTC Site
Manitowoc 777	Crawler-Mounted Lattice Boom	Building 1 East Side	PANYNJ	2945	See Comment 2/13/11	Bay Crane	7771087	2000	P-325	220'	80'	200Ton	Filed w/ PANYNJ			2/13/2010	8/30/2010	Tishman Construction Co.	Collavino Construction Co.	Idle	Idle	Idle	Removed fromWTC Site
Demag AC 500-1	Hydraulic Truck Mounted	West Street Haul Rd	PANYNJ	3389	9/26/2009	New York Crane	84095	2003	P-433	184'	NA	550 Ton	Filed w/ PANYNJ			04/10/10	04/13/10	Tishman Construction Co.	DCM Erectors, Inc.	Kevin Ackerman	B- 7736	10/31/2011	Removed from WTC Site
Tandano TR450XL-4	Mobile Crane	West Haul Rd	PANYNJ	3299	1/23/2011	Bay Crane	540330	2003	P-382	108'	50' (Stowed)	45 Ton	Filed w/ PANYNJ			5/15/2010	5/17/2010	New York Concrete	New York Concrete	Robert Friberg	B-5736	12/31/2011	Removed from WTC site
Tandano TR450XL-4	Mobile Crane	307' deck south	PANYNJ	3390	9.25.10	Bay Crane	540354	2003	P-382	108'	50' (Stowed)	45 Ton	N/R			7/30/2010	8.3.10	Tishman Construction Co.	Collavino Construction Co.	Idle	Idle	Idle	Crane back on Memorial
Tandano TR450XL-4	Mobile Crane	E-W Connector	PANYNJ	3593	8.23.10	Bay Crane	540390	2005	P-382	108'	50' (Stowed)	45 Ton	N/R			8.3.10	8/28/2010	Tishman Construction Co.	Collavino Construction Co.	Kevin McPaul	B-5779	10/31/2011	Removed from WTC Site
FAVCO STD-1500	Tower-Mounted Lattice Boom	WTC-1 Northwest Corner	[redacted]	2880	8/20/2011	Federated Equipment Co.	351	1971	P-182	130'	NA	106 Ton	Filed w/ PANYNJ			8/30/2010		Tishman Construction Co.	Collavino Construction Co.	Thomas Gordon	B-9224	6/30/2012	Inspected 2.17.12 21st Jump on 2/8/2012 to elev. 1313
Liebher 1250	Mobile Crane	Vesey St	NYC Waiver	3555	4.4.11	Bay Crane	70847	2005	414	119	375	300 Ton	Filed w/NYC waiver			10.9.10	10.9.10	Tishman Construction Co.	Atlantic	Charles Keenan	181	Master Rigger	Removed from WTC Site
Fassi	Knuckle boom	WTC-1 North Core	[redacted]	N/A	7/8/2011	Collovino	1597	2009	F800BXP	100'	N/A	22 Ton	Filed w/ PANYNJ			10.9.09		Tishman Construction Co.	Collavino Construction Co.	John Scaffner	B-9227	11/30/2014	OSHA Inspection
Fassi	Knuckle boom	WTC-1 South Core	[redacted]	N/A	7/8/2011	Collovino	1596	2009	F800BXP	100'	N/A	22 Ton	Filed w/ PANYNJ			10.9.09		Tishman Construction Co.	Collavino Construction Co.	James Antretter	C1-9921	12/30/2014	OSHA Inspection
Valla 25 E	25E-Electric	WTC 1	[redacted]	NA	7.19.11	Valla	9015	2010			N/A	2.25 ton	Filed w/ PANYNJ			11.24.10		Tishman Construction Co.	Benson Industries	Crew	N/A	N/A	OSHA Inspection
Valla 25 E	25E-Electric	WTC 1	[redacted]	NA	7.19.11	Valla	9016	2010			N/A	2.25 ton	Filed w/ PANYNJ			11.24.10		Tishman Construction Co.	Benson Industries	Crew	N/A	N/A	OSHA Inspection
Tandano TR450XL-4	Mobile Crane	Fulton Street	PANYNJ	3756	1/12/2011	Bay Crane	540444	2007	P-382	108'	50' (Stowed)	45 Ton	Filed w/ PANYNJ			6/11/2011	1/10/2012	Tishman Construction Co.	Collavino Construction Co.	Robert Friberg	B-5736	12/31/2011	Removed from WTC Site
NS11M&M	NS11M&M	NS11M&M	NS11M&M	NS11M&M	NS11M&M	NS11M&M	NS11M&M	NS11M&M	NS11M&M	NS11M&M	NS11M&M	NS11M&M	NS11M&M	NS11M&M	NS11M&M	NS11M&M	NS11M&M	NS11M&M	NS11M&M	NS11M&M	NS11M&M	NS11M&M	NS11M&M
Grove RT635C	Mobile Crane	West Street Haul Rd	PANYNJ (NYS)	2786	4/18/2009	EE Cruz	87942	1998	P-295	105'	N/A	35 Ton	N/R			11/26/07	12/04/08	EE Cruz	NA	Paul Gay	C1-6808	3/31/2009	Removed from WTC Site
Liebherr LR1130	Crawler-Mounted Lattice Boom	West Bathtub	PANYNJ	3685	Filed with NYCDOB Confirmation dated [illegible]	Cranes Inc	137030	2006	P-467	154'-5"	258'	151 Ton	Need PANYNJ Filing		1/3/2008	11/28/07	10/09/08	Bovis Lend Lease	EE Cruz	Steven Truzzolino (Day) Thomas J. Oswald (Night)	A- 7398 A- 7063	2/28/09 2/28/09	Removed from WTC Site
Liebherr HS-855HD	Crawler-Mounted Lattice Boom	West Street Haul Road	PANYNJ (NYS)	3959	Filed with NYCDOB Confirmation dated 8/27/08	EE Cruz	184563	2005	P-444	146'	N/A	115 Ton	Filed w/ PANYNJ	3/13/2008	5/2/2008	10/26/2007	2/20/2009	Bovis Lend Lease	EE Cruz	Thomas McWalters	A-9125	3/31/2009	Moved from Memorial to VSC
Tadano TR450XL-4	Mobile Crane	West Bathtub	PANYNJ	3912	12/5/2008	EE Cruz	540395	2005	P-382	106'	50 (Stowed)	45 Ton	Filed w/ PANYNJ	4/1/2008	3/13/2008	3/12/2008	11/7/2008	Bovis Lend Lease	Nicholson / EE Cruz	Donald Yengle	C1-9002	11/30/2008	Removed from WTC Site
Liebherr LTM 1130-5.1	Truck Mounted Telescoping Boom	West Bathtub	PANYNJ	3896	11/9/2008	Bay Crane	65950	2007	P-488	197	108 (Stowed)	143 Ton	Filed w/ PANYNJ	9/2/2008		9/2/2008	9/24/2008	Cornell	N/A	Dominick Milone	B-9407	4/30/2009	Removed from WTC Site
Liebheer LTM1090-4.1	Hydraulic Truck Mounted	West Bathtub	PANYNJ	4035	8/20/2009	Bay Crane	62026	2008	P462	164	62 (Stowed)	110 Ton	Filed w/ PANYNJ	10/3/2008	10/3/2008	10/7/2008	11/21/2008	Bovis Lend Lease	EE Cruz	Steven Truzzolino	A- 7398	2/28/2009	Removed from WTC Site
Tadano TR450XL-4	Mobile Crane	West Haul Rd	PANYNJ (NYS)	3633	1/10/2009	Bay Crane	540405	2006	P-382	108.3'	50 (Stowed)	45 Ton	Filed w/ PANYNJ			10/28/08	12/12/08	Bovis Lend Lease	EE Cruz	Thomas McWalters	A 9125	3/31/2009	Moved from West Haul Rd to VSC

Make and Model	Type	Location	Jurisdiction	NYCDOB CD #	CD Date Expiration	Owner / Vendor	Serial #	Year	Prototype No	Boom Length	Jib	Lift Capacity	NYCDOB CN #	CN # Date of Issuance	Annual Inspection Date	Date on Site	Date off Site	Contractor	Sub	Operator	License	License Exp Date	Actions Required or Comments
Tadano TR450XL-4 Blue	Mobile Crane	West Street Haul Road	PANYNJ (NYS)	3702	9/22/2009	EE Cruz	540396	2005	P-382	106'	50' (Stowed)	45 Ton	N/R		10/28/2008	11/7/2008		Bovis Lend Lease	Nicholson / EE Cruz	Paul Gay	C1-6808	3/31/2009	Moved from West Haul Rd to VSC
Liebherr LR-1300	Crawler-Mounted Lattice Boom	West Bathtub (South / Crane # 2)	PANYNJ	3839	8/17/2009	Bay Crane	138-016	2007	P481	233'	NA	330 Ton	Filed w/PANYNJ	11/29/2008		11/24/2008	4/16/2009	Bovis Lend Lease	Cornell	Thomas Maddaloni	B-5763	7/31/2009	Removed from WTC Site
Grove GML 4100	Hydraulic Truck Mounted		PANYNJ	2917	12/28/2008		40808302	1999	P326	141	42 (Stowed)	100 Ton	Filed w/PANYNJ			12/3/2008	12/5/2008	Bovis Lend Lease	Cornell	Robert Vonsee			Removed from WTC Site
Grove GML 4100	Hydraulic Truck Mounted	West Bathtub	PANYNJ	3102	6/14/2009		40808273	1998	P326	141	42 (Stowed)	100 Ton	Filed w/PANYNJ			12/6/2008	12/8/2008	Bovis Lend Lease	Cornell	Richard Vergona	B-9213	7/3//09	Removed from WTC Site
Liebherr LR-1300	Crawler-Mounted Lattice Boom	West Bathtub (North / Crane #1)	PANYNJ	3813	8/31/2009	Bay Crane	138-007	2007	P481	184'	46'	330 Ton	Filed w/PANYNJ	11/29/2008		11/24/2008	7/17/2009	Bovis Lend Lease	Cornell	Idle	Idle	Idle	Removed from WTC Site
Liebherr LTM1090-2	Hydraulic Truck Mounted	West Haul Rd	PANYNJ (NYS)	3674	7/6/2009	Bay Crane	61839	2006	P462	164	62 (Stowed)	110 Ton	Filed w/ PANYNJ			12/12/2008	12/12/2008	Bovis Lend Lease	EE Cruz	Owen James	B-6714	8/31/2011	Removed from WTC Site
Tadano TR450XL-4	Mobile Crane	West Haul Rd	PANYNJ (NYS)	3633	1/10/2009	Bay Crane	540405	2006	P-382	108.3'	50 (Stowed)	45 Ton	Filed w/ PANYNJ			12/15/08	01/28/09	Bovis Lend Lease	EE Cruz	Steven Truzzolino	A- 7398	2/28/2009	Removed from WTC Site
Tadano TR450XL-4 Green	Mobile Crane	West Street Haul Rd	PANYNJ	3912	12/5/2009	EE Cruz	540395	2005	P-382	106'	50' (Stowed)	45 Ton	N/R			2/18/2009		Bovis Lend Lease	Nicholson / EE Cruz	Idle	Idle	Idle	Removed from WTC Site
Grove RT635C	Mobile Crane	West St Haul Rd	PANYNJ (NYS)	4002	Filed with NYCDOB Confirmation dated 5/12/09	EE Cruz	87944	1998	P-298	105'	29' (Stowed)	35 Ton	N/R			03/04/09		Bovis Lend Lease	EE Cruz	Paul Gay (1st) Domenic DiBerardino (2nd)	C1-6808 C1-9699	3/31/2012 6/30/2009	Removed from WTC Site
Tadano TR450XL-4 Blue	Mobile Crane	West Street Haul Road	PANYNJ (NYS)	3702	9/22/2009	EE Cruz	540396	2005	P-382	106'	50' (Stowed)	45 Ton	N/R		10/28/2008	11/7/2008	4/29/2009	Bovis Lend Lease	Nicholson / EE Cruz	Paul Gay	C1-6808	3/31/2012	Removed from WTC Site
Tadano TR450XL-4	Mobile Crane	West Street Haul Road	PANYNJ (NYS)			Bay Crane			P382	108.3'	50 (Stowed)	45 Ton	N/R			4/25/2009	4/25/2009	Bovis Lend Lease	Navilus				Removed from WTC Site
Liebherr LR 1100	Crawler-Mounted Lattice Boom	West Street Haul Rd	PANYNJ (NYS)	4041	9/2/2009	Bay Crane	133.093	2008	P444	144'	NA	100 Ton	Filed w/ PANYNJ	4/25/2009		4/25/2009	7/25/2009	Bovis Lend Lease	Navilus	Danial Noesges Jr	A-9522	11/30/2011	Removed from WTC Site
Tadano TR450XL-4 Green	Mobile Crane	West Street Haul Rd	PANYNJ	3912	12/5/2009	EE Cruz	540395	2005	P-382	106'	50' (Stowed)	45 Ton	N/R			5/21/2009		Bovis Lend Lease	EE Cruz	Idle	Idle	Idle	Moved from West Haul Rd to HUB 6/15/09
Liebherr LR-1200	Crawler-Mounted Lattice Boom	West Street Haul Rd	PANYNJ	4106	2/27/2010	Bay Crane	135093	2009	P-468	184'	NA	219 Ton	Filed w/PANYNJ	5/16/2009		6/27/2009	6/12/2009	Bovis Lend Lease	Cornell	Thomas Maddaloni	B-5763	7/31/2012	Removed from WTC Site
Tadano TR450XL-4 Green	Mobile Crane	Liberty Street	PANYNJ	4101	2/20/2010	EE Cruz	540576	2009	P-382	108'	50' (Stowed)	45 Ton	N/R			7/15/2009	9/14/2009	Bovis Lend Lease	EE Cruz	Thomas McWalters	A-9125	3/31/2012	Removed from WTC Site
Tadano TR450XL-4	Mobile Crane	West Bathtub	PANYNJ	3756	1/12/2010	Bay Crane	540444	2007	P-382	108.3'	50' (Stowed)	45 Ton	NR			7/20/2009	7/24/2009	Bovis Lend Lease	Cornell	Joe Capo	A-9449	2/28/2010	Removed from WTC Site
Tandano TR450XL-4	Mobile Crane	307' deck south	PANYNJ	3390	9.25.10	Bay Crane	540354	2003	P-382	108'	50' (Stowed)	45 Ton	N/R			7/25/2009	7/30/2010	Bovis Lend Lease	Navilus	Danial Noesges Jr	A-9522	11/30/2011	Removed from Memorial Site to WTC-1 Site
Tadano TR450XL-4 Green	Mobile Crane	East Bathtub On MTA 179 Box	PANYNJ	3912	12/5/2009	EE Cruz & Co	540395	2005	P-382	106'	NA	45 Ton	NR			8/10/2009	8/14/2009	Bovis Lend Lease	Nicholson / EE Cruz	Brooks Backof	C1-9581	7/31/2012	Removed from WTC Site

Make and Model	Type	Location	Jurisdiction	NYCDOB CD #	CD Date Expiration	Owner / Vendor	Serial #	Year	Prototype No	Boom Length	Jib	Lift Capacity	NYCDOB CN #	CN # Date of Issuance	Annual Inspection Date	Date on Site	Date off Site	Contractor	Sub	Operator	License	License Exp Date	Actions Required or Comments
Grove AP-308	Mobile Crane (Carry Deck)	West Bathtub	PANYNJ	2369		Bay Crane	74007	1990	P225	24'	15.7' (Stowed)	8.5 Ton	NR			8/20/2009	9/24/2009	Bovis Lend Lease	Navitus	Idle	Idle	Idle	Removed from WTC Site
Liebheer LTM 1500	Hydraulic Truck Mounted	West Street Haul Rd	PANYNJ	4061	10/29/2008	Bay Crane	73199	2008	P399	276'	299' (Stowed)	600 ton	Filed w/PANYNJ	8/24/2009		8/24/2009	8/24/2009	Bovis Lend Lease	Cornell	James Bartell	B-5771	9/30/2011	Removed from WTC Site
Liebherr LTM 1090	Hydraulic Truck Mounted	Liberty Street	PANYNJ	4016	7/25/2010	Bay Crane	62023	2008	P-462	110'	62'(Stowed)	110 Ton	Filed w/PANYNJ			9/4/2009	9/7/2009	Bovis Lend Lease	Cornell	Roy Petrullo	B-5726	3/31/2012	Removed from WTC Site
Tandano TR450XL-4	Mobile Crane	West Street Haul Rd	PANYNJ	3475	7/19/2010	Bay Crane	540366	2004	P-382	108'	50' (Stowed)	45 Ton	Filed w/ PANYNJ			9/17/2009	9/18/2009	Bovis Lend Lease	Cornell	Joe Felice	C1-7378	12/31/2011	Removed from WTC Site
Liebherr LR-1300	Crawler-Mounted Lattice Boom	West Street Haul Rd	PANYNJ	3839	8/17/2010	Bay Crane	138-015	2007	P481	85'	184'	330 Ton	Filed w/PANYNJ			9/19/2009	11/21/2009	Bovis Lend Lease	Cornell	Thomas Maddaloni	B-5763	7/31/2012	Removed from WTC Site
Liebherr LTM 1090	Truck Mounted Telescoping Boom	Liberty Street	PANYNJ	3674	7/6/2010	Bay Crane	61839	2006	P-462	164'	62' (Stowed)	110 Ton	Filed w/PANYNJ			10/31/2009	10/31/2009	Bovis Lend Lease	Cornell	Owen James	B-6714	8/31/2011	Removed from WTC Site
Tandano TR450XL-4	Mobile Crane	West Street Haul Rd	PANYNJ	4073	11/21/2010	Bay Crane	540565	2009	P-382	108'	50' (Stowed)	45 Ton	Filed w/ PANYNJ	11/30/2009		11/30/2009	12/9/2009	Bovis Lend Lease	Cornell	Joe Felice	C1-7378	12/31/2011	Removed from WTC Site
Tandano TR450XL-4	Mobile Crane	307' deck north	PANYNJ	3299	1/23/2010	Bay Crane	540330	2002	P-382	108'	50' (Stowed)	45 Ton	Filed w/ PANYNJ			3/2/2010	3/3/2010	KSW/5-Star	KSW/5-Star	Joe Felice	C1-7378	12/31/2011	Removed from WTC Site
Tandano TR450XL-4	Mobile Crane	307' deck south	PANYNJ	3390	9.25.10	Bay Crane	540354	2003	P-382	108'	50' (Stowed)	45 Ton	N/R			8/3/2010	9/15/2010	Bovis Lend Lease	Navitus	Brian Nolan	B-9047	6/30/2012	Removed from WTC Site
Liebherr LTM 1220	Hydraulic Truck Mounted	307' deck North	PANYNJ	3548	3/9/2011	Bay Crane	70224	2005	P-449	197	141	338	Filed w/ PANYNJ			8/28/2010	8/29/2010	Bovis Lend Lease		Mark Jones	B-9328	9/30/2011	Removed fromWTC Site
Liebherr LTM 1220	Hydraulic Truck Mounted	307' Deck North North Pool	PANYNJ	4086	12/29/2010	Bay Crane	70465	2009	P-449	197	141	235 Ton	Filed w/ PANYNJ			10/2/2010	10/2/2010	Bovis Lend Lease		Richard Vergona	B-9213	7/31/2012	Removed fromWTC Site
Liebherr LTM 1250/1	Hydraulic Truck Mounted	307' Deck North North Pool	PANYNJ	3555	4/4/2011	Bay Crane	70647	2005	P-414	236'	375'	300 Ton	Filed w/ PANYNJ			10/9/2010	10/9/2010	Bovis Lend Lease		Richard Vergona	B-9213	7/31/2012	Removed fromWTC Site
Liebherr LTM 1200	Hydraulic Truck Mounted	307' Deck North North Pool	PANYNJ	3396	10/10/2011	Bay Crane	70029	2001	P 406	197	72	240 ton	Filed w/ PANYNJ			10.20.10	10.20.10	Bovis Lend Lease		Todd Hoyle	B 8084	3.31.12	Removed fromWTC Site
Liebherr LTM 1250/1	Hydraulic Truck Mounted	307' Deck South Pool Area	PANYNJ	3400	10/28/2010	Bay Crane	2003	70561	P414	236'	230'	300 ton	Filed w/ PANYNJ			10/23/2010	10/28/2010	Bovis Lend Lease		Robert Bernardo	B-5965	12/31/2011	Removed from WTC Site
Linkbelt RTC 8040 II	Link Belt	307' Deck South Pool Area	PANYNJ	2986	7.25.11	Cranes Inc	2000	F7JO-3286	341	133'	156'	40 tons	Filed w/ PANYNJ			9.27.10	9.27.10	Bovis Lend Lease					Removed from WTC Site
Liebherr 1130 5.1	LTM 1130	307' Deck South Pool Area	PANYNJ	3926	1.2.11	Bay Crane	2007	65970	P-488	84'	84'	143 tons	Filed w/ PANYNJ			11.1.10	11.1.10	Bovis Lend Lease					Removed from WTC Site
Liebheer LTM 1090	Hydraulic Truck Mounted	307 Deck West Pavilion	PANYNJ	4035	8/20/2011	Bay Crane	62026	2008	P462	164'	34' (In Use)	110 Ton	Filed w/ PANYNJ			11/22/2010	11/24/2011	Bovis Lend Lease	W&W Steel	Todd Hoyle	B-8084	3/31/2012	Removed from WTC Site

Make and Model	Type	Location	Jurisdiction	NYCDOB CD #	CD Date Expiration	Owner / Vendor	Serial #	Year	Prototype No	Boom Length	Jib	Lift Capacity	NYCDOB CN #	CN # Date of Issuance	Annual Inspection Date	Date on Site	Date off Site	Contractor	Sub	Operator	License	License Exp Date	Actions Required or Comments
Liebheer LTM 1095-5.1	Hydraulic Truck Mounted	Fulton Street	PANYNJ	3592	8/9/2011	Cranes Inc	62509	2005	P457	190+23'	62'	102.5 Ton	Filed w/ PANYNJ			12/1/2010	12/1/2010	Bovis Lend Lease		Dave Jaklitsch	B-9517	10/31/2011	Removed from WTC site
Liebherr LTM 1250/1	Hydraulic Truck Mounted	307' Deck South Pool Area	PANYNJ	3400	10/28/2011	Bay Crane	2003	70561	P414	236'	230'	300 Ton	Filed w/ PANYNJ			12/7/2010	12/11/2010	Bovis Lend Lease		Robert Bernardo	B-5965	12/31/2011	Removed fromWTC Site
Liebherr LTM 1250/1	Hydraulic Truck Mounted	307' Deck South Pool Area	PANYNJ	3400	10/28/2011	Bay Crane	2003	70561	P414	238'	230'	300 ton	Filed w/ PANYNJ			12/13/2010	12/16/2010	Bovis Lend Lease		James Bartell	B-5771	9/30/2011	Removed from WTC Site
LinkBelt RTC-8040	Mobile Crane	307 Deck West Pavilion	PANYNJ	2988	7/25/2011	Crane Inc	2000	SJ0-3285	P341	105	51'	40 Ton	Filed w/ PANYNJ			12/10/2010	4/16/2011	Bovis Lend Lease		Roger F Manley	A-9270	1/31/2012	Removed fromWTC Site
Liebherr LTM 1220	Hydraulic Truck Mounted	307' Deck West South Pool	PANYNJ	3548	3/9/2011	Bay Crane	700224	2008	P-449	197	141	235 Ton	Filed w/ PANYNJ			12/22/2010	12/22/2010	Bovis Lend Lease		Todd Hoyle	B-8084	3/31/2012	Removed fromWTC Site
National BAY 880C	Hydraulic Boom Truck	307 Deck North Pool	PANYNJ	3371	7/29/2011	Bay Crane	30644	2000	P-279	80'	40' (Stowed)	21 Ton	Filed w/ PANYNJ			1/4/2011	1/6/2011	Bovis Lend Lease		Roy Petrullo	B-5726	3/31/2012	Removed from WTC Site
Tadano TR450XL-4	Mobile Crane	307 Deck West Pavilion	PANYNJ	3636	12/22/2011	Bay Crane	540399	2005	P-382	108.3	50' (Stowed)	45 Ton	Filed w/ PANYNJ			1/24/2011	4/16/2011	Bovis Lend Lease	W&W Glass	Tranell Franois	A-9346	3/31/2012	Removed fromWTC Site
Liebherr LTM 1090.4.1	Hydraulic Truck Mounted	307' Deck West of North Pool	PANYNJ	3668	5/30/2011	Bay Crane	2008	61831	P462	164'	62' (Stowed)	110 ton	Filed w/ PANYNJ			3/23/2011	3/28/2011	Bovis Lend Lease		Todd Hoyle	B-8084	3/31/0210	Removed fromWTC Site
Liebherr LTM 1090	Hydraulic Truck Mounted	West Haul Rd	PANYNJ	4016	7/25/2011	Bay Crane	2008	62023	P462	164'	62' (Stowed)	110 ton	Filed w/ PANYNJ			4/14/2011	4/21/2011	Bovis Lend Lease		Tim Scully	A-9396	9/30/2011	Removed fromWTC Site
Liebheer LTM 1090	Hydraulic Truck Mounted	West Haul Rd	PANYNJ	4035	8/20/2011	Bay Crane	62026	2008	P462	164'	34' (Stowed)	110 Ton	Filed w/ PANYNJ			5/3/2011	8.4.11	Bovis Lend Lease		John Franciosa	B-9402	9/30/2012	Removed from WTC Site
Tadano TR450XL-4	Mobile Crane	West Haul Rd	PANYNJ	3693	8/23/2011	Bay Crane	540390	2008	P-382	108'	50' (Stowed)	45 Ton	Filed w/ PANYNJ			5/13/2011	5/14/2011	Bovis Lend Lease		Paul Maloc	C1-7362	11/20/2011	Removed from WTC Site
Tadano TR150XL-4	Mobile Crane	East Bathtub Building 3	PANYNJ	4177	11/23/2010	Bay Crane	FD1125	2077	P459	78'	18' (Stowed)	15 Ton	Filed w/PANYNJ			5/31/2011	6/2/2011	Bovis Lend Lease	WW Glass	Robert Bernardo	C1- 9783	5/13/2012	Removed from WTC Site
Liebheer LTM 1090	Hydraulic Truck Mounted	West Haul Rd	PANYNJ	4323	8/20/2011	Bay Crane	62021	2008	P462	214'	62' (Stowed)	110 Ton	Filed w/ PANYNJ			5/31/2011	7/13/2011	Bovis Lend Lease		Richard Vergona	B-9213	7/31/2012	Removed from WTC Site
Grove GML 4100	Hydraulic Truck Mounted	West Haul Rd	PANYNJ	2917	12/26/1907	Bay Crane	40808302	1999	P326	141'	42 (Stowed)	100 Ton	Filed w/PANYNJ			6/27/2011	6/29/2011	Bovis Lend Lease		Mark Filon	B-5738	4/30/2012	Removed from WTC Site
Liebheer LTM 1350-6.1	Hydraulic Truck Mounted	West Haul Rd	PANYNJ	4326	comments	Bay Crane	71288	2011		241	258 (Stowed)	400 Ton	Filed w/PANYNJ			6/11/2011	8.4.11	Bovis Lend Lease	R Baker	Dominick Milone	B-7829	3/31/2012	Removed from WTC Site
Tadano TR450XL-4	Mobile Crane	Liberty Street	PANYNJ	3842	11/22/2011	Bay Crane	540472	2007	P-382	108'	50' (Stowed)	45 Ton	Filed w/ PANYNJ			8/25/2011	8/25/2011	Bovis Lend Lease		Mark Filon	B-5738	4/30/2012	Removed from WTC Site
Towers 3 & 4	Towers 3 & 4	Towers 3 & 4	Towers 3 & 4	Towers 3 & 4	Towers 3 & 4	Towers 3 & 4	Towers 3 & 4	Towers 3 & 4	Towers 3 & 4	Towers 3 & 4	Towers 3 & 4	Towers 3 & 4	Towers 3 & 4	Towers 3 & 4	Towers 3 & 4	Towers 3 & 4	Towers 3 & 4	Towers 3 & 4	Towers 3 & 4	Towers 3 & 4	Towers 3 & 4	Towers 3 & 4	Towers 3 & 4
Manitowoc 888 Series 2	Crawler-Mounted Lattice Boom	Church & Liberty Streets	NYCDOB	3047	1/22/2009	Yonkers Contracting Co.	8881176	1999	P-300	180'	N/A	220.5 Ton	225-08	3/14/2008		03/15/08	11/08/08	Tishman Construction Co.	Yonkers Contracting	Michael Hand	A-9127	3/31/2009	Removed from WTC Site
Manitowoc 4100W Series 2	Crawler-Mounted Lattice Boom	Church Street	NYCDOB	2480	1/17/2010	Yonkers Contracting Co.	41466	1988	P-127	130'	N/A	150 Ton	230-08	3/24/2008		03/24/08	07/11/09	Tishman Construction Co.	Yonkers Contracting	Danny Dunn	A-5956	8/31/2011	Removed from WTC Site

Make and Model	Type	Location	Jurisdiction	NYCDOB CD #	CD Date Expiration	Owner / Vendor	Serial #	Year	Prototype No	Boom Length	Jib	Lift Capacity	NYCDOB CN #	CN # Date of Issuance	Annual Inspection Date	Date on Site	Date off Site	Contractor	Sub	Operator	License	License Exp Date	Actions Required or Comments
Liebherr LTM 1400	Truck Mounted Telescoping Boom	Church & Liberty Streets	NYCDOB	2803	1/5/2009	Bay Crane	114601	1998	P-311	289	N/A	480 Ton	986-08	11/7/2008		11/7/2008	11/8/2008	Tishman Construction Co.	Yonkers Contracting	Charles Noeth	B-7820	8/31/2011	Removed from WTC Site
Liebherr LTM 1500	Truck Mounted Telescoping Boom	Church & Liberty Streets	NYCDOB	3190	4/29/2009	Bay Crane	73057	2002	P-399	276	N/A	600 Ton	986-08	11/7/2008		11/8/2008	11/8/2008	Tishman Construction Co.	Roger & Son	Christopher Cosban	B 9215	4/30/2009	Removed from WTC Site
Manitowoc 888 Series 2	Crawler-Mounted Lattice Boom	Church & Liberty Streets	NYCDOB	3375	11/13/2009	Vergona	8881273	2001	P-300	130'	110' (Luffing)	230-Ton	986-08	11/7/2008		11/08/08	08/15/09	Tishman Construction Co.	Roger & Son	Gene Merli	B-5637	1/31/0212	Removed from WTC Site
Grove RT600E	Mobile Crane	East Bathtub Building 4	PANYNJ	3749	1/2/2010	Yonkers Contracting Co.	225915	2006	P-374	105'	NA	50 Ton	N/R			11/10/08	04/15/09	Tishman Construction Co.	Yonkers Contracting	Al Narizzano	A-9426	8/3//2011	Removed from WTC Site
Terex RT335/1	Mobile Crane	Church & Liberty Streets	NYCDOB	4037	8/22/2009	New York Crane	16107	2008	P-334	94	49 (Stowed)	35 Ton				1/20/2009	1/20/2009	Tishman Construction Co.	Roger & Son	Garfield Danvers	C1- 6815	11/30/2011	Removed from WTC Site
FAVCO M760D Series 2	Tower-Mounted Lattice Boom	East Bathtub Building 4 (South)	[redacted]	3690	5.7.11 see comments	Federated Equipment Co.	1165	2006	P384	180'	NA	70 Ton	Filed w/ PANYNJ	3/18/2009		3/4/2009		Tishman Construction Co.	DCM Erectors, Inc.	Frederic Bartz	A-9538	10/31/2014	Inspected 2/6/12 24th Jump on 2/7/12 to Elevation 1152'
Liebherr LTM 1220	Truck Mounted Telescoping Boom	Cortlandt Street	NYCDOB	3548	3/9/2010	Bay Crane	70224	2005	P449	197'	141' (Stowed)	235 Ton	230-08	Amended		7/11/2009	7/11/2009	Tishman Construction Co.	Yonkers Contracting	Richard Vergonia	B-9213	7/31/2012	Removed from WTC Site
Linkbelt RTC80100	Mobile Crane	Church Street	NYCDOB	3398	10/15/2010	New York Crane	J7J2-6320	2002	P421	150'	NA	100 Ton	669/09	6/16/2009		9/14/2009	10/30/2009	Tishman Construction Co.	Roger & Son	Robert Lawson	B-7727	6/30/2012	Removed from WTC Site
Terex RT335/1	Mobile Crane	Church Street	PANYNJ	4037	8/22/2010	New York Crane	16107	2008	P334	94'	49 (Stowed)	35 ton	Filed w/PANYNJ	11/25/2009		11/24/2009	5/14/2010	Tishman Construction Co.	Roger & Son	Bernard Stinchcomb	A-9327	6/30/2012	Removed from WTC Site
FAVCO M760E Series 2	Tower-Mounted Lattice Boom	East Bathtub Building 4 (North)	PANYNJ	4193	3.8.11	New York Crane	1437	2008	P-384	173.2'	NA	105 Ton	Filed w/PANYNJ			12/18/2009	1/31/2012	Tishman Construction Co.	DCM Erectors, Inc.	Idle	Idle	Idle	Removed from WTC Site
Linkbelt RTC8050	Mobile Crane	Church Street	PANYNJ	4104	2/27/2012	New York Crane	J6J8-0184	2009	P-518	110'	51' (Stowed)	50 Ton	Filed w/ PANYNJ			5/17/2010	2/24/2010	Tishman Construction Co.	Roger & Son	Idle	Idle	Idle	
Grove RT600E	Mobile Crane	East Bathtub Building 3 Elev 240	PANYNJ	3851	4/3/2011	Liquila	225363	2006	P-374	105	29 (Stowed)	50 Ton	Filed w/PANYNJ			07/24/10	03/07/11	Tishman Construction Co.	Laquila	Atojzy Jastrzab	C1-9899	8/31/2011	Removed from WTC Site
Manitowoc 4100W Series 2	Crawler-Mounted Lattice Boom	East Bathtub Building 3 Elev 240	PANYNJ	2750	5.6.11	Liquila	41917	1998	P-127	170'	NA	200 Ton	Filed w/PANYNJ			07/24/10	04/24/11	Tishman Construction Co.	Laquila	Idle	Idle	Idle	Removed fromWTC Site
Linkbelt RTC8050	Mobile Crane	Church Street	PANYNJ NYCDOB C&D	4104	2/27/2011	New York Crane	J6J8-0184	2009	P-518	110'	NA	50 Ton	669-09			9/24/2010	10/4/2010	Tishman Construction Co.	Roger & Son	Bernard Stinchcomb	A-9327	6/30/2012	Removed from WTC Site
Linkbelt RT335/1	Mobile Crane	Cortlandt Street	PANYNJ NYCDOB C&D	4037	8/22/2011	New York Crane	16107	2008	P-334	94'	49' With 30' in use	35-Ton	Filed w/PANYNJ			10/9/1902	11/8/2010	Tishman Construction Co.	Roger & Son	Tom Oswald	A-7063	2/28/2012	Removed from WTC Site
Grove GMK6220	Hydraulic Truck Mounted	Cortlandt Street	PANYNJ	2941	3/7/2011	New York Crane	6200-9006	2000	P-356	197'	125'	220 Ton	Filed w/PANYNJ			10/23/2010	10/24/2010	Tishman Construction Co.		Matthew Bunora	A-9228	4/30/2012	Removed from WTC Site
Manitowoc 222	Crawler-Mounted Lattice Boom	Church Street	PANYNJ NYCDOB C&D	3665	3.9.11	Vergona Crane Inc	22210881	2001	P-379	75'	120' (Luffing)	100 Ton	668-10			10/28/2010	3/17/2011	Tishman Construction Co.	Roger & Son	Pete Franzoso	B-9264	7/31/2012	Removed from WTC Site

Make and Model	Type	Location	Jurisdiction	NYCDOB CD #	CD Date Expiration	Owner / Vendor	Serial #	Year	Prototype No	Boom Length	Jib	Lift Capacity	NYCDOB CN #	CN # Date of Issuance	Annual Inspection Date	Date on Site	Date off Site	Contractor	Sub	Operator	License	License Exp Date	Actions Required or Comments
Terex RT335/1	Mobile Crane	Church Street	PANYNJ	4037	8/22/2011	New York Crane	16107	2008	P334	94'	49 (Stowed)	35 ton	Filed w/PANYNJ			12/21/2010	12/31/2010	Tishman Construction Co.	Roger & Son	John Frislid	C1-9451	3/31/2012	**Removed from WTC Site**
Terex RT335/1	Mobile Crane	Church Street	PANYNJ	4037	8/22/2011	New York Crane	16107	2008	P334	94'	49 (Stowed)	35 ton	Filed w/PANYNJ			1/14/2011	1/14/2011	Tishman Construction Co.	Roger & Son	John Frislid	C1-9451	3/31/2012	**Removed from WTC Site**
Favco STD-1500	Tower-Mounted Lattice Boom	East Bathtub Building 4 **(East)**	PANYNJ	3450	see comments	DCM Erectors, Inc	100/20	1974	P-132	135'	N/A	87 tons	Filed w PANYNJ			2.18.11	1/30/2012	Tishman Construction Co.	DCM Erectors, Inc	Idle	Idle	Idle	**Removed from WTC Site**
Linkbelt TG 1900	Tower-Mounted Lattice Boom	East Bathtub Building 3 **(EAST)**	[redacted]	3594	7/8/2011	Federated Equipment Co.	76-G9-742C	1979	P249	180	N/A	230 ton	Filed w/PANYNJ			3/4/2011		Tishman Construction Co.	Sobara	Matthew Messinger	B-5469	9/30/2014	**Inspected 12.14.11, elev. 426**
Madea MC285C	Mini- crawler crane	East Bathtub Building 4 **(East)**	[redacted]	4307	3.31.12	Roger's & Sons	P00915	2010	MC285C	28.1	NA	3.1 tons	Filed w/PANYNJ			4/8/2011		Tishman Construction Co.	Benson	Roger Manley	A-9270	1/31/2012	
Tadano TR150XL-4	Mobile Crane	East Bathtub Building 3	PANYNJ	3600	9/13/2011	Bay Crane	FD0825	2005	P459	78'	18' (Stowed)	15 Ton	Filed w/PANYNJ			4/14/2011	6/22/2011	Tishman Construction Co.	Sorbara	Robert Gray	B-5622	10/31/2011	**Removed from WTC Site**
Valla 25 E	*25E-Electric*	*T-4*	[redacted]	*NA*	*7/8/2011*	*Valla*	*9038*	*2011*			*N/A*	*2.25 ton*	Filed w/ PANYNJ			*5/4/2011*		Tishman Construction Co.	Benson Industries	*Idle*	*Idle*	*Idle*	***OSHA Inspection***
Demag AC55	Mobile Crane	Liberty Street	PANYNJ	3977	4.16.12	Bay Crane	15018	2005	P-498	131.5'	66.3' (Stowed)	65 Ton	Filed w/ PANYNJ			5/28/2011		Tishman Construction Co.	Benson Industries	Robert VonSee	B-9212	7/30/2010	**Removed from WTC Site**
Demag AC55	Mobile Crane	Liberty Street	PANYNJ	3998	5/6/2012	Bay Crane	15086	2008	P-498	131.5'	66.3' (Stowed)	65 Ton	Filed w/ PANYNJ			6/4/2011	6/4/2011	Tishman Construction Co.	Benson Industries	Robert VonSee	B-9212	7/30/2010	**Removed from WTC Site**
Demag AC55	Mobile Crane	Liberty Street	PANYNJ	3998	5/6/2012	Bay Crane	15086	2008	P-498	131.5'	66.3' (Stowed)	65 Ton	Filed w/ PANYNJ			6/7/2011	6/13/2011	Tishman Construction Co.	Benson Industries	Robert VonSee	B-9212	7/30/2010	**Removed from WTC Site**
Demag AC55	Mobile Crane	Liberty Street	PANYNJ	3998	5/6/2012	Bay Crane	15086	2008	P-498	131.5'	66.3' (Stowed)	65 Ton	Filed w/ PANYNJ			6/18/2011	6/18/2011	Tishman Construction Co.	Benson Industries	Robert VonSee	B-9212	7/30/2010	**Removed from WTC Site**
Linkbelt RTC8040II	Mobile Crane	Cortlandt Street	PANYNJ	2924	1/18/2010	New York Crane	F7JD-309	2000	P341	105	67 (Stowed	40 Ton	Filed w/PANYNJ			6/22/2011	6/22/2011	Tishman Construction Co.	Sorbara	James Piranio	B-5703	11/30/2011	**Removed from WTC Site**
DeMag AC500-1	Hydraulic Truck Mounted	Cortlandt Street	PANYNJ	3389	9/26/2011	New York Crane	84095	2003		184	295 (Stowed)	551 Ton	Filed w/PANYNJ			6/22/2011	6/24/2011	Tishman Construction Co.	Sorbara	Thomas Sullivan	B-9221	4/30/2012	**Removed from WTC Site**
Favco STD-1500	Tower-Mounted Lattice Boom	East Bathtub Building 3 **(WEST)**	[redacted]	3706	SEE COMMENT	Federated Equipment Co.	410	1975	P-132	157'	N/A	87 tons	Filed w/PANYNJ			6/24/2011		Tishman Construction Co.	Sorbara	Robert Gray	B-5622	10/31/2014	**biweekly inspect. required, Load test passed on 7.19.11**
Leo 220v/3PH	Tower-Mounted Monorail	East Side Building 4	PANYNJ	N/A	see comments	Beta Max Hoist					N/A	1 ton	Filed w/PANYNJ			6/8/2011		Tishman Construction Co.	Benson	Idle	Idle	Idle	**Removed**

Make and Model	Type	Location	Jurisdiction	NYCDOB CD #	CD Date Expiration	Owner / Vendor	Serial #	Year	Prototype No	Boom Length	Jib	Lift Capacity	NYCDOB CN #	CN # Date of Issuance	Annual Inspection Date	Date on Site	Date off Site	Contractor	Sub	Operator	License	License Exp Date	Actions Required or Comments
Linkbelt 1900	Tower-Mounted Lattice Boom	East Bathtub Building-4 (2A)	PANYNJ	3705	4.20.12	Federated Equipment Co	76G9-1206C	1979	P-155	160' W/ 10' Fly	NA	115 Ton	Filed w/PANYNJ			1/14/2012	2/18/2012	Tishman Construction Co.	DCM Erectors, Inc.	Idle	Idle	Idle	Removed from WTC Site
Tadano TR-300-XL-4	Mobile Crane	Greenwich Street	PANYNJ	3605	6/26/2012	Bay Crane	560768	2005		102'	42 (Stowed)	30 Ton				2/7/2012	2/8/2012	Tishman Construction Co.	Benson Industries	Richard Hawtin	B-9959	2/28/0214	Removed from WTC site
Tadano TR-300-XL-4	Mobile Crane	Greenwich Street	PANYNJ	3605	6/26/2012	Bay Crane	560768	2005		102'	42 (Stowed)	30 Ton	Filed w/PANYNJ			2/15/2012	2/15/2012	Tishman Construction Co.	Benson Industries	Richard Hawtin	B-9959	2/28/2014	Removed fromWTC Site
Tadano TR-300-XL-4	Mobile Crane	Greenwich Street	PANYNJ	3605	6/26/2012	Bay Crane	560768	2005		102'	42 (Stowed)	30 Ton	Filed w/PANYNJ			2/21/2012	2/21/2012	Tishman Construction Co.	Benson Industries	Richard Hawtin	B-9959	2/28/2014	Removed fromWTC Site
Tadano TR-300-XL-4	Mobile Crane	Greenwich Street	PANYNJ	3605	6/26/2012	Bay Crane	560768	2005		102'	42 (Stowed)	30 Ton	Filed w/PANYNJ			2/29/2012	3/1/2012	Tishman Construction Co.	Benson Industries	Richard Hawtin	B-9959	2/28/2014	Removed fromWTC Site
VSC	VSC	VSC	VSC	VSC	VSC	VSC	VSC	VSC	VSC	VSC	VSC	VSC	VSC	VSC	VSC	VSC	VSC	VSC	VSC	VSC	VSC	VSC	VSC
Tadano TR450XL-4	Mobile Crane	VSC	PANYNJ	3633	1/10/2009	Bay Crane	540405	2006	P-382	108.3'	50 (Stowed)	45 Ton	Filed w/ PANYNJ			10/28/08	12/15/08	EE Cruz	EE Cruz	Thomas McWalters	A 9125	3/31/2009	Removed from VSC to West Haul
Tadano TR450XL-4 Green	Mobile Crane	VSC	PANYNJ	3912	12/5/2009	EE Cruz	540395	2006	P-382	106'	50' (Stowed)	45 Ton	N/R			2/18/2009		Nicholson / EE Cruz	Nicholson / EE Cruz	Thomas McWalters	A-9125	3/31/2009	Removed from VSC to West Haul Rd
Liebherr HS-855HD	Crawler-Mounted Lattice Boom	VSC	PANYNJ	3959	2/19/2010	EE Cruz & Co	184583	2005	P-444	55'	N/A	115 Ton	N/R Clamshell			2/21/2009	12/18/2009	EE Cruz	NA	Walter White	A-9423	8/31/2011	Removed from WTC Site
Tadano TR450XL-4 Blue	Mobile Crane	VSC	PANYNJ (NYS)	3702	9/22/2009	EE Cruz	540396	2005	P-382	106'	50' (Stowed)	45 Ton	N/R		10/28/2008	11/7/2008		EE Cruz	NA	Idle	Idle	Idle	Removed from VSC to West Haul Rd
Manitowoc 777	Crawler-Mounted Lattice Boom	VSC	PANYNJ (NYS)	2932	2/10/2010	Bay Crane	7771088 SERIES 2	2000	P325	130'	NA	200-Ton	Filed w/PANYNJ			3/24/2009	7/30/2009	EE Cruz	NA	Richard Streeter	A-9882	3/31/2012	Removed from WTC Site
Grove RT635C	Mobile Crane	VSC	PANYNJ (NYS)	4002	5/14/2009	EE Cruz	87944	1998	P-296	105'	29' (Stowed)	35 Ton	N/R			03/04/09		EE Cruz	NA	Domenic DiBerardino	C1-9699	6/30/2009	Removed from VSC to West Haul Rd 4/29/09
Liebherr LTM 1200/1	Truck Mounted Telescoping Boom	VSC	PANYNJ	3396	10/10/2009	Bay Crane	70029	2001	P-406	197'	72' (Stowed)	143 Ton	Filed w/ PANYNJ			4/23/2009	4/24/2009	EE Cruz	NA	Todd Hoyle	B-8084	3/31/2012	Removed from WTC Site
Liebherr 1090/4.1	Truck Mounted Telescoping Boom	VSC	PANYNJ	3863	5/30/2009	Bay Crane	61831	2006	P-462	164'	72' (Stowed)	110 Ton	Filed w/ PANYNJ			4/24/2009	4/24/2009	EE Cruz	NA	John Bruno	B-5300	3/31/2012	Removed from WTC Site
Tadano TR450XL-4 Green	Mobile Crane	VSC	PANYNJ	3912	12/5/2009	EE Cruz	540395	2005	P-382	106'	50' (Stowed)	45 Ton	N/R			2/18/2009		EE Cruz	NA	Thomas McWalters	A-9125	3/31/2012	Removed from VSC to West Haul Road 5/21/09
Liebherr LR-1200	Crawler-Mounted Lattice Boom	VSC	PANYNJ	3673	7/6/2010	Bay Crane	135018	2006	P-468	164'	NA	219 Ton	Filed w/PANYNJ	5/22/2009		5/14/2009	4/23/1903	EE Cruz	NA	Steve Mutson	A-9023	9/30/2011	Removed from WTC Site
Grove AP308	Mobile Crane (Carry Deck)	VSC	PANYNJ	3104	6/25/2009	Bay Crane	69688	1989	P225	24'	15.7'(Stowed)	8.5 Ton	N/R			05/21/09	05/22/09	EE Cruz	NA	Thomas McWalters	A-9125	3/31/2012	Removed from WTC Site
Liebherr HS-855HD	Crawler-Mounted Lattice Boom	VSC	PANYNJ	3736	**11/21/2009	Essex Crane Rental Co	184489	2002	P444	78'	NA	100-Ton	N/R Clamshell			8/4/2009	11/24/2009	EE Cruz	NA	William William (Day) Frederic S Bartz(Night)	A-9266 A-9538	7/31/2011 10/31/11	Removed from WTC Site

Make and Model	Type	Location	Jurisdiction	NYCDOB CD #	CD Date Expiration	Owner / Vendor	Serial #	Year	Prototype No	Boom Length	Jib	Lift Capacity	NYCDOB CN #	CN # Date of Issuance	Annual Inspection Date	Date on Site	Date off Site	Contractor	Sub	Operator	License	License Exp Date	Actions Required or Comments
Tadano TR450XL-4 Green	Mobile Crane	VSC	PANYNJ	4102	2/20/2010	EE Cruz	540580	2009	P-382	106'	50' (Stowed)	45 Ton	N/R			12.9.09		EE Cruz	NA				Removed from WTC Site
Tadano TR450XL-4 Green	Mobile Crane	VSC	PANYNJ	3702	2/20/2010	EE Cruz	540396	2005	P-382	106'	50' (Stowed)	45 Ton	N/R			1/20/2010	5/11/2010	EE Cruz	NA	Idle	Idle	Idle	Removed from WTC Site
Tadano TR450XL-4 Green	Mobile Crane	VSC	PANYNJ	3912	2/20/2010	EE Cruz	540395	2009	P-382	106'	50' (Stowed)	45 Ton	N/R			12/9/2009	20/08/2010	EE Cruz	NA	Thomas McWalters	A-9125	3/31/2012	Removed from WTC Site
Mantis 10010	Crawler-Mounted Hydraulic Boom	VSC	PANYNJ	3739	11/22/2010	Roayl Equipment Leasing	100-130	2000	P-364	111.5'	NA	50 Ton	Filed w/ PANYNJ			8/15/2010	1/19/2011	EE Cruz	NA	Danny Nolan	A-7804	4/30/2012	Removed from WTC Site
Tadano TR450XL-4 Green	Mobile Crane	VSC	PANYNJ	4102	2/20/2011	EE Cruz	540580	2009	P-382	106'	50' (Stowed)	45 Ton	Filed w/ PANYNJ			1/3/2011	1/22/2011	EE Cruz	NA	Idle	Idle	Idle	Removed fromWTC Site
Liebherr LTM 1250/1	Hydraulic Truck Mounted	West Street NorthBound	PANYNJ	3555	4/4/2011	Bay Crane	70647	2005	P-414	236'	375'	300 Ton	Filed w/ PANYNJ			1/17/2011	2/19/2011	Yonkers	NA	Richard Vergona	B-9213	7/31/2012	Removed from WTC Site
Manitowoc 888 Series 2	Crawler-Mounted Lattice Boom	VSC Elevation 250	[redacted]	3047	1/22/2012	Yonkers Contracting Co.	8881176-1999	1999	P-300	180'	N/A	220.5 Ton	Filed w/ PANYNJ			02/09/11		Yonkers Contracting	Yonkers Contracting	Nicholas D'Avanzo (Day) James Piranio (Night)	A-7373 B-5703	10/31/2014 11/30/2014	
Grove RT600E	Mobile Crane	VSC Phase-2	PANYNJ	3749	1/2/2011	Yonkers Contracting Co.	225915	2006	P-374	105'	NA	50 Ton	Filed w/ PANYNJ			03/22/11	10/05/11	Yonkers Contracting	Yonkers Contracting	Glen Gomnert	A-7864	3/31/2012	Removed from WTC Site
Liebherr LTM 1250/1	Hydraulic Truck Mounted	West Street NorthBound	PANYNJ	3555	See Comment	Bay Crane	70647	2005	P-414	236'	375'	300 Ton	Filed w/ PANYNJ			4/19/2011	4/25/2011	Yonkers	NA	Rober Taylor	B-5293	7/31/2012	Removed from WTC Site
Kelbeco CK 1000-111	Crawler-Mounted Lattice Boom	VSC Phase-2	PANYNJ	4115	4/1/2012	Mill Company	GH03-02101	2007	P-346	162'	NA	100 Ton	Filed w/ PANYNJ			4/1/2011	7.13.11	Yonkers	Nicholson	Roger Manley (Day)	A-9270	1/31/2012	Removed from WTC Site
Manitowoc 16000	Crawler-Mounted Lattice Boom	VSC Elevation 250	PANYNJ	4133	5/18/2012	DCM Erectors, Inc	1600-1093	2009	P-516	118'	98.4	440 Ton	Filed w/ PANYNJ			10/10/11		W&W Steel	W&W Steel	Ivor Hall	B-7745	6/30/2012	
Tandano TR450XL-4	Mobile Crane	North Access Rd	PANYNJ	3842	8/22/2012	Bay Crane	540472	2007	P-382	108'	50' (Stowed)	45 Ton	Filed w/ PANYNJ			01/18/12		Navillus	Navillus	Tranell Francis	A-9364	3/31/2012	
South Vent Building	South Vent Building	South Vent Building	South Vent Building	South Vent Building	South Vent Building	South Vent Building	South Vent Building	South Vent Building	South Vent Building	South Vent Building	South Vent Building	South Vent Building	South Vent Building	South Vent Building	South Vent Building	South Vent Building	South Vent Building	South Vent Building	South Vent Building	South Vent Building	South Vent Building	South Vent Building	South Vent Building
Liebherr LR-1160	Crawler-Mounted Lattice Boom	West Street Haul Rd	PANYNJ (NYS)	4140	6/5/2011	EE Cruz & Co/ Cornell	134.119	2009	P391	152'	NA	200 Ton	Filed w/PANYNJ			6/16/2009	1/31/2011	EE Cruz & Co/Cornell	NA	John Samet	A-5715	2/28/2012	Removed fromWTC Site
Liebherr 1130 5.1	Hydraulic Truck Mounted	West Street Haul Rd	PANYNJ (NYS)	3926	7/2/2011	Bay Crane	65970	2007	P-488	197'	108' (Stowed)	143 Ton	Filed w/PANYNJ			10/14/2010	11/8/2010	EE Cruz & Co/Cornell	NA	John Franciosa	B-9402	9/30/2012	Removed from WTC Site
Tadano TR450XL-4 Green	Mobile Crane	West Street Haul Rd	PANYNJ	4102	2/20/2011	EE Cruz	540580	2009	P-382	106'	50' (Stowed)	45 Ton	Filed w/ PANYNJ			2/1/2011	2/19/2011	EE Cruz	NA	John Bolts	C1-9646	8/31/2012	Removed fromWTC Site
Tandano TR450XL-4	Mobile Crane	West Street Haul Rd	PANYNJ	3756	2/12/2012	Bay Crane	540444	2007	P-382	108'	50' (Stowed)	45 Ton	Filed w/ PANYNJ			2/22/2011	3/7/2011	EE Cruz	NA	Donald Spano	C1-8027	12/31/2011	Removed from WTC Site
Towers 2	Towers 2	Towers 2	Towers 2	Towers 2	Towers 2	Towers 2	Towers 2	Towers 2	Towers 2	Towers 2	Towers 2	Towers 2	Towers 2	Towers 2	Towers 2	Towers 2	Towers 2	Towers 2	Towers 2	Towers 2	Towers 2	Towers 2	Towers 2
Tandano TR450XL-4	Mobile Crane	Church Street	NYCDOB	3187	4/24/2010	Bay Crane	540316	2002	P-382	108'	50' (Stowed)	45 Ton	Filed w/ PANYNJ			10/26/2009	10/26/2009	Turner	Turner	Joseph Mainieri	B-5517	2/28/2012	Removed from WTC Site

Make and Model	Type	Location	Jurisdiction	NYCDOB CD #	CD Date Expiration	Owner / Vendor	Serial #	Year	Prototype No	Boom Length	Jib	Lift Capacity	NYCDOB CN #	CN # Date of Issuance	Annual Inspection Date	Date on Site	Date off Site	Contractor	Sub	Operator	License	License Exp Date	Actions Required or Comments
Terex RT335/1	Mobile Crane	Church Street	PANYNJ (NYS)	3976	4/15/2011	New York Crane	15674	2008	P334	94'	49' (Stowed)	35 Ton	Filed w/PANYNJ			6/1/2010	4/15/2011	Turner	Turner	Thomas Scardino	A-9348	1/31/2012	Removed from WTC Site
Tadano TR450XL-4	Mobile Crane	East Bathtub Elevation 226	PANYNJ (NYS)	3842		Bay Crane	540472	2007	P-382	108.3'	50'(Stowed)	45 Ton	Filed w/PANYNJ			8/23/2010	12/31/2010	Intercoastal	Turner	Wayne Falion	A-9411	8/31/2011	Removed from WTC Site
Tadano TR450XL-4	Mobile Crane	Church Street	PANYNJ (NYS)	3756	1/12/2011	Bay Crane	540444	2007	P-382	108.3'	50'(Stowed)	45 Ton	Filed w/PANYNJ			12/1/2010	12/2/2010	Intercoastal	Turner	Chad Dobish	C1-7395	2/28/2010	Removed from WTC Site
Linkbelt TG 2300B	Tower-Mounted Lattice Boom	East Bathtub Building 2 (EAST)	[redacted]	4279	12.28.11 see commnets, check on CD	Cornell	76G9-1526B	1979	P249	180	N/A	230 ton	Filed w/PANYNJ			12/19/2010		Turner	Halmar	Timothy O'Connor	B-9419	6/30/2012	Inspected 2.10.12
Linkbelt TG 2300B	Tower-Mounted Lattice Boom	East Bathtub Building 2 (WEST)	PANYNJ	4284	see comments, check on 1.29.11	Cornell	76HO-1058	1980	P249	180	N/A	230 Ton	Filed w/PANYNJ			1/22/2011	12/30/2011	Turner	Falcon	Robert Koch	B-5605	1/31/2012	Removed from WTC Site
Tandano TR450XL-4	Mobile Crane	Church Street	PANYNJ	3756	1/12/2012	Bay Crane	540444	2007	P-382	108'	50' (Stowed)	45 Ton	Filed w/ PANYNJ			4/16/2011	4/20/2011	Turner	Turner	Thomas Scardino	A-9348	1/31/2012	Removed from WTC Site
Terex RT335/1	Mobile Crane	Church Street	PANYNJ (NYS)	3976	4/15/2011	New York Crane	15674	2008	P334	94'	49' (Stowed)	35 Ton	Filed w/PANYNJ			4/21/2011		Turner	Turner	Thomas Scardino	A- 9348	1/31/2012	Removed from WTC Site
Tandano TR450XL-4	Mobile Crane	Church St	[redacted]	3187	4/24/2012	Bay Crane	540316	2002	P-382	108'	50' (Stowed)	45 Ton	Filed w/PANYNJ			7/25/2011		Turner	Turner	Idle	Idle	Idle	
Tandano TR450XL-4	Mobile Crane	Vesey Street	PANYNJ	3811	1/12/2012	Bay Crane	540393	2005	P-382	108'	50' (Stowed)	45 Ton	Filed w/PANYNJ			11/5/2011	11/7/2011	Turner	Five Star	Michael Frobin	A-7999	11/30/2011	Removed from WTC Site
Chiller Plant	Chiller Plant	Chiller Plant	Chiller Plant	Chiller Plant	Chiller Plant	Chiller Plant	Chiller Plant	Chiller Plant	Chiller Plant	Chiller Plant	Chiller Plant	Chiller Plant	Chiller Plant	Chiller Plant	Chiller Plant	Chiller Plant	Chiller Plant	Chiller Plant	Chiller Plant	Chiller Plant	Chiller Plant	Chiller Plant	Chiller Plant
Tandano TR450XL-4	Mobile Crane	307' deck south	PANYNJ	3587	See Comment 4/27/11	Bay Crane	540385	2005	P-382	108'	50' (Stowed)	45 Ton	Filed w/ PANYNJ			1/11/2010	9/25/2010	KSW/5-Star	KSW/5-Star	Idle	Idle	Idle	Removed from WTC Site
Tadano TR150XL-4	Mobile Crane	West Haul Rd	PANYNJ	4056	10/16/2010	North Shore Equip Leasing Co	FD1055	2006	P459	78'	18' (Stowed)	15 Ton	Filed w/ PANYNJ			3/17/2010	3/20/2010	KSW/5-Star	KSW/5-Star	Raymond Keys	A-9561	1/31/2012	Removed from WTC Site
Liebherr LTM 1090	Truck Mounted Telescoping	307' deck south	PANYNJ	3674	7/6/2010	Bay Crane	61839	2006	P462	164'	62' (Stowed)	110 Ton	Filed w/ PANYNJ			6/14/2010	6/18/2010	KSW/5-Star	KSW/5-Star	John Samuel	B-5605	8/31/2012	Removed from WTC Site
9A Underpass	9A Underpass	9A Underpass	9A Underpass	9A Underpass	9A Underpass	9A Underpass	9A Underpass	9A Underpass	9A Underpass	9A Underpass	9A Underpass	9A Underpass	9A Underpass	9A Underpass	9A Underpass	9A Underpass	9A Underpass	9A Underpass	9A Underpass	9A Underpass	9A Underpass	9A Underpass	9A Underpass
Liebherr 1130-5.1	Truck Mounted Telescoping Boom	West Street (Zone3)	PANYNJ (NYS)	3926	1/2/2011	Bay Crane	65970	2007	P-488	197'	108' (Stowed)	143 Ton	Filed w/ PANYNJ			2/17/2010	2/23/2010	Turner	Metropolitan Metals Corp	Mark Jones	B-9328	9/30/2011	Removed from WTC Site
Tandano TR450XL-4	Mobile Crane	West Street (Zone5)	PANYNJ	3410	12.12.10	Bay Crane	540360	2004	P-382	108'	50' (Stowed)	45 Ton	Filed w/ PANYNJ			5/25/2010	6/2/2010	Turner	Urban	Idle	Idle	Idle	Removed from WTC Site
Tandano TR450XL-4	Mobile Crane	West Street (Zone5)	PANYNJ	3585	8/2/2010	Bay Crane	540389	2005	P-382	108'	50' (Stowed)	45 Ton	Filed w/ PANYNJ			5/26/2010	6/23/2010	Turner	Urban	Christopher G Verso	C1-9556	3/31/2012	Removed from WTC Site
Tandano TR450XL-4	Mobile Crane	West Street (Zone5)	PANYNJ	3585	8.2.10	Bay Crane	540369	2005	P-382	108'	50' (Stowed)	45 Ton	Filed w/ PANYNJ			7/8/2010	8.2.10	Turner	Urban	Christopher G Verso	C1-9556	3/31/2012	Removed from WTC Site
Tandano TR450XL-4	Mobile Crane	West Street (Zone5)	PANYNJ	3475	7.19.11	Bay Crane	540366	2004	P-382	108'	50' (Stowed)	45 Ton	Filed w/ PANYNJ			8.2.10	8/17/2010	Turner	Urban	Christopher G Verso	C1-9556	3/31/2012	Removed from WTC Site
Tandano TR450XL-4	Mobile Crane	West Street (Zone5)	PANYNJ (NYS)	3585	8/2/2010	Bay Crane	540389	2005	P-382	108'	50' (Stowed)	45 Ton	Filed w/ PANYNJ			8/17/2010	11/2/2010	Turner	Urban	Christopher G Verso	C1-9556	3/31/2012	Removed fromWTC Site
Liebherr LTM-1220	Hydraulic Truck Mounted	West Street (Zone4/5)	PANYNJ (NYS)	4086	12/29/2010	Bay Crane	70465	2009	P-449	197'	141' (Stowed)	235 Ton	Filed w/ PANYNJ			07/23/10	07/25/10	Turner	Urban	Richard Vergona	B-9213	7/31/2012	Removed from WTC Site

Make and Model	Type	Location	Jurisdiction	NYCDOB CD #	CD Date Expiration	Owner / Vendor	Serial #	Year	Prototype No	Boom Length	Jib	Lift Capacity	NYCDOB CN #	CN # Date of Issuance	Annual Inspection Date	Date on Site	Date off Site	Contractor	Sub	Operator	License	License Exp Date	Actions Required or Comments
Liebherr LR-1200	Crawler-Mounted Lattice Boom	West Street (Zone4/5)	PANYNJ (NYS)	3740	11/22/2011	Bay Crane	135-031	2006	P-468	150'	N/A	270 Ton	Filed w/ PANYNJ			1117/2010	8/19/2011	Turner	Urban	Idle	Idle	Idle	Removed fromWTC Site
Tandano TR450XL-4	Mobile Crane	West Street (Zone1/2)	PANYNJ (NYS)	4073	11/12/2011	Bay Crane	540565	2009	P-382	108'	50' (Stowed)	45 Ton	Filed w/ PANYNJ			5/31/2011	6/3/2011	Turner	Urban	Brooks Backof	A-9581	12/31/2012	Removed fromWTC Site
Tandano TR450XL-4	Mobile Crane	West Street (Zone1/2)	PANYNJ (NYS)	4073	11/12/2011	Bay Crane	540565	2009	P-382	108'	50' (Stowed)	45 Ton	Filed w/ PANYNJ			6/10/2011		Turner	Urban	Brooks Backof	A-9581	12/31/2012	Removed from WTC Site
Tandano TR150XL-4	Mobile Crane	West Street Zone 5	PANYNJ (NYS)	4056	7/15/2009	Bay Crane	FD1055	2006	P459	78'	18(Stower)	15 Ton	Filed w/PANYNJ			8/17/2011	8/18/2011	Turner	Urban	Steve Ellis	C1-9429	6/30/2012	Removed from WTC Site
Liebheer LTM 1300-5.1	Hydraulic Truck Mounted	West Street (Zone4/5)	PANYNJ	3898	11/9/2011	Bay Crane	65950	2007	P-488	197'	108' (Stowed)	143 Ton	Filed w/ PANYNJ			8/19/2011	9/17/2011	Turner	Urban	Michael McClain	B-5883	10/31/2011	Removed from WTC Site
Liebheer LTM 1300-5.1	Hydraulic Truck Mounted	West Street (Zone4/5)	PANYNJ	3926	1/2/2012	Bay Crane	65970	2007	P-488	197'	108' (Stowed)	143 Ton	Filed w/ PANYNJ			8/19/2011	8/19/2011	Turner		Randolph Johnson	B-9170	5/31/2012	Removed from WTC Site
Tandano TR450XL-4	Mobile Crane	West Street (Zone4/5)	PANYNJ (NYS)	3299	1/23/2012	Bay Crane	540330	2002	P-382	108'	50' (Stowed)	45 Ton	Filed w/ PANYNJ			9/17/2011	1/31/2012	Turner	Urban	Steven R Ellis	C1-9885	6/30/2012	Removed from WTC Site
Tadano TR450XL-4	Mobile Crane	West Street (Zone4/5)	PANYNJ (NYS)	3134	9/7/2011	Bay Crane	540319	2001	P-382	108.3'	50 (Stowed)	45 Ton				09/19/11	09/27/11	Turner	Urban	James Paladins	C1-9583	7/31/2014	Removed from WTC Site
Liebherr LTM 1090	Hydraulic Truck Mounted	9A Underpass	PANYNJ	4016	7/25/2012	Bay Crane	2008	62023	P462	164'	62' (Stowed)	110 ton	Filed w/ PANYNJ			9/26/2011	9/27/2011	Turner					Removed fromWTC Site
Liebherr LTM-1220	Hydraulic Truck Mounted	West Street (Zone3/4)	PANYNJ (NYS)	4332	7/14/2012	Bay Crane	94873	2009	P-449	197'	141' (Stowed)	235 Ton	Filed w/ PANYNJ			11/28/11	04/22/03	Turner	Urban	Richard Vergona	B-9213	7/31/2012	Removed from WTC Site
Tandano TR150XL-4	Mobile Crane	West Street Zone 6 Elev	PANYNJ (NYS)	3588	12/13/2011	Bay Crane	FD1055	2006	P459	78'	18(Stower)	15 Ton	Filed w/PANYNJ			10.11.11	12/6/2011	Turner	Urban	Christopher Blake	C1-9791	6/30/2012	Removed from WTC Site

Revisions

Removed from WTC Site

Legend:

NYCDOB: New York City Department of Buildings
PANYNJ: Port Authority of New York & New Jersey
PANYNJ (NYS): Port Authority of New York & New Jersey Operating on New York State Property
NYCDOB - C&D: New York City Department of Buildings - Cranes & Derricks Division
PANYNJ-REO: Port Authority of New York & New Jersey - Rsident Engineer's Office
WTC/Hub: World Trade Center transportation Center
NS11M&M: National September 11th Memorial and Museum
N/A: Not Applicable
N/R: Not Required

Notes:

1. As per RS 19-2 / Section 8.1.3.2, Service Cranes and Clamshells with a boom length including jib of less than 110', that will be operated entirely within PANYNJ property lines, and will not involve the moving of any loads on roadways or sidewalks do not require the filing of a CD-4 & CD-8 for a Certificate of On-Site Inspection.

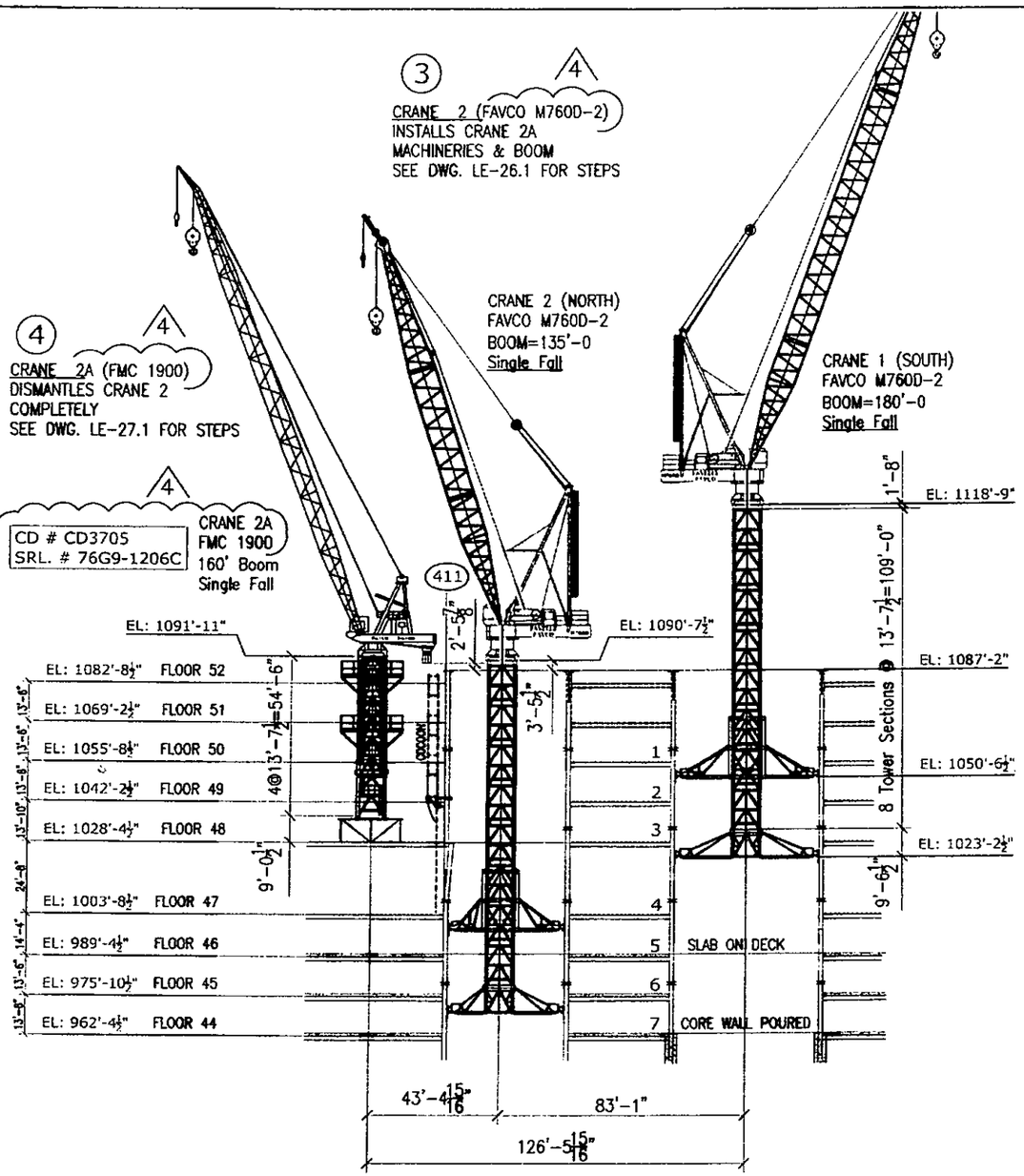

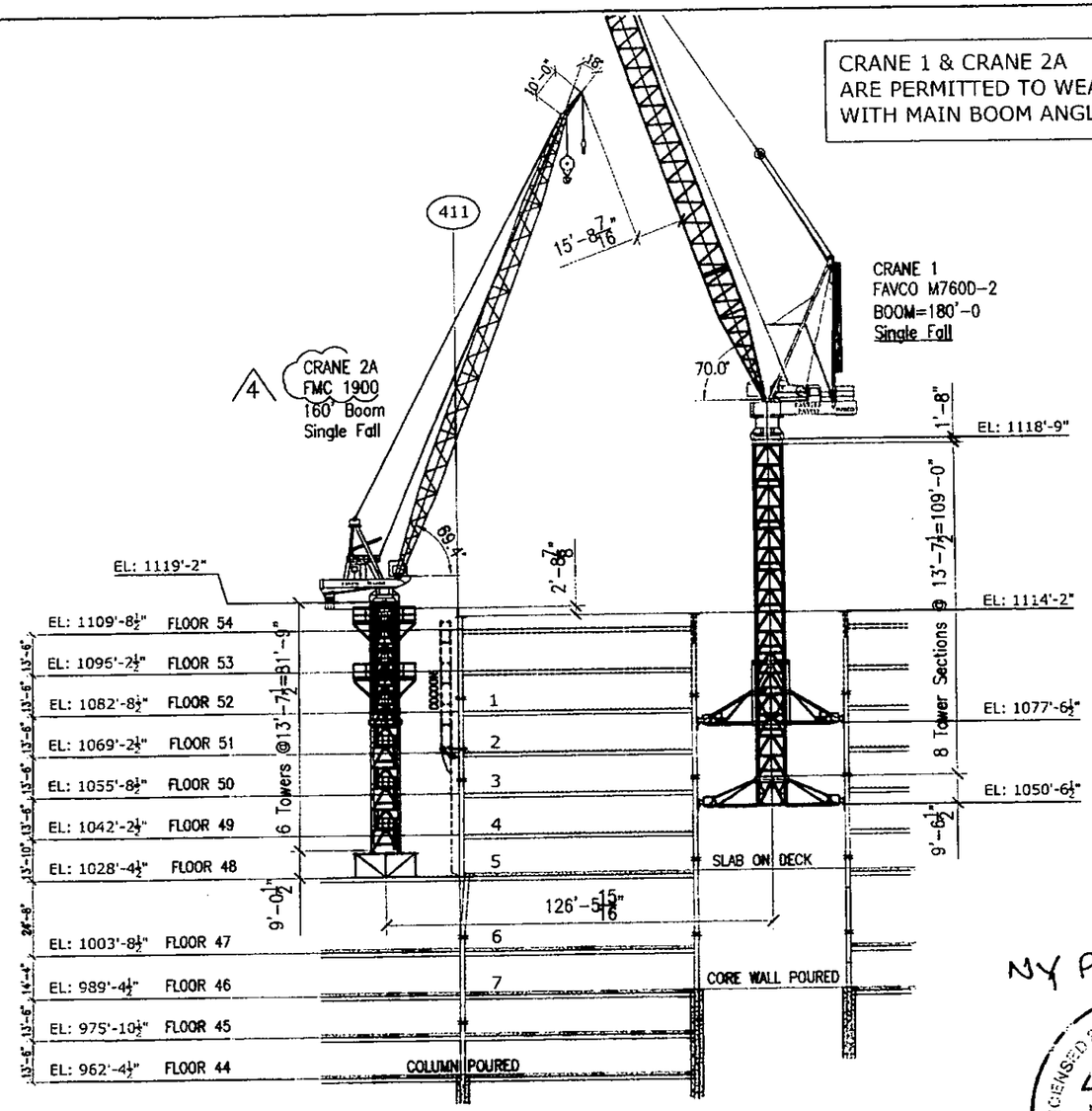

SEQ. #29

1. CRANE 1 JUMPED TO 50th. FLOOR.
2. CRANE 2 STAYS AT 47th. FLOOR
3. CRANE 2 INSTALLS CRANE 2A MACHINERIES & BOOM (SEE DWG. LE-26.1 FOR STEPS)
4. CRANE 2A DISMANTLES CRANE 2 COMPLETELY (SEE DWG. LE-27.1 FOR STEPS)
5. CRANE 1 ERECTS FLOORS 51 & 52.

SEQ. #30

1. CRANE 1 JUMPED TO 52nd. FLOOR.
2. 2 MORE TOWER SECTIONS ADDED TO CRANE 2A.
3. CRANE 1 & CRANE 2A ERECT FLOORS 53 & 54

NY PERMIT LP0368

LICENSED PROFESSIONAL ENGINEER
J. JURIMAE
PROVINCE OF ONTARIO

NOV 15, 2011

ERECT FLOORS **51, 52, 53, 54**

WORK THIS DWG. WITH DWG. LP-37, LE-25.3

REV.	DATE	DESCRIPTION
4	Oct. 17/2011	CRANE 2A CORRECTED TO SHOW FMC 1900
3	Oct. 8/2011	REFERENCE DWG. SHOWN FOR STEP 3 & STEP 4
2	Oct. 4/2011	DWG. COMPLETELY REVISED PER DISCUSSION
1	Sep. 19/2011	CRANE #2A NUMBER OF TOWER SECTIONS REVISED
0	Sep. 14/2011	FOR APPROVAL

DCM Erectors, Inc.
DCM ERECTORS INC.
STRUCTURAL STEEL & MISCELLANEOUS METALS
77 Belfield Rd., Suite 100
Etobicoke, Ontario
Canada M9W 1G6
Tel: (416) 241-6967
Fax: (416) 241-3239
110 East 42nd Street
Suite 1710
New York, N.Y. 10017
Tel: (212) 599-1603
Fax: (212) 599-1615

PROJECT:	WORLD TRADE CENTER TOWER 4
SITE:	150 Greenwich Street, New York, N.Y.
CLIENT:	TISHMAN CONSTRUCTION CORP.
TITLE:	LOGISTIC ELEVATION FOR CRANE #1 & CRANE #2A
CONTRACT No:	843
DRAWN:	Sam Sep. 14/2011
CHECKED:	
SCALE:	
DRAWING No:	LE-25.2 4

CRANE #2
UPPERWORKS IS TO BE POSITIVELY SLEW LOCKED WITH MAIN BOOM LENGTH SQUARE TO NORTHEAST MAST FACE
(ie. BOOM IS POINTING PLAN NORTHEAST)
AND MAIN HOOK AT MAXIMUM 130 Foot. RADIUS. (18° BOOM ANGLE TO HORIZONTAL).

4

CRANES #1, 2 & 2A OUT OF SERVICE LOGISTICS

REV.	DATE	DESCRIPTION
4	Dec. 12/2011	CRANE 2 BOOM SLEW LOCKED POINTING NORTH EAST
3	Dec. 9/2011	NOTE ADDED FOR STORM CASE (WIND OVER 30 mph)
2	Dec. 6/2011	CRANE 2A REVISED FOR 4 TOWER SECTIONS
1	Nov. 9/2011	CRANE 2A REVISED FOR 7 TOWER SECTIONS
0	Oct.31/2011	CRANE 2A WITH 8 TOWER SECTIONS

PROJECT: WORLD TRADE CENTER - TOWER 4
SITE: 150 GREENWICH STREET, NEW YORK, N.Y.
CLIENT: TISHMAN CONSTRUCTION CORP.
TITLE: CRANES OUT OF SERVICE LOGISTICS FOR CRANES #1, 2 & 2A
CONTRACT No: 843
DRAWING: Sam Oct. 1/2011
CHECKED:
SCALE:
BLOCK:
DRAWING No: LE-25.2A

DCM Erectors, Inc.
STRUCTURAL STEEL & MISCELLANEOUS METALS
ERECTORS INC.
77 Belfield Rd., Suite 100 Etobicoke, Ontario Canada M9W 1G5 Tel: (416) 241-6967 Fax: (416) 241-3239
110 East 42nd Street Suite 1704 New York, N.Y. 10017 Tel: (212) 599-1603 Fax: (212) 599-1615

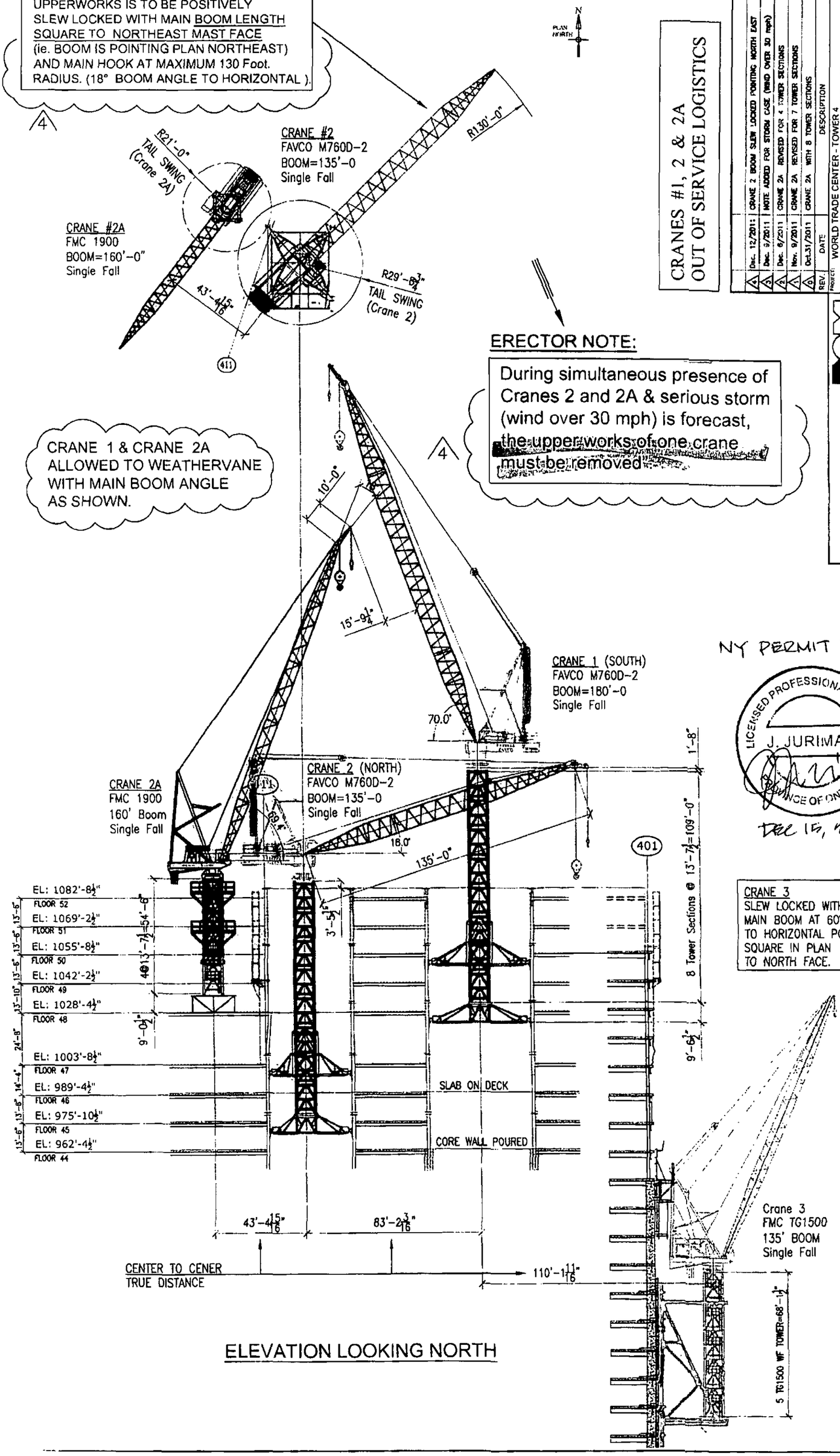

ERECTOR NOTE:

During simultaneous presence of Cranes 2 and 2A & serious storm (wind over 30 mph) is forecast, the upperworks of one crane must be removed

4

NY PERMIT LP368

LICENSED PROFESSIONAL ENGINEER
J. JURIMAE
PROVINCE OF ONTARIO

Dec 15, 2011

CRANE 3
SLEW LOCKED WITH MAIN BOOM AT 60° TO HORIZONTAL POINTING SQUARE IN PLAN TO NORTH FACE.

ELEVATION LOOKING NORTH

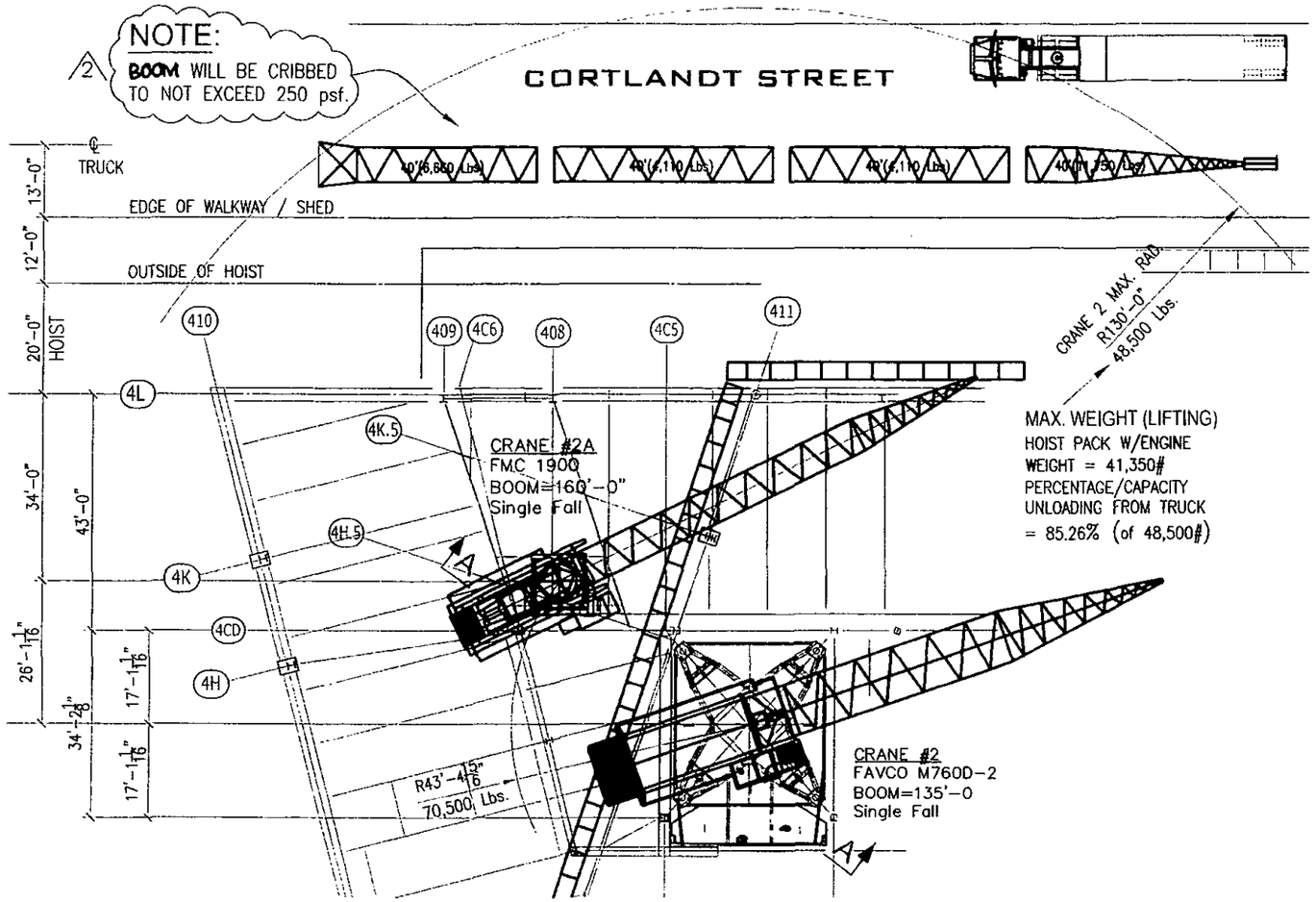

PLAN - CRANE 2 & CRANE 2A

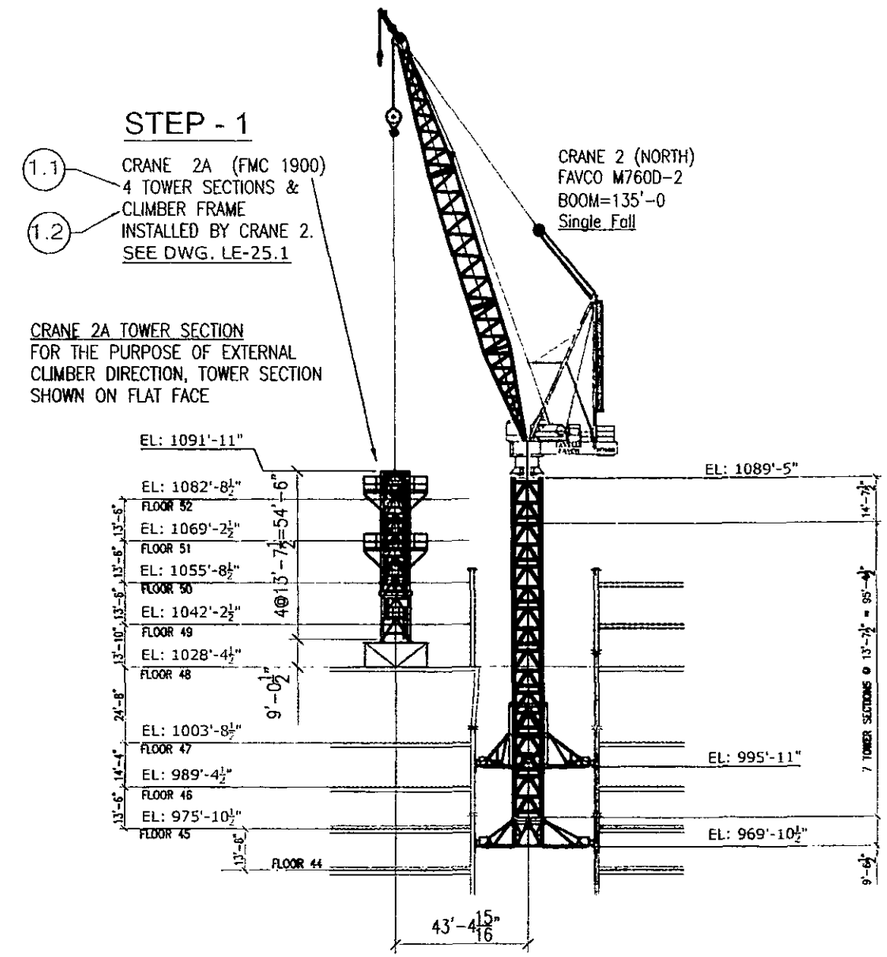

SECTION A-A

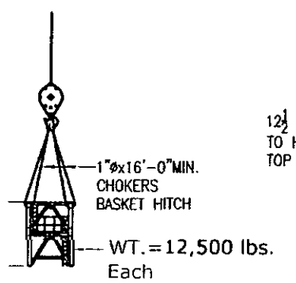

13'-7 1/2" TOWER

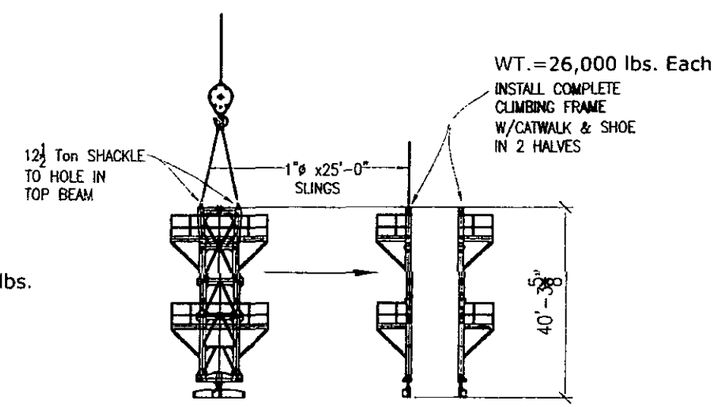

1.2 FMC 1900 Ext. CLIMBER
(SIM. RIGGING FOR EACH FRAME)

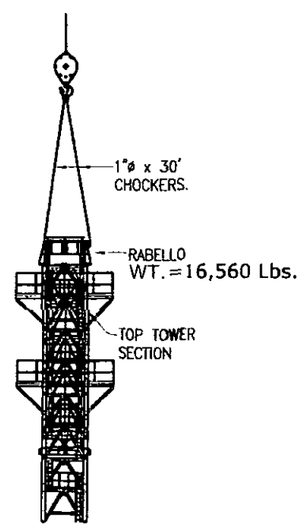

STEP - 2
RABELLO

STATE OF NEW YORK
GREGORY VIDGOR
No. 078380
LICENSED PROFESSIONAL ENGINEER
12.16.11

WORK THIS DWG. WITH DWG. LE-26.2 & LE-26.3

REV.	DATE	DESCRIPTION
2	Dec. 16/2011	LOAD IMPOSED NOTE ADDED AT BOOM ASSEMBLY AREA
1	Dec. 15/2011	BOOM ASSEMBLY AREA SHOWN & SECT. A-A ELEV. CORRECTED
0	Oct. 19/2011	FOR APPROVAL

DCM Erectors, Inc.
DCM ERECTORS INC
STRUCTURAL STEEL & MISCELLANEOUS METALS
77 Belfield Rd., Suite 100, Etobicoke, Ontario, Canada M9W 1G6, Tel: (416) 241-6967, Fax: (416) 241-3239
110 East 42nd Street, Suite 1710, New York, N.Y. 10017, Tel: (212) 599-1603, Fax: (212) 599-1615

PROJECT: WORLD TRADE CENTER TOWER 4
SITE: 150 Greenwich Street, New York, N.Y.
CLIENT: TISHMAN CONSTRUCTION CORP.
TITLE: INSTALLATION OF CRANE 2A ON 48th. FLOOR
CONTRACT No.: 843
DRAWN: Sam Oct.19/2011
CHECKED:
SCALE:
FLOOR:
DRAWING No.: LE-26.1 2

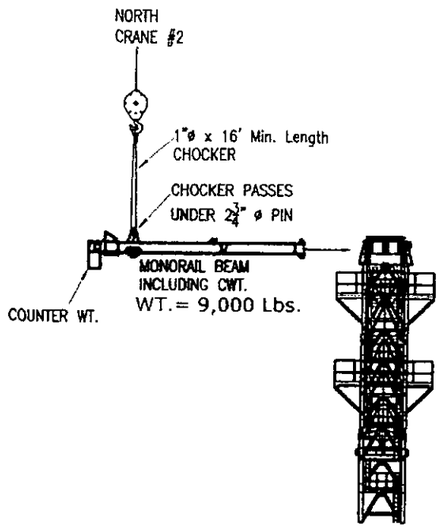

STEP - 3
MONORAIL

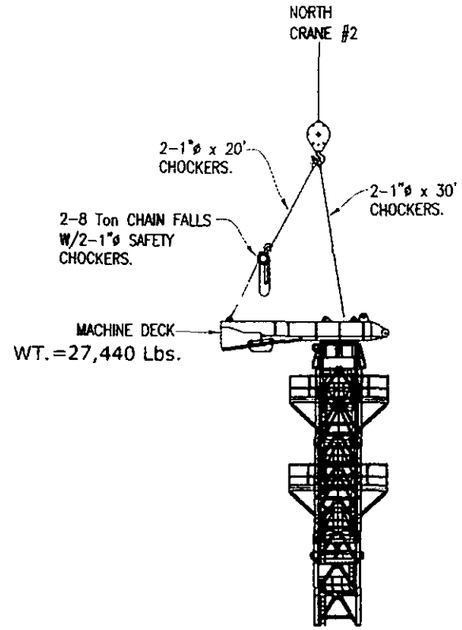

STEP - 4
MACHINE DECK

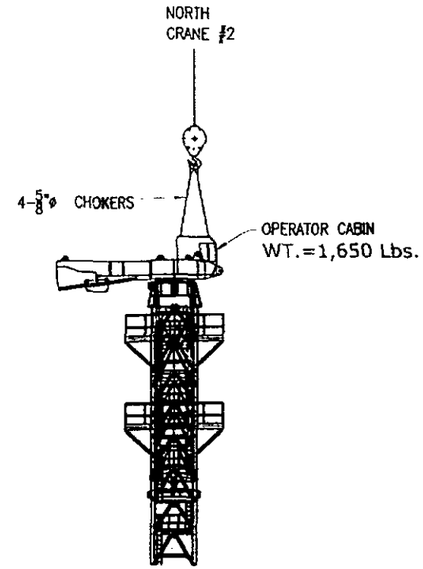

STEP - 5
OPERATOR CABIN

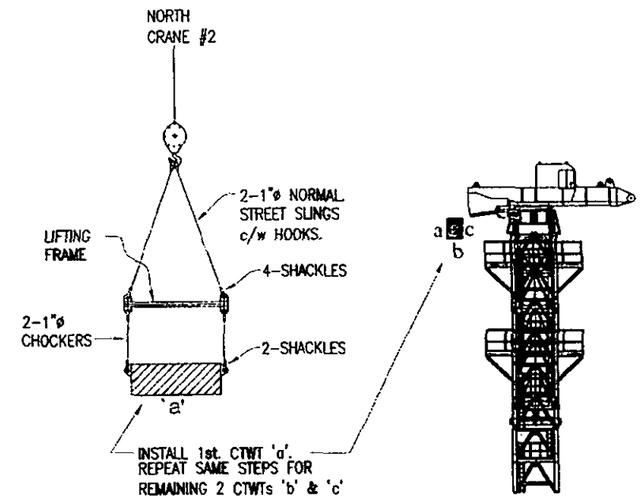

STEP - 6
MOVABLE
COUNTER WEIGHTS

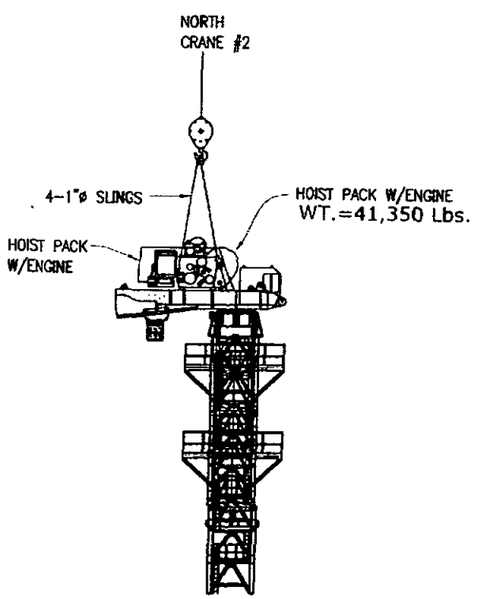

STEP - 7
HOIST PACK W/ENGINE

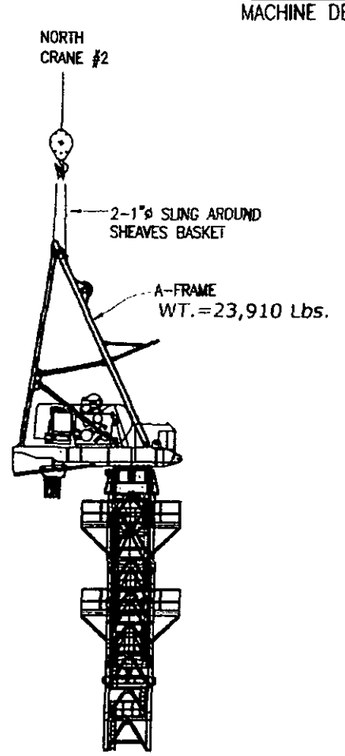

STEP - 8
A-FRAME

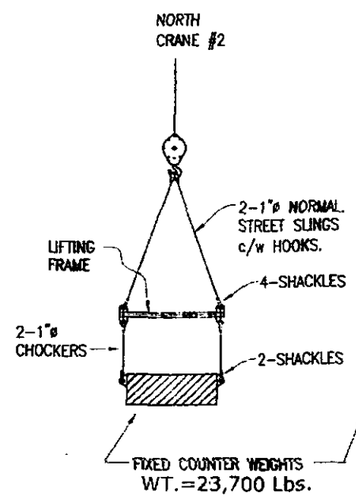

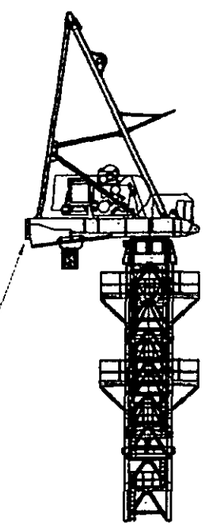

STEP - 9
FIXED COUNTER WEIGHT

NY PERMIT LP0368

LICENSED PROFESSIONAL ENGINEER
J. JURIMAE
PROVINCE OF ONTARIO

NOV 15, 2011

WORK THIS DWG. WITH DWG. LE-26.1 & LE-26.3

REV.	DATE	DESCRIPTION
0	Oct. 20/2011	FOR APPROVAL

DCM Erectors, Inc.
DCM ERECTORS INC.
STRUCTURAL STEEL & MISCELLANEOUS METALS

77 Belfield Rd., Suite: 100
Etobicoke, Ontario
Canada M9W 1G6
Tel: (416) 241-6967
Fax: (416) 241-3239

110 East 42nd Street
Suite: 1710
New York, N.Y. 10017
Tel: (212) 599-1603
Fax:(212) 599-1615

PROJECT: WORLD TRADE CENTER TOWER 4
SITE: 150 Greenwich Street, New York, N.Y.
CLIENT: TISHMAN CONSTRUCTION CORP.
TITLE: INSTALLATION OF CRANE 2A ON 48th. FLOOR
CONTRACT No: 843
DRAWN: Sam Oct.20/2011
CHECKED:
SCALE:
BLOCK:
DRAWING No: LE-26.2 0

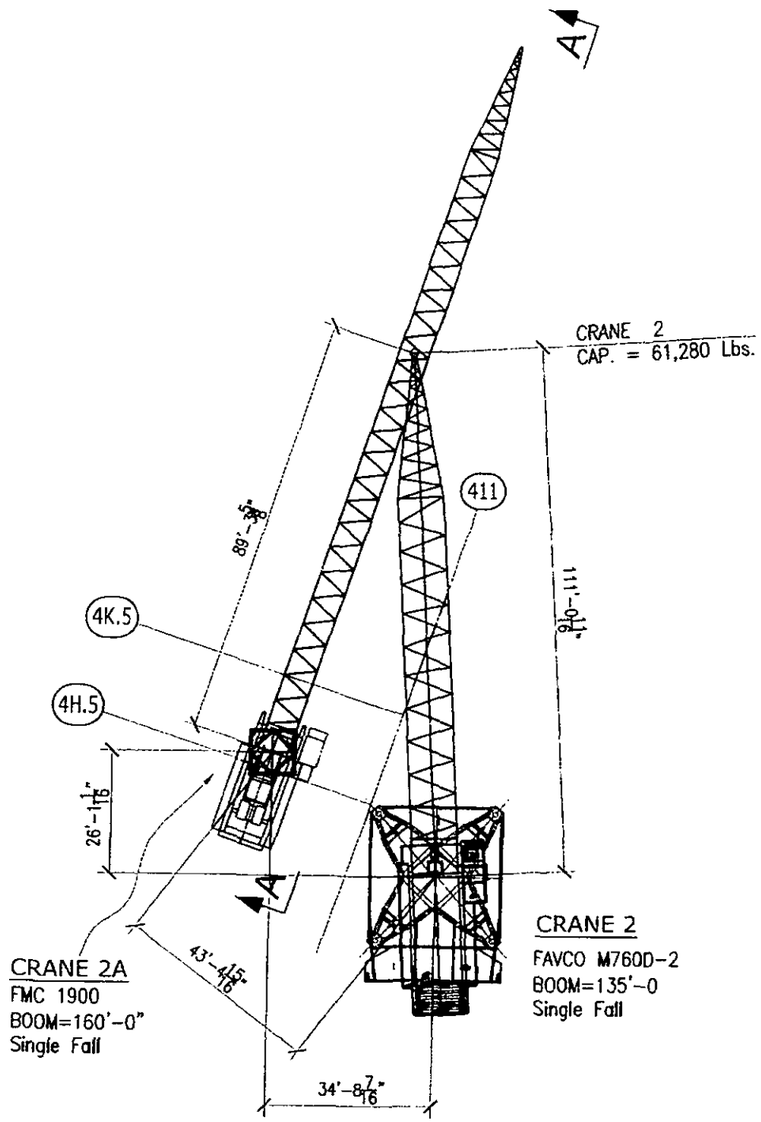

PLAN - CRANE 2 & CRANE 2A

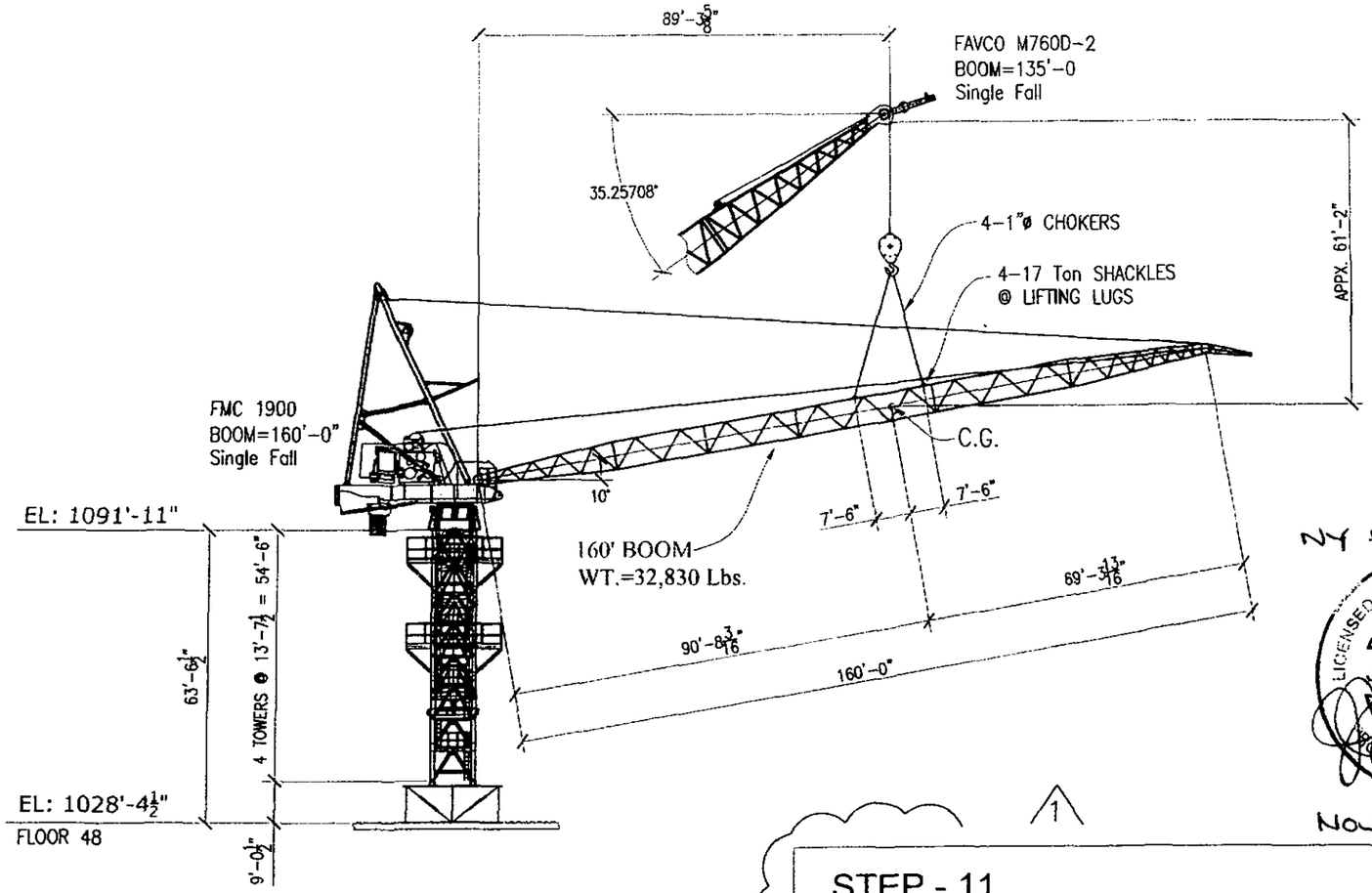

SECTION A-A

STEP - 10

160' BOOM

NY PERMIT LP0368

LICENSED PROFESSIONAL ENGINEER J. JURIMAE PROVINCE OF ONTARIO

NOV 15, 2011

1

STEP - 11

1. CRANE 2A BOOM IS TO BE LOAD TESTED, PRIOR TO START USING THE CRANE (2A).
2. AS SOON AS CRANE 2A BOOM IS INSTALLED, USE CRANE 2A AND DISMANTLE CRANE 2 BOOM & MACHINERY COMPONENTS.
3. LATER USE CRANE 2A TO DISMANTLE CRANE 2 TOWER SECTIONS, UPPER & LOWER BASKETS.

WORK THIS DWG. WITH DWG. LE-26.1 & LE-26.2

REV.	DATE	DESCRIPTION
1	Oct. 31/2011	STEP 11 NOTE ADDED
0	Oct. 20/2011	FOR APPROVAL

DCM Erectors, Inc.

DCM ERECTORS INC.

STRUCTURAL STEEL & MISCELLANEOUS METALS

77 Belfield Rd., Suite 100
Etobicoke, Ontario
Canada M9W 1G6
Tel: (416) 241-6967
Fax: (416) 241-3739

110 East 42nd Street
Suite 1710
New York, N.Y. 10017
Tel: (212) 599-1603
Fax: (212) 599-1615

PROJECT:	WORLD TRADE CENTER TOWER 4
SITE:	150 Greenwich Street, New York, N.Y.
CLIENT:	TISHMAN CONSTRUCTION CORP.
TITLE:	INSTALLATION OF CRANE 2A ON 48th. FLOOR
CONTRACT NO:	843
DRAWN:	Sam Oct.20/2011
CHECKED:	
SCALE:	
CHECK:	
DRAWING NO:	LE-26.3 1

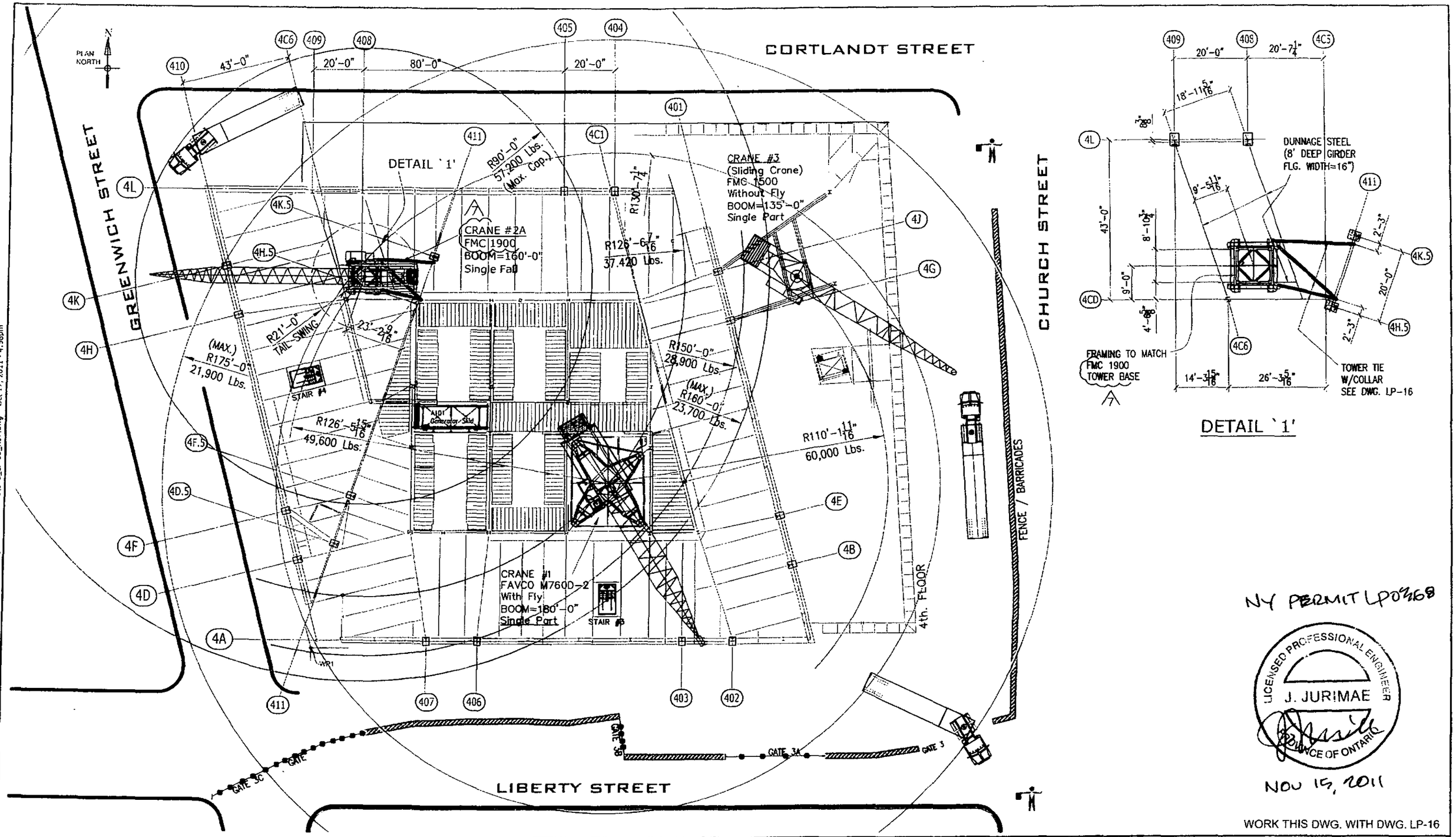

DETAIL `1'

NY PERMIT LP02168

LICENSED PROFESSIONAL ENGINEER
J. JURIMAE
PROVINCE OF ONTARIO

NOV 15, 2011

WORK THIS DWG. WITH DWG. LP-16

PLAN @ 48th. FLOOR

REV.	DATE	DESCRIPTION
7	Oct. 17/2011	CRANE 2A CORRECTED TO SHOW FMC 1900
6	Sep. 6/2011	CRANE 2A MAX. LIFT CAPACITY & RADIUS SHOWN
5	Aug.15/2011	CRANE CHANGED TO FAVCO 1900 (HENCE COLLAR & TIES)
4	July 11/2011	CRANE TOWER ROTATED BY 90 DEG.& TOWER LOCATION REVISED
3	Mar. 19/2011	CRANE #2A CHANGED TO FAVCO M760D WITH 760 TOWER SECTIONS
2	Nov. 29/2010	CRANE # (NUMBER) UPDATED

DCM Erectors, Inc.
DCM ERECTORS INC.
STRUCTURAL STEEL & MISCELLANEOUS METALS
77 Belfield Rd., Suite 100
Etobicoke, Ontario
Canada M9W 1G6
Tel: (416) 241-6967
Fax: (416) 241-3239
110 East 42nd Street
Suite 1704
New York, N.Y. 10017
Tel: (212) 599-1603
Fax: (212) 599-1615

PROJECT:	WORLD TRADE CENTER - TOWER 4
SITE:	150 GREENWICH STREET, NEW YORK, N.Y.
CLIENT:	TISHMAN CONSTRUCTION CORP.
TITLE:	NORTH CRANE #2A FMC 1900 ON TOP OF 48th. FLOOR
CONTRACT No:	843
DRAWN:	Samy June 18/2010
CHECKED:	
SCALE:	
REVIEW:	
DRAWING No:	LP-15 7

Printed By: ASDA/samyc Q:\843_WTC-4_Erection Aids\843X009_Crane 2A Dunnage\DCM Logistics Dwg's\AutoCAD Files\843_LP-15_R07.dwg Oct 17, 2011 - 4:56pm

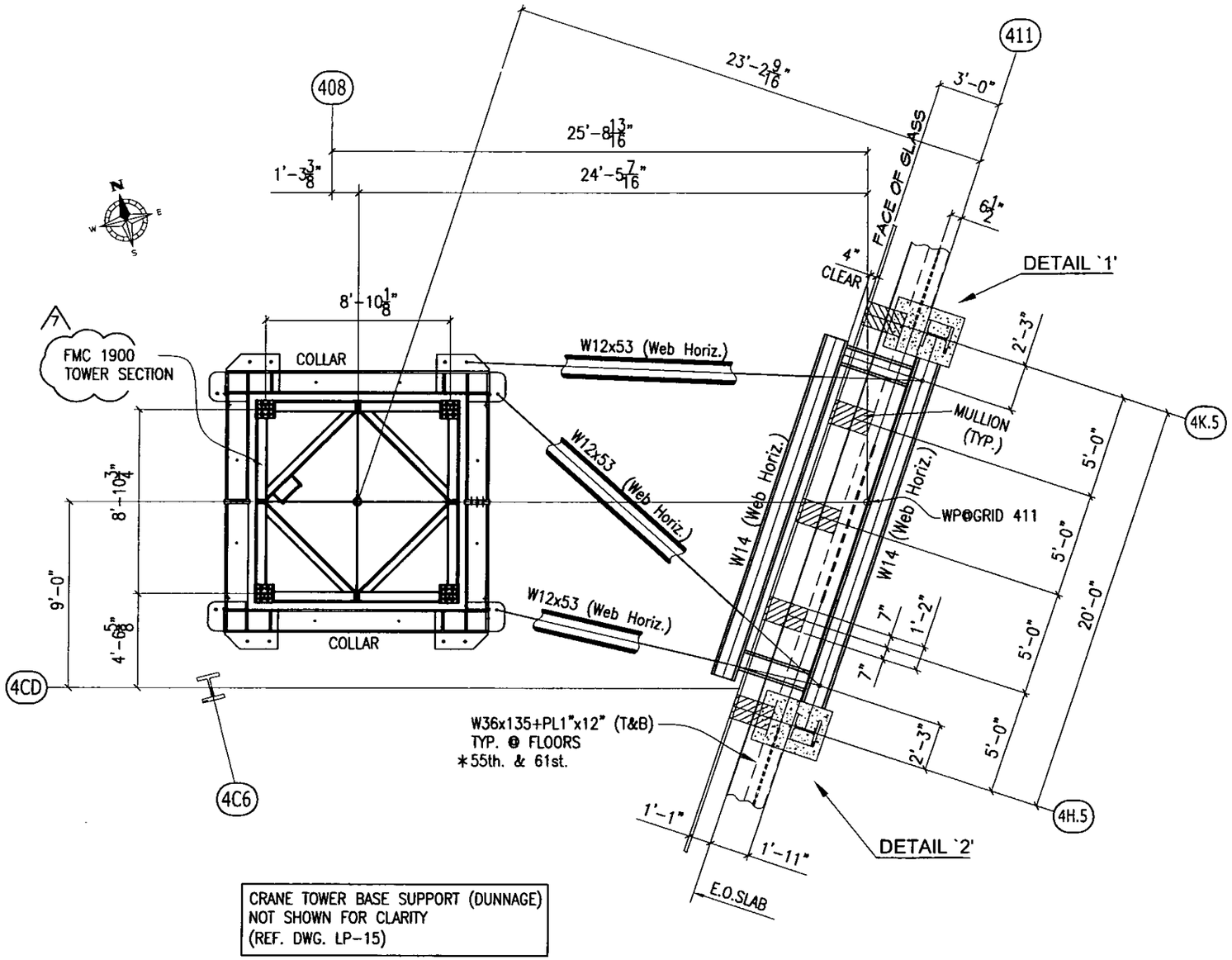

CRANE TOWER BASE SUPPORT (DUNNAGE)
NOT SHOWN FOR CLARITY
(REF. DWG. LP-15)

CRANE #2A TOWER COLLAR & TIE

* @ 55th. FLOOR (T.O.STL. EL: 1123'-2 1/2)
  @ 61st. FLOOR (T.O.STL. EL: 1204'-2 1/2)
  REF. DWG. LE-0

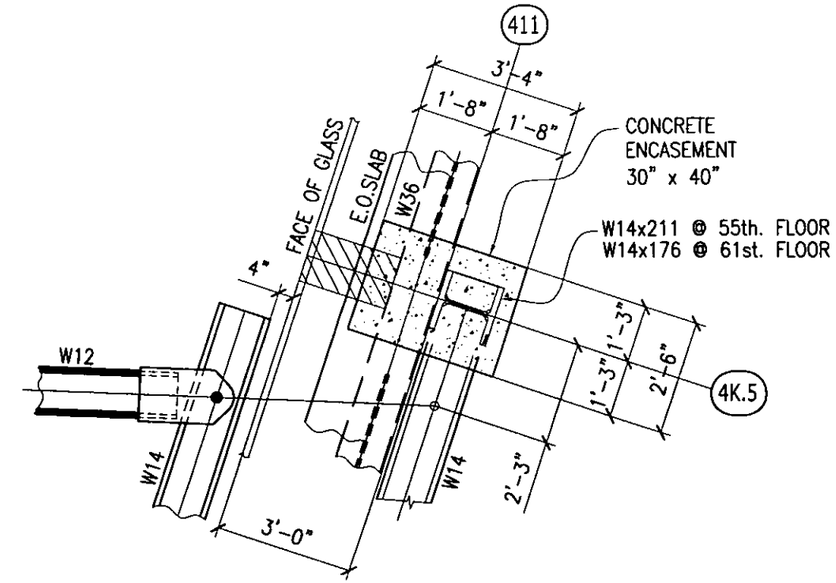

DETAIL `1'

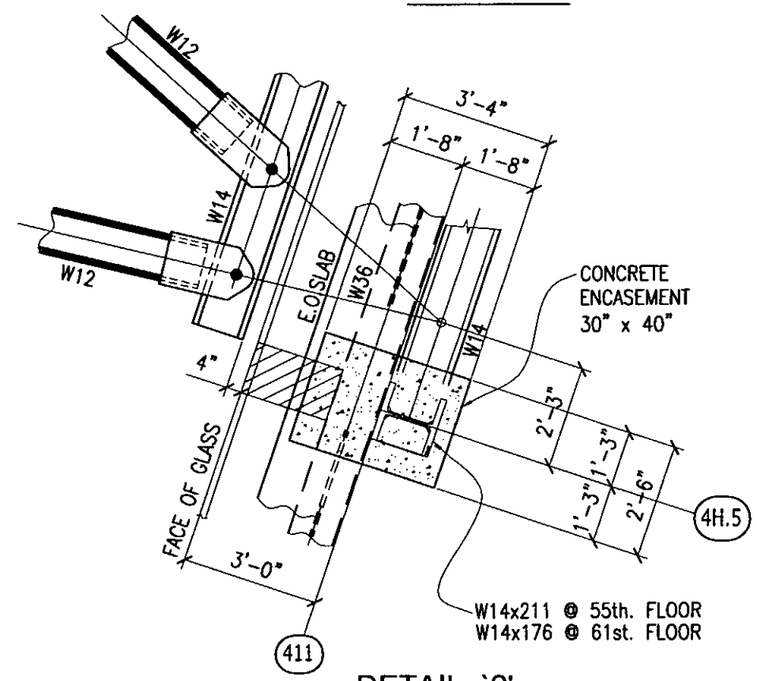

DETAIL `2'

WORK THIS DWG. WITH DWG. LP-15 & LP-0

REV.	DATE	DESCRIPTION
7	Oct. 17/2011	CRANE 2A CORRECTED TO SHOW FMC 1900
6	Aug.15/2011	CRANE CHANGED TO FAVCO 1900 (HENCE COLLAR & TIES)
5	July 11/2011	CRANE TOWER ROTATED BY 90 DEG.& TOWER LOCATION REVISED
4	Mar. 22/2011	CLEARANCE BETWEEN GLASS & W14 REVISED PER TISHMAN COMMENT
3	Mar. 19/2011	CRANE #2A CHANGED TO FAVCO M760D WITH 760 TOWER SECTIONS
2	Nov. 29/2010	CRANE # (NUMBER) UPDATED

DCM Erectors, Inc.
DCM ERECTORS INC.
STRUCTURAL STEEL & MISCELLANEOUS METALS
77 Belfield Rd., Suite 100
Etobicoke, Ontario
Canada M9W 1G6
Tel: (416) 241-6967
Fax: (416) 241-3239
110 East 42nd Street
Suite 1704
New York, N.Y. 10017
Tel: (212) 599-1603
Fax: (212) 599-1615

PROJECT:	WORLD TRADE CENTER - TOWER 4
SITE:	150 GREENWICH STREET, NEW YORK, N.Y.
CLIENT:	TISHMAN CONSTRUCTION CORP.
TITLE:	FMC 1900 ABOVE 48th. FLOOR TOWER SECTION COLLAR & TIES
CONTRACT No:	843
DRAWN:	Sam Aug. 23/2010
CHECKER:	
SCALE:	
BLOCK:	
DRAWING No:	LP-16 7

Printed By: ASDA/samyc Q:\843_WTC-4_Erection Aids\843X009_Crane 2A Dunnage\DCM Logistics Dwg's\AutoCAD Files\843_LP-16_R07.dwg Dec 14, 2011 - 5:40pm

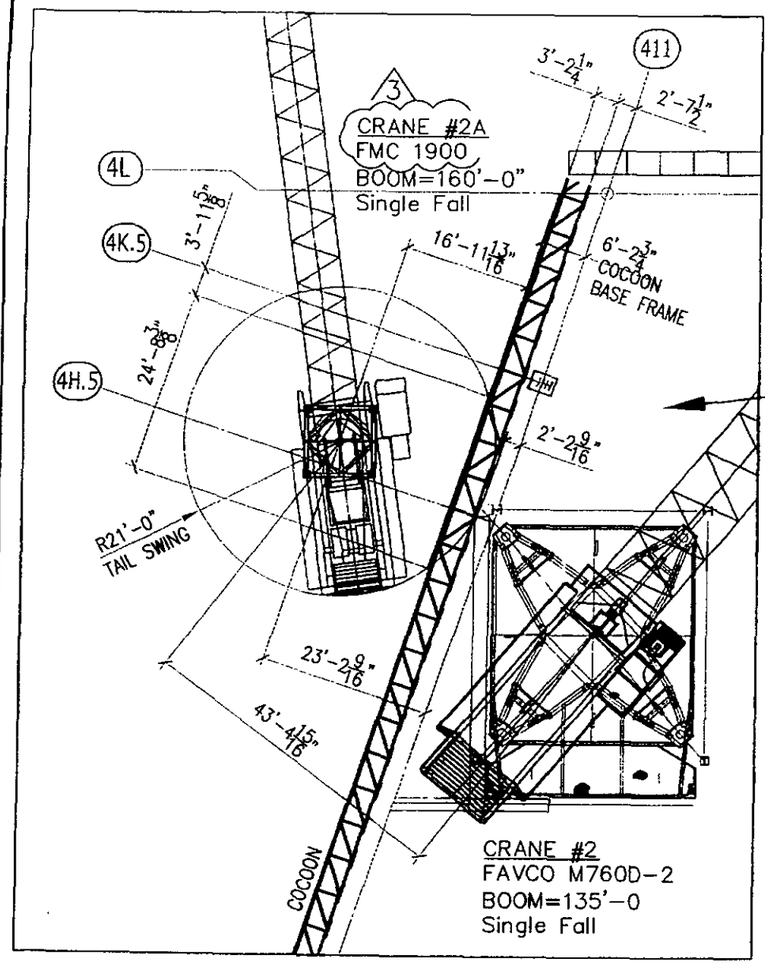

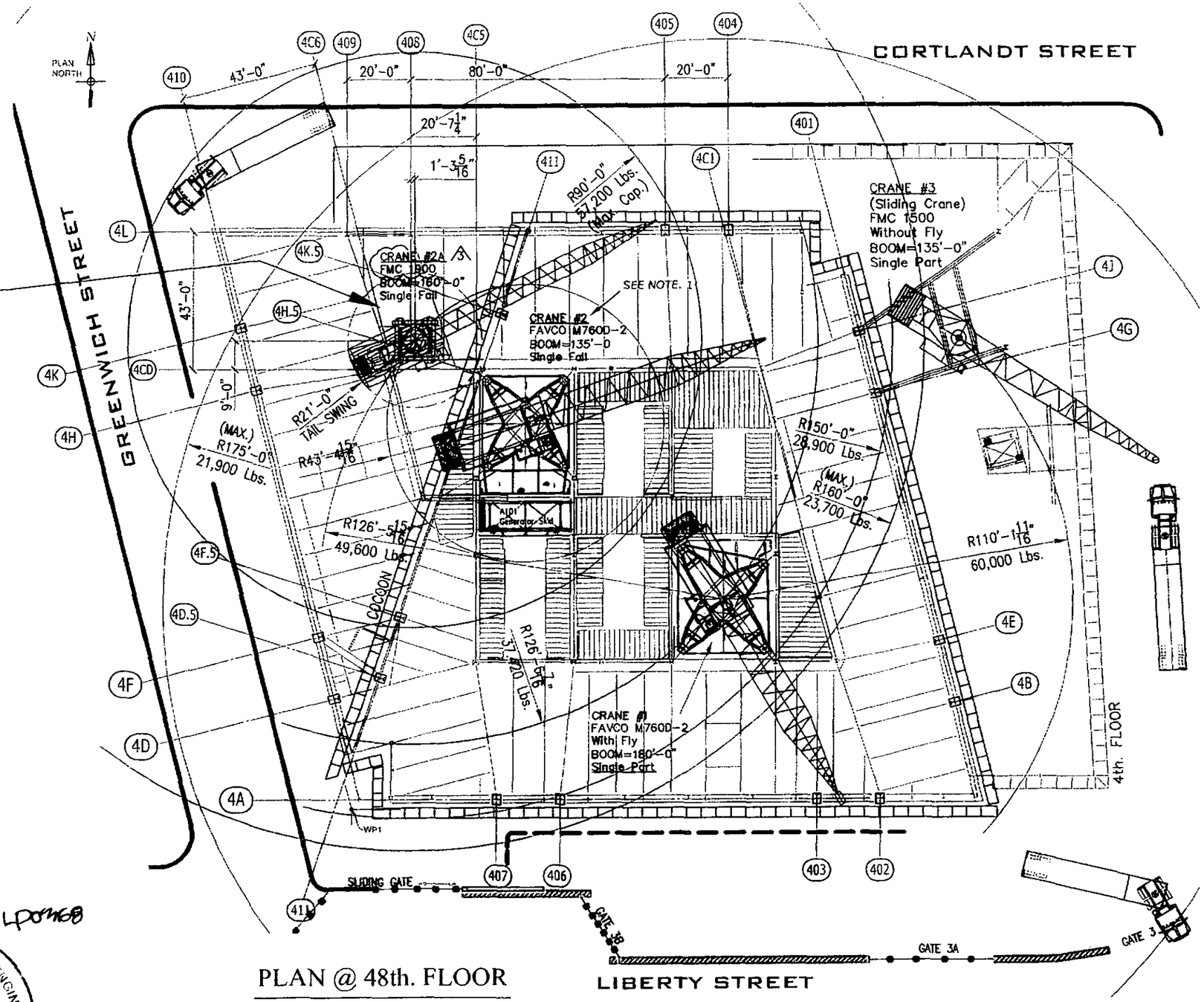

1. CRANE #2 WILL JUMP UNTIL SEQ. 27
   ie. UPPER BASKET AT 47th. FLOOR
   AS WORKING FLOOR.

NY PERMIT LP0468

LICENSED PROFESSIONAL ENGINEER
J. JURIMAE
PROVINCE OF ONTARIO

NOV 15, 2011

PLAN @ 48th. FLOOR

WORK THIS DWG. WITH DWG. LE-25.1

REV.	DATE	DESCRIPTION
3	Oct. 17/2011	CRANE 2A CORRECTED TO SHOW FMC 1900
2	Oct. 3/2011	DEATIL ADDED TO SHOW CRANE #2A TAIL SWING AT COCOON
1	Sep. 22/2011	CRANE #2 ADDED (STAYS UNTIL SEQ. 27 - UPTO 47th. FLOOR)
0	Sep. 14/2011	FOR APPROVAL

DCM Erectors, Inc.
DCM ERECTORS INC.
STRUCTURAL STEEL & MISCELLANEOUS METALS
77 Bathfield Rd., Suite 100, Etobicoke, Ontario, Canada M9W 1G8, Tel: (416) 241-6987, Fax: (416) 241-3239
110 East 42nd Street, Suite 1704, New York, N.Y. 10017, Tel: (212) 599-1603, Fax: (212) 599-1615

PROJECT:	WORLD TRADE CENTER - TOWER 4
SITE:	150 GREENWICH STREET, NEW YORK, N.Y.
CLIENT:	TISHMAN CONSTRUCTION CORP.
TITLE:	LOGISTIC PLAN FOR CRANE #1 & CRANE #2A
CONTRACT No:	843
DRAWN:	Sam Sep. 14/2011
CHECKED:	
SCALE:	
REVIEW:	
DRAWING No:	LP-37 (3)

Printed By: ASDA/samyc Q:\843_WTC-4_Erection Aids\843X009_Crane 2A Dunnage\DCM Logistics Dwgs\AutoCAD Files\843_LP-37_R03.dwg Oct. 17, 2011 - 5:00pm

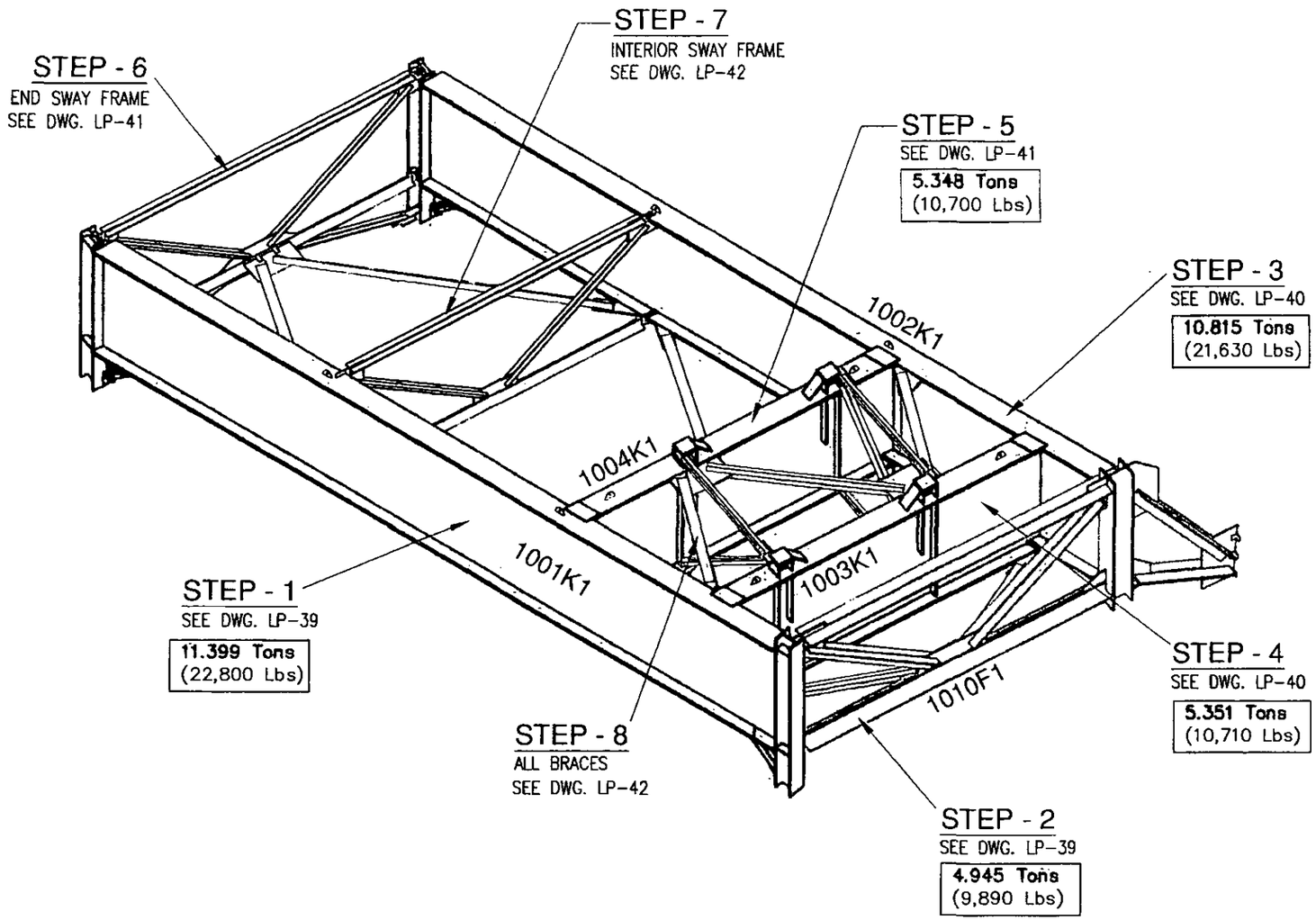

CRANE 2A - DUNNAGE INSTALLATION

STATE OF NEW YORK
GRIGORIY VIDGOF
No. 070550
LICENSED PROFESSIONAL ENGINEER
12.16.11

WORK THIS DWG. WITH DWGS.
LP-39, LP-40, LP-41, LP-42

REV.	DATE	DESCRIPTION
0	Nov.28/2011	FOR APPROVAL

DCM Erectors, Inc.
DCM ERECTORS INC.
STRUCTURAL STEEL & MISCELLANEOUS METALS
77 Belfield Rd., Suite 100, Etobicoke, Ontario, Canada M9W 1G6, Tel: (416) 241-6957, Fax: (416) 241-3239
110 East 42nd Street, Suite 1704, New York, N.Y. 10017, Tel: (212) 599-1603, Fax: (212) 599-1615

PROJECT:	WORLD TRADE CENTER - TOWER 4
SITE:	150 GREENWICH STREET, NEW YORK, N.Y.
CLIENT:	TISHMAN CONSTRUCTION CORP.
TITLE:	CRANE 2A DUNNAGE INSTALLATION LOGISTIC
CONTRACT No:	843
DRAWN:	Sam Nov.28/2011
CHECKER:	
SCALE:	
BLOCK:	
DRAWING No:	LP-38 0

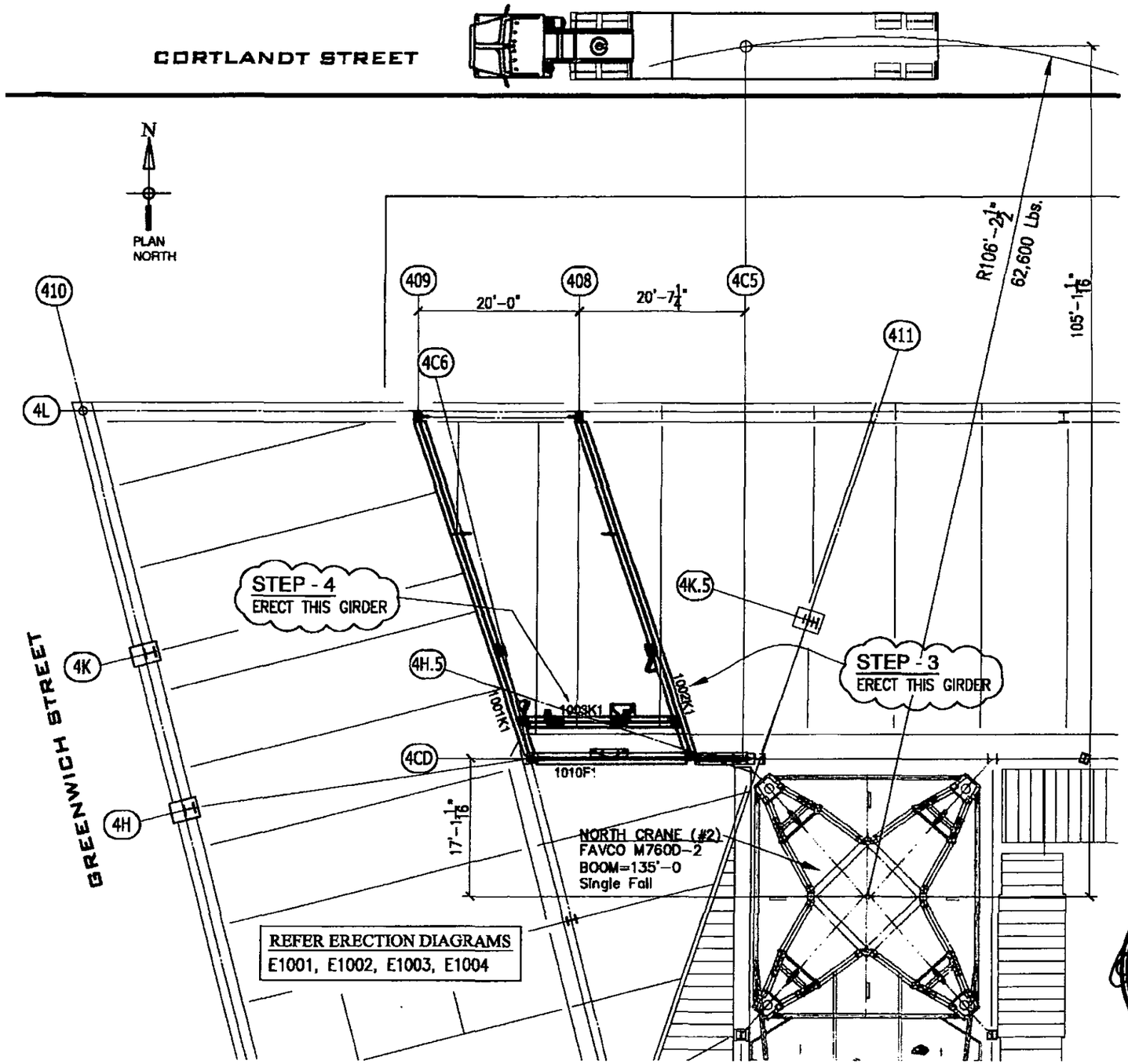

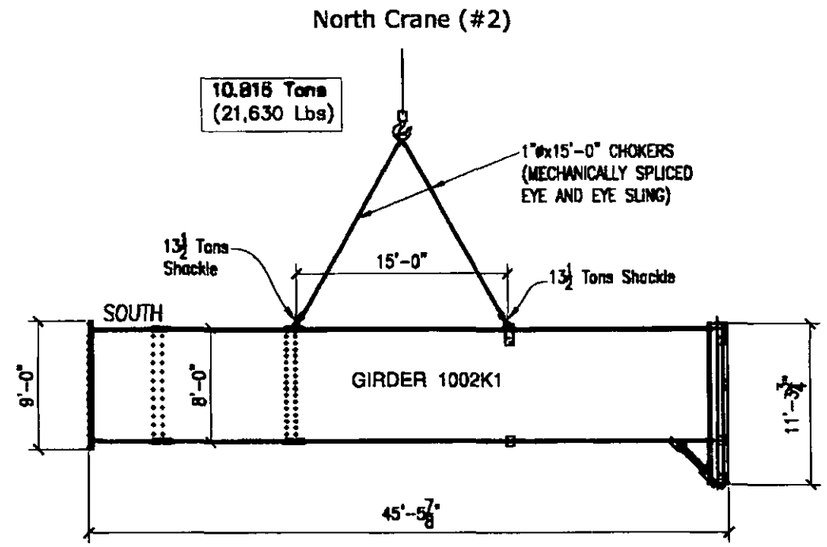

STEP `3'

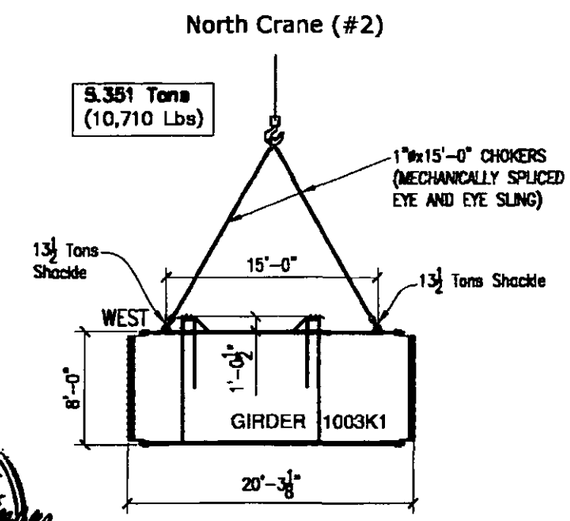

STEP `4'

STATE OF NEW YORK
GREGORY VIDGOR
No. 078380
LICENSED PROFESSIONAL ENGINEER
12.16.11

WORK THIS DWG. WITH DWG. LP-38, LP-39, LP-41, LP-42

CRANE 2A - DUNNAGE INSTALLATION

PLAN AT 48th. FLOOR

REV.	DATE	DESCRIPTION
0	Nov.28/2011	FOR APPROVAL

DCM Erectors, Inc.

STRUCTURAL STEEL & MISCELLANEOUS METALS

77 Bedfield Rd., Suite 100, Etobicoke, Ontario, Canada M9W 1G6, Tel: (416) 241-6967, Fax: (416) 241-3239

110 East 42nd Street, Suite 1704, New York, N.Y. 10017, Tel: (212) 599-1603, Fax: (212) 599-1615

PROJECT:	WORLD TRADE CENTER - TOWER 4
SITE:	150 GREENWICH STREET, NEW YORK, N.Y.
CLIENT:	TISHMAN CONSTRUCTION CORP.
TITLE:	CRANE 2A DUNNAGE INSTALLATION LOGISTIC
CONTRACT No:	843
DRAWN:	Sam Nov.28/2011
CHECKED:	
SCALE:	
BLOCK:	
DRAWING No:	LP-40

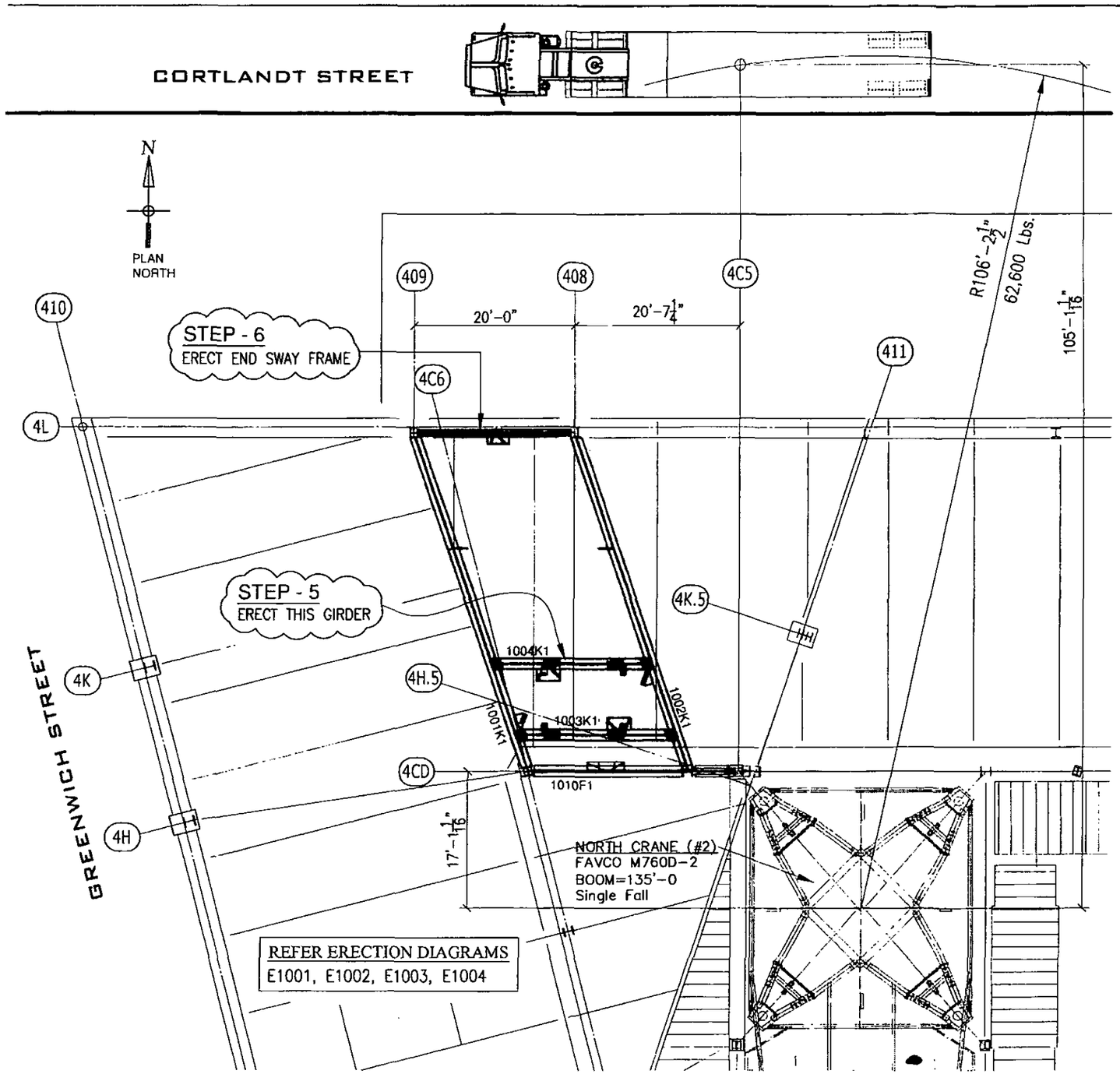

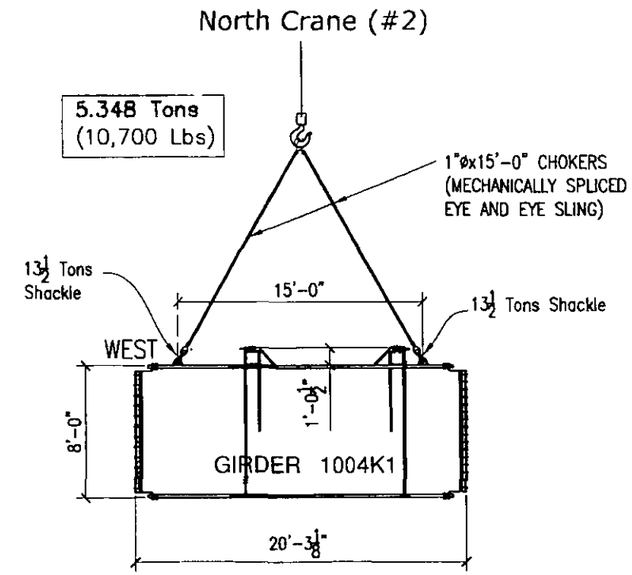

STEP `5'

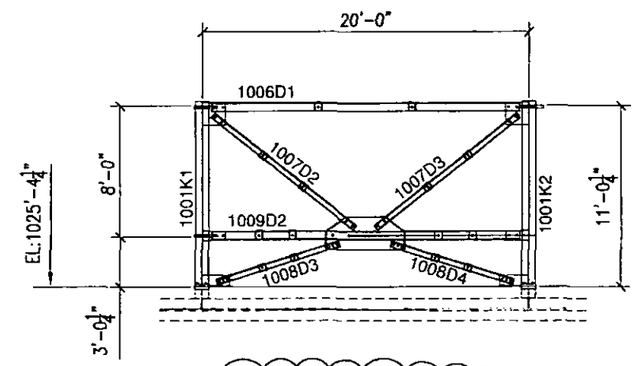

ERECT END SWAY FRAME BRACES
(REFER ERECTION DIAGRAM E1002)

STEP `6'
LOOKING NORTH

STATE OF NEW YORK
GREGORY VIDGOR
No. 078380
LICENSED PROFESSIONAL ENGINEER
12.16.11

WORK THIS DWG. WITH DWG. LP-38, LP-39, LP-40, LP-42

CRANE 2A - DUNNAGE INSTALLATION

PLAN AT 48th. FLOOR

REV.	DATE	DESCRIPTION
0	Nov.28/2011	FOR APPROVAL

DCM Erectors, Inc.

DCM ERECTORS INC.

STRUCTURAL STEEL & MISCELLANEOUS METALS

77 Belfield Rd., Suite 100
Etobicoke, Ontario
Canada M9W 1G6
Tel: (416) 241-6967
Fax: (416) 241-3239

110 East 42nd Street
Suite 1704
New York, N.Y. 10017
Tel: (212) 599-1603
Fax: (212) 599-1615

PROJECT:	WORLD TRADE CENTER - TOWER 4
SITE:	150 GREENWICH STREET, NEW YORK, N.Y.
CLIENT:	TISHMAN CONSTRUCTION CORP.
TITLE:	CRANE 2A DUNNAGE INSTALLATION LOGISTIC
CONTRACT No:	843
DRAWN:	Sam Nov.28/2011
CHECKER:	
SCALE:	
BLOCK:	
DRAWING No:	LP-41

CORTLANDT STREET

N
PLAN NORTH

410
409
408
4C5
4C6
411
4L
4K
4H
4K.5
4H.5
4CD

20'-0"
20'-7¼"
105'-1 1/16"
17'-1 1/16"
R106'-2½"
62,600 Lbs.

STEP - 7
ERECT INTERIOR SWAY FRAME

STEP - 8
ERECT ALL BRACES
REFER ERECTION DIAGRAMS
E1001 & E1002

STEP - 8

1004K1
1003K1
1001K1
1008D1
1002K1
1010F1

GREENWICH STREET

NORTH CRANE (#2)
FAVCO M760D-2
BOOM=135'-0
Single Fall

REFER ERECTION DIAGRAMS
E1001, E1002, E1003, E1004

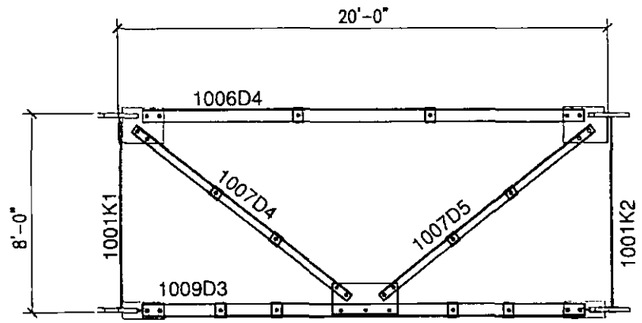

ERECT INTERIOR SWAY FRAME
(REFER ERECTION DIAGRAM E1002)

STEP `7'
LOOKING NORTH

STATE OF NEW YORK
GREGORY VIDGOR
No. 079380
LICENSED PROFESSIONAL ENGINEER
12.16.11

WORK THIS DWG. WITH DWG. LP-38, LP-39, LP-40, LP-41

CRANE 2A - DUNNAGE INSTALLATION

PLAN AT 48th. FLOOR

REV.	DATE	DESCRIPTION
0	Nov.28/2011	FOR APPROVAL

DCM Erectors, Inc.

STRUCTURAL STEEL & MISCELLANEOUS METALS

77 Belfield Rd., Suite 100
Etobicoke, Ontario
Canada M9W 1G6
Tel: (416) 241-6967
Fax: (416) 241-3239

110 East 42nd Street
Suite 1704
New York, N.Y. 10017
Tel: (212) 599-1603
Fax: (212) 599-1615

PROJECT:	WORLD TRADE CENTER - TOWER 4
SITE:	150 GREENWICH STREET, NEW YORK, N.Y.
CLIENT:	TISHMAN CONSTRUCTION CORP.
TITLE:	CRANE 2A DUNNAGE INSTALLATION LOGISTIC
CONTRACT No:	843
DRAWN:	Sam Nov.28/2011
CHECKED:	
SCALE:	
BLOCK:	
DRAWING No:	LP-42

CORTLANDT STREET

PLAN NORTH

EDGE OF WALKWAY / SHED

4th. Floor

CRANE #2A
FMC 1900
(With Climbing Frame)
BOOM=160'-0"
Single Fall

MAX. WEIGHT LIFTING
BY CRANE 2A
LOWER BASKET+2 ARMS
WEIGHT = 44,600 Lbs.
PERCENTAGE/CAPACITY
LOADING ON TO TRUCK
= 78.25% (OF 57,000 Lbs.)

R81'-3 15/16" 57,000 Lbs.

CRANE #3
SLIDING CRANE
FMC TG1500
BOOM=135'-0"
Single Fall

R43'-4 15/16" 57,200 Lbs

CRANE #2
FAVCO M760D-2
BOOM=135'-0
Single Fall

R83'-2 3/16" 70,500 Lbs.

GREENWICH STREET

48th. Floor

SEE DWG. LP-43.1
FOR CRANE 2 BOOM
LAY DOWN LOCATION

CRANE #1
FAVCO M760D-2
BOOM=180'-0
Single Fall

MAX. WEIGHT LIFTING
BY CRANE 1
POWER PACK WINCH
WEIGHT = 54,000 Lbs.
PERCENTAGE/CAPACITY
LOADING ON TO TRUCK
= 78.26% (OF 69,000 Lbs.)

PLY WOOD BARRIER

R95'-0"± 69,000 Lbs.

SOUTH HOIST

GATE 3A

GATE TRACK

GATE 3B

LIBERTY STREET

LOGISTIC PLAN OF CRANES
(@ 48th. FLOOR)

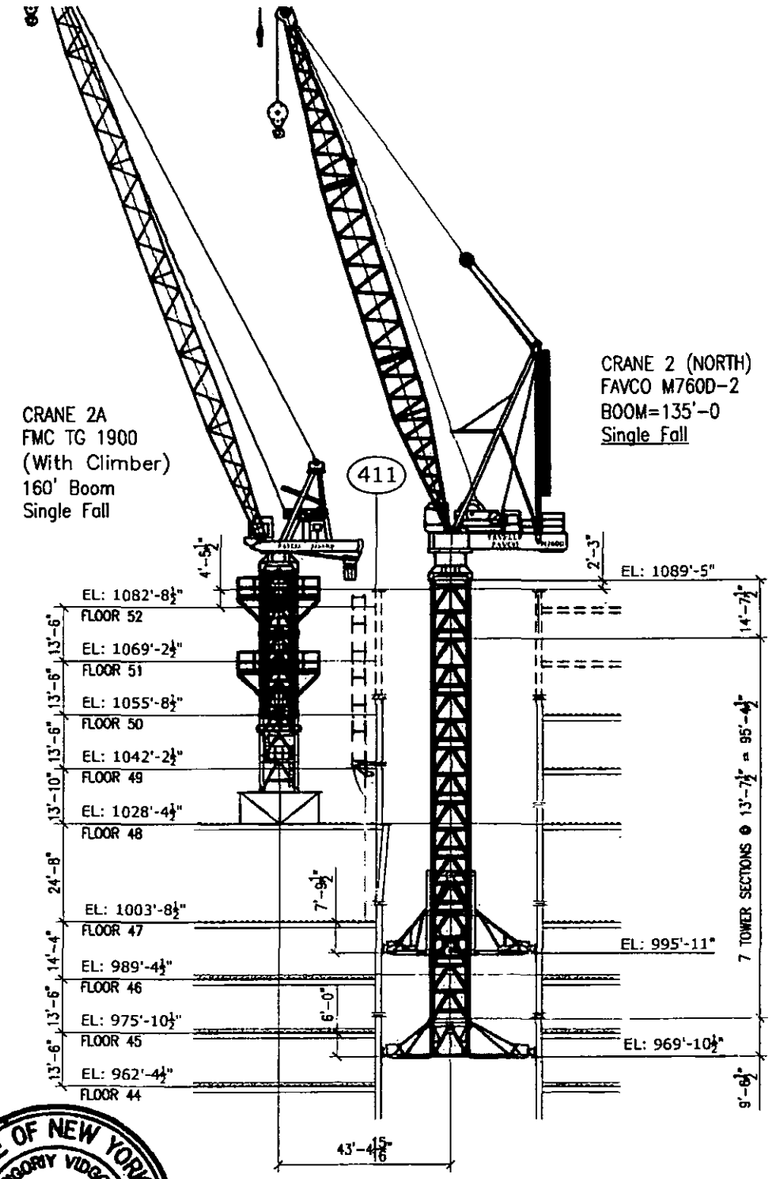

SECTION A-A

STATE OF NEW YORK
GREGORY VIDOSIC
No. 078360
LICENSED PROFESSIONAL ENGINEER
12.15.11

WORK THIS DWG.
WITH DWGs. LP-43.1, LE-27.1

REV.	DATE	DESCRIPTION
1	Dec. 15/2011	BOOM LAY DOWN LOCATION SHOWN IN DWG. LP-43.1
0	Dec. 5/2011	FOR APPROVAL

DCM Erectors, Inc.
DCM ERECTORS INC.
STRUCTURAL STEEL & MISCELLANEOUS METALS
77 Belfield Rd., Suite 100, Etobicoke, Ontario, Canada M9W 1G6, Tel: (416) 241-6967, Fax: (416) 241-3239
110 East 42nd Street, Suite 1704, New York, N.Y. 10017, Tel: (212) 599-1603, Fax: (212) 599-1615

PROJECT: WORLD TRADE CENTER - TOWER 4
SITE: 150 Greenwich Street, New York, N.Y.
CLIENT: TISHMAN CONSTRUCTION CORP.
TITLE: DISMANTLING CRANE 2 (FAVCO M760D) USING CRANE 1 & CRANE 2A
CONTRACT No: 843
DRAWN: Sam Dec. 5/2011
CHECKED:
SCALE:
BLOCK:
DRAWING No: LP-43 1

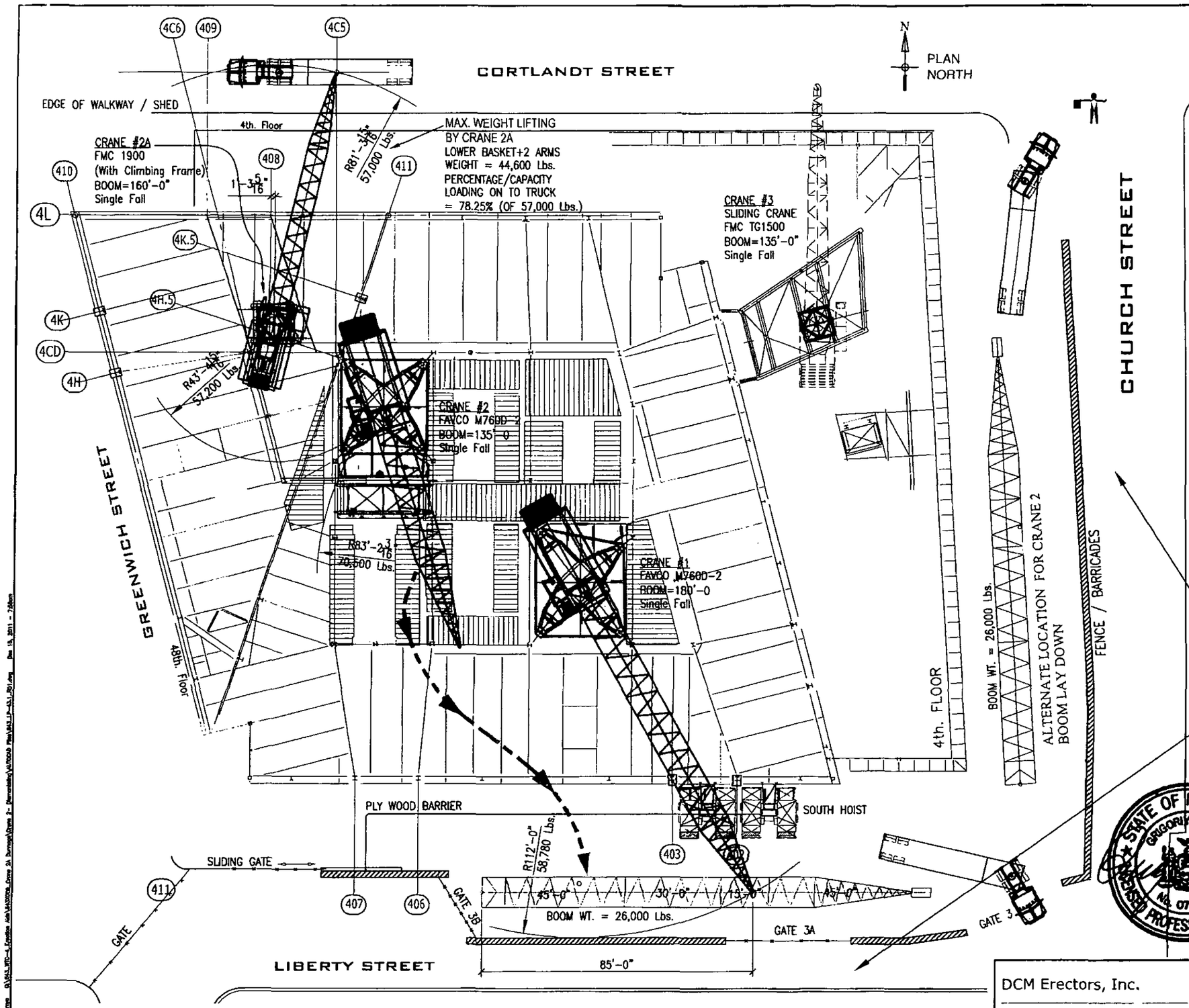

LOGISTIC PLAN
(@ 48th. FLOOR)

GENERAL NOTES

1) CONSULT OPERATORS MANUAL FOR REQUIREMENTS WHEN WIND EXCEEDS 20 m.p.h., DO NOT OPERATE IN WINDS OVER 30 m.p.h.
2) IF WINDS EXCEED 50 m.p.h., LOWER BOOM UNLESS MANUFACTURER'S INSTRUCTIONS INDICATE OTHERWISE.
3) DISMANTLING OPERATIONS ARE TO BE CONDUCTED IN ACCORDANCE WITH A.N.S.I.\ A.S.M.E. B350.5a-LATEST, APPROPRIATE OSHA RULES AND R.S. 19-2 OF THE NEW YORK CITY BUILDING CODE.
4) CRANE IS TO BE OPERATED ONLY BY NEW YORK CITY LICENSED OPERATOR.
5) THIS DISMANTLING OPERATION REQUIRES CONTROLLED INSPECTION BY NEW YORK STATE LICENSED PROFESSIONAL ENGINEER OR REGISTERED ARCHITECT (FORM 10E AND 10F).

WORK THIS DWG. WITH DWGs. LP-43

STATE OF NEW YORK
GRIGORIY VIDGOF
No. 078330
LICENSED PROFESSIONAL ENGINEER
12.15.11

REV.	DATE	DESCRIPTION
1	Dec. 15/2011	BOOM LAY DOWN LOCATION CLARIFIED
0	Dec. 14/2011	FOR REVIEW

DCM Erectors, Inc.
DCM ERECTORS INC.
STRUCTURAL STEEL & MISCELLANEOUS METALS
77 Belfield Rd., Suite 100, Etobicoke, Ontario, Canada M9W 1G6, Tel: (416) 241-6967, Fax: (416) 241-3239
110 East 42nd Street, Suite 1704, New York, N.Y. 10017, Tel: (212) 599-1603, Fax:(212) 599-1615

PROJECT:	WORLD TRADE CENTER - TOWER 4
SITE:	150 Greenwich Street, New York, N.Y.
CLIENT:	TISHMAN CONSTRUCTION CORP.
TITLE:	DISMANTLING CRANE 2 (FAVCO M760D) BOOM LAY DOWN LOCATION
CONTRACT No:	843
DRAWN:	Sam Dec. 14/2011
CHECKER:	
SCALE:	
BLOCK:	
DRAWING No:	LP-43.1 1

CRANE #1 & CRANE #2A
ARE PERMITTED TO WEATHERVANE
WITH MAIN BOOM ANGLE AS SHOWN.

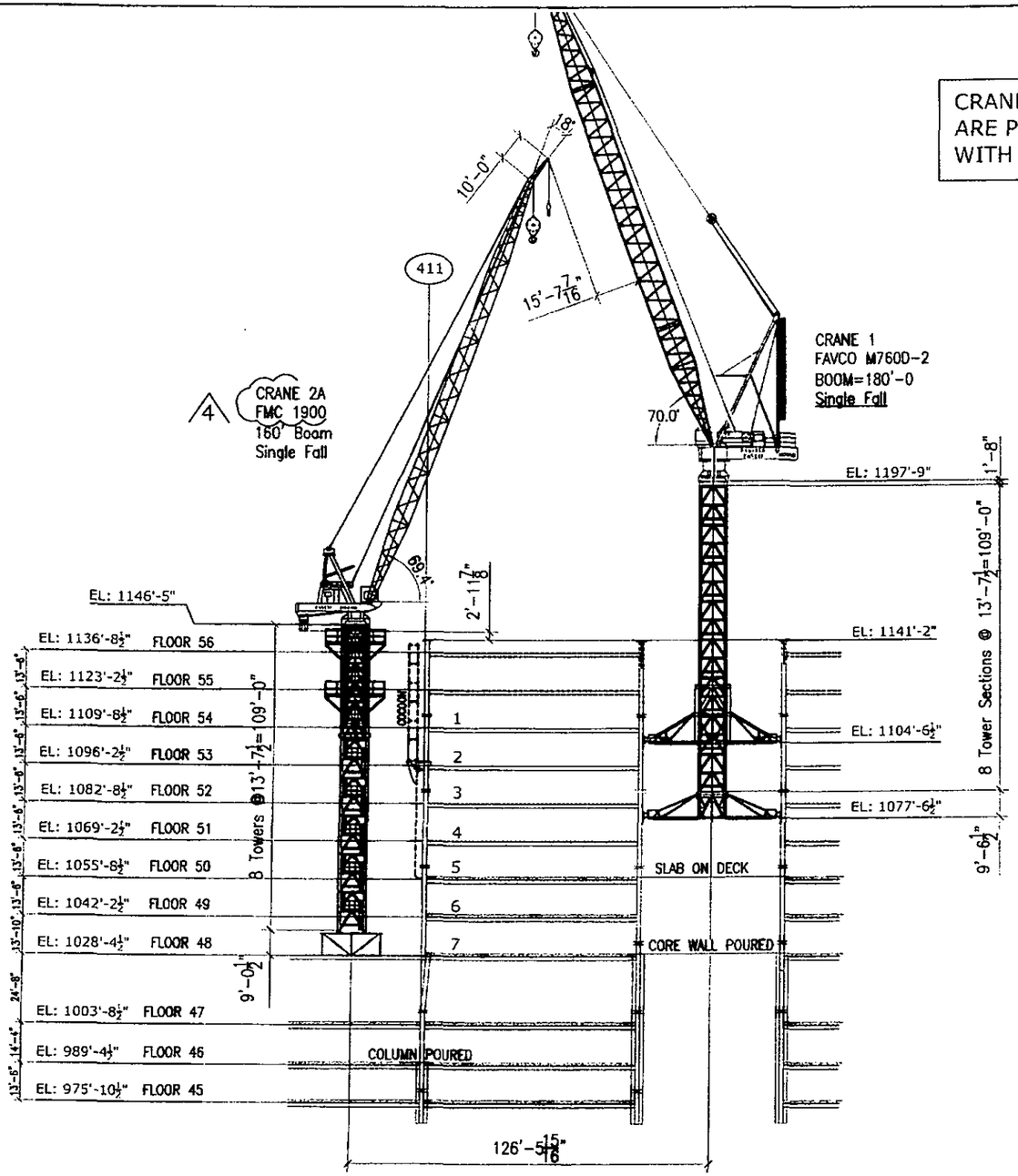

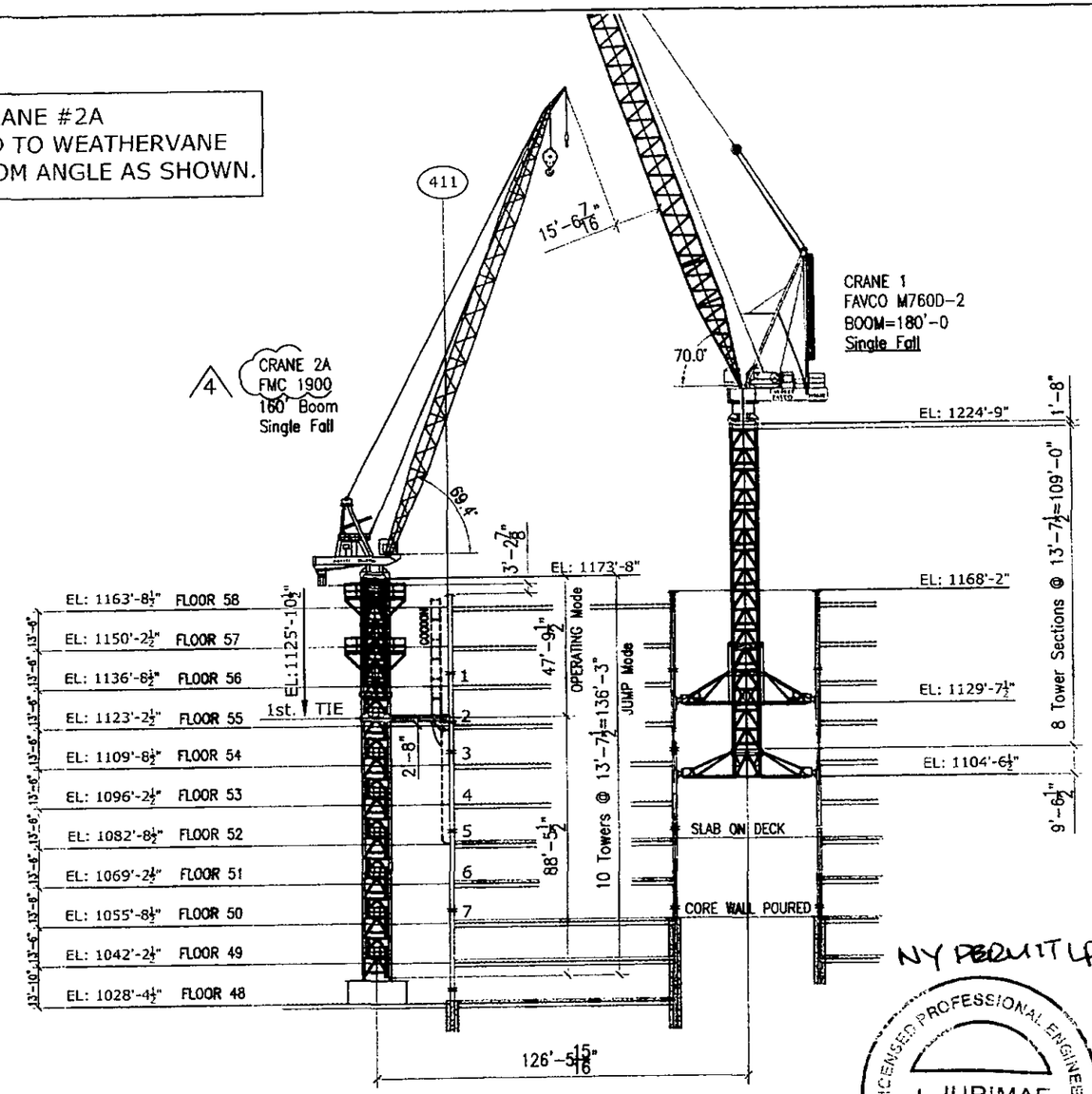

NY PERMIT LP03658

LICENSED PROFESSIONAL ENGINEER
J. JURIMAE
PROVINCE OF ONTARIO
NOV 15, 2011

SEQ. #31

1. CRANE 1 JUMPED TO 54th. FLOOR.
2. 2 MORE TOWER SECTIONS ADDED TO CRANE 2A.
3. CRANE 1 & CRANE 2A TO ERECT FLOORS 55 & 56

SEQ. #32

1. CRANE 1 JUMPED TO 56th. FLOOR.
2. 2 MORE TOWER SECTIONS ADDED TO CRANE 2A.
3. CRANE 2A - INSTALL TOWER 1st. TIE @ EL: 1125'-10½
4. CRANE 1 & CRANE 2A TO ERECT FLOORS 57 & 58

ERECT FLOORS 55, 56, 57, 58

WORK THIS DWG. WITH DWG. LP-37, LE-25.4

REV.	DATE	DESCRIPTION
4	Oct. 17/2011	CRANE 2A CORRECTED TO SHOW FMC 1900
3	Oct. 8/2011	SEQ. #32 CRANE 2A TOWER TIE LOCATION REVISED
2	Oct. 5/2011	DWG. COMPLETELY REVISED PER DISCUSSION
1	Sep. 19/2011	CRANE #2A NUMBER OF TOWER SECTIONS REVISED
0	Sep. 14/2011	FOR APPROVAL

DCM Erectors, Inc.
DCM ERECTORS INC.
STRUCTURAL STEEL & MISCELLANEOUS METALS
77 Belfield Rd., Suite 100, Etobicoke, Ontario, Canada M9W 1G6, Tel: (416) 241-6967, Fax: (416) 241-3239
110 East 42nd Street, Suite 1710, New York, N.Y. 10017, Tel: (212) 599-1603, Fax: (212) 599-1615

PROJECT:	WORLD TRADE CENTER TOWER 4
SITE:	150 Greenwich Street, New York, N.Y.
CLIENT:	TISHMAN CONSTRUCTION CORP.
TITLE:	LOGISTIC ELEVATION FOR CRANE #1 & CRANE #2A
CONTRACT No:	843
DRAWN:	Sam Sep. 14/2011
CHECKED:	
SCALE:	
BLOCK:	
DRAWING No:	LE-25.3 4

CRANE 1 & CRANE 2A
ARE PERMITTED TO WEATHERVANE
WITH MAIN BOOM ANGLE AS SHOWN.

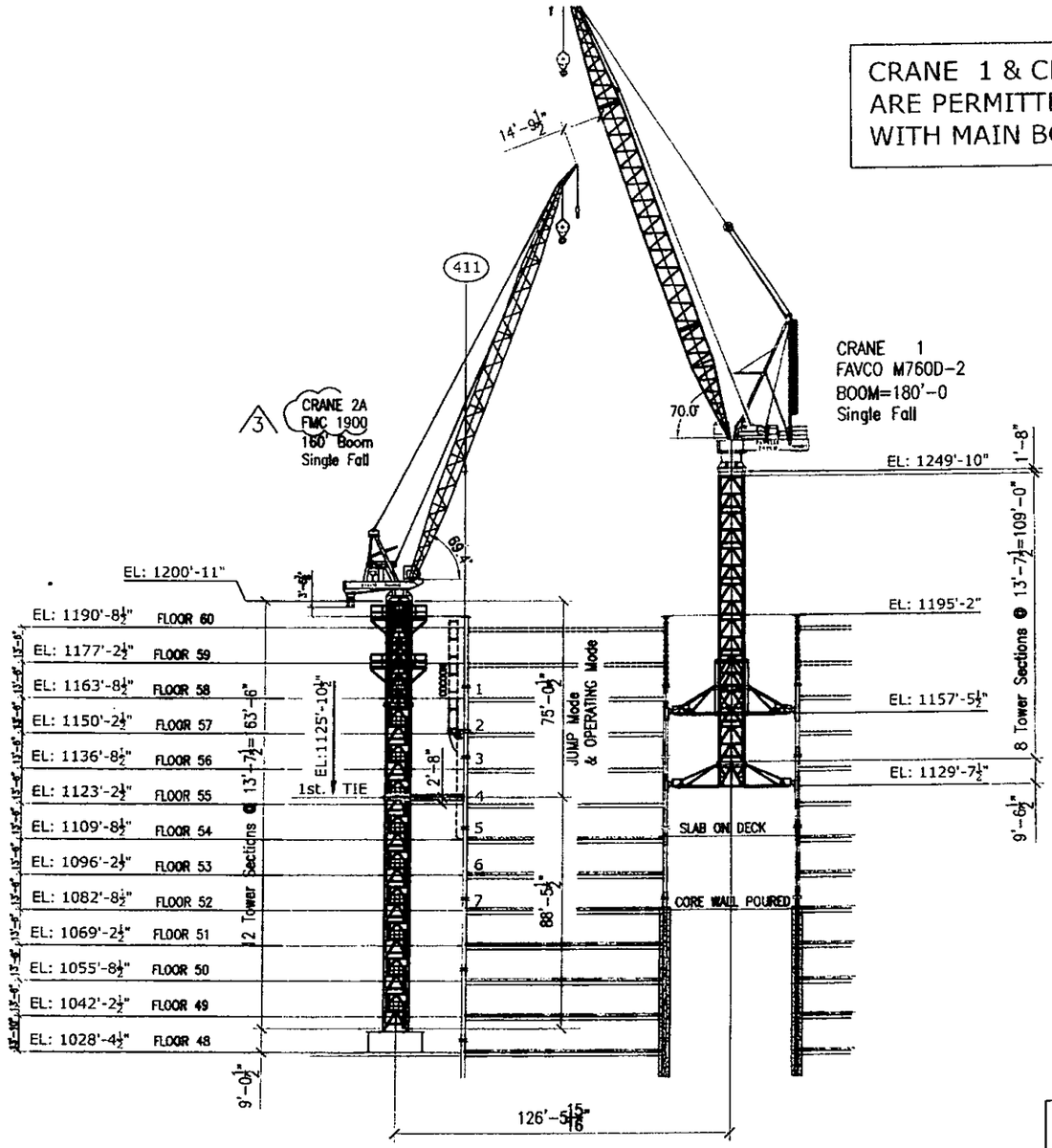

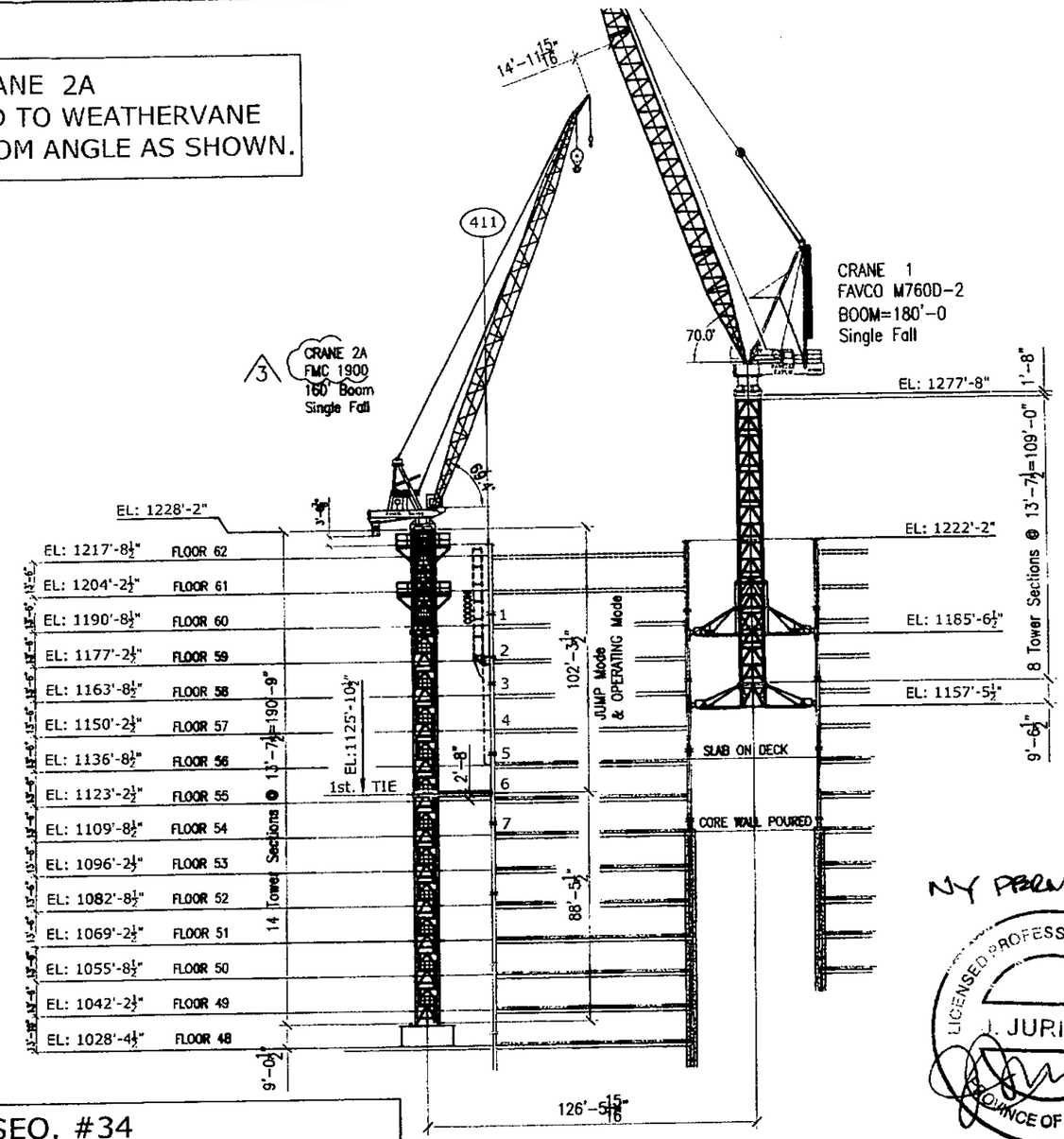

NY PERMIT LP03468

LICENSED PROFESSIONAL ENGINEER
J. JURIMAE
PROVINCE OF ONTARIO

Nov 15, 2011

SEQ. #33

1. CRANE 1 JUMPED TO 58th. FLOOR.
2. 2 MORE TOWER SECTIONS ADDED TO CRANE 2A.
3. CRANE 1 & CRANE 2A ERECT FLOORS 59 & 60.

SEQ. #34

1. CRANE 1 JUMPED TO 60th. FLOOR.
2. 2 MORE TOWER SECTIONS ADDED TO CRANE 2A.
3. CRANE 1 & CRANE 2A ERECT FLOORS 61 & 62.

ERECT FLOORS **59, 60, 61, 62**

WORK THIS DWG. WITH DWG. LP-37, LE-25.5

REV.	DATE	DESCRIPTION
3	Oct. 17/2011	CRANE 2A CORRECTED TO SHOW FMC 1900
2	Oct. 8/2011	CRANE 2A TOWER TIE LOCATION REVISED
1	Sep. 19/2011	CRANE #2A NUMBER OF TOWER SECTIONS REVISED
0	Sep. 14/2011	FOR APPROVAL

DCM Erectors, Inc.
DCM ERECTORS INC.
STRUCTURAL STEEL & MISCELLANEOUS METALS
77 Bedfield Rd., Suite 100
Etobicoke, Ontario
Canada M9W 1G6
Tel: (416) 241-6967
Fax: (416) 241-3239
110 East 42nd Street
Suite 1710
New York, N.Y. 10017
Tel: (212) 599-1603
Fax: (212) 599-1615

PROJECT:	WORLD TRADE CENTER TOWER 4
SITE:	150 Greenwich Street, New York, N.Y.
CLIENT:	TISHMAN CONSTRUCTION CORP.
TITLE:	LOGISTIC ELEVATION FOR CRANE #1 & CRANE #2A
CONTRACT No:	843
DRAWN:	Sam Sep. 14/2011
CHECKED:	
SCALE:	
SHEET:	
DRAWING No:	LE-25.4 3

CRANE #1 & CRANE #2A
ARE PERMITTED TO WEATHERVANE
WITH MAIN BOOM ANGLE AS SHOWN.

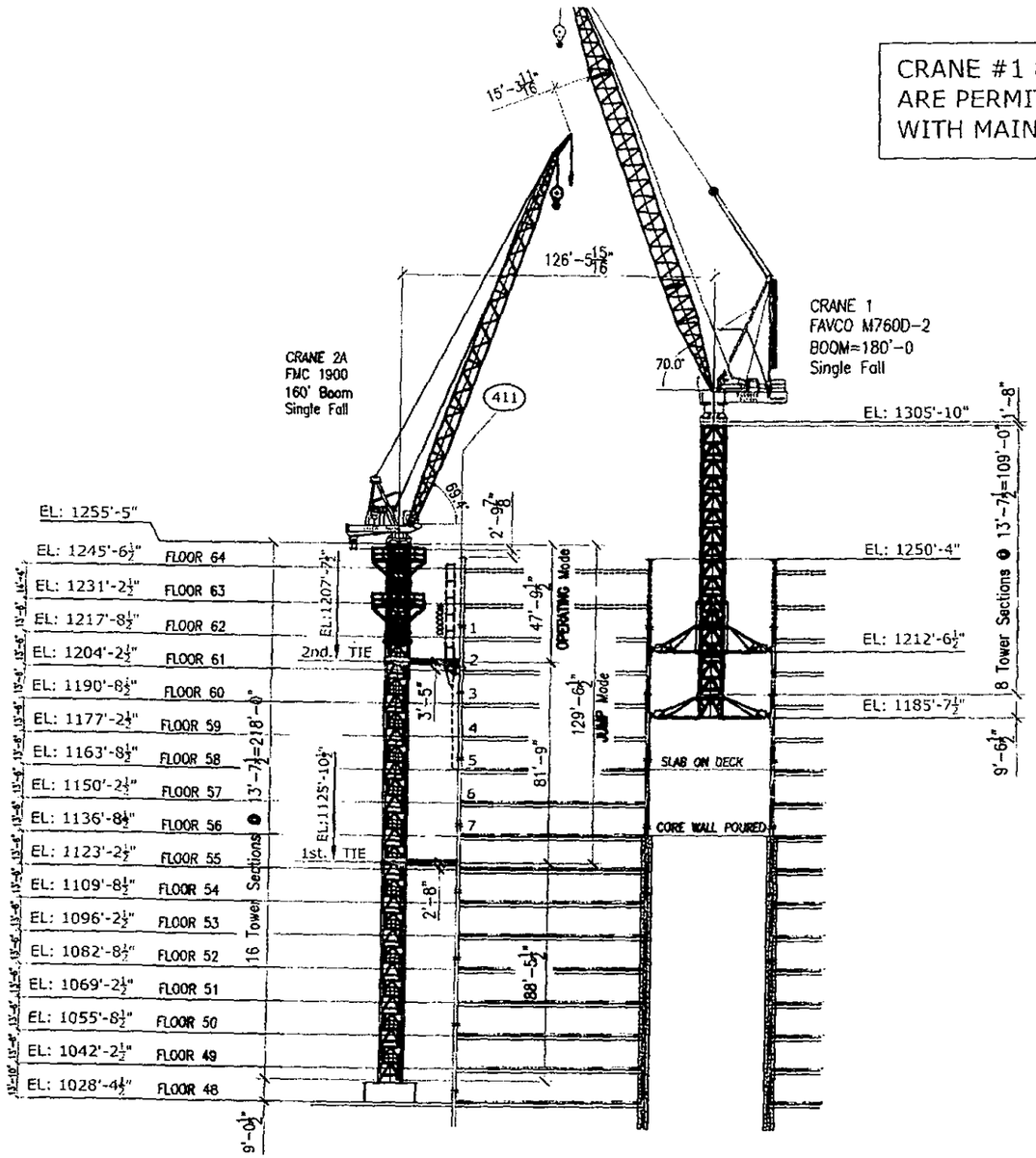

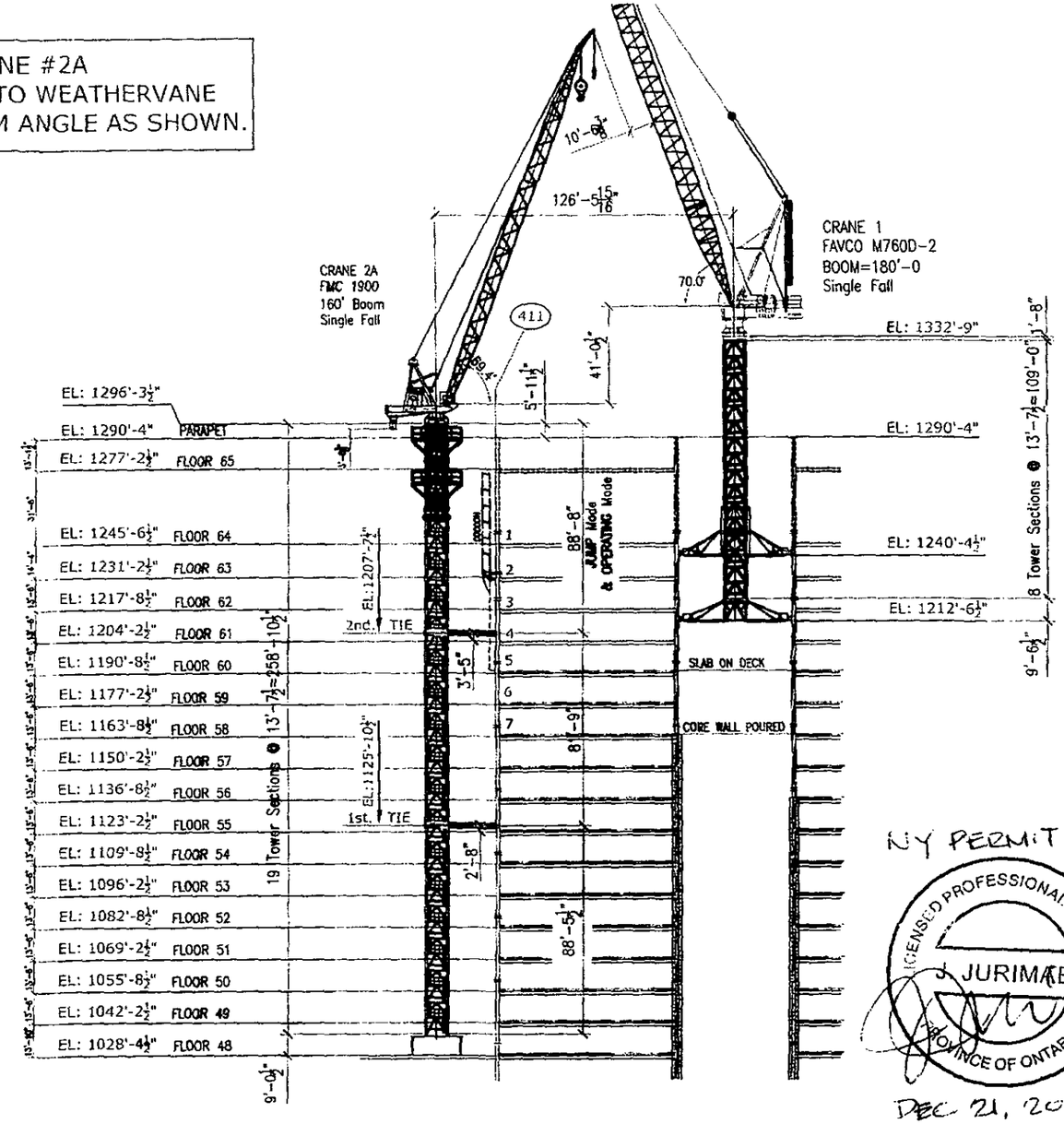

NY PERMIT LP368

LICENSED PROFESSIONAL ENGINEER
J. JURIMAE
PROVINCE OF ONTARIO

DEC. 21, 2011

SEQ. #35

1. CRANE 1 JUMPED TO 62nd. FLOOR.
2. 2 MORE TOWER SECTIONS ADDED TO CRANE 2A.
3. CRANE 2A - INSTALL TOWER 2nd. TIE @ EL: 1207'-7½ (4)
4. CRANE 1 & CRANE 2A TO ERECT FLOORS 63 & 64.

SEQ. #36

1. CRANE 1 JUMPED TO 64th. FLOOR.
2. 3 MORE TOWER SECTIONS ADDED TO CRANE 2A.
3. CRANE 1 & CRANE 2A TO ERECT FLOORS 65.

ERECT FLOORS **63, 64, 65**

WORK THIS DWG. WITH DWG. LP-37,LE-25.6

REV.	DATE	DESCRIPTION
4	Dec. 21/2011	SEQ. #35 NOTE ADDED FOR INSTALLATION OF 2nd. TIE
3	Oct. 17/2011	CRANE 2A CORRECTED TO SHOW FMC 1900
2	Oct. 8/2011	CRANE 2A TOWER TIE LOCATION REVISED
1	Sep. 19/2011	CRANE #2A NUMBER OF TOWER SECTIONS REVISED
0	Sep. 14/2011	FOR APPROVAL

DCM Erectors, Inc.
DCM ERECTORS INC.
STRUCTURAL STEEL & MISCELLANEOUS METALS
77 Belfield Rd., Suite 100, Etobicoke, Ontario, Canada M9W 1G6, Tel: (416) 241-6967, Fax: (416) 241-3239
110 East 42nd Street, Suite 1710, New York, N.Y. 10017, Tel: (212) 599-1603, Fax: (212) 599-1615

PROJECT:	WORLD TRADE CENTER TOWER 4
SITE:	150 Greenwich Street, New York, N.Y.
CLIENT:	TISHMAN CONSTRUCTION CORP.
TITLE:	LOGISTIC ELEVATION FOR CRANE #1 & CRANE #2A
CONTRACT NO:	843
DRAWN:	Sam Sep. 14/2011
CHECKED:	
SCALE:	
NOTE:	
DRAWING NO:	LE-25.5 (4)

CRANE #1 & CRANE #2A
ARE PERMITTED TO WEATHERVANE
WITH MAIN BOOM ANGLE AS SHOWN.

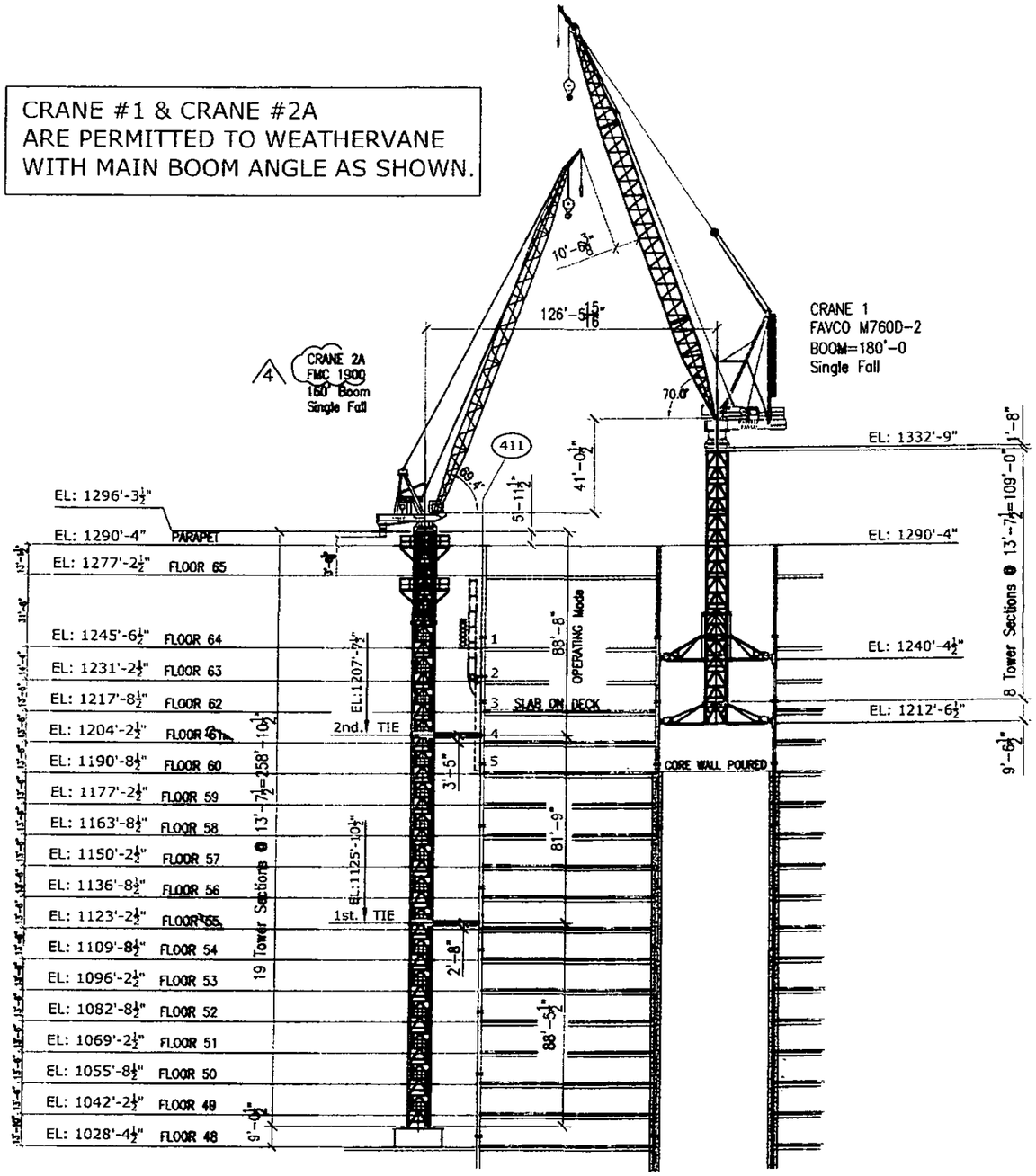

NY PERMIT LP03608

LICENSED PROFESSIONAL ENGINEER
J. JURIMAE
PROVINCE OF ONTARIO

NOV 15, 2011

ERECT FLOORS **65, 66 (ROOF) & PARAPET**

WORK THIS DWG. WITH DWG. LP-37

SEQ. #36

1. CRANE 1 STAYS AT 64th. FLOOR.
2. CRANE 1 & CRANE 2A CONTINUE ERECTING FLOORS 65, 66 (ROOF) & PARAPET.

REV.	DATE	DESCRIPTION
3	Oct. 17/2011	CRANE 2A CORRECTED TO SHOW FMC 1900
2	Oct. 8/2011	CRANE 2A TOWER TIE LOCATION REVISED
1	Oct. 5/2011	DWG. UPDATED FOR FINAL STAGE
0	Sep. 19/2011	FOR APPROVAL

DCM Erectors, Inc.
DCM ERECTORS INC.
STRUCTURAL STEEL & MISCELLANEOUS METALS
77 Belfield Rd., Suite 100
Etobicoke, Ontario
Canada M9W 1G6
Tel: (416) 241-6967
Fax: (416) 241-3739
110 East 42nd Street
Suite 1710
New York, N.Y. 10017
Tel: (212) 599-1603
Fax:(212) 599-1615

PROJECT:	WORLD TRADE CENTER TOWER 4
SITE:	150 Greenwich Street, New York, N.Y.
CLIENT:	TISHMAN CONSTRUCTION CORP.
TITLE:	LOGISTIC ELEVATION FOR CRANE #1 & CRANE #2A
CONTRACT NO:	843
DRAWN:	Sam Sep. 19/2011
CHECKED:	
SCALE:	
BLOCK:	
DRAWING NO:	LE-25.6 3

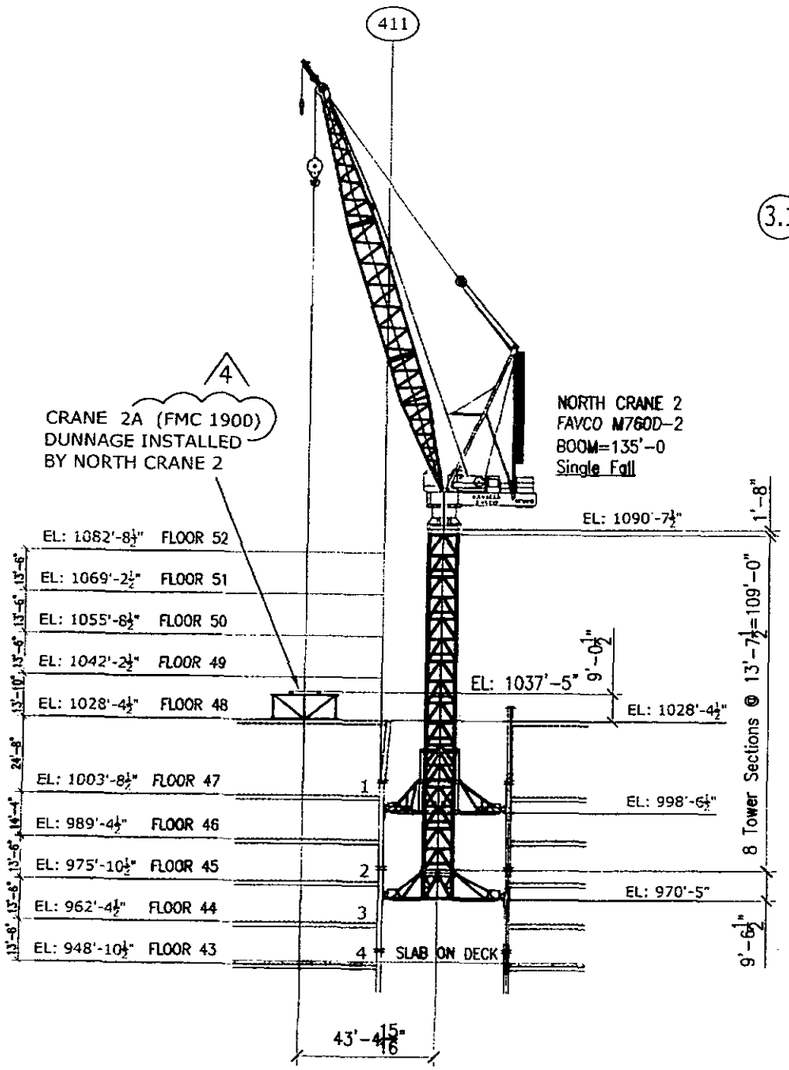

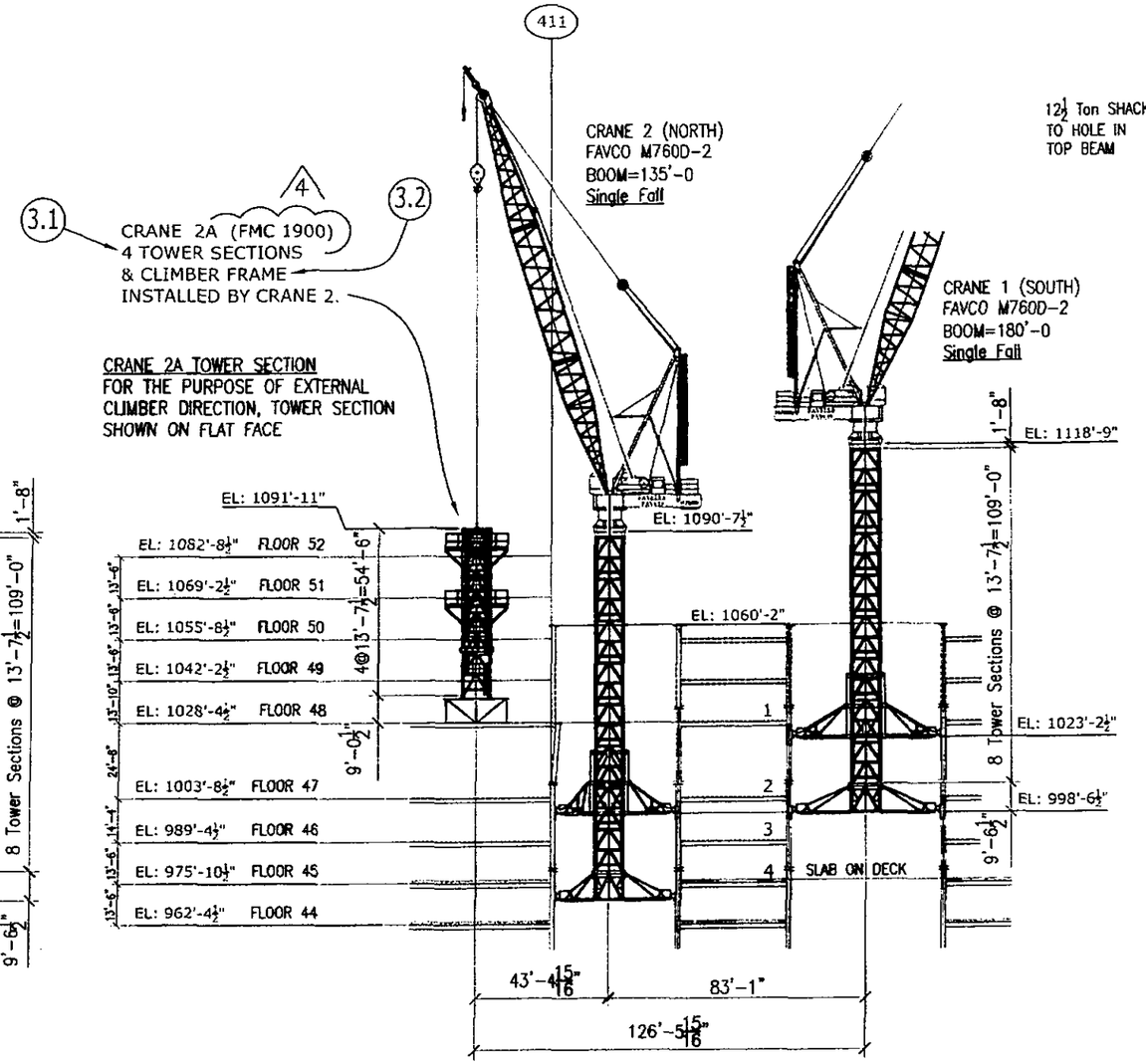

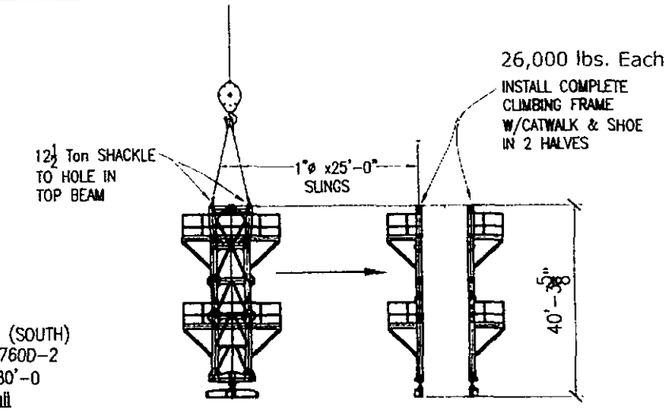

4
3.2 FMC 1900 Ext. CLIMBER
(SIM. RIGGING FOR EACH FRAME)

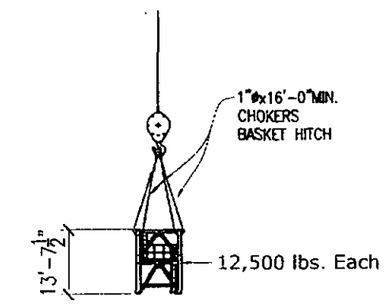

3.1 13'-7½ TOWER LIFTING

NY PERMIT LP0268

LICENSED PROFESSIONAL ENGINEER
J. JURIMAE
PROVINCE OF ONTARIO

NOV 15, 2011

SEQ. #27

1. CRANE 1 & CRANE 2 JUMPED TO 47th. FLOOR.
2. CRANE 1 & CRANE 2 ERECT 48th. FLOOR.
3. CRANE 2A DUNNAGE INSTALLED BY NORTH CRANE 2

SEQ. #28

1. CRANE 1 JUMPED TO 48th. FLOOR.
2. CRANE 2 STAYS AT 47th FLOOR
3. CRANE 2A - 4 TOWER SECTIONS & CLIMBER INSTALLED BY CRANE 2. (SEE 3.1 & 3.2)
4. CRANE 1 & CRANE 2 ERECT FLOORS 49 & 50.

ERECT FLOORS **48, 49, 50**

WORK THIS DWG. WITH DWG. LP-37, LE-25.2

REV.	DATE	DESCRIPTION
4	Oct. 17/2011	CRANE 2A CORRECTED TO SHOW FMC 1900
3	Oct. 8/2011	CRANE 2 BOOM ANGLE DELETED
2	Oct. 4/2011	DWG. COMPLETELY REVISED PER DISCUSSION
1	Sep. 19/2011	CRANE #2A TG1900 . CD # & SRL # SHOWN
0	Sep. 14/2011	FOR APPROVAL

DCM Erectors, Inc.
DCM ERECTORS INC.
STRUCTURAL STEEL & MISCELLANEOUS METALS
77 Belfield Rd., Suite 100, Etobicoke, Ontario, Canada M9W 1G6, Tel: (416) 241-6967, Fax: (416) 241-3239
110 East 42nd Street, Suite 1710, New York, N.Y. 10017, Tel: (212) 599-1603, Fax:(212) 599-1615

PROJECT:	WORLD TRADE CENTER TOWER 4
SITE:	150 Greenwich Street, New York, N.Y.
CLIENT:	TISHMAN CONSTRUCTION CORP.
TITLE:	LOGISTIC ELEVATION FOR CRANE #2 & CRANE #2A
CONTRACT NO:	843
DRAWN:	Sam Sep. 14/2011
CHECKED:	
SCALE:	
DATE:	
DRAWING NO:	LE-25.1 4

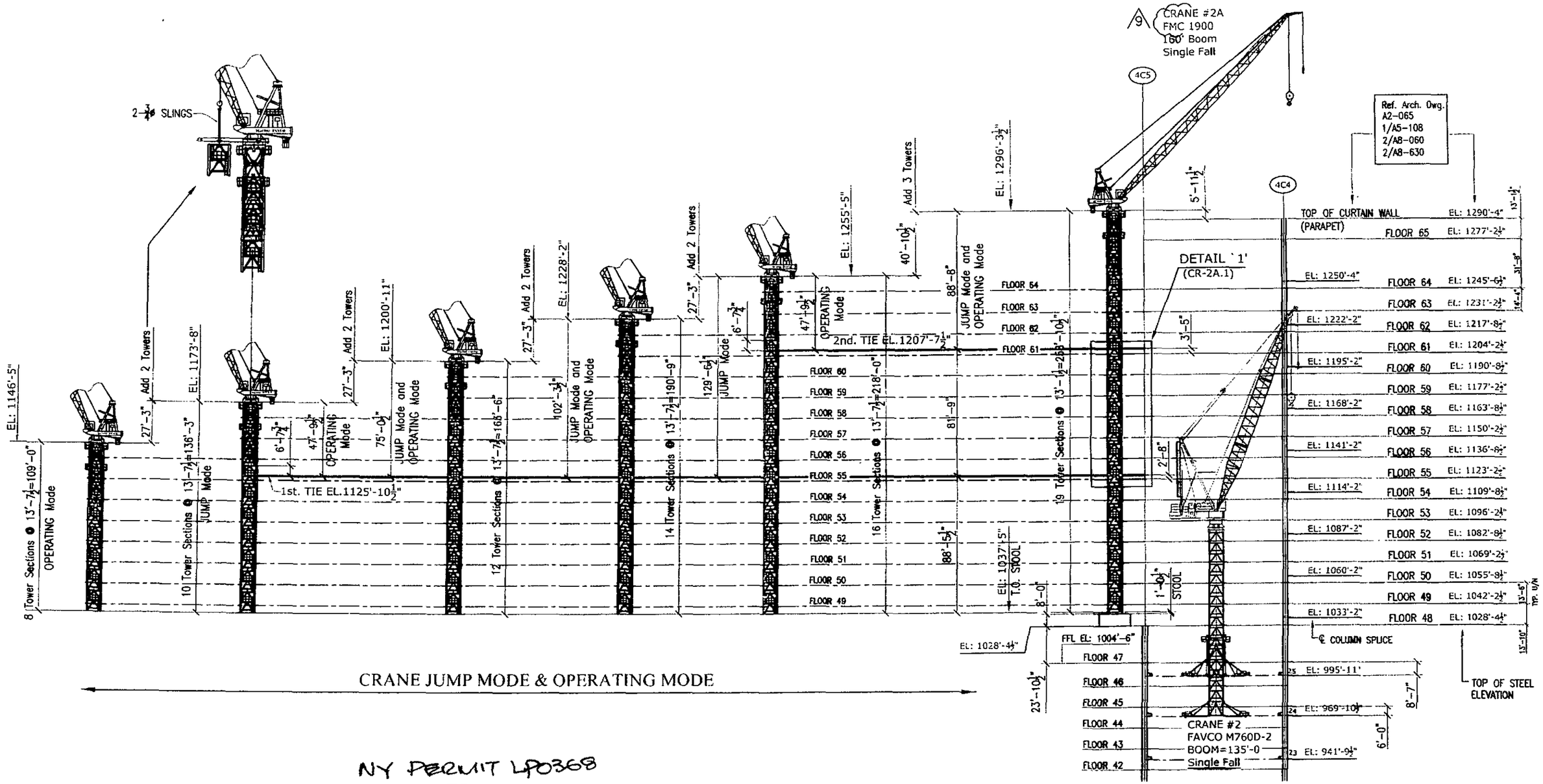

NY PERMIT LP0368

LICENSED PROFESSIONAL ENGINEER
J. JURIMAE
PROVINCE OF ONTARIO

NOV 15, 2011

CRANE - 2A

ELEVATION LOOKING NORTH

WORK THIS DWG. WITH DWG. CR-2A.1

REV.	DATE	DESCRIPTION
9	Oct. 17/2011	CRANE 2A CORRECTED TO SHOW FMC 1900
8	Oct. 8/2011	NUMBER OF TOWER SECTIONS REVISED IN JUMPS
7	Aug.23/2011	TOWER SECTIONS REDUCED TO 19 FROM 20
6	Aug.15/2011	CRANE CHANGED TO FAVCO 1900
5	July 11/2011	CRANE TOWER SECTION ROTATED BY 90 DEG.
4	Mar. 25/2011	1-FAVCO 760 TOWER ADDED (For Collar to clear Ext. Climber)

DCM Erectors, Inc.
DCM ERECTORS INC.
STRUCTURAL STEEL & MISCELLANEOUS METALS
77 Belfield Rd., Suite 100
Etobicoke, Ontario
Canada M9W 1G6
Tel: (416) 241-6967
Fax: (416) 241-3239
110 East 42nd Street
Suite 1710
New York, N.Y. 10017
Tel: (212) 599-1603
Fax: (212) 599-1615

PROJECT:	WORLD TRADE CENTER TOWER 4
SITE:	150 Greenwich Street, New York, N.Y.
CLIENT:	TISHMAN CONSTRUCTION CORP.
TITLE:	CRANE #2A ABOVE 48th. FLOOR 9 FMC 1900 TOWER SECTION+CLIMBER
CONTRACT No:	843
DRAWN:	Sam Aug.25/2010
CHECKED:	
SCALE:	
BLOCK:	
DRAWING No:	CR-2A 9

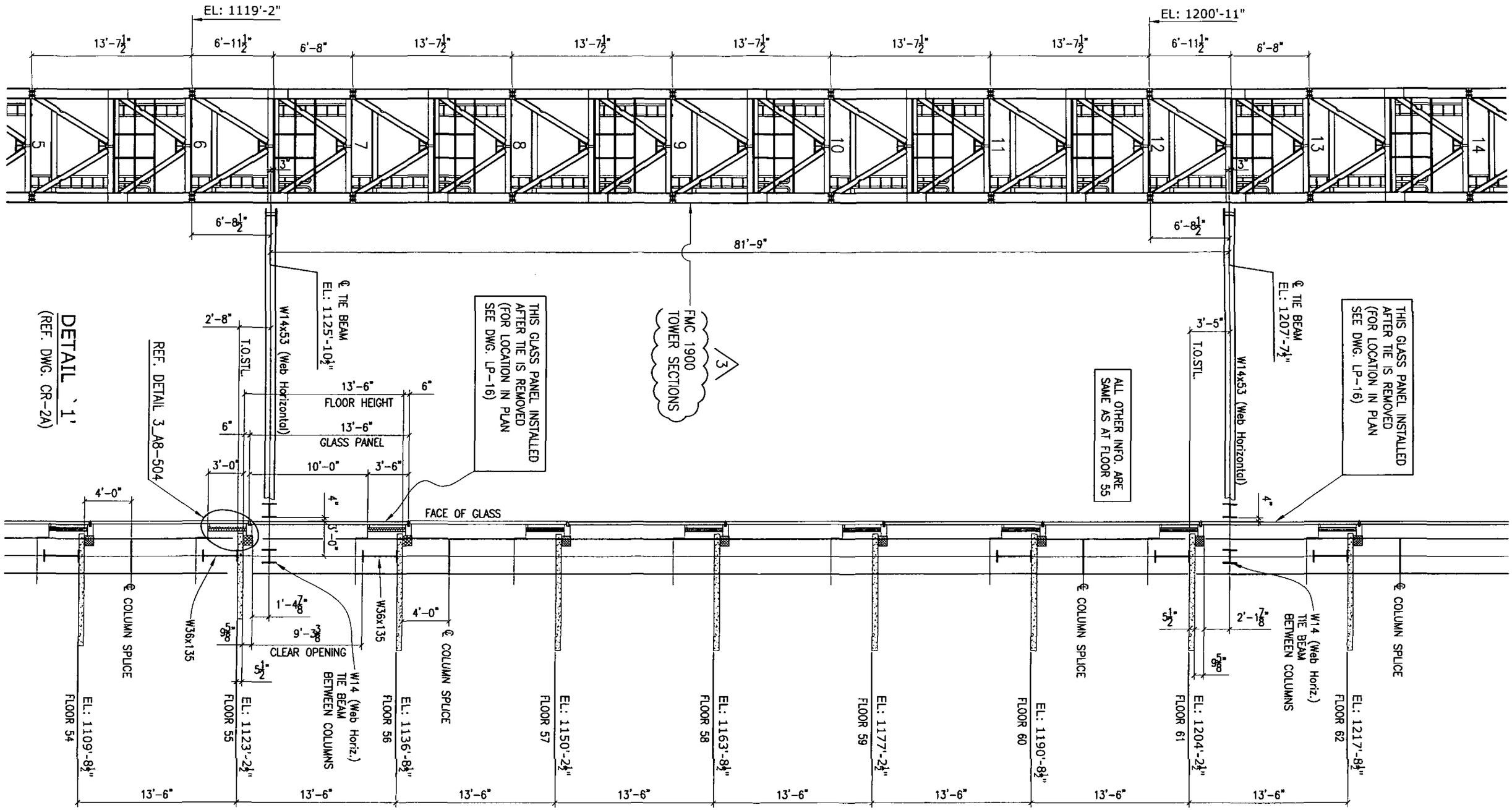

WORK THIS DWG. WITH DWG. CR-2A

REV.	DATE	DESCRIPTION
3	Oct. 17/2011	CRANE 2A CORRECTED TO SHOW FMC 1900
2	Aug. 16/2011	TOWER SECTION CHANGED TO TG1900 & TIE LOCATION REVISED
1	July 11/2011	CRANE TOWER SECTION ROTATED BY 90 DEG.
0	Mar. 20/2011	FOR APPROVAL

DCM Erectors, Inc.
DCM ERECTORS INC.
STRUCTURAL STEEL & MISCELLANEOUS METALS
77 Belfield Rd., Suite 100
Etobicoke, Ontario
Canada M9W 1G6
Tel: (416) 241-6967
Fax: (416) 241-3239
110 East 42nd Street
Suite 1710
New York, N.Y. 10017
Tel: (212) 599-1603
Fax:(212) 599-1615

PROJECT: WORLD TRADE CENTER TOWER 4
SITE: 150 Greenwich Street, New York, N.Y.
CLIENT: TISHMAN CONSTRUCTION CORP.
TITLE: CRANE #2A ABOVE 48th. FLOOR
3 FMC 1900 COLLAR & TIE ELEVATIONS
CONTRACT No: 843
DRAWN: Sam March 20/2011
CHECKER:
SCALE:
BLOCK:
DRAWING No: CR-2A.1 3

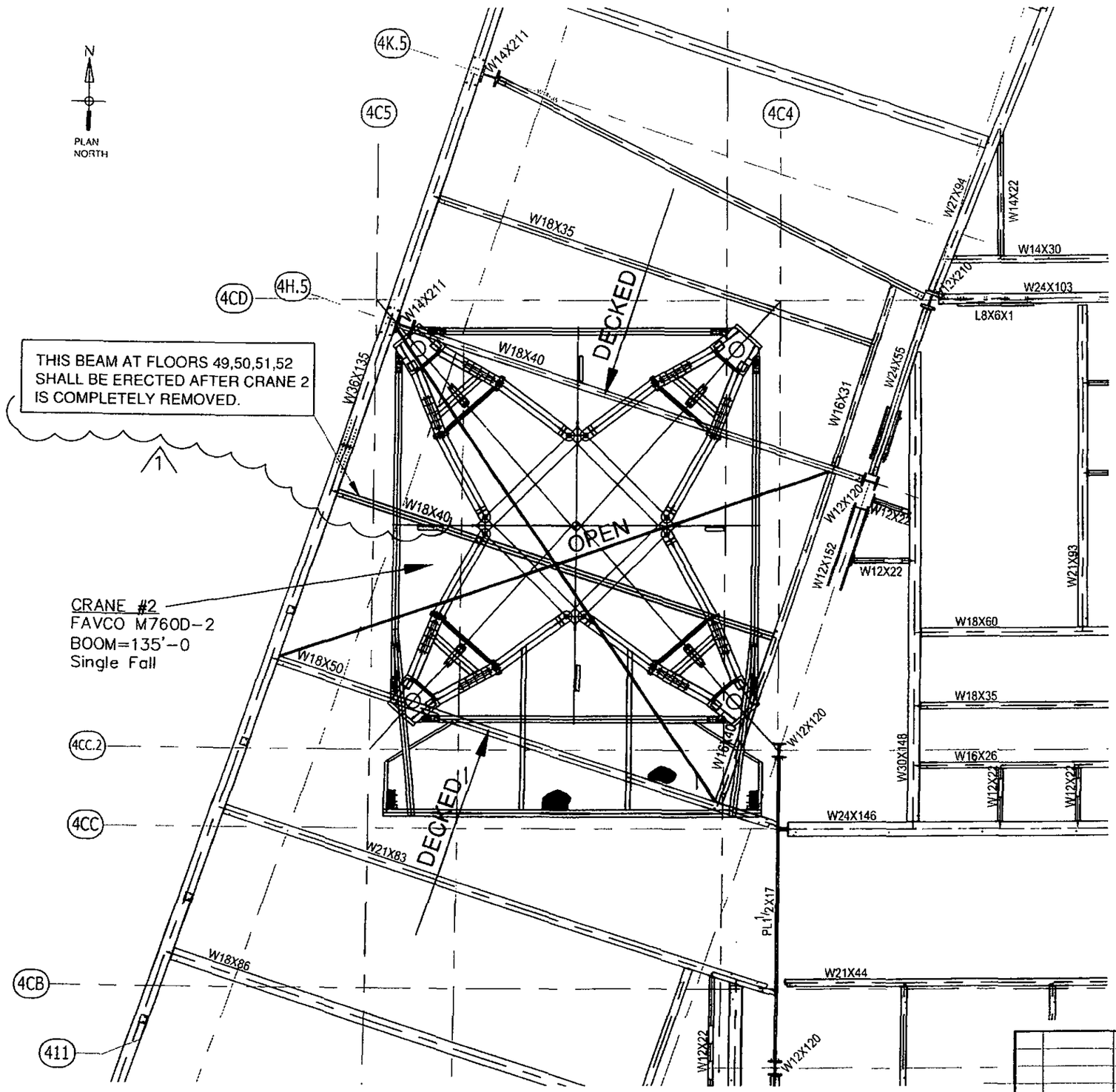

PARTIAL PLAN @ 49th. Thru. 52nd. FLOOR

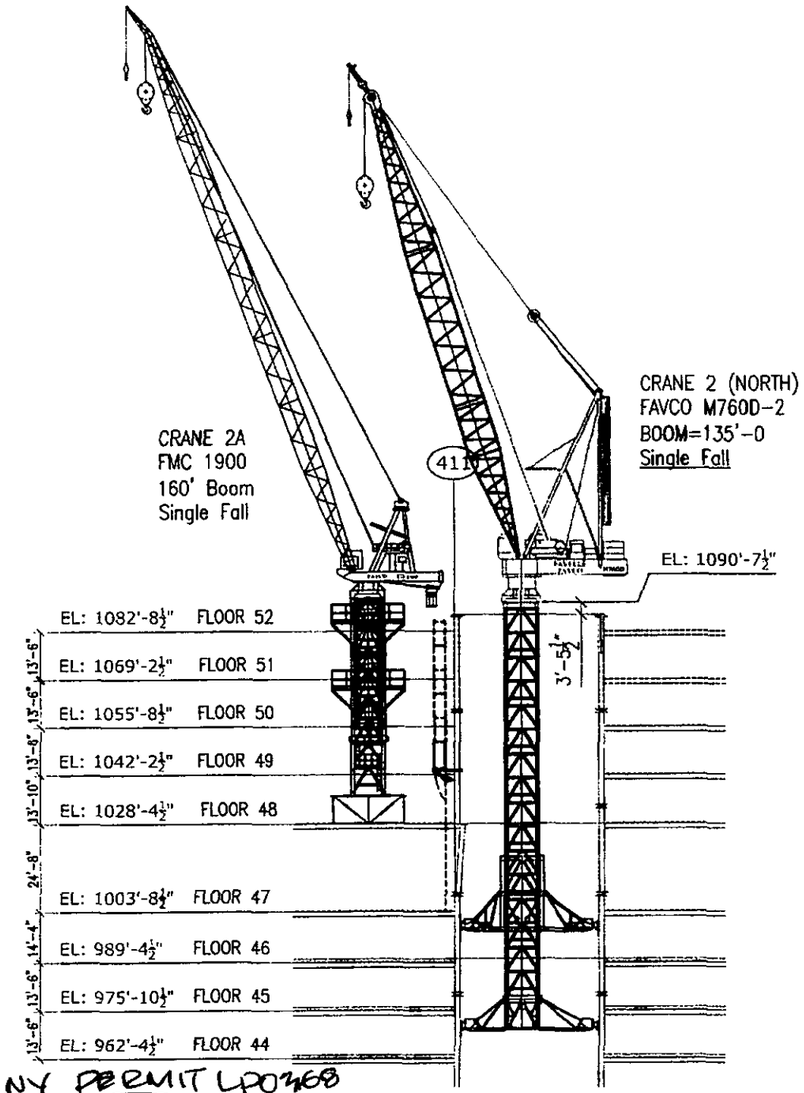

NY PERMIT LP0368

ELEVATION LOOKING NORTH

LICENSED PROFESSIONAL ENGINEER
J. JURIMAE
PROVINCE OF ONTARIO
NOV 15, 2011

REV.	DATE	DESCRIPTION
1	Nov. 11/2011	LEAVE OUT BEAM REVISED TO ONE BEAM ONLY
0	Nov. 10/2011	FOR APPROVAL

DCM Erectors, Inc.
DCM ERECTORS INC.
STRUCTURAL STEEL & MISCELLANEOUS METALS
77 Belfield Rd., Suite 100
Etobicoke, Ontario
Canada M9W 1G6
Tel: (416) 241-6967
Fax: (416) 241-3239
110 East 42nd Street
Suite 1704
New York, N.Y. 10017
Tel: (212) 599-1603
Fax: (212) 599-1615

PROJECT:	WORLD TRADE CENTER - TOWER 4
SITE:	150 GREENWICH STREET, NEW YORK, N.Y.
CLIENT:	TISHMAN CONSTRUCTION CORP.
TITLE:	FLOOR 49th. Thru. 52ND. FRAMING WITH CRANE 2 IN PLACE
CONTRACT No:	843
DRAWN:	Sam Nov. 10/2011
CHECKED:	
SCALE:	
BLOCK:	
DRAWING No:	FLR_49-52 1

Printed By: ASDA/samyc Q:\843_WTC-4_Erection Aids\843X009_Crane 2A Dunnage\DCM Logistics Dwg's\AutoCAD Files\843_FLR_49-52_R01.dwg Nov 11, 2011 - 11:48am

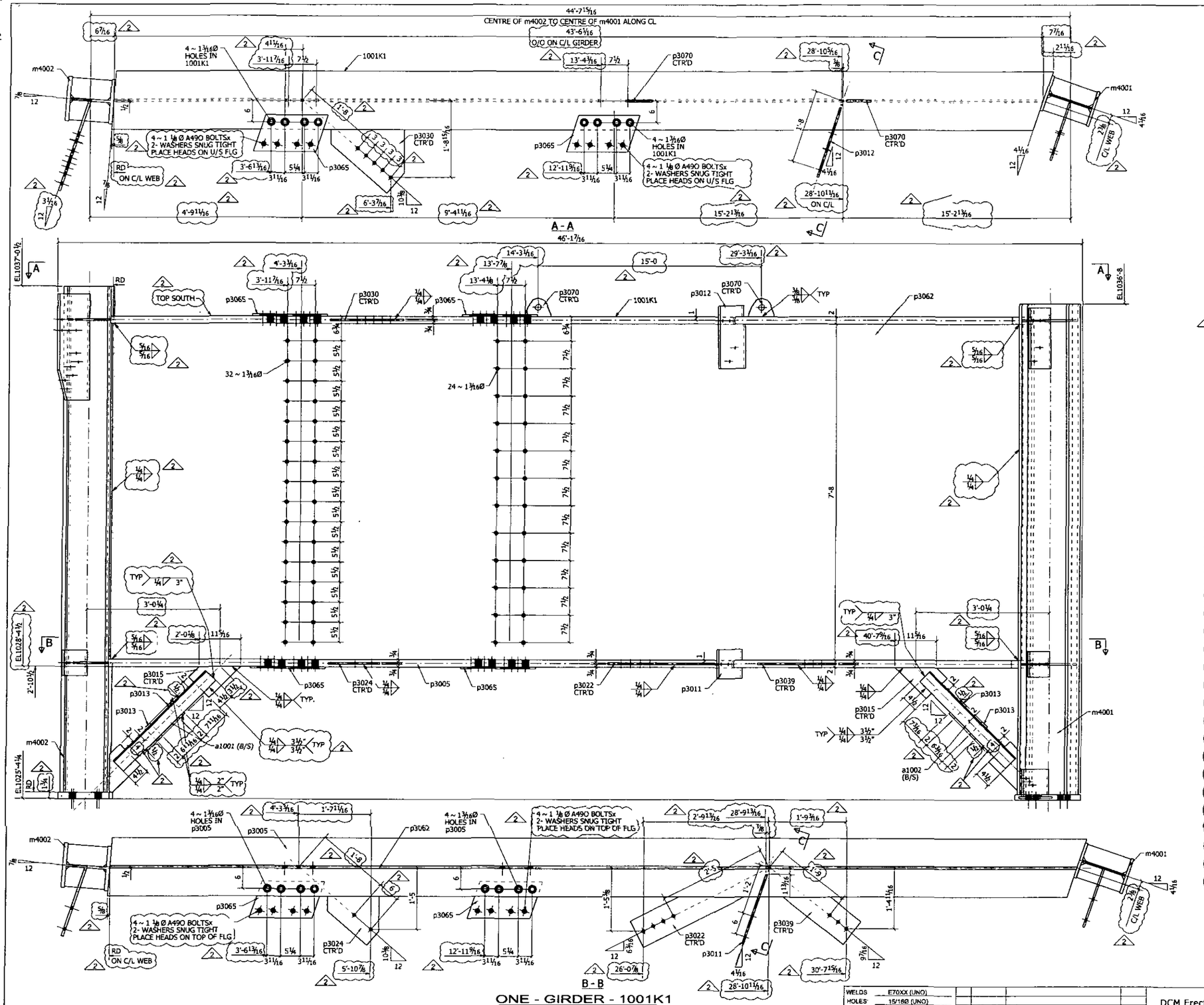

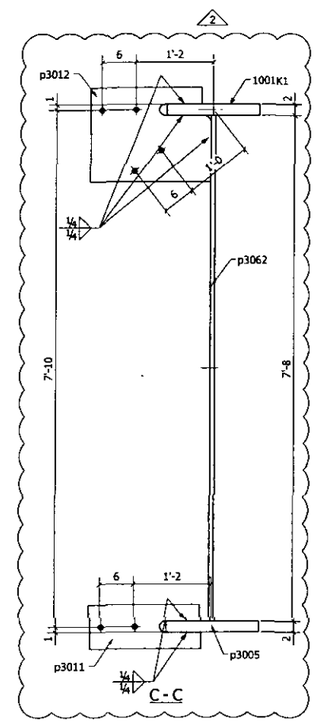

NO PAINT WITH IN 3" OF ALL OPEN HOLES

WORK THIS DWG WITH 1001A & CW1001

BILL OF MATERIAL

NO OF PCS	SHIP MK	PIECE MK	DESCRIPTION	LENGTH ft - in	MATERIAL SPEC. A992 GRADE	FINISH	ABM	BLK NO.	BLK QTY.	REMARKS
1	1001K1		PL2"X16"	43'-9 3/8"	A572-GR.50					REF DWG#CW1001
2		a1001	L4X3X5/16	2'-11 1/8"	A36					
2		a1002	L4X3X5/16	2'-9 1/2"	A36					
1		p3004	PL1 1/2"X11"	1'-3"	A572-GR.50					
1		p3005	PL2"X16"	43'-9 3/8"	A572-GR.50					REF DWG#CW1001
1		p3009	PL5/8"X25 3/4"	2'-5"	A572-GR.50					SHAPE,BEV-1E
1		p3010	PL5/8"X7"	1'-7 3/4"	A572-GR.50					BEV-1E
1		p3011	PL1/2"X8"	1'-8"	A572-GR.50					
1		p3012	PL1/2"X17 1/8"	1'-9 11/16"	A572-GR.50					SHAPE,BEV-1E
4		p3013	PL1/2"X2"	0'-5"	A572-GR.50					
4		p3014	PL1/2"X4 1/2"	1'-0 9/16"	A572-GR.50					CLIP-3C
2		p3015	PL1/2"X8"	1'-0"	A572-GR.50					SHAPE
1		p3016	PL1/2"X8 1/16"	1'-0 5/16"	A572-GR.50					SHAPE,BEV-1E
1		p3017	PL1/2"X8 7/16"	1'-1 3/16"	A572-GR.50					SHAPE
1		p3018	PL1/2"X7"	1'-4 3/4"	A572-GR.50					
1		p3019	PL1/2"X7 1/2"	1'-9"	A572-GR.50					
1		p3022	PL1/2"X8"	2'-8 5/16"	A572-GR.50					SHAPE
1		p3024	PL1/2"X12 1/4"	1'-4 13/16"	A572-GR.50					SHAPE
1		p3030	PL1/2"X16 3/16"	1'-10 13/16"	A572-GR.50					
1		p3039	PL1/2"X8"	1'-9 3/16"	A572-GR.50					SHAPE
1		p3041	PL1/2"X16 5/8"	1'-4 3/4"	A572-GR.50					
1		p3048	PL1 3/4"X13"	1'-2"	A572-GR.50					
1		p3062	PL3/4"X92"	43'-6 1/4"	A572-GR.50					REF DWG#CW1001
4		p3063	PL1/2"X5 1/2"	0'-10 15/16"	A572-GR.50					
4		p3065	PL1/2"X10"	1'-8 1/4"	A572-GR.50					SHAPE
1		p3069	PL1/2"X8"	0'-10"	A572-GR.50					
2		p3070	PL5/8"X5"	0'-7"	A572-GR.50					
1		m4001	W14X68	11'-2 1/4"	A992-GR.50					SQ_1E
1		m4002	W12X106	11'-6 1/2"	A992-GR.50					SQ_1E

CONTRACT 843X009
DRAWING 1001

ONE - GIRDER - 1001K1

SHOPNOTE:- REUSE EXISTING PLATE GIRDER BU424 REF DWG#CW1001

WELDS: E70XX (UNO)
HOLES: 15/16Ø (UNO)
FINISH: SSPC - SP3 (UNO)
SHOP PAINT: #3 ONE CT STD. PR (UNO)
NOTES:
REF. DWGS.: E1001 & E1002

	DATE	DESCRIPTION	XNO
3	09/22/11	Revised As Per Approver Comments	
2	09/05/11	For Fabrication	
1	08/29/11	For Approval	

DCM Erectors, Inc.

STRUCTURAL STEEL & MISCELLANEOUS METALS

77 Belfield Rd., Suite 100, Etobicoke, Ontario, Canada M9W 1G6, Tel: (416) 241-8967, Fax: (416) 241-3238

110 EAST 42nd STREET, SUITE 1710, NEW YORK, NY 10017, Tel: (212) 599-1803, Fax: (212) 599-1915

PROJECT.	WORLD TRADE CENTER, TOWER 4
SITE.	NEW YORK, N.Y.
CLIENT.	TISHMAN CONSTRUCTION CORP. OF N.Y.
TITLE:	PLATE GIRDER
CONTRACT No.	843X009
DRAWN: SJK	CHECKER: SBR
DRAWING No	1001
SCALE: NTS	BLOCK:

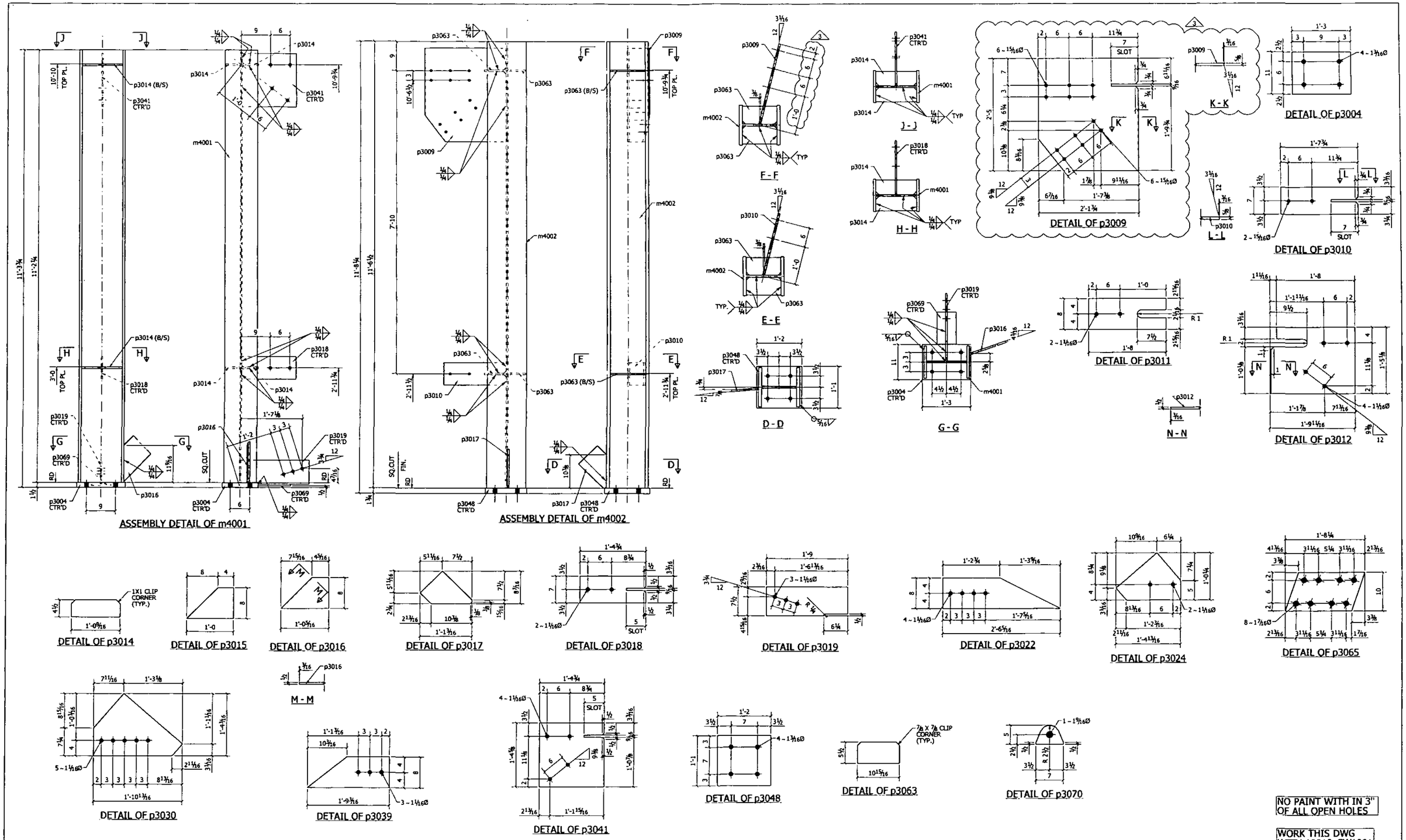

WELDS	E70XX (UNO)		
HOLES	15/16Ø (UNO)		
FINISH	SSPC - SP3 (UNO)		
SHOP PAINT	1 CONE CT STD. PR (UNO)		
NOTES:			
REF. DWGS :	E1001 & E1002		

DATE	DESCRIPTION	XNO
08/27/11	Revised As Noted	
08/22/11	Revised As Per Approver Comments	
08/05/11	For Fabrication	
08/29/11	For Approval	

DCM Erectors, Inc.

DCM ERECTORS INC

STRUCTURAL STEEL & MISCELLANEOUS METALS

77 Bedford Rd., Suite 100, Etobicoke, Ontario, Canada M8W 1G6, Tel: (416) 241-6867, Fax: (416) 241-3239

110 EAST 42nd STREET, SUITE 1710, NEW YORK, NY 10017, Tel: (212) 986-1803, Fax: (212) 680-1615

PROJECT:	WORLD TRADE CENTER, TOWER 4
SITE	NEW YORK, N.Y.
CLIENT.	TISHMAN CONSTRUCTION CORP. OF N.Y.
TITLE:	SECTIONS & DETAILS
CONTRACT No	843X009
DRAWN SJK	CHECKER. SBR
DRAWING No	1001A
SCALE. NTS	BLOCK:

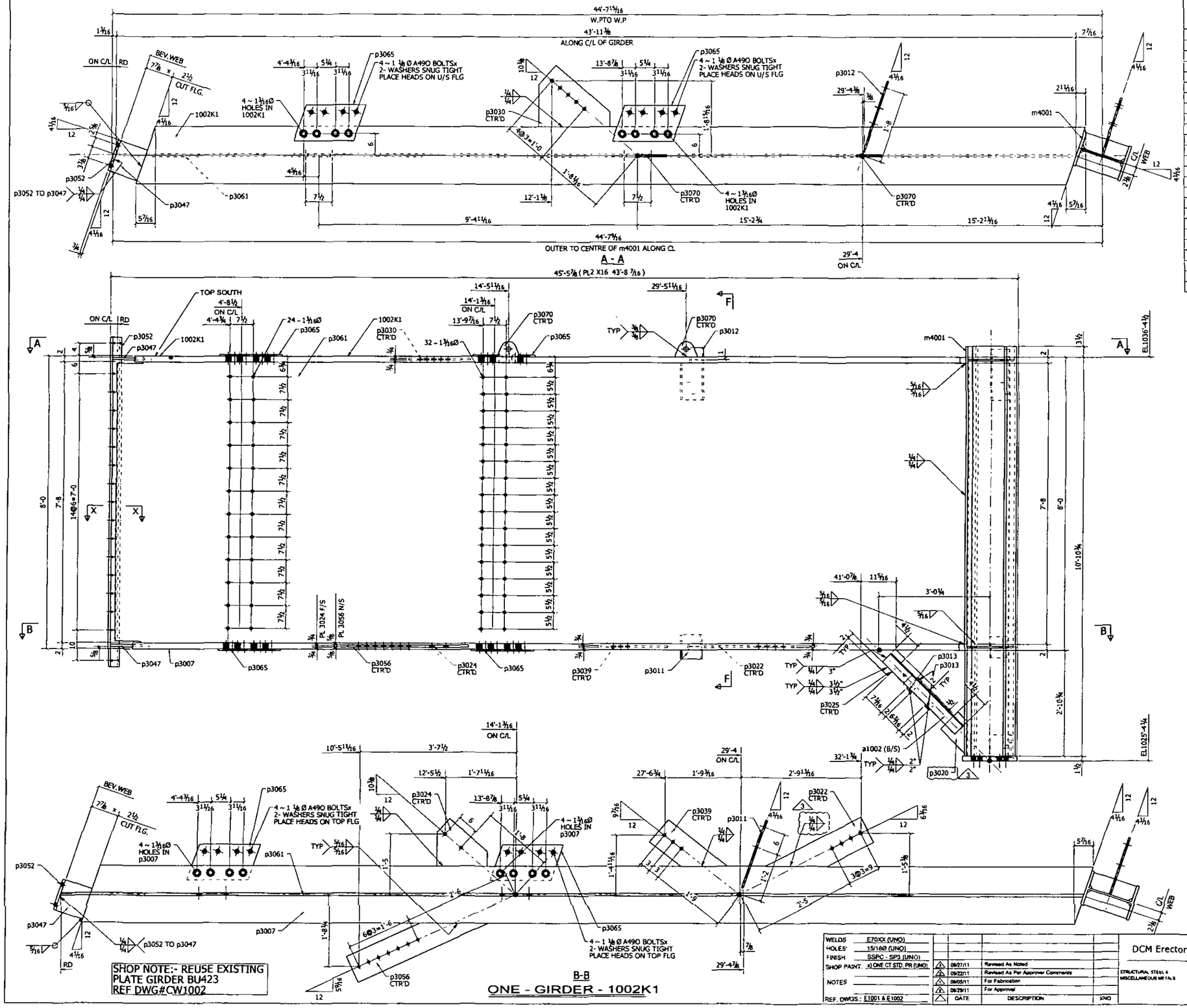

SHOP NOTE:- REUSE EXISTING PLATE GIRDER BU423 REF DWG.#CW1002

NO PAINT WITH IN 3" OF ALL OPEN HOLES

WORK THIS DWG WITH 1002A & CW1002

BILL OF MATERIAL

MATERIAL SPEC. A992

CONTRACT 843X009
DRAWING 1002 3

NO OF PCS	SHIP MK	PIECE MK	DESCRIPTION	LENGTH ft - in	GRADE	FINISH	ABM	BLK NO	BLK QTY.	REMARKS
1	1002K1		PL2"X16"	43'-8 7/16"	A572-GR 50					REF DWG#CW1002
2		a1002	L4X3X5/16	2' 9 1/2"	A36					
1		p3004	PL1 1/2"X11"	1'-3"	A572-GR 50					
1		p3007	PL2"X16"	43'-8 7/16"	A572-GR 50					
1		p3011	PL1/2"X8"	1'-8"	A572-GR 50					REF DWG#CW1002
1		p3012	PL1/2"X17 1/8"	1'-5 11/16"	A572-GR 50					SHAPE,BEV-E
2		p3013	PL1/2"X2"	0'-5"	A572-GR 50					
4		p3014	PL1/2"X4 1/2"	1'-0 9/16"	A572-GR 50					CLIP,IC
1		p3018	PL1/2"X7"	1'-4 3/4"	A572-GR 50					
1		p3019	PL1/2"X7 1/2"	1'-9"	A572-GR 50				3	
1		p3020	PL1/2"X8"	1'-0 1/2"	A572-GR 50					SHAPE,BEV-E
1		p3022	PL1/2"X8"	2'-6 5/16"	A572-GR 50					SHAPE
1		p3024	PL1/2"X12 1/4"	1'-4 13/16"	A572-GR 50					SHAPE
1		p3025	PL1/2"X8"	1'-0"	A572-GR 50					
1		p3030	PL1/2"X16 3/16"	1'-10 13/16"	A572-GR 50					SHAPE
1		p3039	PL1/2"X8"	1'-9 3/16"	A572-GR 50					SHAPE
1		p3041	PL1/2"X16 5/8"	1'-4 3/4"	A572-GR 50					
2		p3047	PL3/4"X9"	0'-7 7/8"	A572-GR 50					
1		p3052	PL3/4"X9"	9'-0"	A572-GR 50					
1		p3056	PL3/4"X8"	3'-3 5/8"	A572-GR 50					SHAPE
1		p3061	PL3/4"X92"	43'-11 5/8"	A572-GR 50					REF DWG#CW1002
4		p3065	PL1/2"X10"	1'-8 1/4"	A572-GR 50					SHAPE
1		p3065b	PL1/2"X8"	0'-10"	A572-GR 50					
2		p3070	PL5/8"X5"	0'-7"	A572-GR 50					SHAPE
1		m4001	W14X68	11-2 1/4"	A992-GR 50					BO_IC

WELDS: E70XX (UNO)
HOLES: 15/16Ø (UNO)
FINISH: SSPC - SP3 (UNO)
SHOP PAINT: a) ONE CT STD. PR (UNO)
NOTES:
REF. DWGS.: E1001 & E1002

GATE	DESCRIPTION	XNO
08/27/11	Revised As Noted	
09/22/11	Revised As Per Approver Comments	
08/05/11	For Fabrication	
08/29/11	For Approval	

DCM Erectors, Inc.
DCM ERECTORS INC
STRUCTURAL STEEL & MISCELLANEOUS METALS
77 Belfield Rd., Suite 100 Etobicoke, Ontario Canada M9W 1G6 Tel: (416) 241-8997 Fax: (416) 241-3239
118 EAST 43rd STREET SUITE 1710 NEW YORK, NY 10017 Tel: (212) 599-1663 Fax: (212) 599-1615

PROJECT: WORLD TRADE CENTER, TOWER 4
SITE: NEW YORK, N.Y.
CLIENT: TISHMAN CONSTRUCTION CORP. OF N.Y.
TITLE: PLATE GIRDER
DRAWN: VA
CHECKER: SBR
SCALE: NTS
BLOCK:
CONTRACT No 843X009
DRAWING No 1002 3

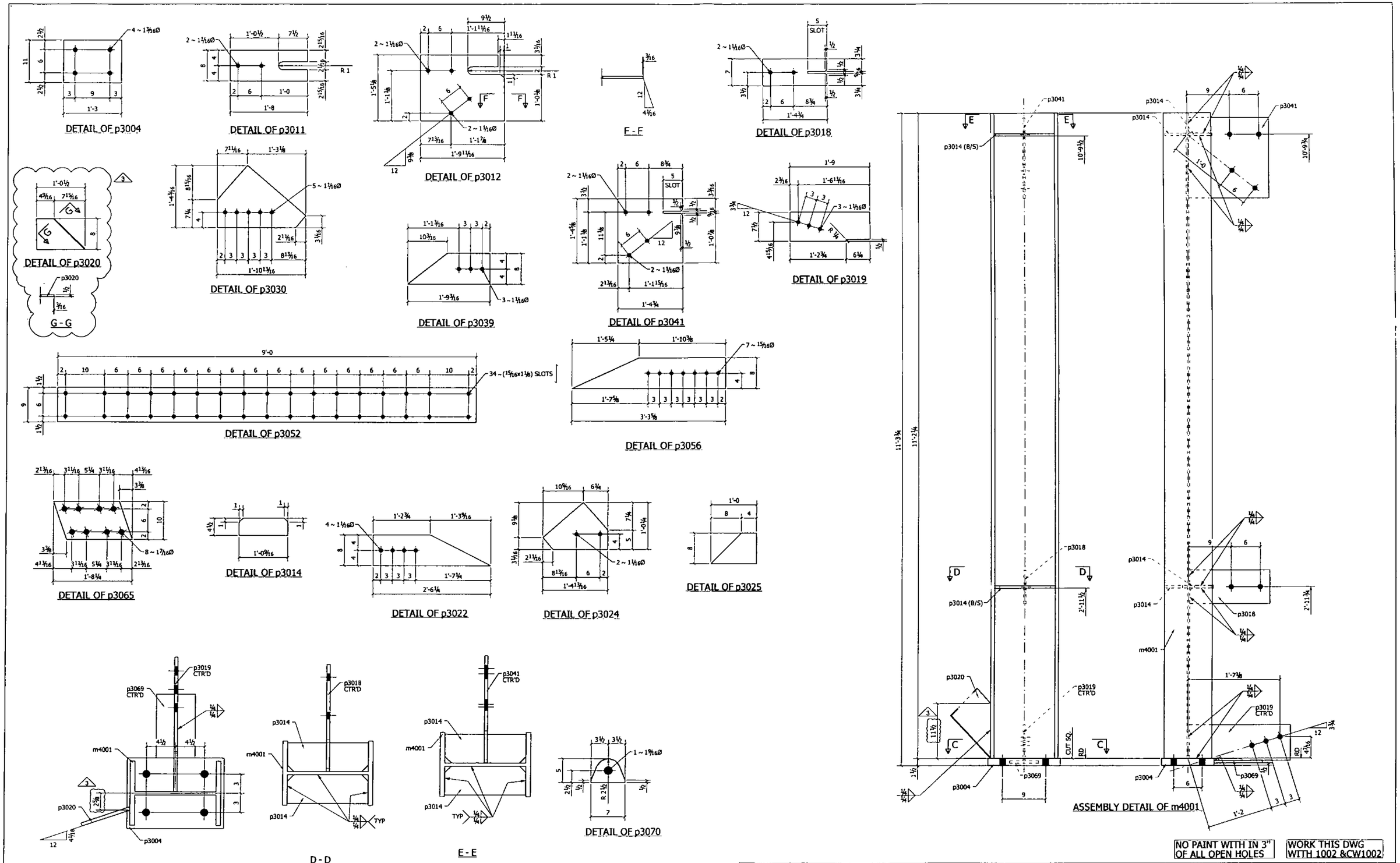
DETAIL OF p3004
DETAIL OF p3011
DETAIL OF p3012
F - F
DETAIL OF p3018
DETAIL OF p3020
G - G
DETAIL OF p3030
DETAIL OF p3039
DETAIL OF p3041
DETAIL OF p3019
DETAIL OF p3052
DETAIL OF p3056
DETAIL OF p3065
DETAIL OF p3014
DETAIL OF p3022
DETAIL OF p3024
DETAIL OF p3025
C - C
D - D
E - E
DETAIL OF p3070
ASSEMBLY DETAIL OF m4001
NO PAINT WITH IN 3" OF ALL OPEN HOLES
WORK THIS DWG WITH 1002 &CW1002
WELDS E70XX (UNO)
HOLES 15/16Ø (UNO)
FINISH SSPC - SP3 (UNO)
SHOP PAINT #3 ONE CT STD. PR (UNO)
NOTES
REF. DWGS.: E1001 & E1002
DATE DESCRIPTION XNO
08/27/11 Revised As Noted
08/22/11 Revised As Per Approver Comments
08/05/11 For Fabrication
06/29/11 For Approval
DCM Erectors, Inc.
STRUCTURAL STEEL & MISCELLANEOUS METALS
77 Belfield Rd., Suite 100 Etobicoke, Ontario Canada M9W 1G6 Tel: (416) 241-8867 Fax: (416) 241-3238
110 EAST 42nd STREET SUITE 1710 NEW YORK, NY 10017 Tel: (212) 599-1603 Fax: (212) 599-1615
PROJECT: WORLD TRADE CENTER, TOWER 4
SITE: NEW YORK, N.Y.
CLIENT: TISHMAN CONSTRUCTION CORP. OF N.Y.
TITLE SECTIONS & DETAILS
CONTRACT No 843X009
DRAWN: VA
CHECKER: SBR
DRAWING No 1002A
SCALE: NTS
BLOCK:

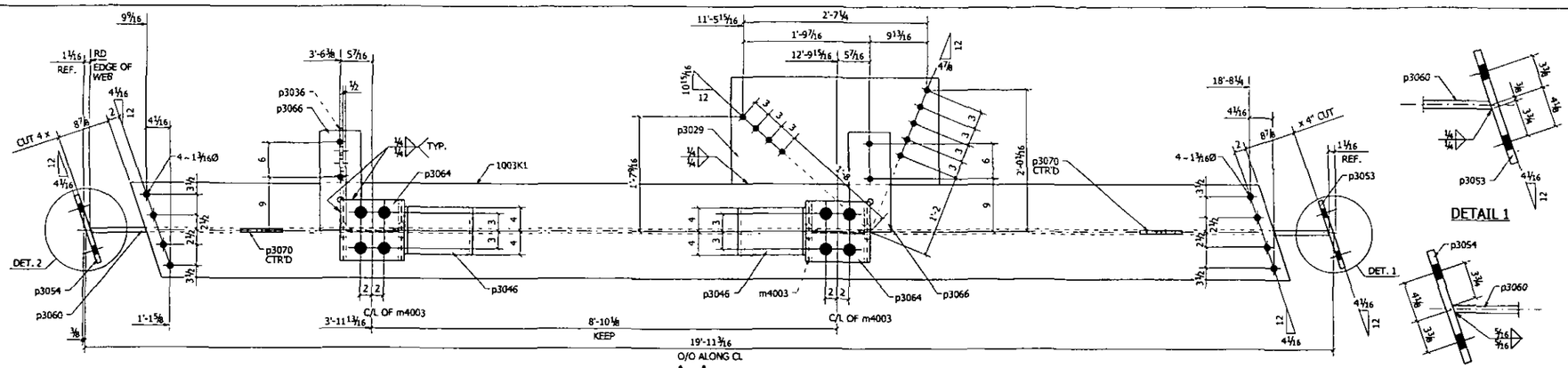

A - A

DETAIL 1

DETAIL 2

BILL OF MATERIAL					MATERIAL SPEC. A992					CONTRACT 843X009 DRAWING 1003 4
NO OF PCS	SHIP MK	PIECE MK	DESCRIPTION	LENGTH ft - in	GRADE	FINISH	ABM	BLK NO.	BLK QTY.	REMARKS
1	1003K1		PL2"X16"	18'-8 5/16"	A572-GR.50					REF DWG#CW1003
4		p3003	PL1"X4 3/4"	3'-10"	A572-GR.50					PREP IE
1		p3006	PL2"X16"	18'-8 5/16"	A572-GR.50					REF DWG#CW1003
4		p3008	PL1"X4 3/4"	7'-8"	A572-GR.50					PREP IE
1		p3023	PL1/2"X8"	1'-0"	A572-GR.50					
1		p3029	PL1/2"X18 1/8"	2'-11 1/4"	A572-GR.50					
1		p3036	PL1/2"X8"	1'-4 3/4"	A572-GR.50					SHAPE
1		p3037	PL1/2"X8"	2'-1 5/16"	A572-GR.50					SHAPE
1		p3038	PL1/2"X8"	2'-4 13/16"	A572-GR.50					SHAPE
1		p3040	PL1/2"X8"	1'-4 1/4"	A572-GR.50					SHAPE
1		p3043	PL1/2"X15 3/8"	2'-7 7/8"	A572-GR.50					
2		p3046	PL3/4"X8"	1'-3 9/16"	A572-GR.50					
1		p3053	PL3/4"X12"	7'-4"	A572-GR.50					
1		p3054	PL3/4"X12"	7'-4"	A572-GR.50					
1		p3060	PL3/4"X92"	18'-8 7/8"	A572-GR.50					REF DWG#CW1003
2		p3064	PL2 1/2"X10 1/4"	0'-10 7/8"	A572-GR.50					MILL TO 2 3/8" THK.
2		p3066	PL1/2"X7"	1'-5"	A572-GR.50					SHAPE
2		p3070	PL5/8"X5"	0'-7"	A572-GR.50					
2		m4003	W10X88	0'-10 1/8"	A992-GR.50					PREP 3G-3E

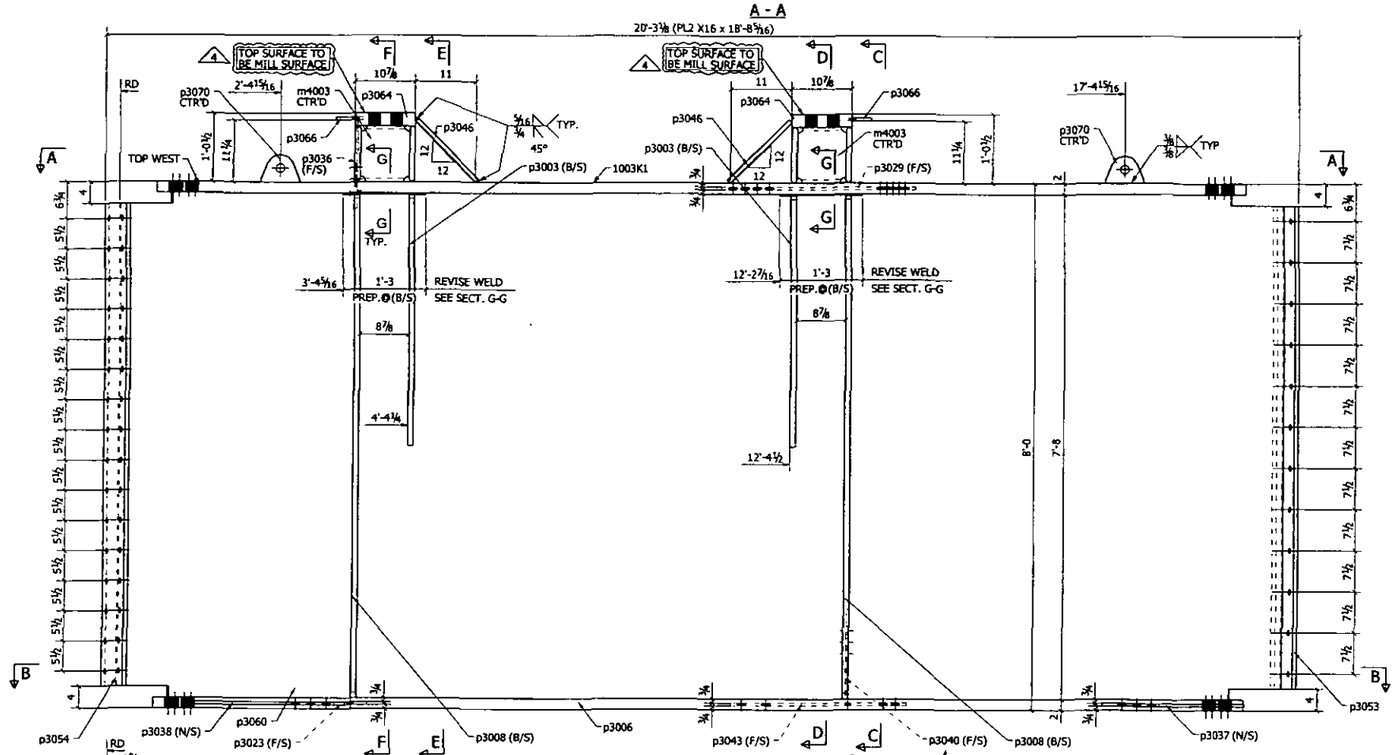

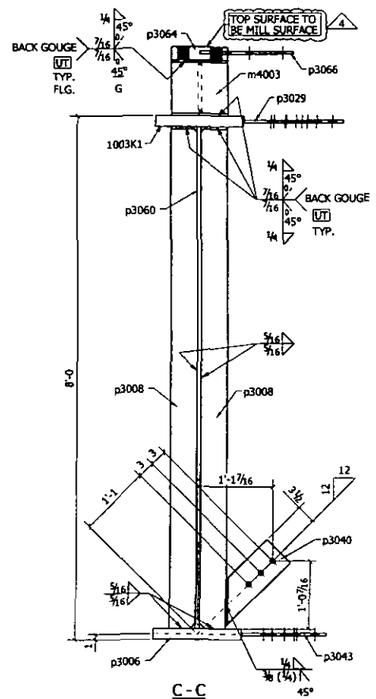

C - C

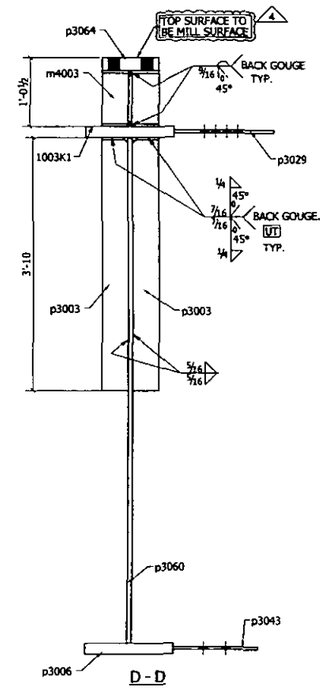

D - D

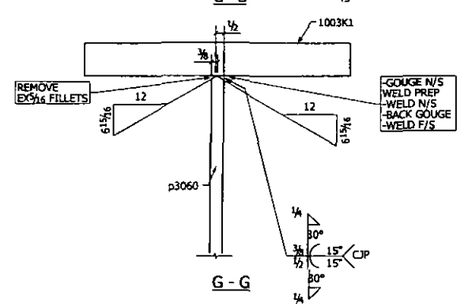

G - G

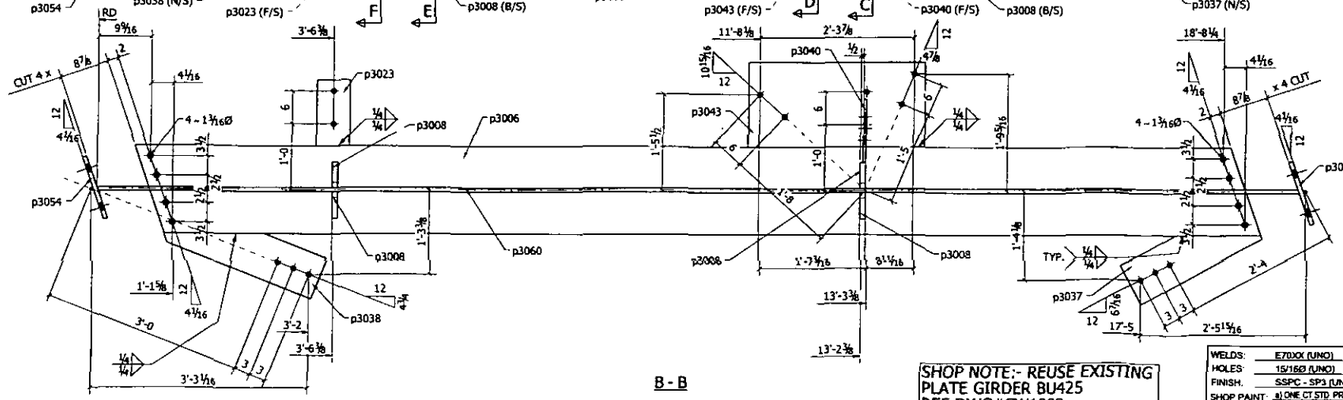

B - B

ONE - GIRDER - 1003K1

SHOP NOTE:- REUSE EXISTING PLATE GIRDER BU425 REF DWG#CW1003

NO PAINT WITH IN 3" OF ALL OPEN HOLES

WORK THIS DWG WITH 1003A & CW1003

WELDS: E70XX (UNO)
HOLES: 15/16Ø (UNO)
FINISH: SSPC - SP3 (UNO)
SHOP PAINT: a) ONE CT STD. PR (UNO)
NOTES:
REF. DWGS.: E1001 & E1002

	DATE	DESCRIPTION	XNO
4	09/27/11	Revised As Noted	
3	08/22/11	Revised As Per Approver Comments	
2	08/07/11	REVISED AS NOTED	
1	08/05/11	For Fabrication	
0	08/29/11	For Approver	

DCM Erectors, Inc.
DCM ERECTORS INC
STRUCTURAL STEEL & MISCELLANEOUS METALS
77 Bartlett Rd., Suite 100 Etobicoke, Ontario Canada M9W 1G6 Tel: (416) 241-8867 Fax: (416) 241-2238
110 EAST 42nd STREET SUITE 1710 NEW YORK, NY 10017 Tel: (212) 599-1833 Fax: (212) 599-1616

PROJECT.	WORLD TRADE CENTER, TOWER 4
SITE	NEW YORK, N.Y.
CLIENT.	TISHMAN CONSTRUCTION CORP. OF N.Y.
TITLE	PLATE GIRDER
CONTRACT No.	843X009
DRAWN: SJK	CHECKER: SBR
DRAWING No	1003 4
SCALE: NTS	BLOCK:

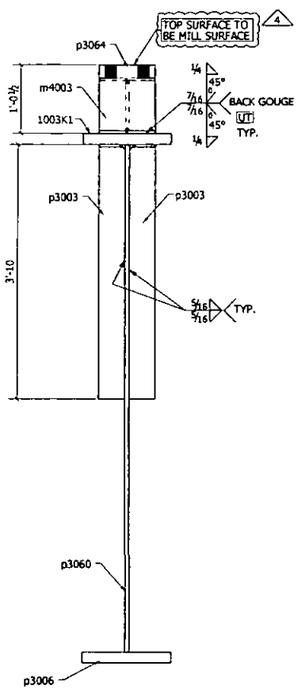

E - E

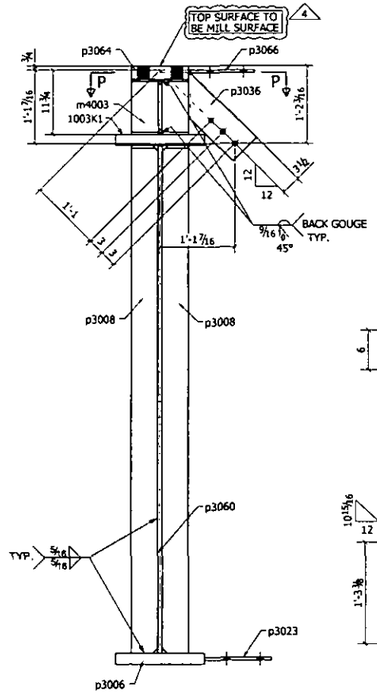

F - F

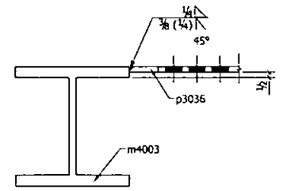

P - P

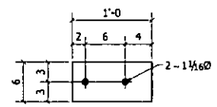

DETAIL OF p3023

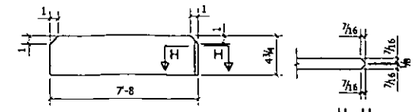

DETAIL OF p3008

H - H

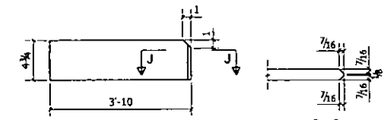

DETAIL OF p3003

J - J

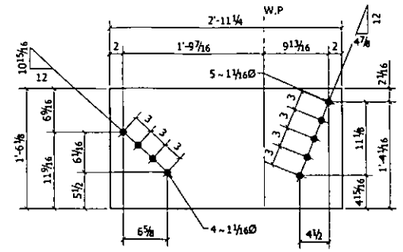

DETAIL OF p3029

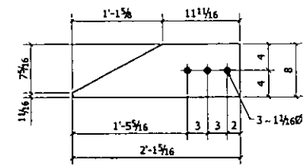

DETAIL OF p3037

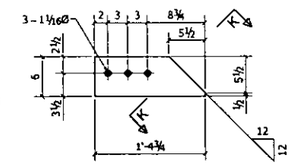

DETAIL OF p3036

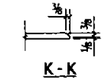

K - K

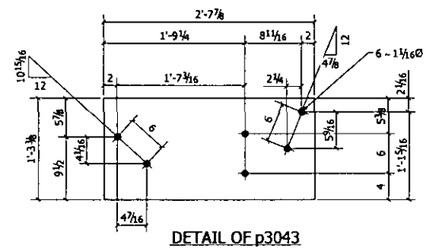

DETAIL OF p3043

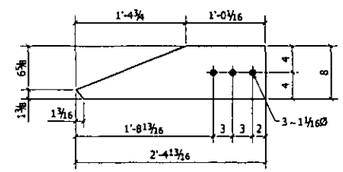

DETAIL OF p3038

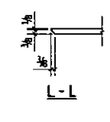

L - L

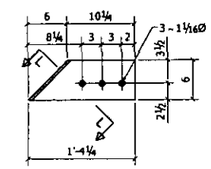

DETAIL OF p3040

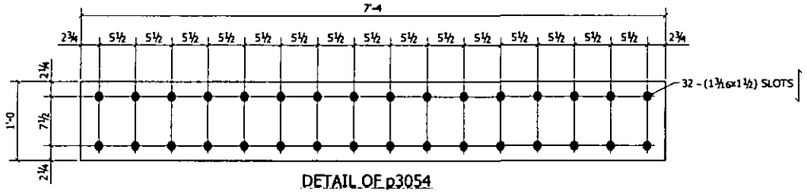

DETAIL OF p3054

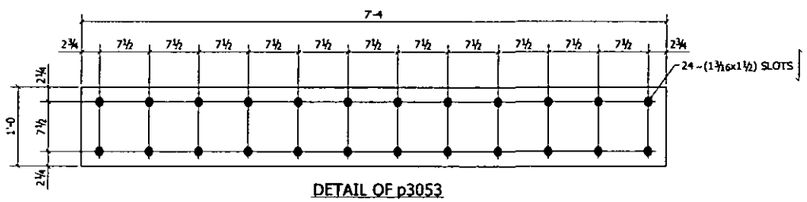

DETAIL OF p3053

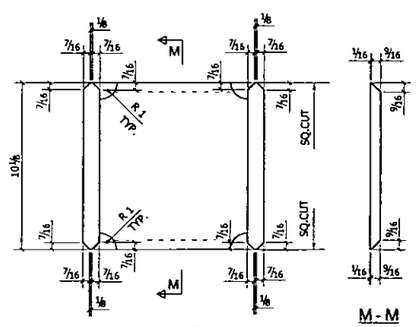

DETAIL OF m4003

M - M

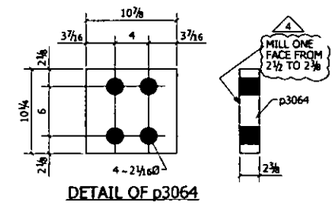

DETAIL OF p3064

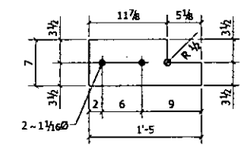

DETAIL OF p3066

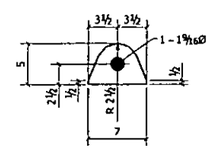

DETAIL OF p3070

NO PAINT WITH IN 3" OF ALL OPEN HOLES

WORK THIS DWG WITH 1003

WELDS	E70XX (UNO)			
HOLES	15/16Ø (UNO)			
FINISH	SSPC - SP3 (UNO)	4	09/27/11	Revised As Noted
SHOP PAINT	#1 ONE CT STD. PR.(UNO)	3	09/22/11	Revised As Per Approver Comments
NOTES		2	08/07/11	REVISED AS NOTED
		1	08/05/11	For Fabrication
		0	06/29/11	For Approval
REF. DWGS.:	E1001 & E1002	△	DATE	DESCRIPTION XNO

DCM Erectors, Inc.

DCM ERECTORS INC.

STRUCTURAL STEEL & MISCELLANEOUS METALS

77 Belfield Rd. Suite 100, Etobicoke, Ontario, Canada M9W 1G6, Tel: (416) 241-8987, Fax: (416) 241-3239

110 EAST 42nd STREET SUITE 1710, NEW YORK, NY 10017, Tel: (212) 599-1803, Fax: (212) 599-1813

PROJECT:	WORLD TRADE CENTER TOWER 4		
SITE:	NEW YORK, N.Y.		
CLIENT:	TISHMAN CONSTRUCTION CORP. OF N.Y.		
TITLE:	SECTIONS & DETAILS		CONTRACT No 843X009
DRAWN: SJK		CHECKER: SBR	DRAWING No
SCALE	NTS	BLOCK:	1003A △4

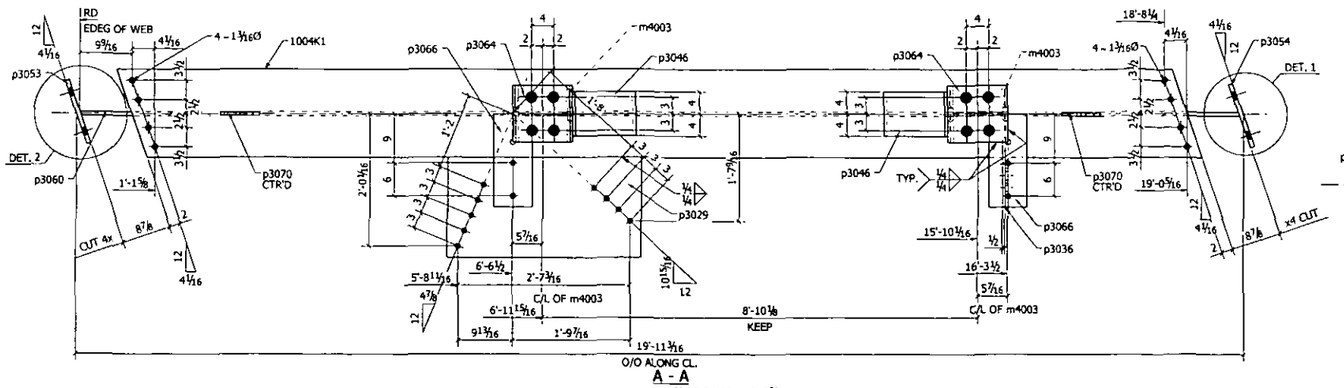

A - A

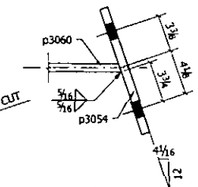

DETAIL - 1

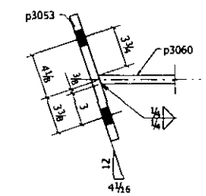

DETAIL 2

BILL OF MATERIAL					MATERIAL SPEC. A992					CONTRACT 843X009 DRAWING 1004 4
NO OF PCS	SHIP MK	PIECE MK	DESCRIPTION	LENGTH ft - in	GRADE	FINISH	ABM	BLK NO	BLK QTY.	REMARKS
1	1004K1		PL2"X16"	18'-8 5/16"	A572-GR.50					REF DWG#CW1004
4		p3003	PL1"X4 3/4"	3'-10"	A572-GR.50					PREP 1E
1		p3006	PL2"X16"	18'-8 5/16"	A572-GR.50					REF DWG#CW1004
4		p3008	PL1"X4 3/4"	7'-8"	A572-GR.50					PREP 1E
1		p3023	PL1/2"X8"	1'-0"	A572-GR.50					
1		p3026	PL1/2"X12 7/8"	2'-6 1/8"	A572-GR.50					
1		p3029	PL1/2"X18 1/8"	2'-11 1/4"	A572-GR.50					
1		p3036	PL1/2"X6"	1'-4 3/4"	A572-GR.50					SHAPE
1		p3040	PL1/2"X6"	1'-4 1/4"	A572-GR.50					SHAPE
1		p3043	PL1/2"X15 3/8"	2'-7 7/8"	A572-GR.50					
2		p3046	PL3/4"X8"	1'-3 9/16"	A572-GR.50					
1		p3053	PL3/4"X12"	7'-4"	A572-GR.50					
1		p3054	PL3/4"X12"	7'-4"	A572-GR.50					
1		p3060	PL3/4"X82"	19'-9 7/8"	A572-GR.50					REF DWG#CW1004
2		p3064	PL2 1/2"X10 1/4"	0'-10 7/8"	A572-GR.50					MILL TO 23/8" THK
2		p3066	PL1/2"X7"	1'-5"	A572-GR.50					SHAPE
2		p3070	PL5/8"X5"	0'-7"	A572-GR.50					
2		m4003	W10X88	0'-10 1/8"	A992-GR.50					PREP 90-X

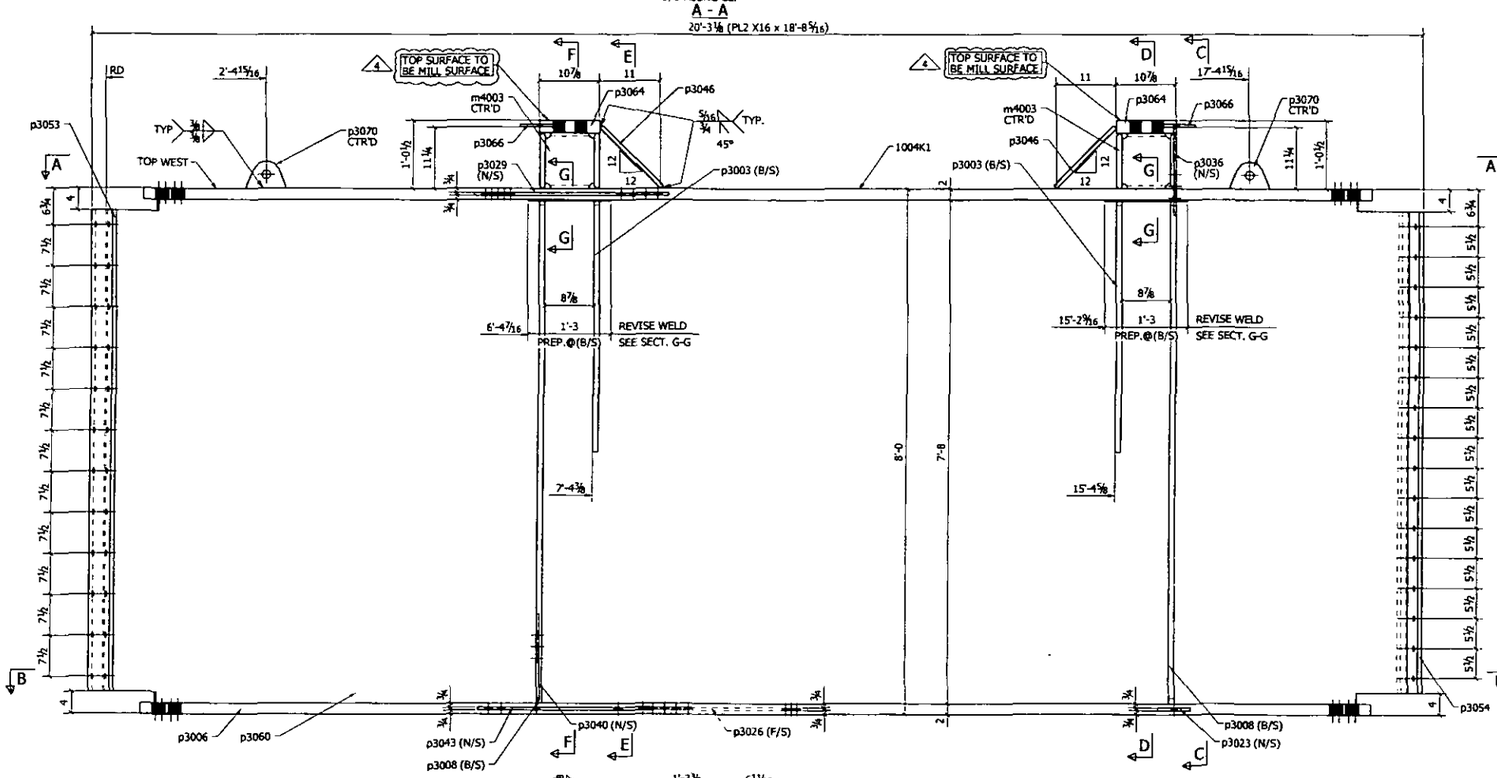

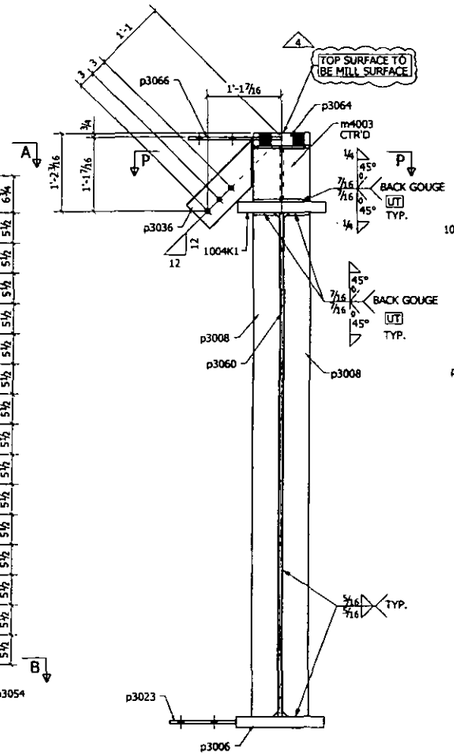

C - C

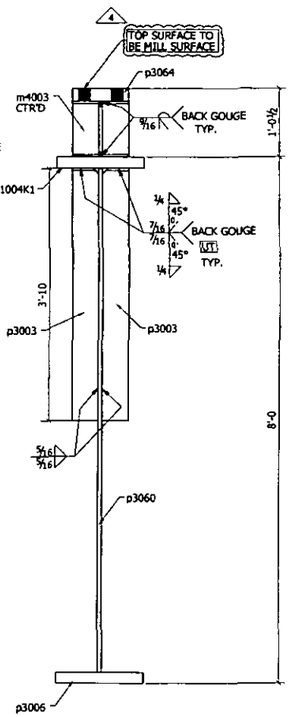

D - D

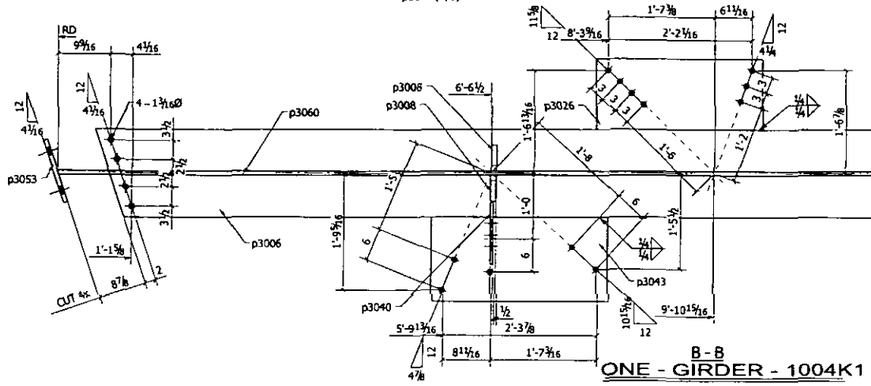

B - B

ONE - GIRDER - 1004K1

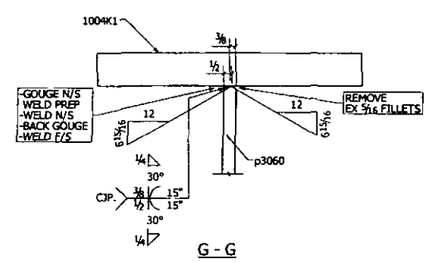

G - G

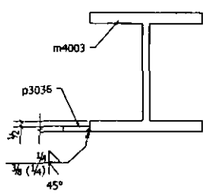

P - P

NO PAINT WITH IN 3" OF ALL OPEN HOLES

WORK THIS DWG WITH 1004A

SHOP NOTE:- REUSE EXISTING PLATE GIRDER BU426 REF DWG#CW1004

WELDS	E70XX (UNO)
HOLES:	15/16Ø (UNO)
FINISH:	SSPC - SP3 (UNO)
SHOP PAINT:	#1 ONE CT.STD. PR (UNO)
NOTES	
REF. DWGS.:	E1001 & E1002

	DATE	DESCRIPTION	XNO
4	09/27/11	Revised As Noted	
3	09/22/11	Revised As Per Approver Comments	
2	08/07/11	REVISED AS NOTED	
1	09/02/11	For Fabrication	
0	08/29/11	For Approval	

DCM Erectors, Inc.
DCM ERECTORS INC
STRUCTURAL STEEL & MISCELLANEOUS METALS
77 Bedford Rd. Suite 100, Etobicoke, Ontario, Canada M8W 1G6, Tel: (416) 241-4987, Fax: (416) 241-3238
110 EAST 42nd STREET, SUITE 1710, NEW YORK, NY 10017, Tel: (212) 599-1903, Fax: (212) 599-1615

PROJECT:	WORLD TRADE CENTER, TOWER 4
SITE:	NEW YORK, N.Y.
CLIENT:	TISHMAN CONSTRUCTION CORP. OF N.Y.
TITLE:	PLATE GIRDER
DRAWN: SJK	CHECKER SBR
SCALE: NTS	BLOCK:
CONTRACT No	843X009
DRAWING No.	1004 4

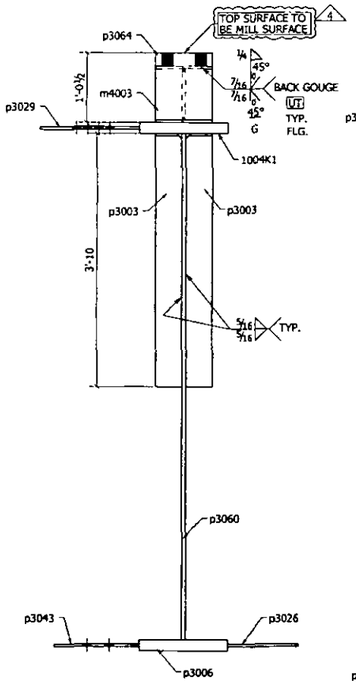

E - E

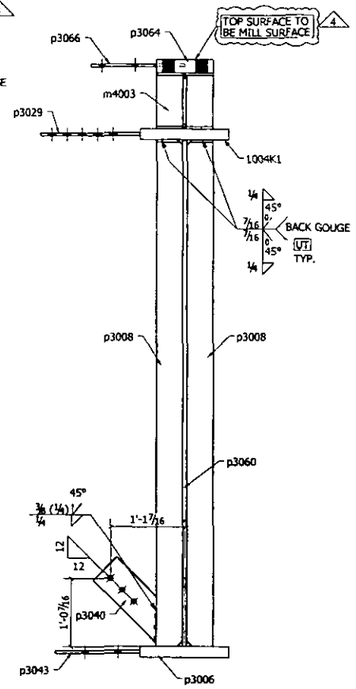

F - F

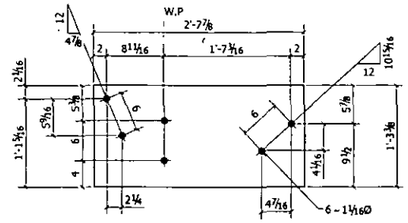

DETAIL OF p3043

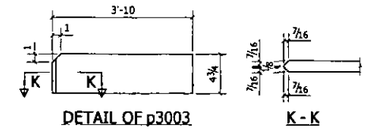

DETAIL OF p3003

K - K

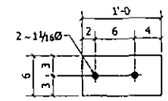

DETAIL OF p3023

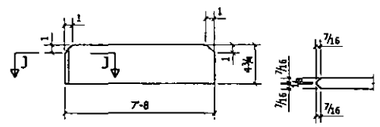

DETAIL OF p3008

J - J

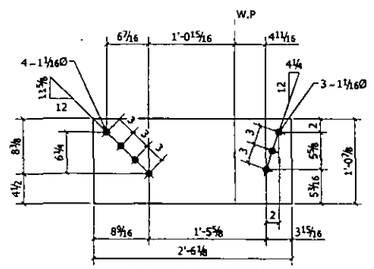

DETAIL OF p3026

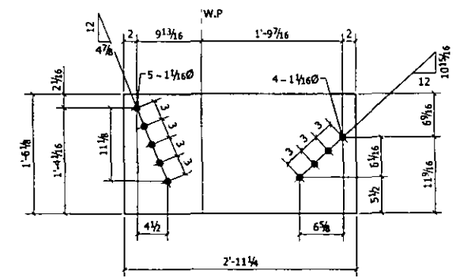

DETAIL OF p3029

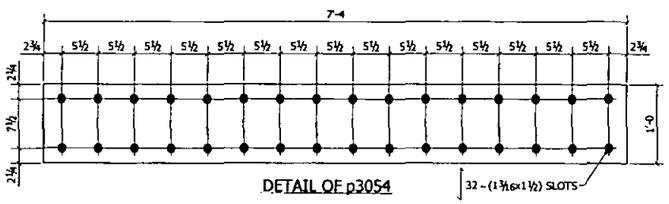

DETAIL OF p3054

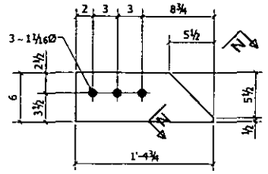

DETAIL OF p3036

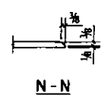

N - N

H - H

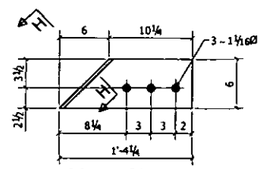

DETAIL OF p3040

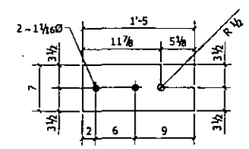

DETAIL OF p3066

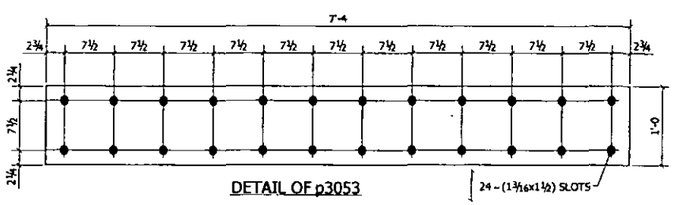

DETAIL OF p3053

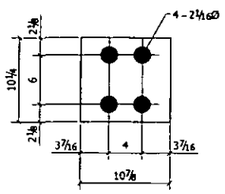

DETAIL OF p3064

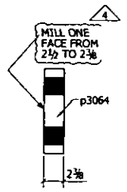

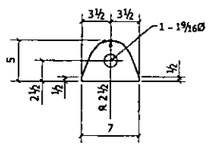

DETAIL OF p3070

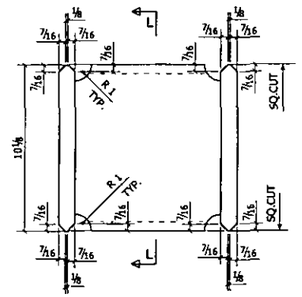

DETAIL OF m4003

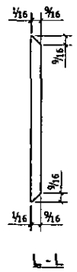

L - L

NO PAINT WITH IN 3" OF ALL OPEN HOLES

WORK THIS DWG WITH 1004

WELDS:	E70XX (UNO)			
HOLES:	15/16Ø (UNO)			
FINISH:	SSPC - SP3 (UNO)	3	09/27/11	Revised As Noted
SHOP PAINT:	1 ONE CT STD PR (UNO)	2	09/22/11	Revised As Per Approver Comments
NOTES:		1	09/07/11	REVISED AS NOTED
		0	09/05/11	For Fabrication
		A	08/29/11	For Approval
REF. DWGS.:	E1001 & E1002	△	DATE	DESCRIPTION XNO

DCM Erectors, Inc.

STRUCTURAL STEEL & MISCELLANEOUS METALS

77 Belfield Rd., Suite 100, Etobicoke, Ontario, Canada M9W 1G6, Tel: (416) 241-8887, Fax: (416) 241-3239

110 EAST 42nd STREET SUITE 1710, NEW YORK, NY 10017, Tel: (212) 599-1883, Fax: (212) 599-1615

PROJECT:	WORLD TRADE CENTER, TOWER 4		
SITE:	NEW YORK, N.Y.		
CLIENT:	TISHMAN CONSTRUCTION CORP. OF N.Y.		
TITLE:	SECTIONS & DETAILS		CONTRACT No. 843X009
DRAWN: SJK	CHECKER: SBR		DRAWING No.
SCALE: NTS	BLOCK:		1004A △4

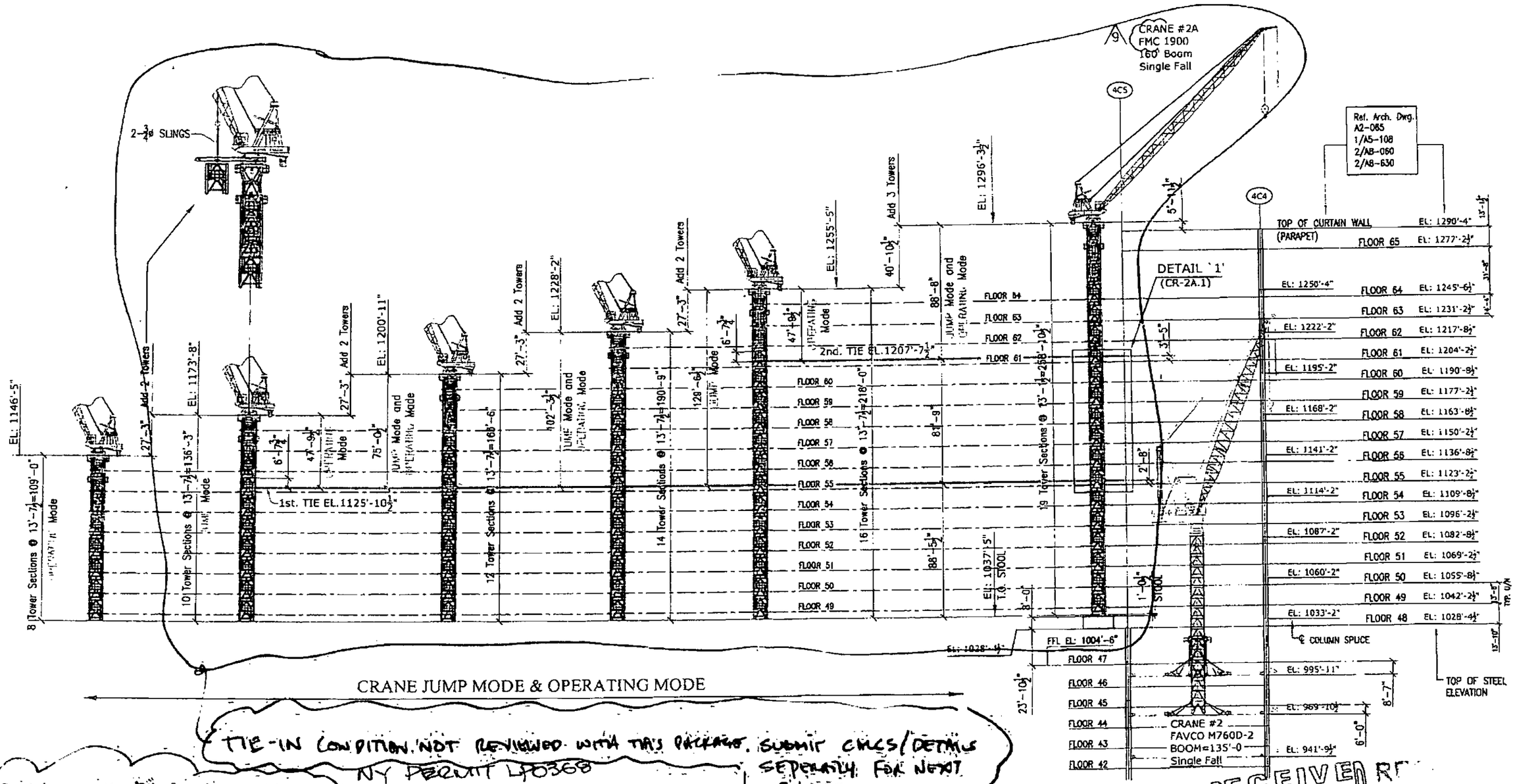

TIE-IN CONDITION. NOT REVIEWED WITH THIS PACKAGE. SUBMIT CALCS/DETAILS SEPERATELY FOR NEXT PHASE

NY PERMIT L40368

REVIEWED FOR PHASE 1A, 1B ONLY

CRANE - 2A

ELEVATION LOOKING NORTH

RECEIVED NOV 23 2011 LESLIE E. ROBERTSON ASSOCIATES 30 BROAD ST., NY, NY 10004

WORK THIS DWG. WITH DWG. CR-2A.1

LESLIE E. ROBERTSON ASSOCIATES L.P.

By: 20 DEC 11

LICENSED PROFESSIONAL ENGINEER J. JURIMAE PROVINCE OF ONTARIO

NOV 15, 2011

REV.	DATE	DESCRIPTION
9	Oct. 17/2011	CRANE 2A CORRECTED TO SHOW FMC 1900
8	Oct. 8/2011	NUMBER OF TOWER SECTIONS REVISED IN JUMPS
7	Aug.23/2011	TOWER SECTIONS REDUCED TO 19 FROM 20
6	Aug.15/2011	CRANE CHANGED TO FAVCO 1900
5	July 11/2011	CRANE TOWER SECTION ROTATED BY 90 DEG.
4	Mar. 25/2011	1-FAVCO 760 TOWER ADDED (For Collar to clear Ext. Climber)

DCM Erectors, Inc.

DCM ERECTORS INC.

STRUCTURAL STEEL & MISCELLANEOUS METALS

77 Belfield Rd., Suite 100, Etobicoke, Ontario, Canada M9W 1G6, Tel: (416) 241-6967, Fax: (416) 241-3239

110 East 42nd Street, Suite 1710, New York, N.Y. 10017, Tel: (212) 599-1603, Fax: (212) 599-1615

PROJECT: WORLD TRADE CENTER TOWER 4

SITE: 150 Greenwich Street, New York, N.Y.

CLIENT: TISHMAN CONSTRUCTION CORP.

TITLE: CRANE #2A ABOVE 48th. FLOOR
9 FMC 1900 TOWER SECTION+CLIMBER

CONTRACT No.: 843

DRAWN: Sam Aug.25/2010

CHECKED:

SCALE:

DRAWING No.: CR-2A 9

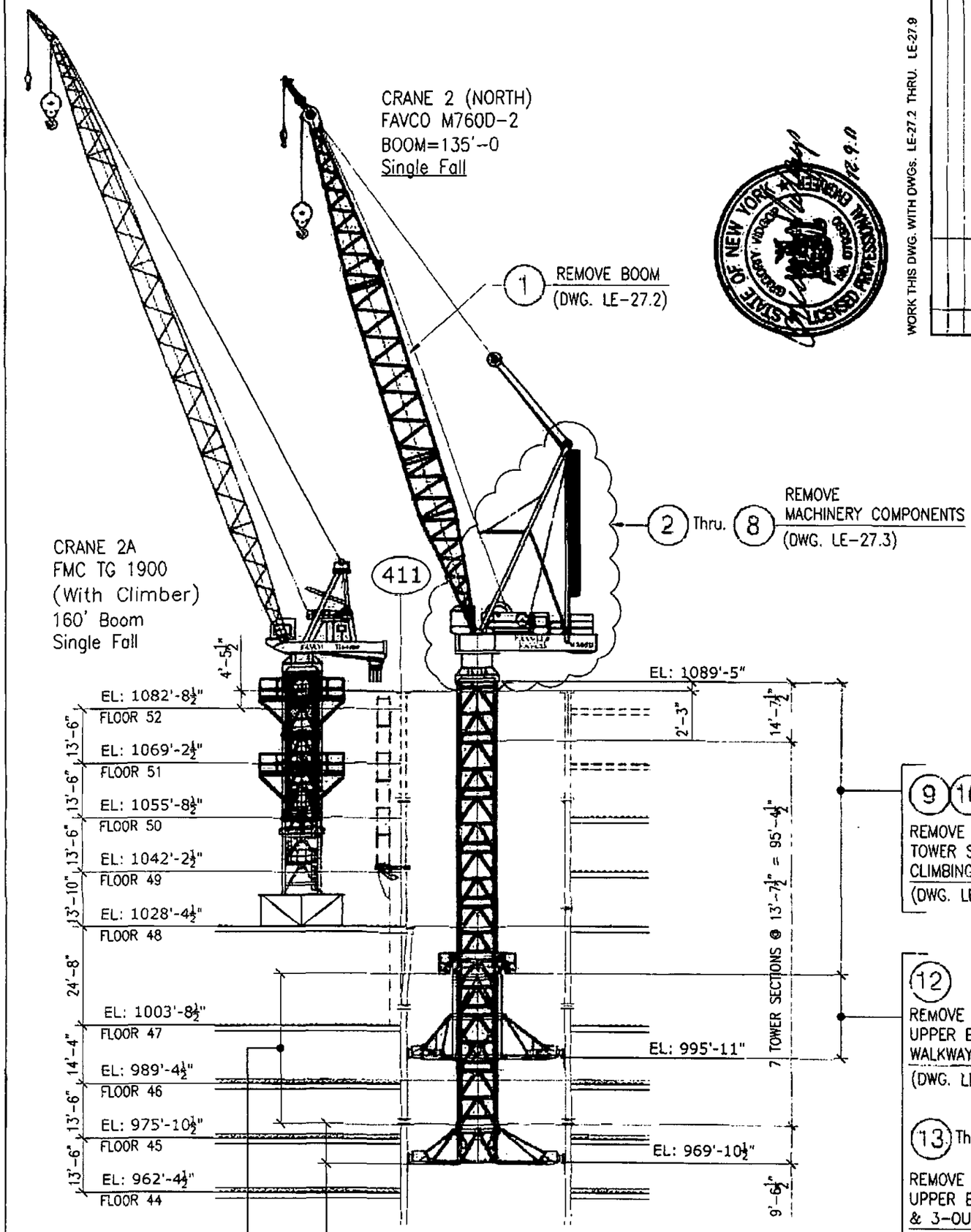

WORK THIS DWG. WITH DWGs. LE-27.2 THRU. LE-27.9

REV.	DATE	DESCRIPTION
0	Dec. 5/2011	FOR APPROVAL

PROJECT: WORLD TRADE CENTER - TOWER 4
SITE: 150 Greenwich Street, New York, N.Y.
OWNER: TISHMAN CONSTRUCTION CORP.
TITLE: DISMANTLING CRANE 2 (FAVCO M760D) USING CRANE 1 & CRANE 2A
CONTRACT No. 843
DRAWING No. LE-27.1
DRAWN: Sam Dec. 5/2011
CHECKED:
SCALE:
REVIEW:

DCM Erectors, Inc.
STRUCTURAL STEEL & MISCELLANEOUS METALS
77 Dufferin Rd. Suite 100 Plattsville, Ontario Canada N0J 1G6 Tel: (416) 241-6967 Fax: (416) 241-3239
110 East 42nd Street Suite 1704 New York, N.Y. 10017 Tel: (212) 599-1603 Fax: (212) 599-1615

STATE OF NEW YORK — GEORGE WIDOOS — No. 071101 — LICENSED PROFESSIONAL ENGINEER

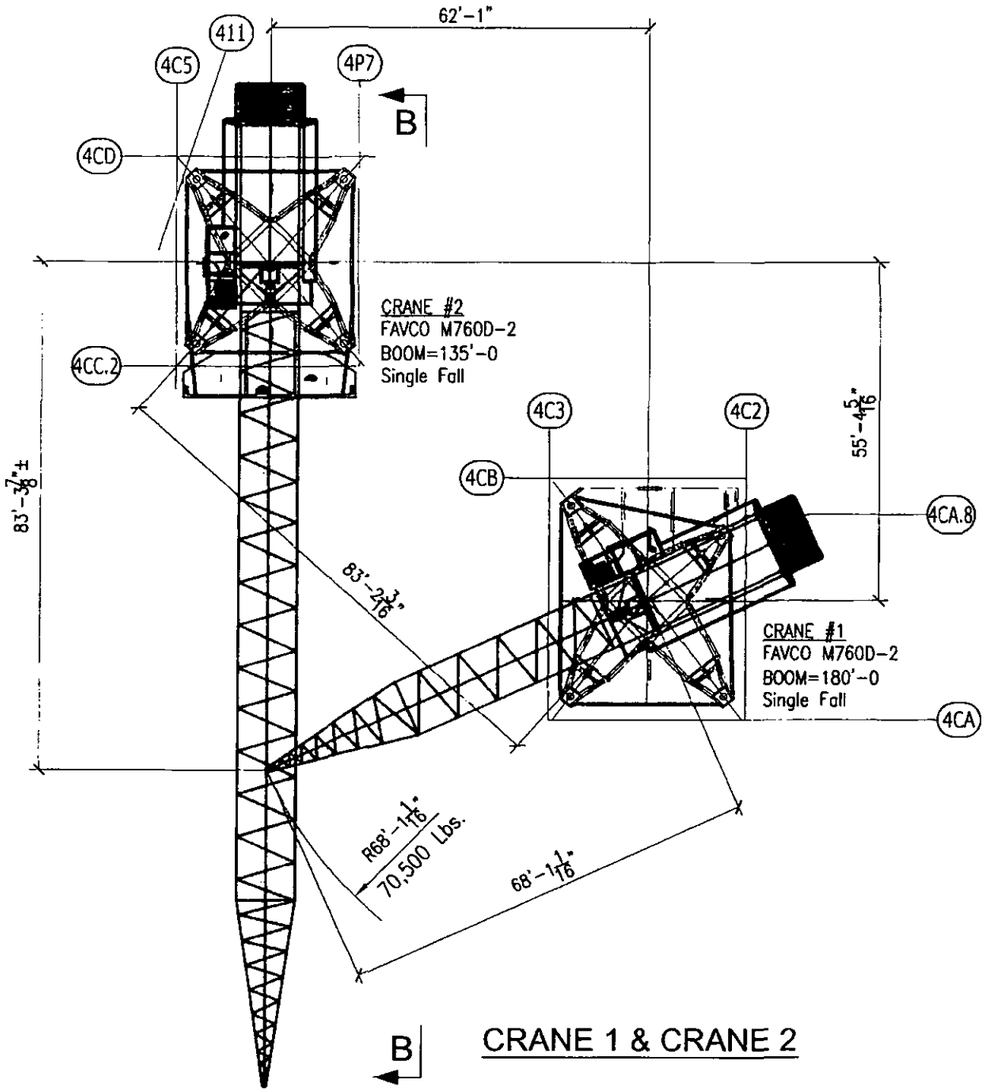

CRANE 1 & CRANE 2

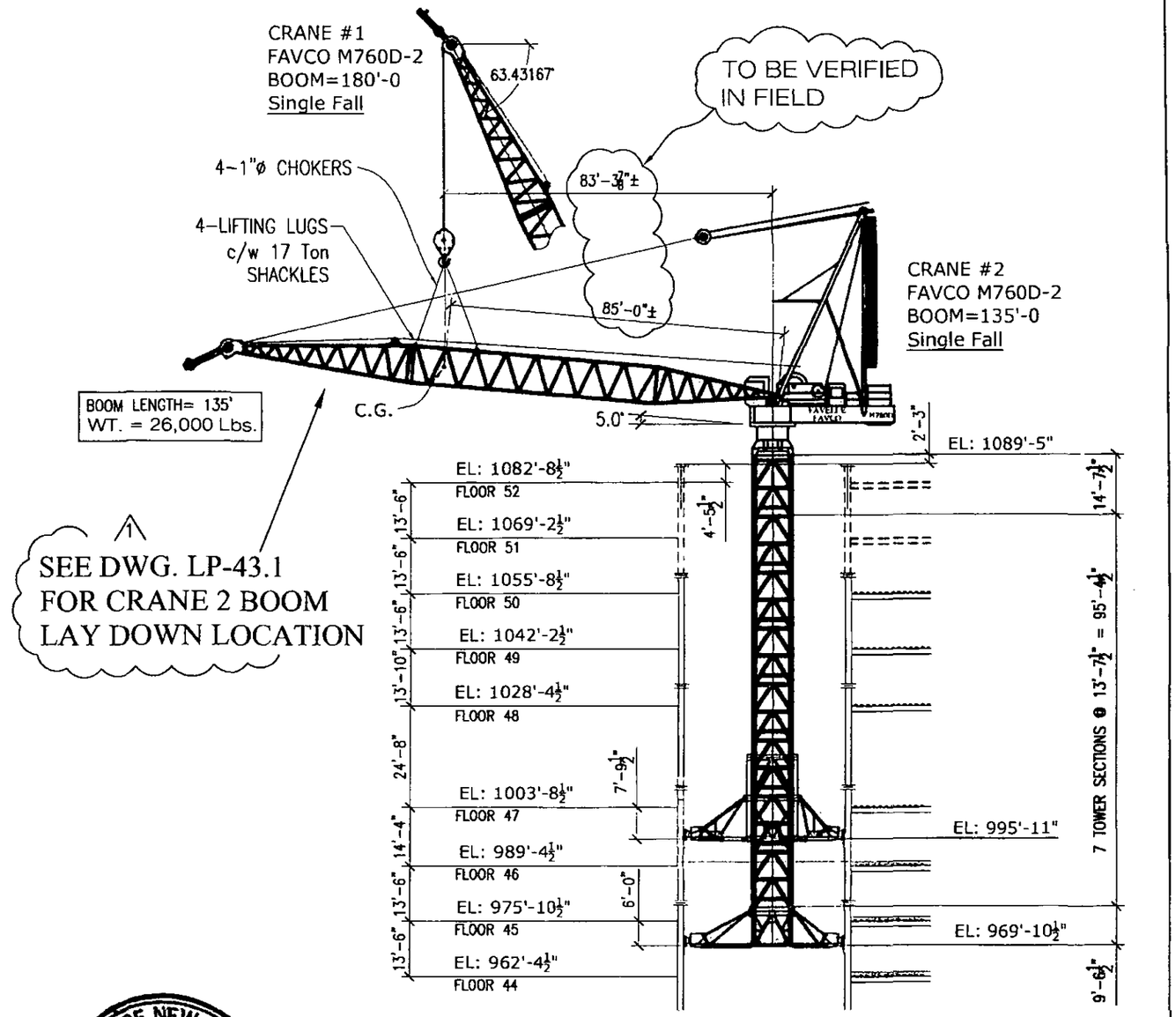

SEE DWG. LP-43.1 FOR CRANE 2 BOOM LAY DOWN LOCATION

SECTION B-B

GENERAL NOTES

1) CONSULT OPERATORS MANUAL FOR REQUIREMENTS WHEN WIND EXCEEDS 20 m.p.h., DO NOT OPERATE IN WINDS OVER 30 m.p.h. — is should?
2) IF WINDS EXCEED 50 m.p.h., LOWER BOOM UNLESS MANUFACTURER'S INSTRUCTIONS INDICATE OTHERWISE.
3) DISMANTLING OPERATIONS ARE TO BE CONDUCTED IN ACCORDANCE WITH A.N.S.I.\ A.S.M.E. B350.5a–LATEST, APPROPRIATE OSHA RULES AND R.S. 19–2 OF THE NEW YORK CITY BUILDING CODE.
4) CRANE IS TO BE OPERATED ONLY BY NEW YORK CITY LICENSED OPERATOR.
5) THIS DISMANTLING OPERATION REQUIRES CONTROLLED INSPECTION BY NEW YORK STATE LICENSED PROFESSIONAL ENGINEER OR REGISTERED ARCHITECT (FORM 10E AND 10F).

STATE OF NEW YORK — GRIGORIY VIDGOF — No. 078380 — LICENSED PROFESSIONAL ENGINEER — 12.15.11

Conformance with or deviations from this diagram to be approved by licensed Tower Crane Rigger.

STEP 1
REMOVE CRANE 2 BOOM

WORK THIS DWG. WITH DWG. LP-43, LP-43.1, LE27.1

REV.	DATE	DESCRIPTION
1	Dec. 15/2011	BOOM LAY DOWN LOCATION SHOWN IN DWG. LP–43.1
0	Dec. 5/2011	FOR APPROVAL

DCM Erectors, Inc. — DCM ERECTORS INC.

STRUCTURAL STEEL & MISCELLANEOUS METALS

77 Belfield Rd., Suite 100, Etobicoke, Ontario, Canada M9W 1G6, Tel: (416) 241-6967, Fax: (416) 241-3239

110 East 42nd Street, Suite 1704, New York, N.Y. 10017, Tel: (212) 599-1603, Fax:(212) 599-1615

PROJECT:	WORLD TRADE CENTER - TOWER 4
SITE:	150 Greenwich Street, New York, N.Y.
CLIENT:	TISHMAN CONSTRUCTION CORP.
TITLE:	DISMANTLING CRANE 2 BOOM USING CRANE 1
CONTRACT No:	843
DRAWN:	Sam Dec. 5/2011
CHECKER:	
DRAWING No:	LE-27.2 1
SCALE:	
BLOCK:	

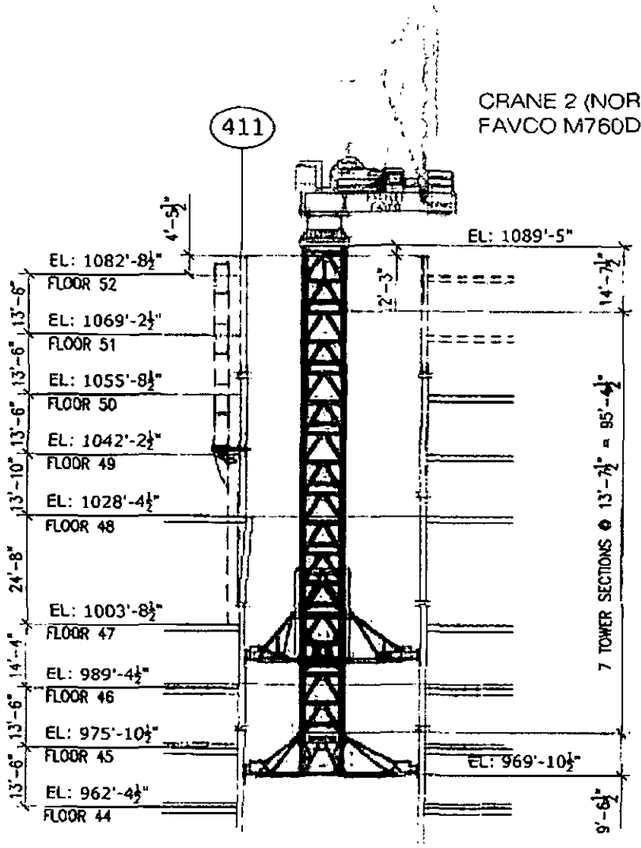

CRANE #2
BOOM REMOVED REF. LE-27.2

CRANE #2 MACHINERY COMPONENTS
ARE REMOVED
BY CRANE #1 FAVCO M760D-2
BOOM=180'-0, Single Fall

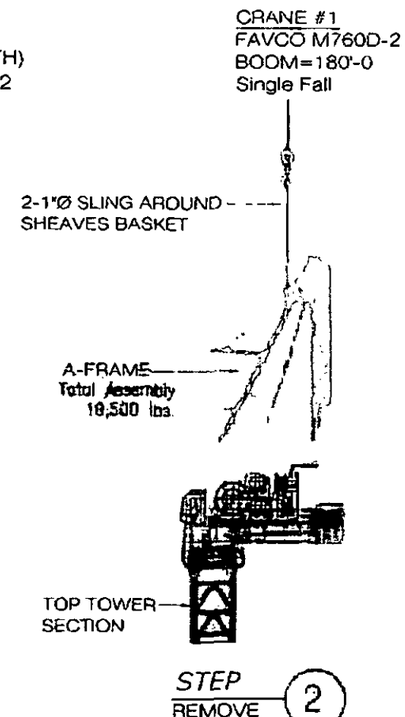

STEP 2
REMOVE
A-FRAME

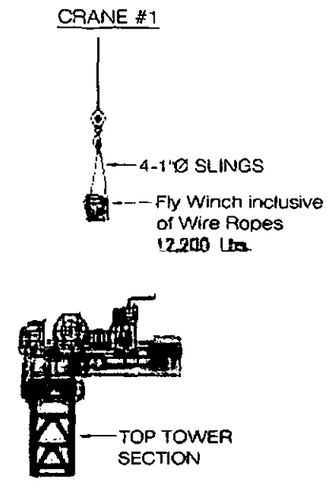

STEP 3
REMOVE
Fly Winch

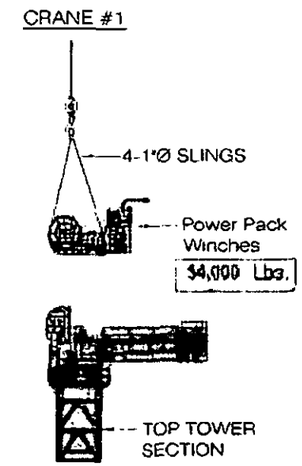

STEP 4
REMOVE
Power Pack
Winches

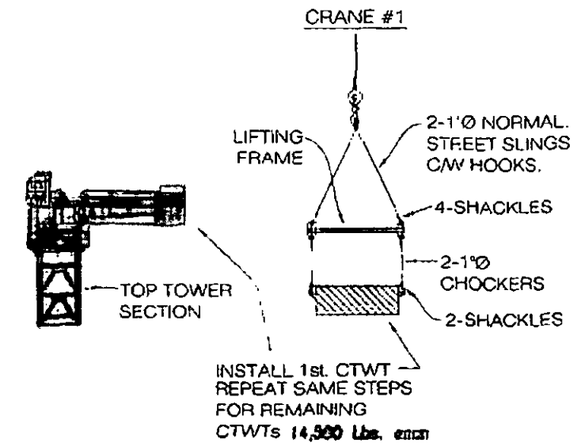

STEP 5
REMOVE
Counter Weights

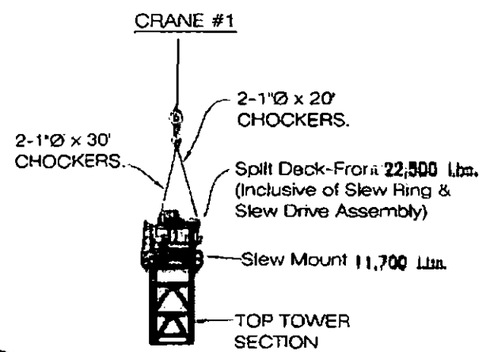

STEP 8
REMOVE
Slew Mount
+Split Deck-Front

TOTAL Wt.
34,200 Lbs.

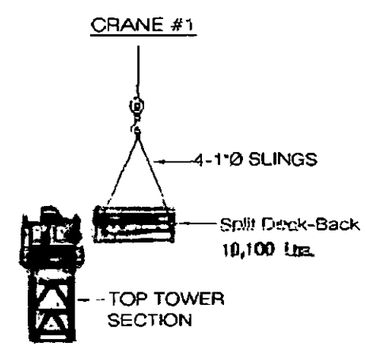

STEP 7
REMOVE
Split Deck-Back

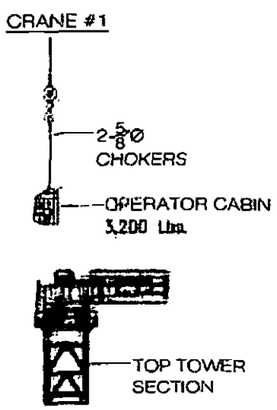

STEP 6
REMOVE
Operator's Cabin

STEP 2 THRU. 8

WORK THIS DWG. WITH DWG. LP-43, LE-27.1

STATE OF NEW YORK
GREGORY VIDOSIC
No. 070550
LICENSED PROFESSIONAL ENGINEER
12.9.11

REV.	DATE	DESCRIPTION
0	Dec. 5/2011	FOR APPROVAL

DCM Erectors, Inc.
DCM ERECTORS INC
STRUCTURAL STEEL & MISCELLANEOUS METALS
77 DeMello Rd., Suite 100, Etobicoke, Ontario, Canada M9W 1G6, Tel: (416) 241-0967, Fax: (416) 241-4239
910 East 47th Street, Suite 1704, New York, N.Y. 10017, Tel: (212) 599-1603, Fax: (212) 599-1615

PROJECT:	WORLD TRADE CENTER - TOWER 4
SITE:	150 Greenwich Street, New York, N.Y.
CLIENT:	TISHMAN CONSTRUCTION CORP.
TITLE:	DISMANTLING CRANE 2 MACHINERY USING CRANE 1
CONTRACT No.	843
DRAWN:	Sam Dec. 5/2011
CHECKED:	
SCALE:	
DRAWING No:	LE-27.3

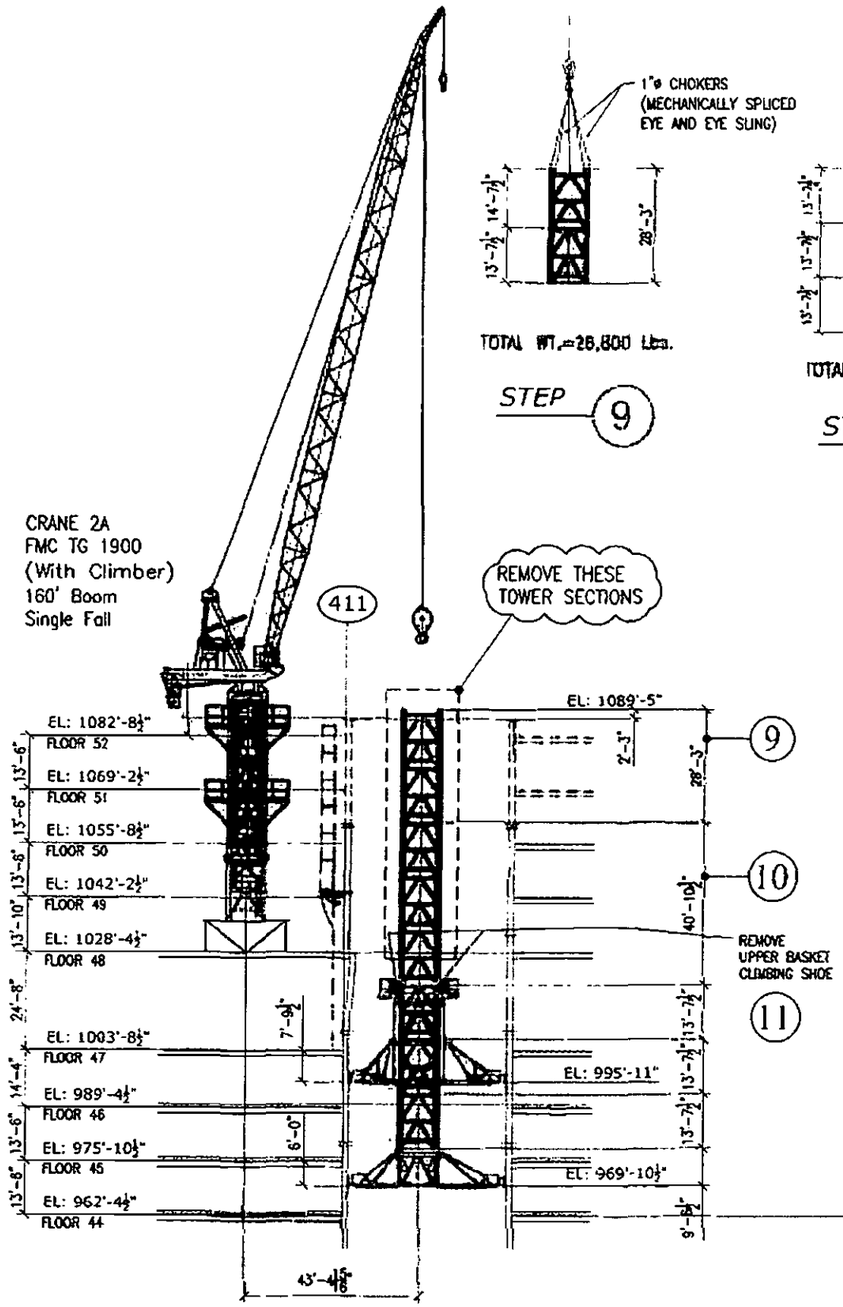

CRANE #2
LOOKING NORTH

STEP 9

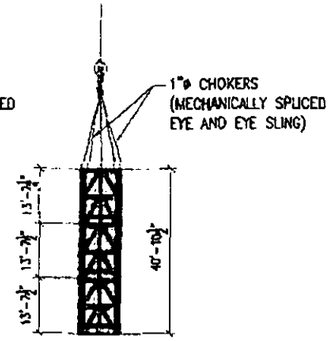

STEP 10

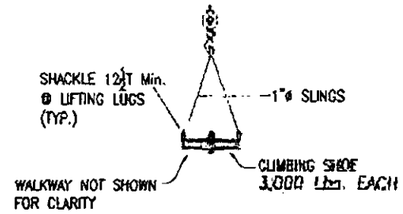

a) TIE ARMS OF 1st. HALF SHOE TO THE TOWER.
b) UNLOCK & UNBOLT THE 2nd. HALF SHOE.
c) REMOVE THE 2nd. HALF SHOE.
d) USE SIMILAR LIFTING GEARS & REMOVE THE OTHER HALF SHOE.

STEP 11

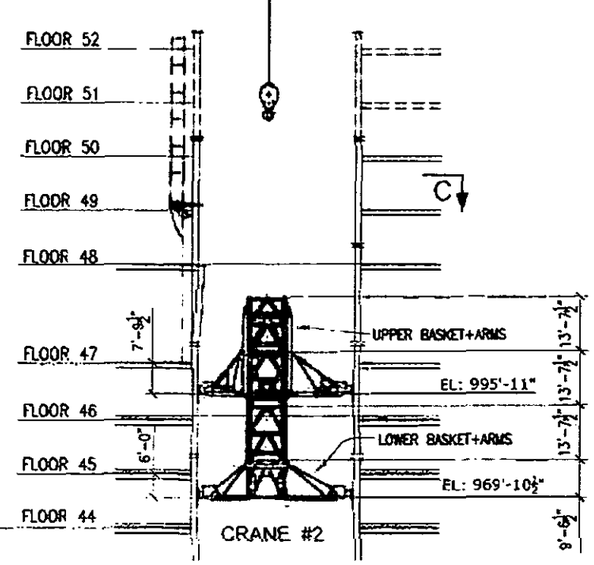

ERECTOR NOTE

THIS BEAM SHALL BE ERECTED AFTER CRANE #2 IS COMPLETELY REMOVED
(TYP. FOR FLOOR 49 THRU. 52)

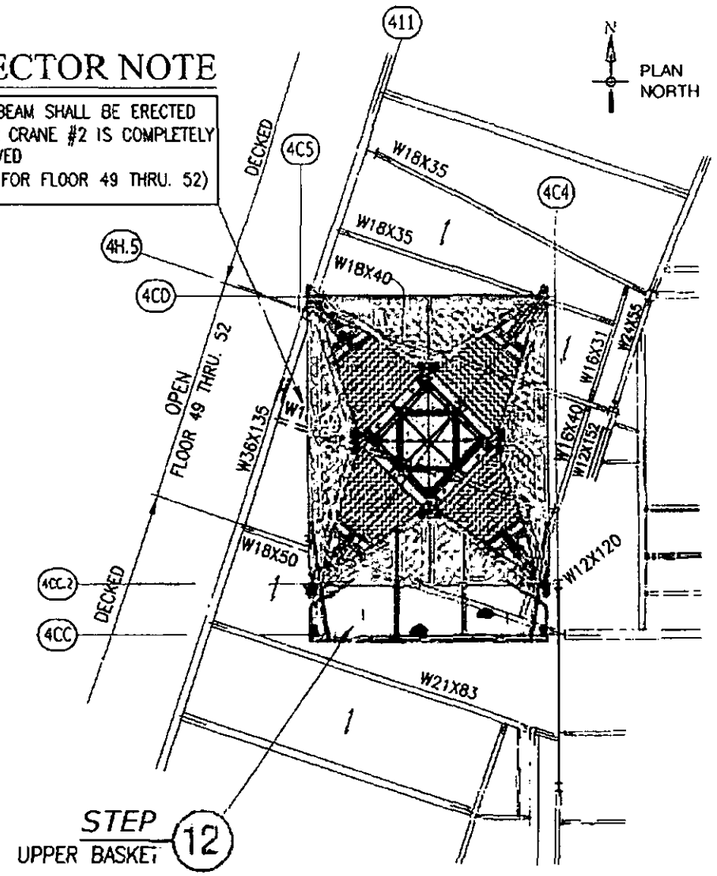

STEP 12
UPPER BASKET

WALKWAY EXTENSION @ UPPER BASKET
REMOVE GRIP STRUTS.
UNBOLT WALKWAY FROM BASKET.
REMOVE IN PIECES OR COMPLETE SET.
TOTAL WT.= 2,050 Lbs.

SECTION `C'
(FRAMING SHOWN IS SIMILAR AT 49th FLOOR THRU. 52)

STATE OF NEW YORK · GREGORY VIDOSIC · No. 070360 · LICENSED PROFESSIONAL ENGINEER
12.9.11

STEP 9 Thru. 12

WORK THIS DWG. WITH DWGs.LP-43, LE-27.1

REV.	DATE	DESCRIPTION
0	Dec. 6/2011	FOR APPROVAL

DCM Erectors, Inc.
DCM ERECTORS INC.
STRUCTURAL STEEL & MISCELLANEOUS METALS
77 Bellfield Rd., Suite 100, Etobicoke, Ontario, Canada M9W 1G6, Tel: (416) 241-6967, Fax: (416) 241-3239
110 East 42nd Street, Suite 1704, New York, N.Y. 10017, Tel: (212) 559-1603, Fax: (212) 599-1615

PROJECT:	WORLD TRADE CENTER - TOWER 4
SITE:	150 Greenwich Street, New York, N.Y.
CLIENT:	TISHMAN CONSTRUCTION CORP.
TITLE:	DISMANTLING CRANE 2 (FAVCO M760D) USING CRANE 2A
CONTRACT No:	843
DRAWN:	Sam Dec. 6/2011
CHECKED:	
SCALE:	
P.CK:	
DRAWING No:	LE-27.4

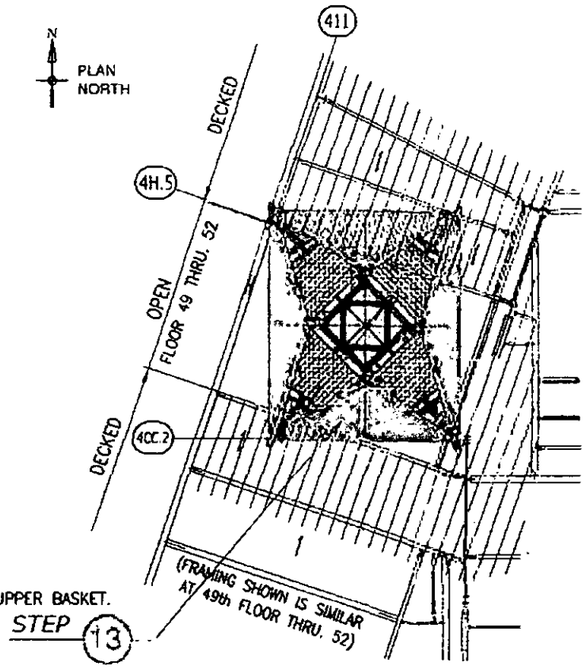

UPPER BASKET.
STEP (13)

REMOVE WALKWAY ON 4 SIDES
a) GRATINGS - WT.= 2,000 Lbs.
b) L4x4 - WT.= 400 Lbs.
c) W18 BEAMS - WT.= 4,800 Lbs.

SECTION 'C'
(REF. DWG. LE-27.4)

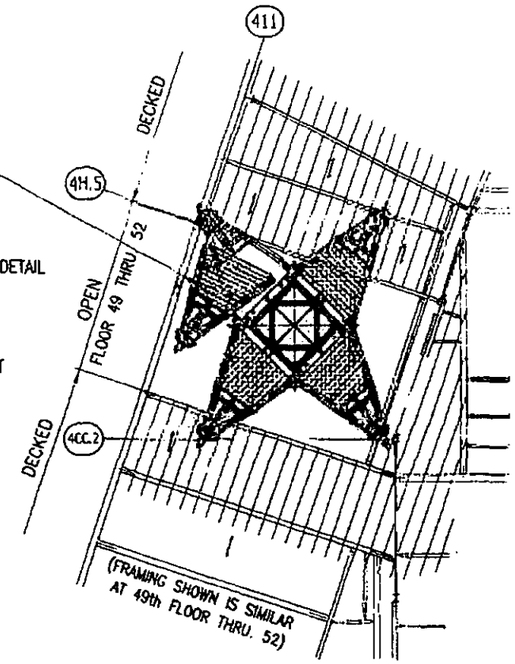

UPPER BASKET.
STEP (14)

REMOVE BASKET OUTRIGGER ARM-1
TOTAL WT.= 13,000 Lbs.
a) ADD LIFTING GEARS AS PER TYP. DETAIL
b) RETRACT FOOT.
c) UNBOLT TOP & BOTTOM FROM UPPER BASKET.
d) ROTATE FOR CLEAR SPACE TO LIFT & REMOVE THIS ARM.

SECTION 'C'
(REF. DWG. LE-27.4)

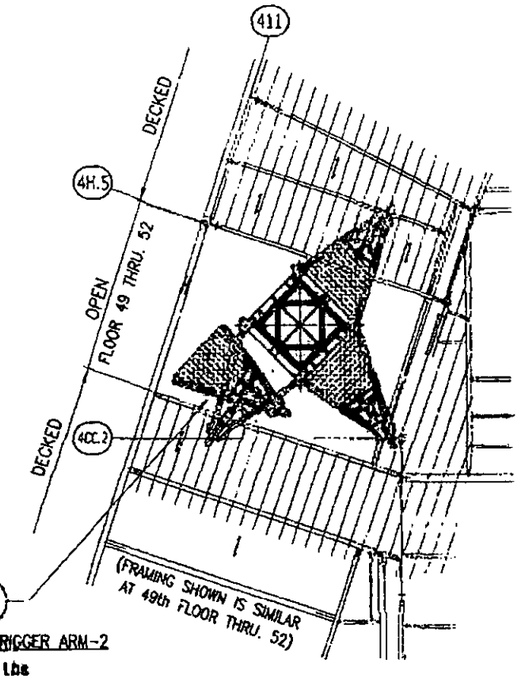

UPPER BASKET.
STEP (15)

REMOVE BASKET OUTRIGGER ARM-2
TOTAL WT.= 13,000 Lbs.
a) ADD LIFTING GEARS AS PER TYP. DETAIL
b) RETRACT FOOT.
c) UNBOLT TOP & BOTTOM FROM UPPER BASKET.
d) ROTATE FOR CLEAR SPACE TO LIFT & REMOVE THIS ARM.

SECTION 'C'
(REF. DWG. LE-27.4)

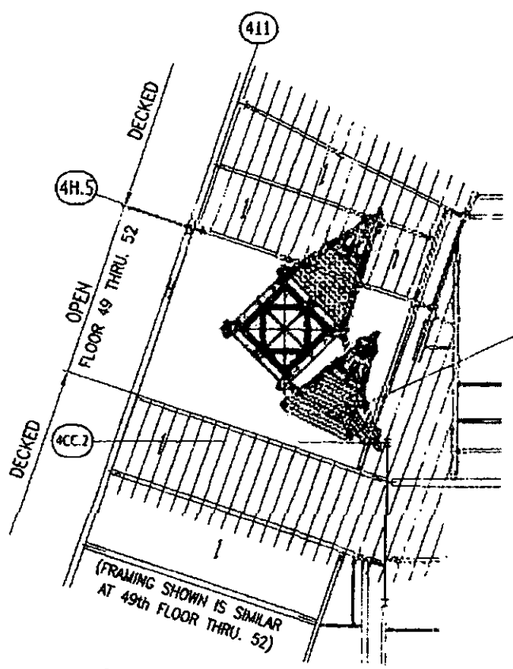

UPPER BASKET.
STEP (16)

REMOVE BASKET OUTRIGGER ARM-3
TOTAL WT.= 13,000 Lbs.
a) ADD LIFTING GEARS AS PER TYP. DETAIL
b) RETRACT FOOT.
c) UNBOLT TOP & BOTTOM FROM UPPER BASKET.
d) ROTATE FOR CLEAR SPACE TO LIFT & REMOVE THIS ARM.

SECTION 'C'
(REF. DWG. LE-27.4)

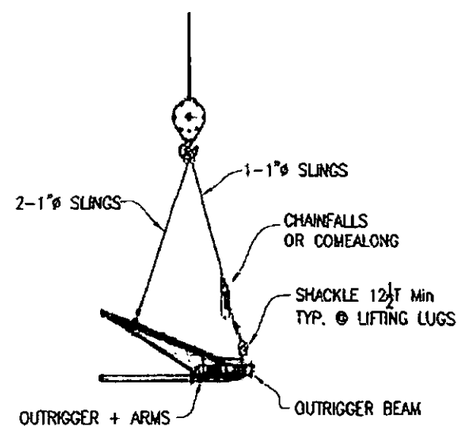

TYPICAL LIFTING GEARS FOR BASKET ARMS

STATE OF NEW YORK
GREGORY VIDGOR
No. 070950
LICENSED PROFESSIONAL ENGINEER
12.9.11

STEP (13) Thru. (16)

WORK THIS DWG. WITH DWGs.LP-43, LE-27.1

REV.	DATE	DESCRIPTION
0	Dec. 6/2011	FOR APPROVAL

PROJECT: WORLD TRADE CENTER - TOWER 4
SITE: 150 Greenwich Street, New York, N.Y.
CLIENT: TISHMAN CONSTRUCTION CORP.
TITLE: DISMANTLING CRANE 2 (FAVCO M760D) USING CRANE 2A
CONTRACT No. 843
DRAWN: Sajo Dec. 6/2011
SCALE:
DRAWING No. LE-27.5 0

DCM Erectors, Inc.
DCM ERECTORS INC.
STRUCTURAL STEEL & MISCELLANEOUS METALS
7 Belfield Rd., Suite 100
Etobicoke, Ontario
Canada M9W 1G6
Tel: (416) 241-6967
Fax: (416) 241-3239
110 East 42nd Street
Suite 1704
New York, N.Y. 10017
Tel: (212) 599-1603
Fax: (212) 599-1615

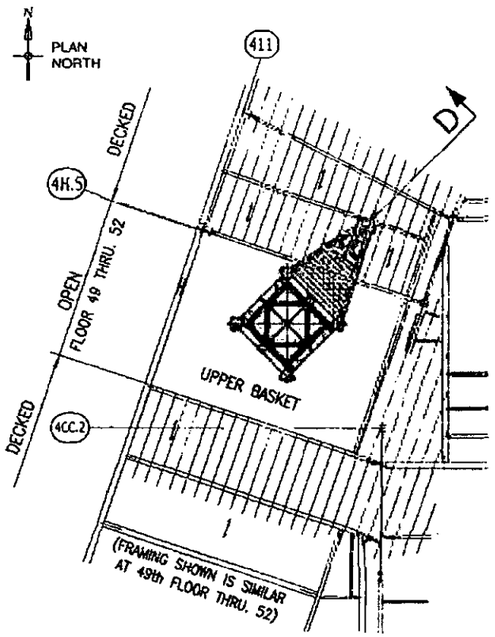

SECTION 'C'
(REF. DWG. LE-27.4)

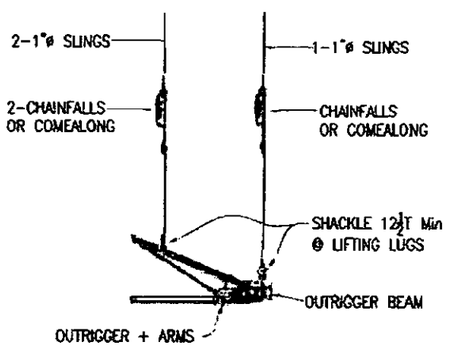

TYPICAL LIFTING GEARS
FOR BASKET ARM

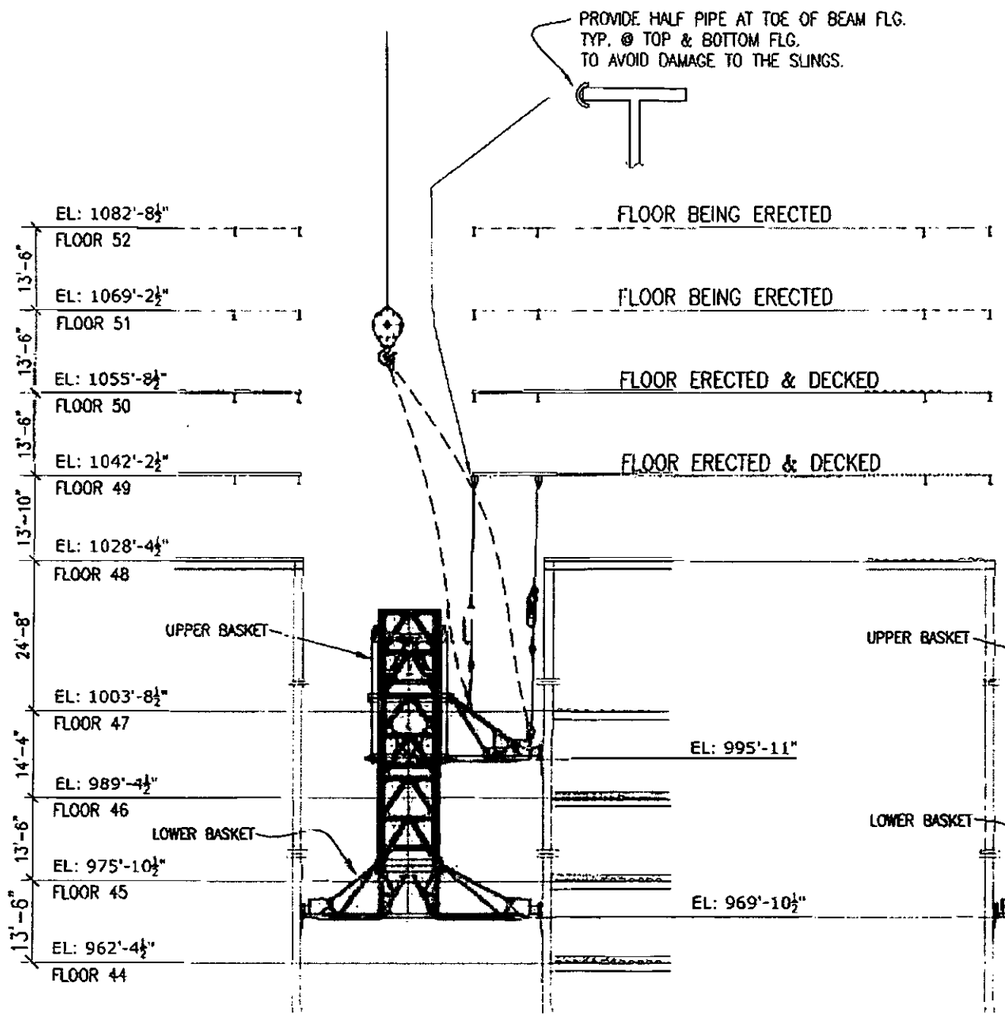

LIFTING GEARS TO ARM-4

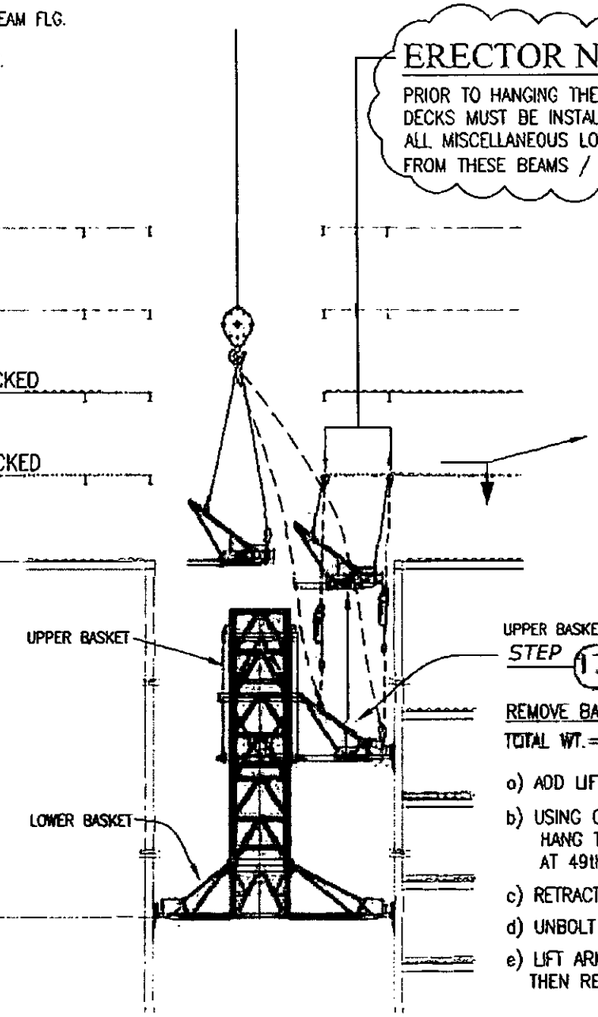

REMOVING ARM-4

ERECTOR NOTE

PRIOR TO HANGING THE ARM-4 FROM THESE BEAMS, DECKS MUST BE INSTALLED AND FULLY WELDED. ALL MISCELLANEOUS LOADS TO BE CLEARD FROM THESE BEAMS / AREA.

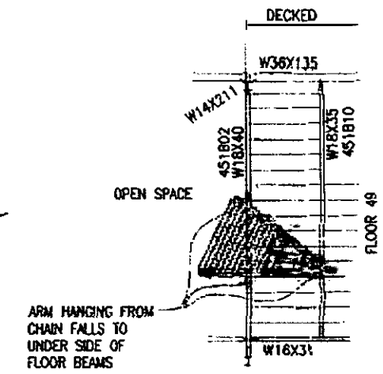

UPPER BASKET
STEP (17)

REMOVE BASKET OUTRIGGER ARM-4

TOTAL WT.= 13,000 Lbs.

a) ADD LIFTING GEARS AS PER TYP. DETAIL
b) USING CHAIN FALLS OR COME ALONG, HANG THE ARM FROM THE FLOOR BEAMS AT 49th FLOOR.
c) RETRACT FOOT.
d) UNBOLT TOP & BOTTOM FROM UPPER BASKET.
e) LIFT ARM-4 USING CHAIN FALLS. THEN REMOVE BY CRANE 2A

SECTION 'D'

STATE OF NEW YORK — GREGORY VIDOSO — No. 079880 — LICENSED PROFESSIONAL ENGINEER
12.9.11

STEP (17)

WORK THIS DWG. WITH DWGs.LP-43, LE-27.1

REV.	DATE	DESCRIPTION
0	Dec. 8/2011	FOR APPROVAL

DCM Erectors, Inc.

STRUCTURAL STEEL & MISCELLANEOUS METALS

77 Belfield Rd., Suite 100
Etobicoke, Ontario
Canada M9W 1G6
Tel: (416) 241-6967
Fax: (416) 241-3239

110 East 42nd Street
Suite 1704
New York, N.Y. 10017
Tel: (212) 599-1603
Fax: (212) 599-1615

PROJECT:	WORLD TRADE CENTER - TOWER 4
SITE:	150 Greenwich Street, New York, N.Y.
CLIENT:	TISHMAN CONSTRUCTION CORP.
TITLE:	DISMANTLING CRANE 2 (FAVCO M760D) USING CRANE 2A
CONTRACT No	843
DRAWING No	LE-27.6
SCALE:	
BLOCK:	

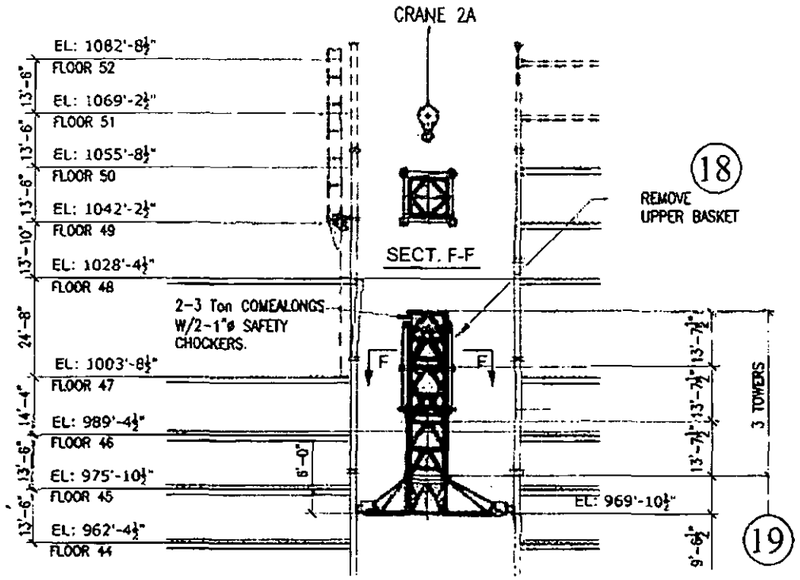

CRANE #2
LOOKING NORTH

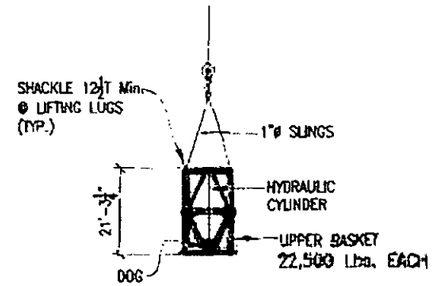

a) TIE TOP ARMS OF 1st. HALF UPPER BASKET TO THE TOWER.
b) UNLOCK & UNBOLT THE 2nd. HALF UPPER BASKET.
c) REMOVE THE 2nd. HALF UPPER BASKET.
d) USE SIMILAR LIFTING GEARS & REMOVE THE OTHER HALF OF UPPER BASKET.

STEP 18

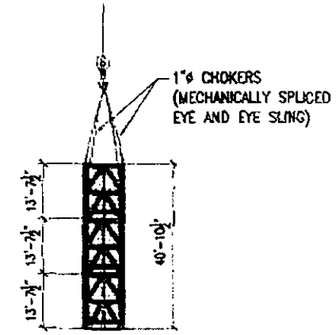

TOTAL WT.=37,800 Lbs.

STEP 19

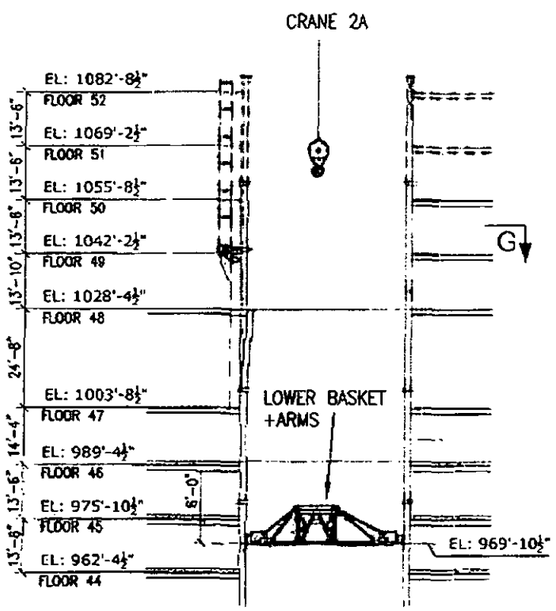

CRANE #2
LOOKING NORTH

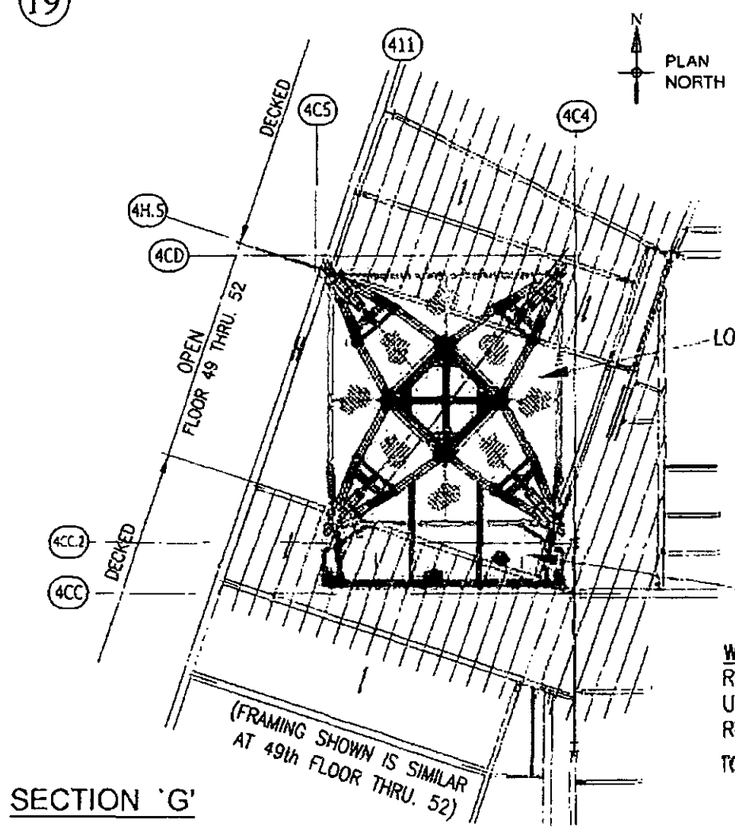

SECTION 'G'

STEP 20

WALKWAY EXTENSION @ LOWER BASKET
REMOVE GRIP STRUTS.
UNBOLT WALKWAY FROM BASKET.
REMOVE IN PIECES OR COMPLETE SET.
TOTAL WT.= 2,500 Lbs.

STEP 18 Thru. 20

WORK THIS DWG. WITH DWGs.LP-43, LE-27.1

REV.	DATE	DESCRIPTION
0	Dec. 7/2011	FOR APPROVAL

DCM Erectors, Inc.
STRUCTURAL STEEL & MISCELLANEOUS METALS
77 Belfield Rd., Suite 106, Etobicoke, Ontario, Canada M9W 1G6, Tel: (416) 241-6967, Fax: (416) 241-3739
216 East 42nd Street, Suite 1704, New York, N.Y. 10017, Tel: (212) 599-1603, Fax: (212) 599-1615

PROJECT:	WORLD TRADE CENTER - TOWER 4
SITE:	150 Greenwich Street, New York, N.Y.
CLIENT:	TISHMAN CONSTRUCTION CORP.
TITLE:	DISMANTLING CRANE 2 (FAVCO M760D) USING CRANE 2A
CONTRACT No.	843
DRAWN:	Sam Dec. 7/2011
CHECKED:	
SCALE:	
BLOCK:	
DRAWING No:	LE-27.7 0

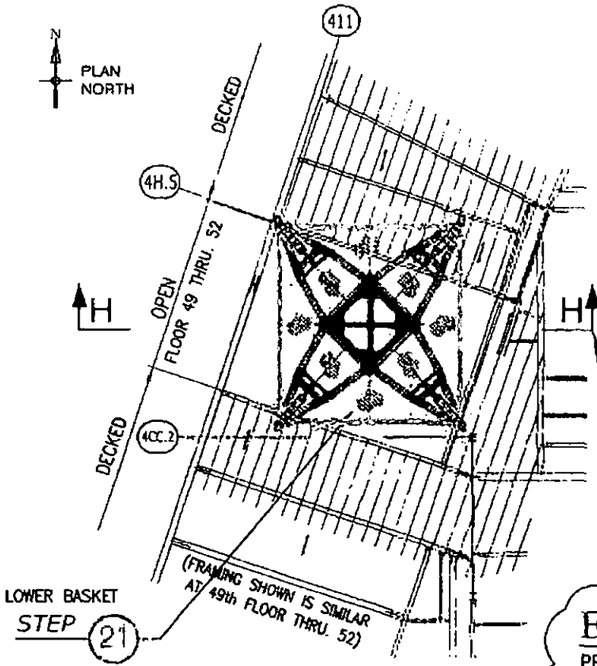

LOWER BASKET
STEP 21

REMOVE WALKWAY ON 4 SIDES
a) GRATINGS - WT.= 2,600 Lbs
b) L4x4 - WT.= 400 Lbs.
c) W18 BEAMS - WT.= 4,960 Lbs.

SECTION 'G'
(REF. DWG. LE-27.7)

LOWER BASKET
STEP 22

REMOVE BASKET OUTRIGGER ARM-1
TOTAL WT.= 13,500 Lbs.
a) ADD LIFTING GEARS AS PER TYP. DETAIL
b) RETRACT FOOT.
c) UNBOLT TOP & BOTTOM FROM LOWER BASKET.
d) ROTATE FOR CLEAR SPACE TO LIFT & REMOVE THIS ARM.

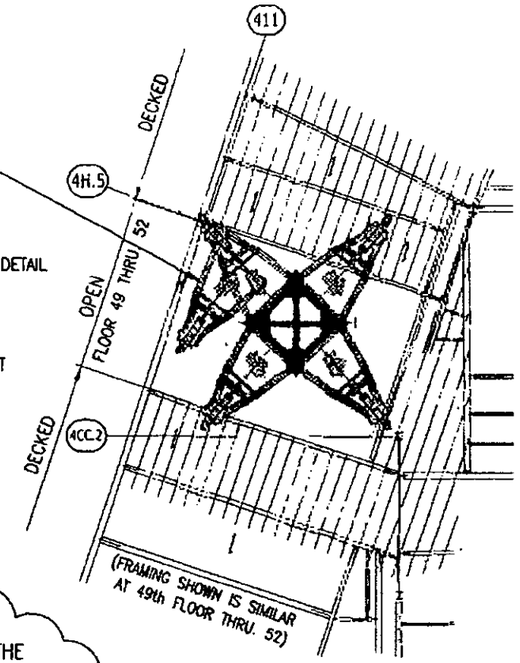

SECTION 'G'
(REF. DWG. LE-27.7)

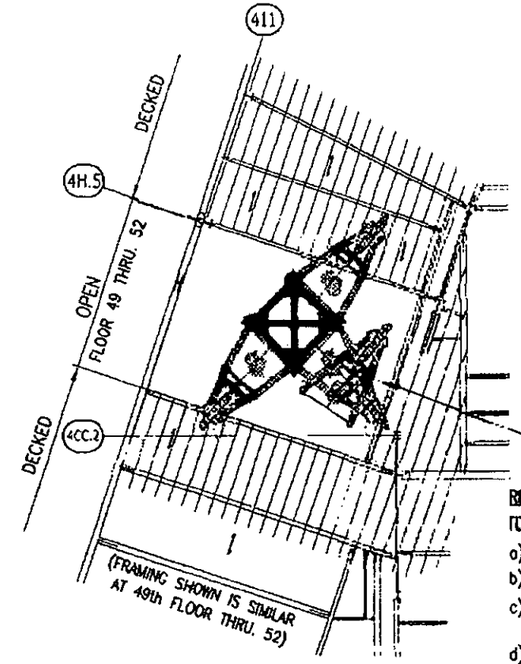

LOWER BASKET
STEP 23

REMOVE BASKET OUTRIGGER ARM-3
TOTAL WT.= 13,500 Lbs.
a) ADD LIFTING GEARS AS PER TYP. DETAIL
b) RETRACT FOOT.
c) UNBOLT TOP & BOTTOM FROM LOWER BASKET.
d) ROTATE FOR CLEAR SPACE TO LIFT & REMOVE THIS ARM.

SECTION 'G'
(REF. DWG. LE-27.7)

ERECTOR NOTE.1

PRIOR TO REMOVING THE ARMS ,TIE THE LOWER BASKET TO 47th. FLOOR AS SHOWN IN SECTION H-H.
(FOR STABILIZING THE ROLLING)

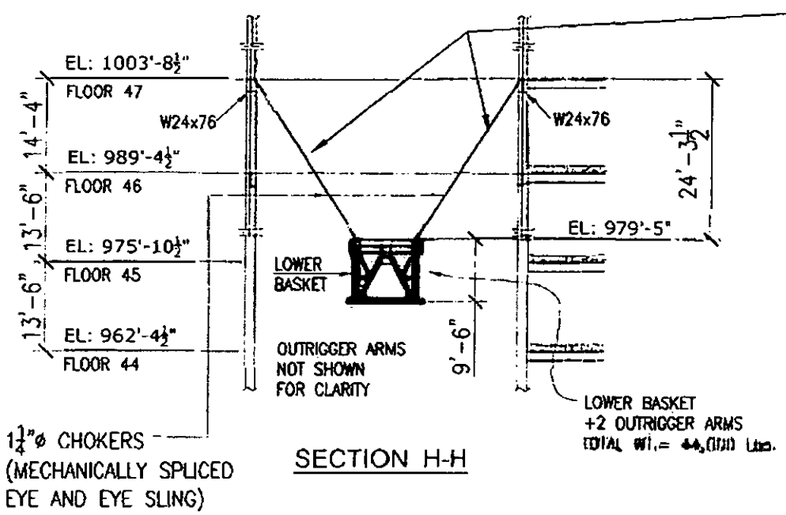

SECTION H-H

ERECTOR NOTE.2

1. TOP END OF CHOCKER IS WRAPPED ON TO FLOOR BEAMS AT 47th. FLOOR (TYP BOTH SIDES OF THE BASKET)
2. BOTTOM END OF CHOCKER IS WRAPPED ON TOP CHORD OF LOWER BASLET (TYP BOTH SIDES OF THE BASKET)
3. THESE CABLES ARE FOR STABILIZING THE ROLLING ONLY. LOWER BASKET DOES NOT HANG FROM THESE CABLES.

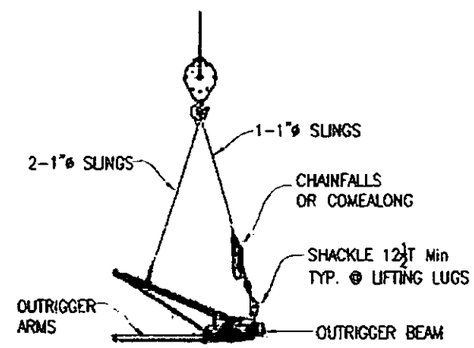

TYPICAL LIFTING GEARS FOR BASKET ARMS

STEP 21 Thru. 23

WORK THIS DWG. WITH DWGs.LP-43, LE-27.1

REV.	DATE	DESCRIPTION
0	Dec. 7/2011	FOR APPROVAL

DCM Erectors, Inc.
STRUCTURAL STEEL & MISCELLANEOUS METALS
73 Belfield Rd., Suite 100, Etobicoke, Ontario, Canada M9W 1G6, Tel: (416) 241-0967, Fax: (416) 241-5239
130 East 42nd Street, Suite 1704, New York, N.Y. 10017, Tel: (212) 599-1003, Fax: (212) 599-1085

PROJECT:	WORLD TRADE CENTER - TOWER 4
SITE:	150 Greenwich Street, New York, N.Y.
CLIENT:	TISHMAN CONSTRUCTION CORP.
TITLE:	DISMANTLING CRANE 2 (FAVCO M760D) USING CRANE 2A
CONTRACT No:	843
DRAWN:	Sam Dec. 7/2011
CHECKED:	
SCALE:	
DRAWING No:	LE-27.8 △0

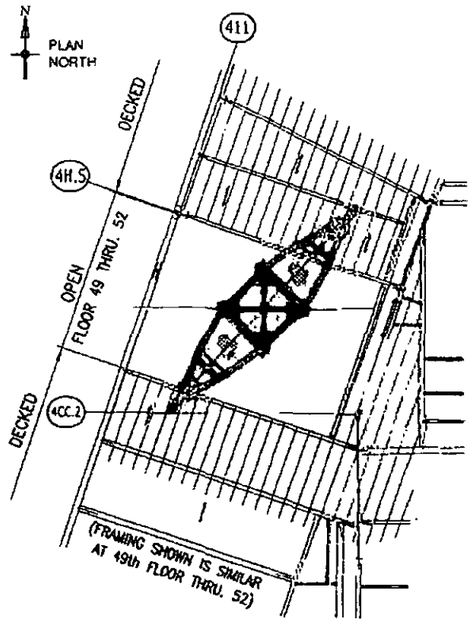

STEP 24 PLAN AT 49th. FLOOR

1. LOWER BASKET + 2 ARMS SUPPORTED BY 2 OUTRIGGER FOOT
2. ALSO LOWER BASKET IS ALREADY TIED TO FLOOR 47 FOR STABILIZING ROLLING

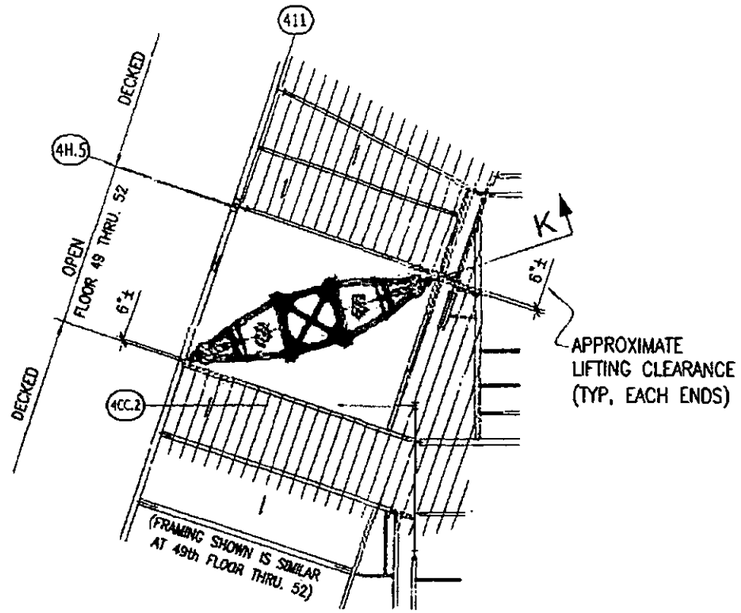

STEP 25 PLAN AT 49th. FLOOR

ERECTOR NOTE

1. ADD 4–1"ø CHOKERS (MECHANICALLY SPLICED) FROM CRANE HOOK TO 4 SIDES OF LOWER BASKET TOP CHORD.
2. REMOVE BOTH CABLES ALREADY TIED WITH LOWER BASKET TO 47th. FLOOR.
3. RETRACT FOOT FULLY CLOSE ENOUGH TO BACK OF THE OUTRIGGER BOX.
4. LIFT THE ASSEMBLY ABOVE 48th. FLOOR. ROTATE THE WHOLE ASSEMBLY AS SHOWN. TO CLEAR FLOOR FRAMING AT 49th. FLOOR (SIMILAR FRAMING AT 49th. THRU. 52nd. FLOOR)
5. START LIFTING THE ASSEMBLY SHOWN. & MOVE ON TO THE TRUCK.

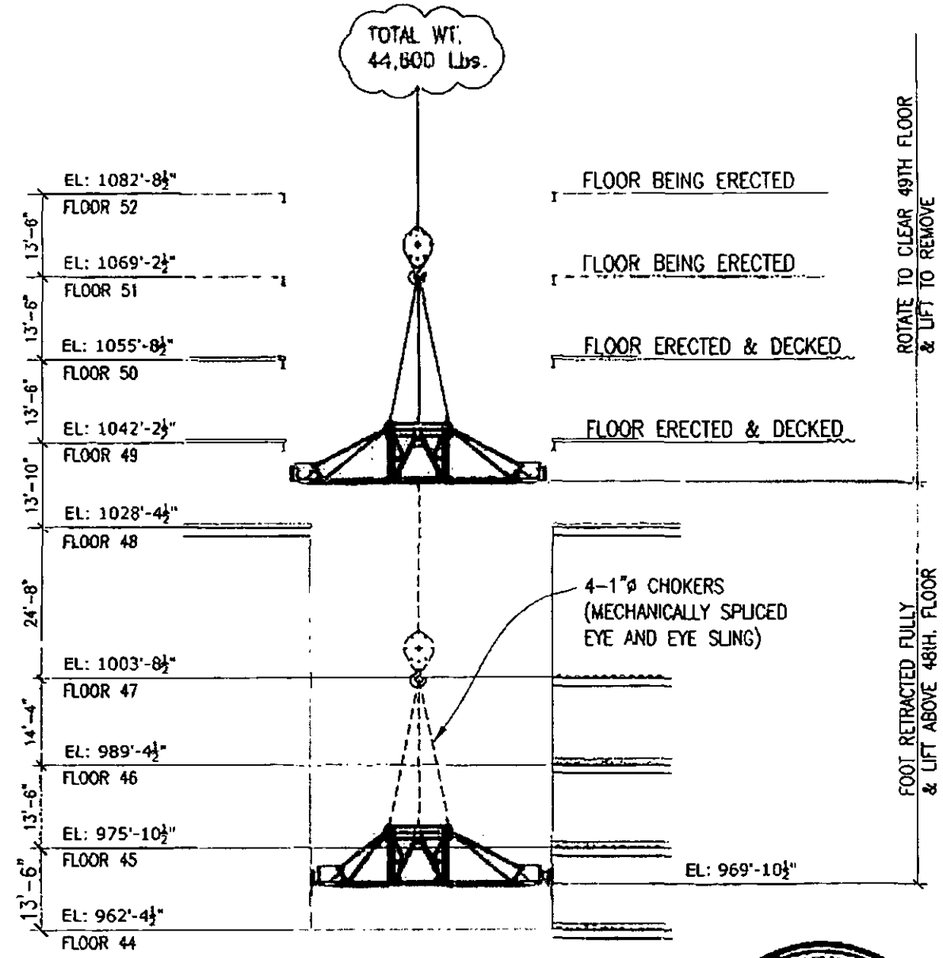

STEP 25

SECTION 'K'

STATE OF NEW YORK · GREGORY VOGEL · No. 071360 · LICENSED PROFESSIONAL ENGINEER

12-9-11

STEP 24 & 25

WORK THIS DWG. WITH DWGs.LP-43, LE-27.1

REV.	DATE	DESCRIPTION
0	Dec. 8/2011	FOR APPROVAL

DCM Erectors, Inc.

STRUCTURAL STEEL & MISCELLANEOUS METALS

77 Belfield Rd., Suite 100, Etobicoke, Ontario, Canada M9W 1G6, Tel: (416) 241-6967, Fax: (416) 241-3739

110 East 42nd Street, Suite 1704, New York, N.Y. 10017, Tel: (212) 599-1603, Fax: (212) 599-1615

PROJECT:	WORLD TRADE CENTER - TOWER 4
SITE:	150 Greenwich Street, New York, N.Y.
CLIENT:	TISHMAN CONSTRUCTION CORP.
TITLE:	DISMANTLING CRANE 2 (FAVCO M760D) USING CRANE 2A
CONTRACT No.	843
DRAWN:	Sam Dec. 8/2011
CHECKED:	
SCALE:	
BLOCK:	
DRAWING No.	LE-27.9

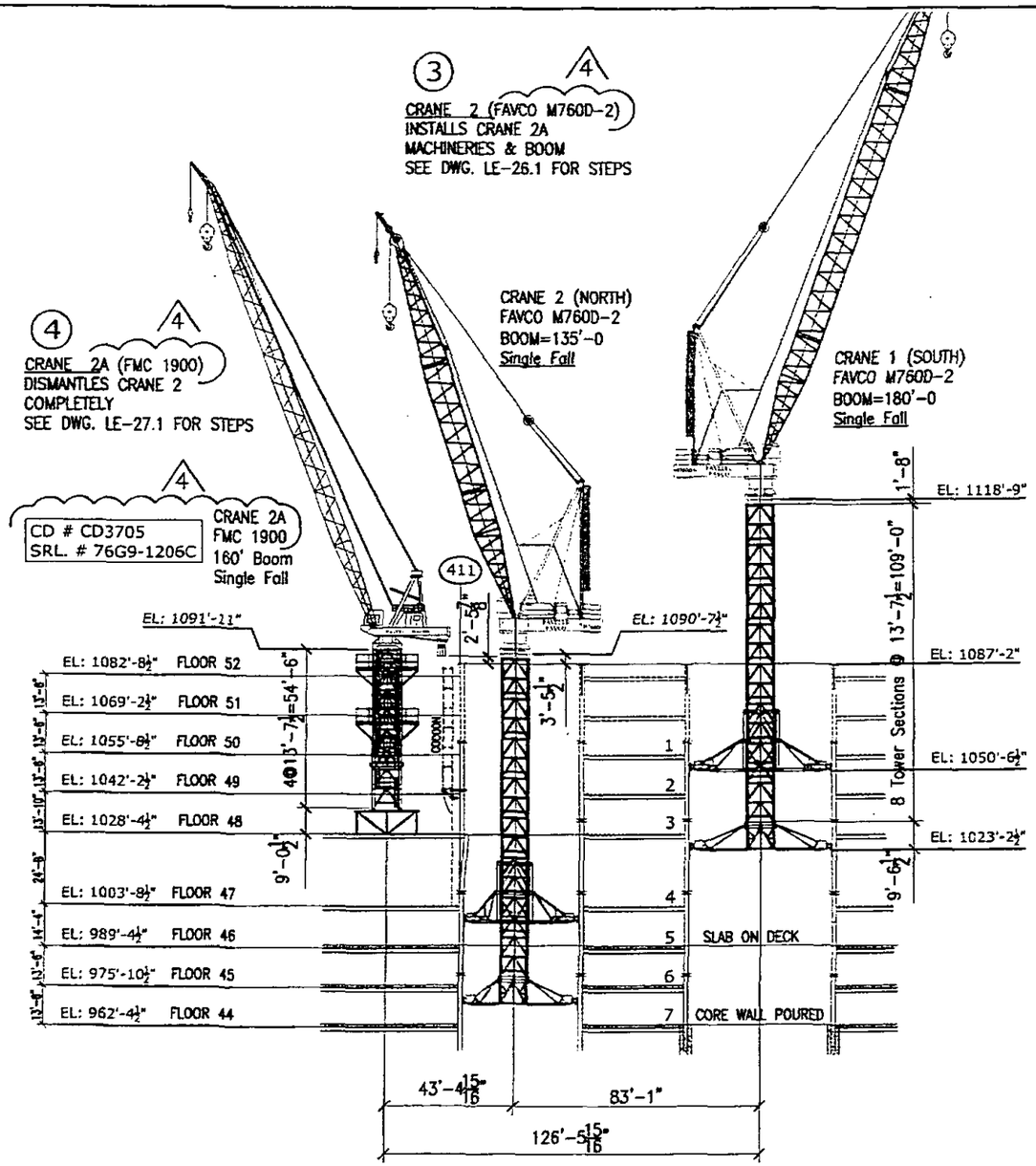

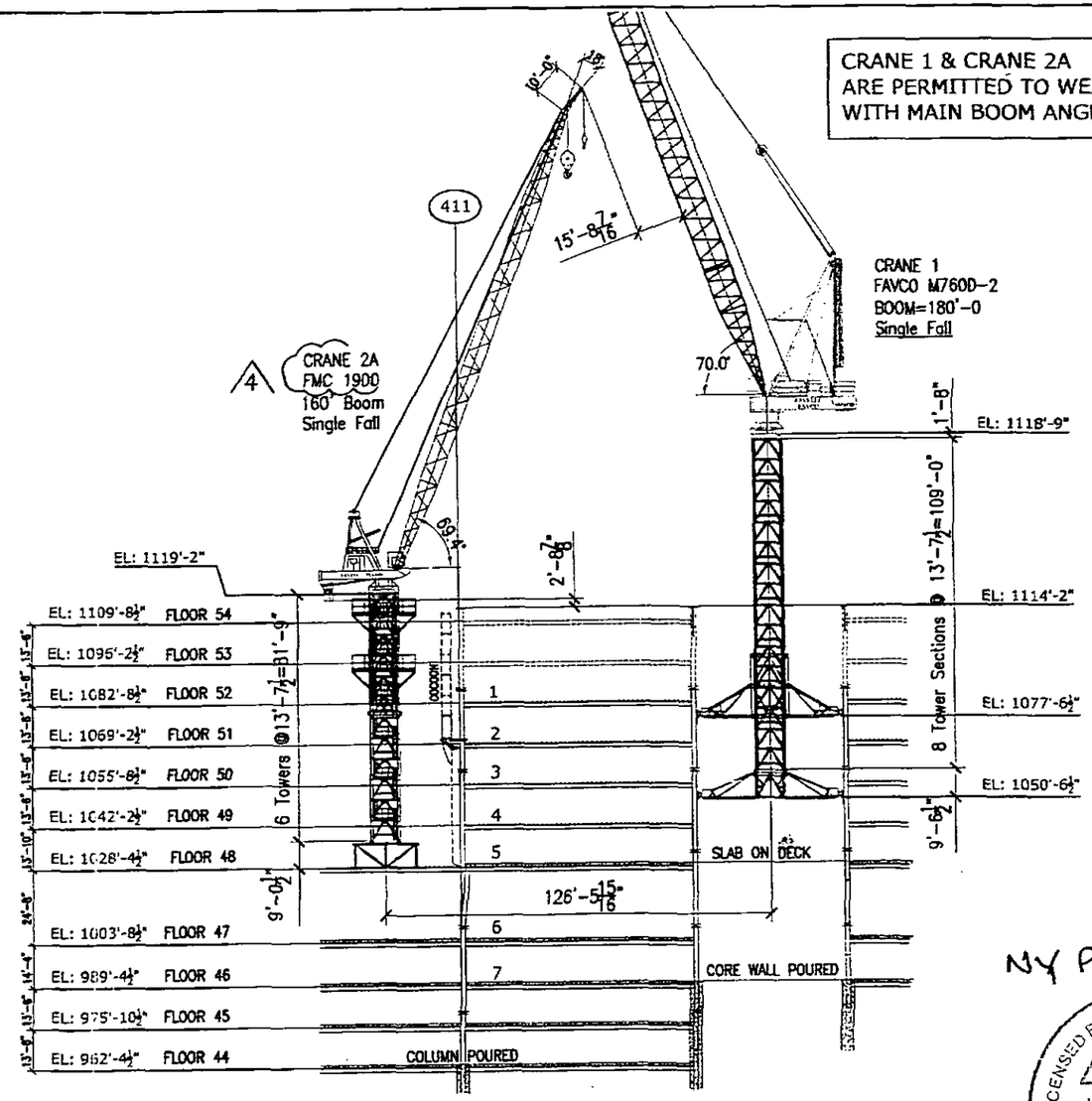

NY PERMIT LP0368

LICENSED PROFESSIONAL ENGINEER
L. JURIMAE
PROVINCE OF ONTARIO

NOV 15, 2011

SEQ. #29

1. CRANE 1 JUMPED TO 50th. FLOOR.
2. CRANE 2 STAYS AT 47th. FLOOR
3. CRANE 2 INSTALLS CRANE 2A MACHINERIES & BOOM (SEE DWG. LE-26.1 FOR STEPS)
4. CRANE 2A DISMANTLES CRANE 2 COMPLETELY (SEE DWG. LE-27.1 FOR STEPS)
5. CRANE 1 ERECTS FLOORS 51 & 52.

SEQ. #30

1. CRANE 1 JUMPED TO 52nd. FLOOR.
2. 2 MORE TOWER SECTIONS ADDED TO CRANE 2A.
3. CRANE 1 & CRANE 2A *ERECT FLOORS 53 & 54*

ERECT FLOORS 51, 52, 53, 54

WORK THIS DWG. WITH DWG. LP-37, LE-25.3

REV.	DATE	DESCRIPTION
4	Oct. 17/2011	CRANE 2A CORRECTED TO SHOW FMC 1900
3	Oct. 8/2011	REFERENCE DWG. SHOWN FOR STEP 3 & STEP 4
2	Oct. 4/2011	DWG. COMPLETELY REVISED PER DISCUSSION
1	Sep. 19/2011	CRANE #2A NUMBER OF TOWER SECTIONS REVISED
0	Sep. 14/2011	FOR APPROVAL

DCM Erectors, Inc.
DCM ERECTORS INC.
STRUCTURAL STEEL & MISCELLANEOUS METALS
77 Belfield Rd., Suite 100, Etobicoke, Ontario, Canada M9W 1G6, Tel: (416) 241-6967, Fax: (416) 241-3239
110 East 42nd Street, Suite 1710, New York, N.Y. 10017, Tel: (212) 599-1603, Fax: (212) 599-1615

PROJECT:	WORLD TRADE CENTER TOWER 4
SITE:	150 Greenwich Street, New York, N.Y.
CLIENT:	TISHMAN CONSTRUCTION CORP.
TITLE:	LOGISTIC ELEVATION FOR CRANE #1 & CRANE #2A
CONTRACT No:	843
DRAWN:	Sam Sep. 14/2011
CHECKED:	
SCALE:	
BLOCK:	
DRAWING No:	LE-25.2 △4

CRANE 2A – PHASE 1.

CHECK OF CRANE 2A BASEFRAME SUPPORTING STRUCTURE FOR PHASE 1 CONSTRUCTION LOADING PRIOR TO CONCRETE EMBEDMENT OF AFFECTED COLUMNS.

CRANE 2A PHASE 1 CONSISTS OF CRANE FREESTANDING ON ITS BASEFRAME WITH UP TO 8 TOWER SECTIONS IN NORMAL IN-SERVICE AND OUT-OF-SERVICE MODES. SEE ALSO SHEETS 16-1 AND 2.

CHECK OF BASEFRAME SUPPORTING COLUMNS 4L/408, 4L/409 AND 4CD/4C6 ARE BASED ON COREWALL COMPLETED CONCRETE AT LEVEL 42 AND TOP OF CONCRETE AT PERIMETER EMBEDDED COLUMNS AT LEVEL 40. TOPMOST POURED SLAB ON DECK IS AT LEVEL 45. FOR THESE CRITERIA, NOTED COLUMNS ARE ADEQUATE (REF SHEETS 19.25 AND 19.26 FOR SUMMARY).

CHECK OF OTHER AFFECTED COLUMNS INCLUDING 4CD/4C5 AND 4CD/4C4 IS ON-GOING AND ITS RESULTING PENDING.

PROJECT	CLIENT	BY J J DATE 10-05-11
		CK ____ DATE ____
KAJ ENGINEERS INC.	CONSULTING ENGINEERS TORONTO, CANADA	RV ____ DATE ____
		PROJECT NO. 8794
		PART 19 SHEET 1 OF ____

INITIAL CONSTRUCTION CONDITIONS WITH CRANE 2A OPERATIONAL

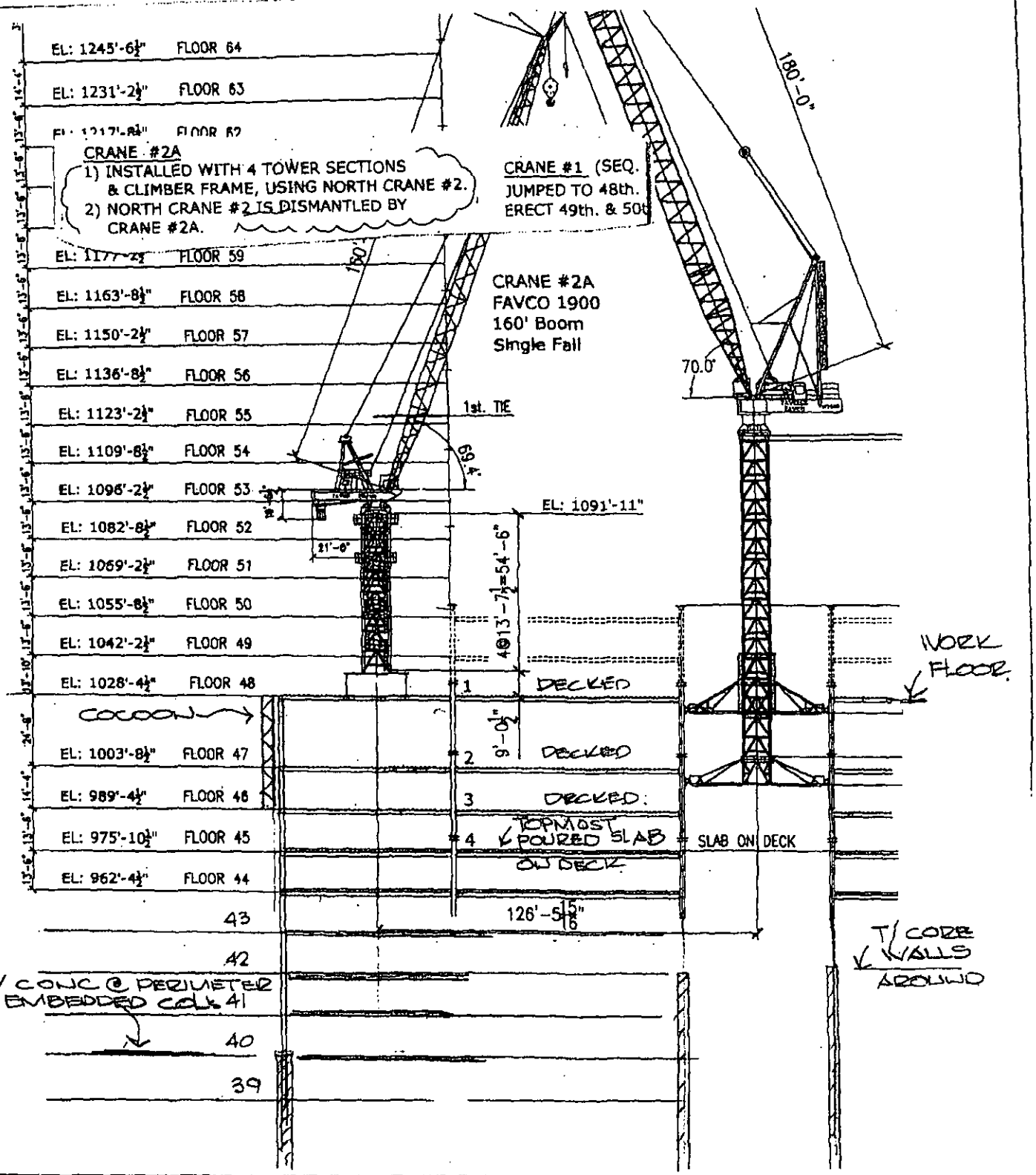

PROJECT	CLIENT	BY JJ DATE 09.20-11
		CK ____ DATE ____
		RV ____ DATE ____
KAJ ENGINEERS INC.	CONSULTING ENGINEERS TORONTO, CANADA	PROJECT NO. 8794
		PART 19 SHEET 2 OF ____

CONSTRUCTION CONDITIONS W/ CRANE 2A AT MAX. FREESTANDING OUT-OF-SERVICE HEIGHT

CRANE #1 & CRANE #2A
ARE PERMITTED TO WEATHERVANE
WITH MAIN BOOM ANGLE AS SHOWN.

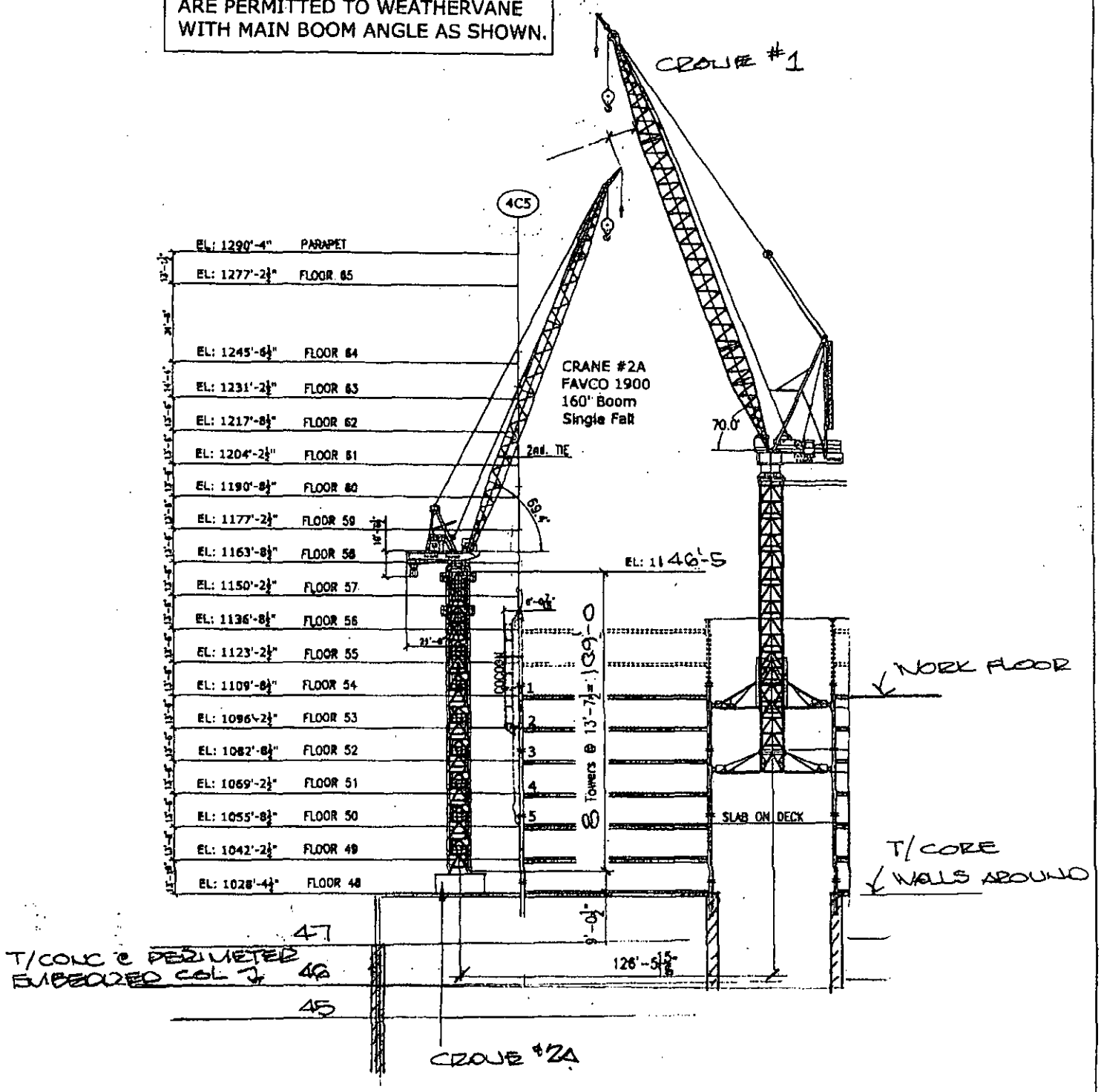

PROJECT	CLIENT	BY JJ DATE 09-20-11
		CK ____ DATE ____
		RV ____ DATE ____
KAJ ENGINEERS INC.	CONSULTING ENGINEERS TORONTO, CANADA	PROJECT NO. 8794
		PART 19 SHEET 3 OF ____

10.7461 [illegible]

LEVELS 38 TO 42 (LEVELS 43 TO 46 SIMILAR)

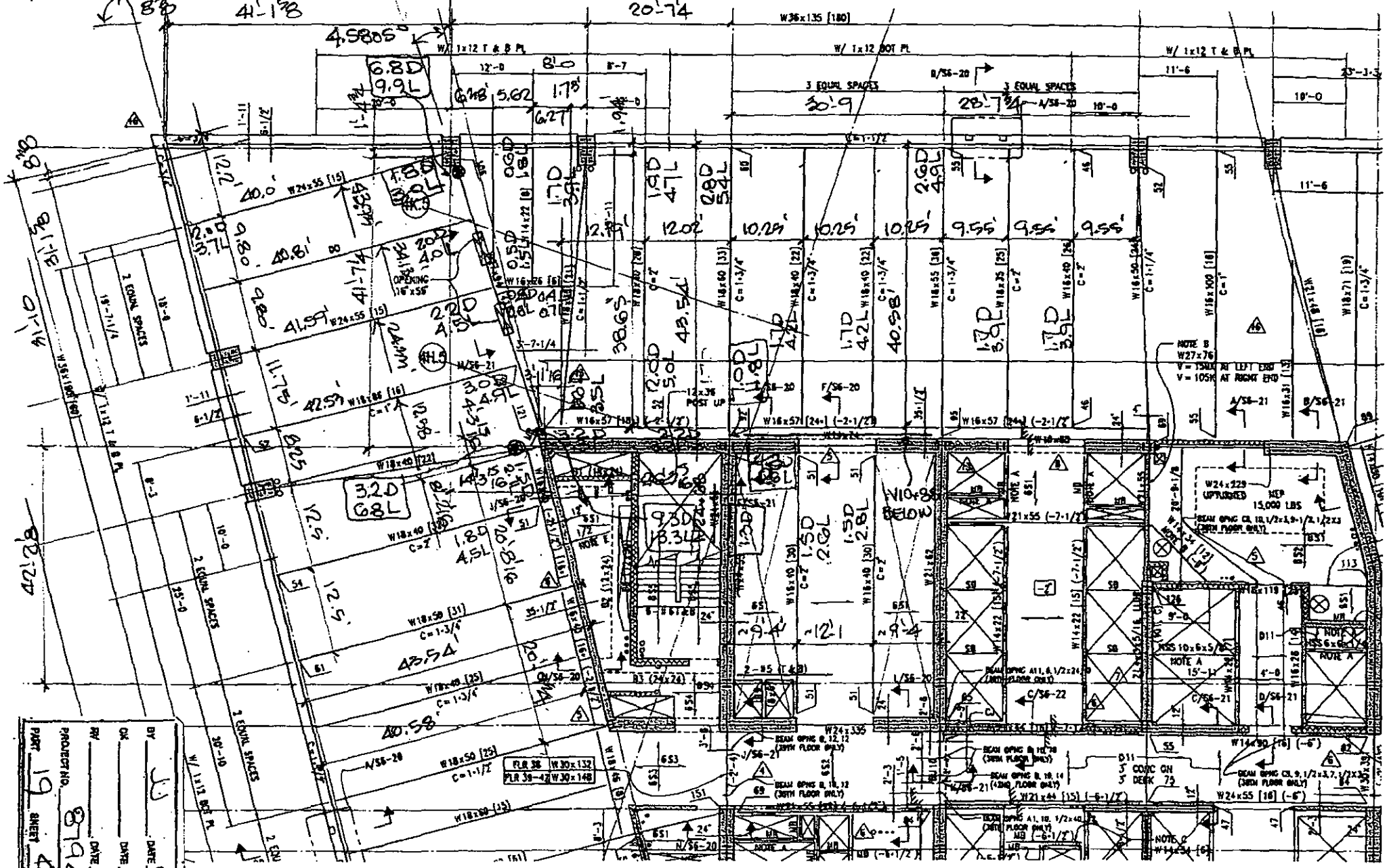

D = BM SELF-WT + 10% + STL DK @ 4 PSF

L = 20 PSF FOR MULTI-LEVELS (I.E. 40% OF 50 PSF)

BY	JJ	DATE 09.20.11
CK		DATE
RV		DATE
PROJECT NO.	8794	
PART 19	SHEET 4	OF

CRANE COL. CONSTRUCTION LOADINGS

LEVEL 47

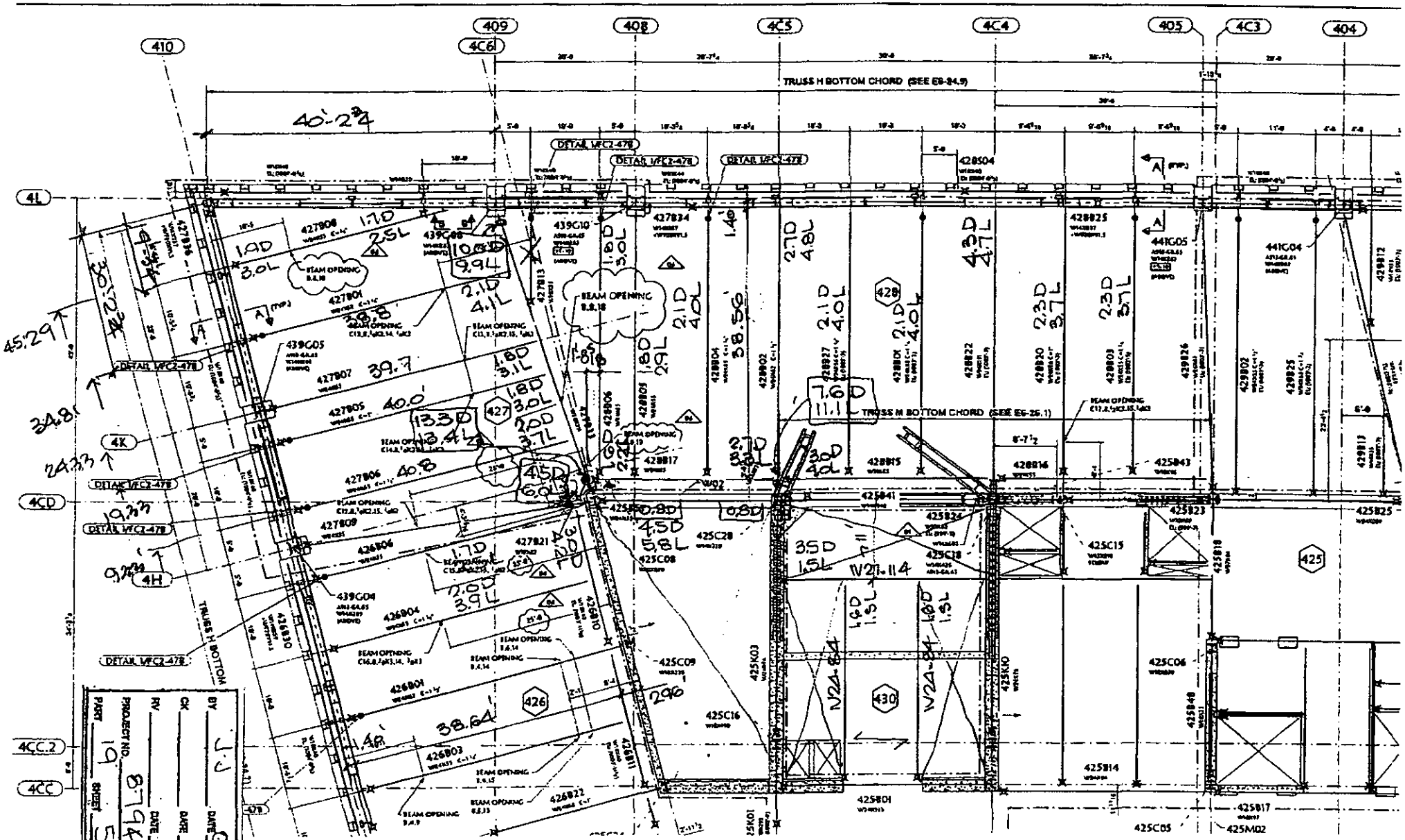

D = BM SELF-WT + 10% + STL DK @ 4 PSF

L = 20 PSF FOR MULT-LEVELS (IE 40% OF 50 PSF)

BY	J.J
DATE	09-20-11
CK	
DATE	
RV	
DATE	
PROJECT NO.	8794
SHEET	5
OF	19

CRANE COL CONSTRUCTION LOADING

LEVEL 48

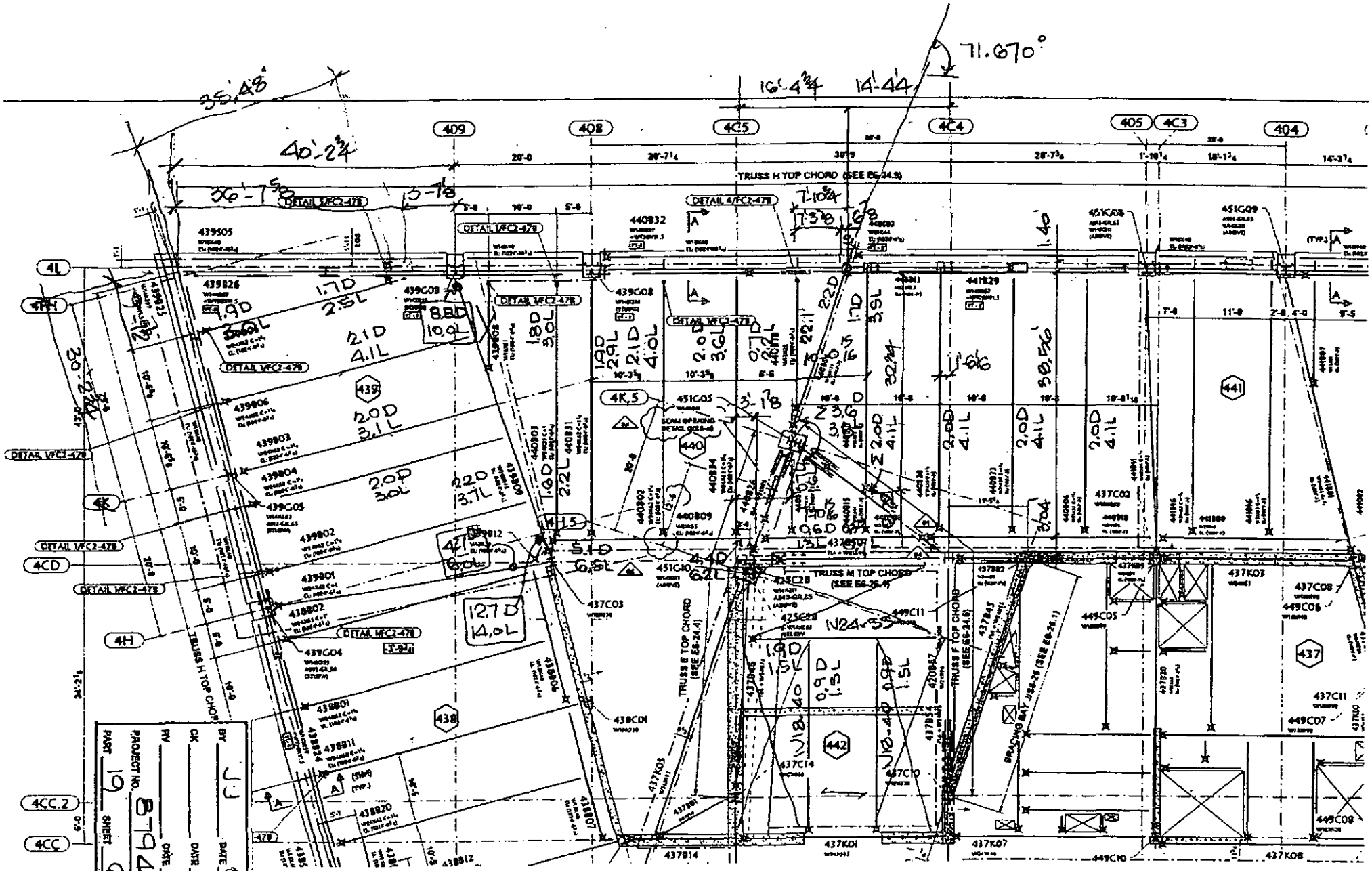

D = BM SELF-WT + 10% + STL DK @ 4 PSF

L = 20 PSF FOR MULTI-LEVELS (I.E. 40% OF 50 PSF)

PART 19	BY J.J.
SHEET 6 OF	DATE 09-20-11
PROJECT NO. B794	CK
	DATE
	RV
	DATE

COL 4L / 408 & 409 CONSTR.
LOAD SUMMARY

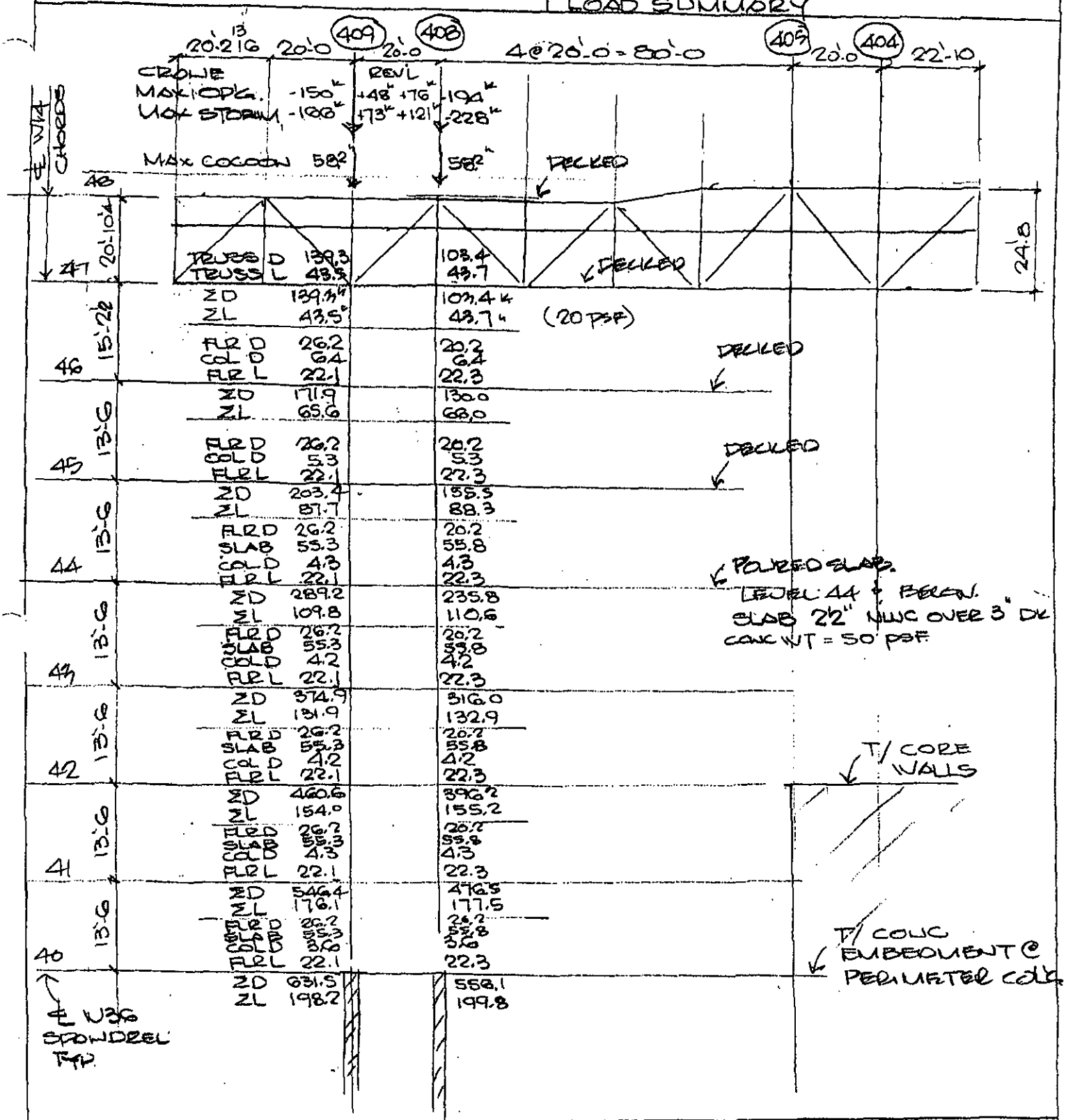

PROJECT	CLIENT	BY JJ DATE 09-20-11
		CK ____ DATE ____
		RV ____ DATE ____
		PROJECT NO. 8794
		PART 19 SHEET 13 OF ____

KAJ ENGINEERS INC. CONSULTING ENGINEERS TORONTO, CANADA

LEVEL 4B CONSTR. LAYOUT

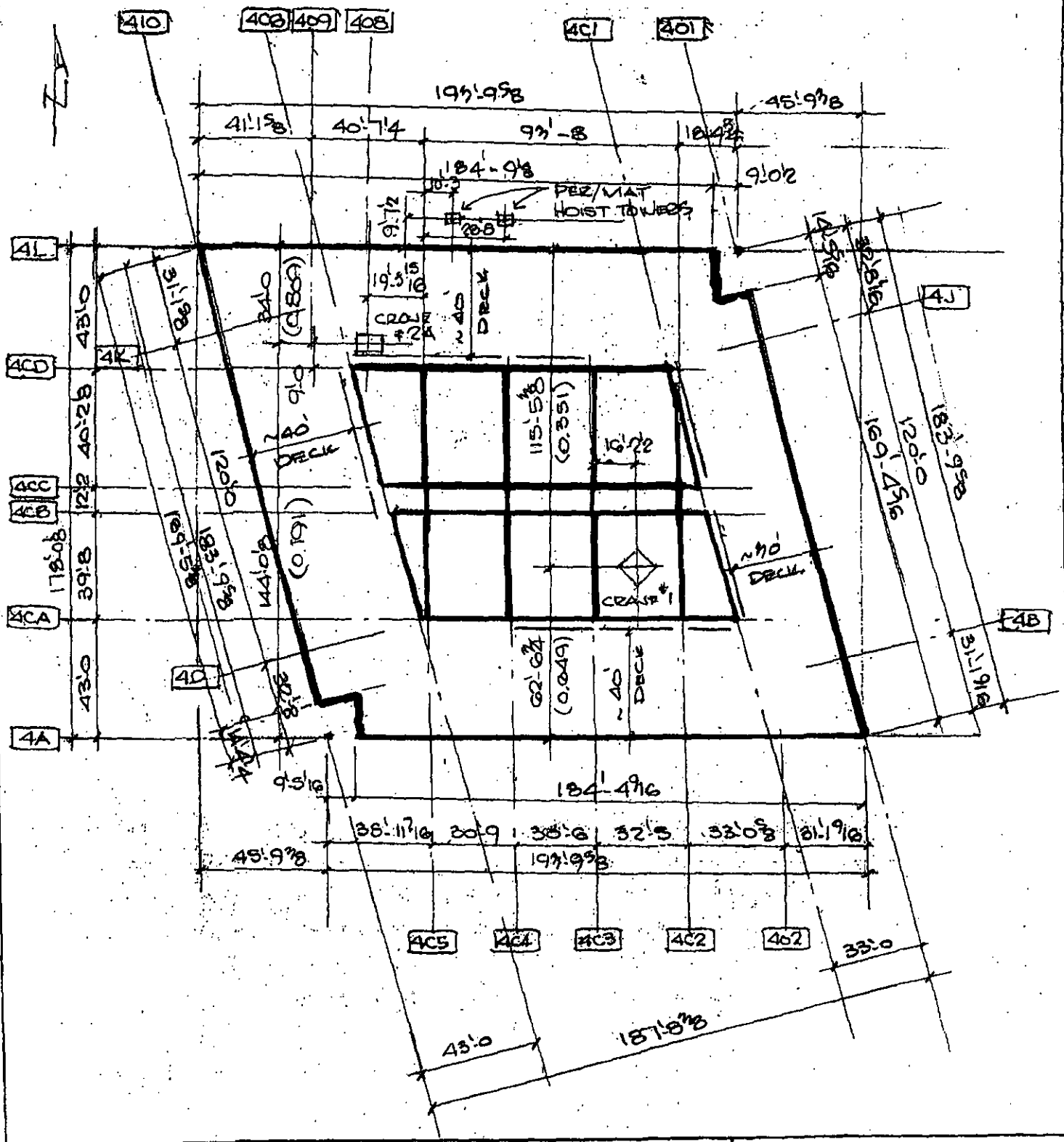

PROJECT	CLIENT	BY JJ DATE 09-28-11
		CK DATE
		RV DATE
		PROJECT NO. 8794
		PART 19 SHEET 14 OF

KAJ ENGINEERS INC. CONSULTING ENGINEERS TORONTO, CANADA

VBF @ LINE 4L TO LEVEL 48

EAST/WEST WIND FORCES TO VERT. FRAME 4L/404-409 W/ INSTALLATION OF CRANE 2A.

STORM CASE

- SEE SHT 19-2 FOR CONSTRUCTION STATUS AND GENERAL ARRANGEMENT SUMMARY
- FOR ANALYSIS OF LINE 4L FRAME, ASSUME LINES 4A AND 4L VERT. FRAMES RESIST ALL EAST/WEST TRIBUTARY WIND FORCES (CONSERVATIVE AS VERT FRAMES ON 401 AND 410 ARE ANGULATED AT 75.6° TO EAST/WEST AXIS AND THEREFORE HAVE SOME EAST/WEST WIND RESISTANCE).

1.) EAST/WEST WIND FORCES ON BLDG FRAME AND COCOON

FROM DCM REPORT B, SHT T4-23-48-C21, SEP 2010 "SUMMARY OF WIND FORCES ON FLOORS 39 TO 48" (SHT 19-APP1)

TOTAL WIND SHEAR AT LEVEL 40 WITH ERECTION TO LEVEL 48 IS GIVEN AS 715.7^k EXCLUDING CRANES AND HOISTS)

THEN FOR 50% DISTRIBUTION TO EACH OF LINES 4A AND 4L, TOTAL SHEAR AT 4L = $\frac{715.7}{2} \approx 358^k$

2) PERSONNEL & MATERIAL HOISTS (SHTS 19-APP2 & APP3)

REF REGIONAL SCAFFOLDING & HOISTING CO., INC. DWGS EQ-308.00 TO EQ-313.00

- 2 TOWER 4 HOIST COMPLEX.
  - TOWER TIES @ 48, 47, 45, 43 & 41 FOR BOTH TOWERS
  - NW TOWER TERMINATES @ 48
  - NE TOWER CONTINUES TO 64

PROJECT		BY JJ DATE 09-28-11
		CK ____ DATE ____
		RV ____ DATE ____
KAJ ENGINEERS INC.	CONSULTING ENGINEERS TORONTO, CANADA	PROJECT NO. 8794
		PART 19 SHEET 15 OF ____

VBF @ LINE 4L TO LEVEL 48

BOLT A BOLT B

MAX SHEAR TOTALS = 2.9^k + 0.9^k = 3.8^k @ EACH TOWER TIE.

THEN TOTAL FOR 2 TOWERS = 7.6^k PER TIE LEVEL.

TIES ALONG 4L ∴ TOTAL SHEAR APPLIED @ 4L TOTAL 5 LEVELS = 7.6 × 5 = 38.0 k

CRANES

- CRANE #1. UPPER BSKT NEAR 48
LOWER BSKT NEAR 47

THEN FROM SHT 6-16 U. BSKT H_{xz} = 13.1 k
L. BSKT H_{xz} = 78.6 k

DISTRIBUTION TO LINE 4L (0.351 TOTAL) @48 U. BSKT 0.351 × 13.1 = 4.6 k
@47 L. BSKT 0.351 × 78.6 = 27.6 k
32.2 k

CRANE #2A

ERECTED W/ 4 TOWERS THEN FROM 16-23, ADJUST TOTAL WIND SHEAR FOR 8 TOWERS TO 4

THEN H_W = 73.6^k − 4 × 13.625' × 0.293 KLF
= 73.6 − 16.0
= 57.6^k W/ 4 TOWERS

TO LINE 4L H ≈ 0.809 × 57.6 ≈ 46.6 k

BASEFRAME FROM 18-15 TOTAL AC_f FOR EAST/WEST WIND = 817 F^2.

FROM 18-12 $G q_z K_z$ = 23 psf

THEN $H_{E/W}$ = 817 × 23 × 10^{-3} ≈ 18.8^k

TO LINE 4L ~ $\left[178' - \frac{43'}{2}\right]\frac{1}{178} \times 18.8$ = 16.5^k

TOTALS @ 48 = 46.6 + 16.5 = 63.1^k

PROJECT	CLIENT	BY JJ DATE 09-28-11
		CK ____ DATE ____
		RV ____ DATE ____
KAJ ENGINEERS INC.	CONSULTING ENGINEERS TORONTO, CANADA	PROJECT NO. 8794
		PART 19 SHEET 16 OF ____

VREF @ LINE 4L TO LEVEL 48

DESIGN STORM WIND FORCES @ LINE 4L

HOR FORCES (KIPS)

LEVEL	BLDG	HOISTS	CRANE #1	CRANE #2	TOTAL
48	36.6	7.6	4.6	63.1	111.9
47	57.7	7.6	27.6		92.9
46	41.2				41.2
45	37.6	7.6			45.2
44	37.4				37.4
43	39.5	7.6			47.1
42	36.1				36.1
41	36.1	7.6			43.7
40	35.7				35.7
	357.9	38.0	32.2	63.1	491.2

PROJECT

CLIENT

BY JJ DATE 09-28-11

CK DATE

RV DATE

PROJECT NO. 8794

PART 19 SHEET 17 OF

KAJ ENGINEERS INC.

CONSULTING ENGINEERS
TORONTO, CANADA

94_ FRAME 4L_404-409

VBF @ LINE 4F
MODEL & HOR. FORCES

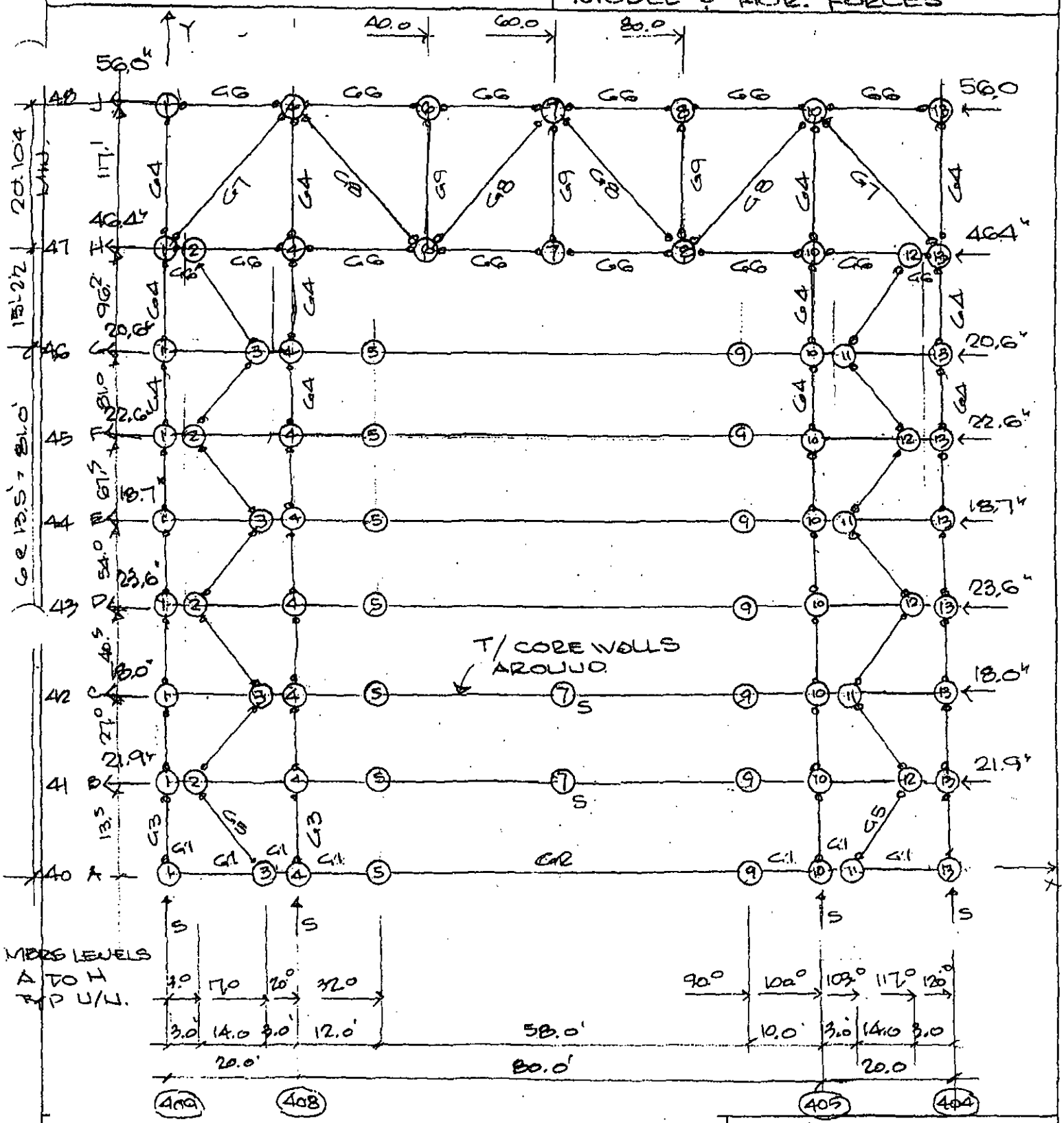

SUPPORTS

A1, A4, A10, A13 X & Y TRANSLOTION

B7, C7 X TRANS. K=5000 K/IN.

ASSUMED SLAB DIAPHRAGM-TO-CORE WALL CONNECTION STIFFNESS

BY	JJ	DATE	09-28-11
CK		DATE	
RV		DATE	
PROJECT NO.	8794		
PART	19	SHEET	18 OF

94_FRAME 4L_404-409	MBR GROUPS.

GROUP	SIZE	PROPERTIES				REMARKS
		A in^2	I_x in^4	I_y in^4	J in^4	
G1	W36×135 + PL12×1 T & B @ 217#/1	63.4	15800			SPANDREL GIRDER
G2	W36×135 + PL12×1 B @ 176#/1	51.7	10900			SPANDREL GIRDER
G3	W14×211	62.0		1030		COL
G4	W14×287	83.3		1440		COL.
G5	2TT8×8×1	30.0	178			TEMP. VERT. BRG.
G6	W14×257 + WT20×91.5	102.3		12300		LEVEL 47 & 48 TRUSS CHORDS
G7	W14×426	125		2360		TRUSS DGL
G8	W14×176	51.8		838		TRUSS DGL
G9	W14×109	32.0		447		TRUSS VERT.

PROJECT

CLIENT

BY JJ DATE 09-28-11

CK DATE

RV DATE

PROJECT NO. 8794

PART 19 SHEET 19 OF

KAJ ENGINEERS INC. CONSULTING ENGINEERS TORONTO, CANADA

94_ FRAME 4L_404-409	OUTPUT SUMMARY

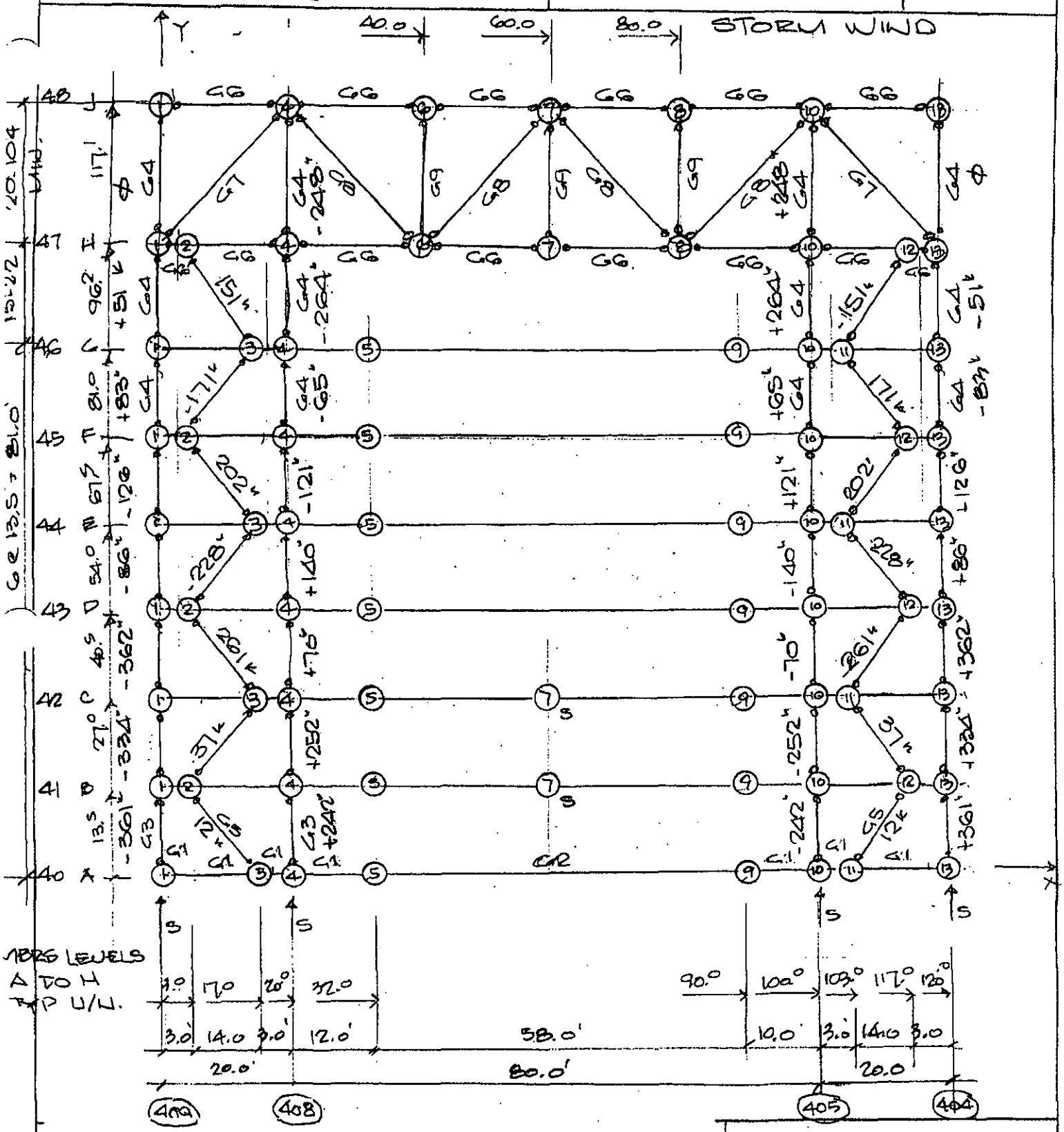

SUPPORTS

A1, A4, A10, A13 X & Y TRANSLOTION

B7, C7 X TRANS. K=5000 K/IN.

BY	JJ	DATE	09-28-11
CK		DATE	
RV		DATE	
PROJECT NO.	8794		
PART	19	SHEET	20 OF

TEMPORARY VERT. BRACING 2TT8×8×1

FROM DCM REPORT B – BRACE DESIGN FORCE = 329^k

MAX BRACE FORCE FROM 19-20 = 261^k < 329^k OK.

COLUMNS 4L/408 & 4L/409

IN-SERVICE WIND:

IN-SERVICE DESIGN WIND FOR 30 MPH WIND INCLUDING GUSTS = 0.00256×30^2 = 2.3 PSF

FROM DCM REPORT B, MAX STORM WIND q_z = 25.8 PSF @ LEVEL 41 & 26.7 PSF @ LEVEL 48 & G_f = 0.85. THEN MINIMUM DESIGN PRESSURE OCCURS @ LEVEL 41 WHERE $q_z G_f$ = 25.8×0.85 = 21.9 PSF

THEN IN-SERVICE WIND FORCES ≃ $\frac{2.3}{21.9}$ = 0.105 × STORM WIND FORCES.

COL. STRONG AXIS COUN. MOMENTS

℄ SPANDREL GIRDER 6'2 FROM INSIDE FACE OF COL

∴ ≃ 14'2 FROM ℄ OF W14×211 COL.

LOAD COMBINATIONS

$D + L + CR_{OPG} + CN + W_{IS.}$

$D + CR_{ST.} + 0.75CN + W_{ST.}$

$D + 0.75L + 0.75CR_{ST.} + 0.75CN + 0.75W_{ST.}$

0.75 COCOON MAX. VERTICAL REACTIONS AT SUPPORTS ASSUMED TO BE DEAD LOAD.

WHERE:

D = DEAD

L = LIVE

CR_{OPG} = CRANE OPERATING

CR_{ST} = CRANE STORM

CN = COCOON

$W_{IS.}$ = BLDG IN-SERVICE WIND

W_{ST} = BLDG STORM WIND

PROJECT	CLIENT	BY JJ DATE 09-28-11
		CK ____ DATE ____
		RV ____ DATE ____
KAJ ENGINEERS INC.	CONSULTING ENGINEERS TORONTO, CANADA	PROJECT NO. 8194
		PART 19 SHEET 21 OF ____

COL 4L/408 & 409 CHKS.

COL. CONSTRUCTION LOADING AT 41ST. FLOOR

		LOAD (KIPS)			
		4L/409		4L/408	
		GIRDER REACTION	TOTAL COL	GIRDER REACTION	TOTAL COL
CRANE OFF	DEAD	82	546	78	477
	LIVE	22	176	22	178
	CRANE IN-SERVICE		150		194
	COCOON		58		58
	IN-SERVICE WIND (0.105 STORM CASE)	3	38	(1)	25
	TOTAL	107	968	97	932
CRANE STORM	DEAD	82	546	76	477
	LIVE	ϕ	ϕ	ϕ	ϕ
	CRANE STORM		166		228
	0.75 COCOON		44		44
	STORM WIND	27	361	(10)	242
	TOTAL	109	1117	66	991
D+(0.75 L+C_ST)	DEAD	82	546	76	477
	0.75 LIVE	17	132	17	134
	0.75 CRANE STORM		125		171
	0.75 COCOON		44		44
	0.75 STORM WIND	20	271	(7)	182
	TOTAL	119	1118	86	1008

GOVERNS.

CHECK W14×211 GR 65 COL.

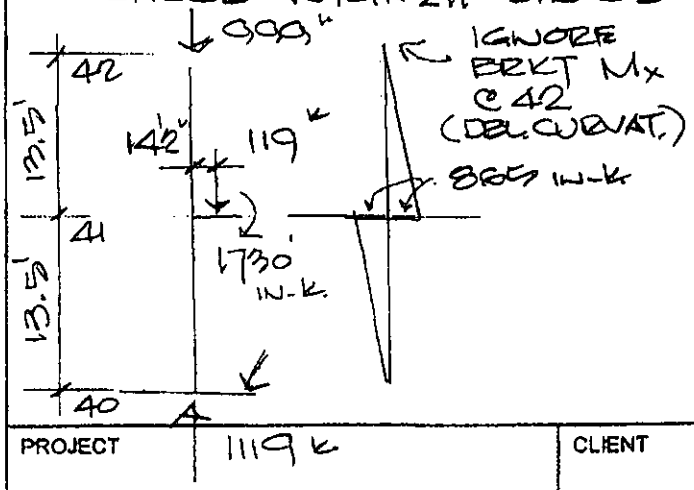

$A = 62.0 \text{ in}^2$

$\frac{b_f}{t_f} = 5.06$ $\frac{h}{t_w} = 11.6$

$I_x = 2660 \text{ in}^4$ $I_y = 1030 \text{ in}^4$

$S_x = 338 \text{ in}^3$ $S_y = 130 \text{ in}^3$

$r_x = 6.55 \text{ in}$ $r_y = 4.07 \text{ in}$

$Z_x = 390 \text{ in}^3$ $Z_y = 198 \text{ in}^3$

$r_{ts} = 4.64 \text{ in}$ $h_o = 14.2 \text{ in}$

$J = 44.8 \text{ in}^4$ $c = 1.0$

PROJECT

CLIENT

BY JJ DATE 09-28-11

CK DATE

RV DATE

PROJECT NO. 8794

PART 19 SHEET 22 OF

KAJ ENGINEERS INC. CONSULTING ENGINEERS TORONTO, CANADA

COL 4L/408 & 409 CHKS

$P_v = 1119$ K $\quad M_{xv} = 865$ in-k

$KL_x = KL_x = L_b = 13.5$ FT $= 162$ IN.

FLG $\frac{b_f}{t_f} = 5.06 < \lambda_p = 0.38\sqrt{\frac{E}{F_Y}} = 0.38\sqrt{\frac{29000}{65}} = 8.03$

∴ COMPACT FLG

WEB $\frac{h}{t_w} = 11.6 < \lambda_r = 1.49\sqrt{\frac{E}{F_Y}} = 1.49\sqrt{\frac{29000}{65}} = 31.5$

NONCOMPACT WEB.

FOR M_{xc}

$L_p = 1.76\, r_Y \sqrt{\frac{E}{F_Y}}$

$= 1.76 \times 4.07 \sqrt{\frac{29000}{65}}$

$= 151$ IN. $< L_b = 162$ IN.

$L_r = 1.95\, r_{ts} \frac{E}{0.7F_Y} \sqrt{\frac{Jc}{S_x h_o}} \times$

$\sqrt{1 + \sqrt{1 + 6.76\left(\frac{0.7F_Y}{E}\frac{S_x h_o}{Jc}\right)^2}}$

$= 1.95 \times 4.64 \times \frac{29000}{0.7 \times 65}\sqrt{\frac{44.6 \times 1.0}{338 \times 14.2}} \times$

$\sqrt{1 + \sqrt{1 + 6.76\left(\frac{0.7 \times 65}{29000} \times \frac{338 \times 14.2}{44.6 \times 1.0}\right)^2}}$

$= 804$ IN. $> L_b$

FOR P_c

$\frac{KL_Y}{r_Y} = \frac{162}{4.07} = 39.8$

$F_e = \frac{\pi^2 E}{\left(\frac{KL}{r}\right)^2} = \frac{\pi^2 \times 29000}{39.8^2}$

$= 181$ ksi

$> 0.44 F_Y = 0.44 \times 65$

$= 28.6$ ksi

∴ $F_{cr} = \left[0.658^{\frac{F_Y}{F_e}}\right] F_Y$

$= \left[0.658^{\frac{65}{181}}\right] 65$

$= 55.9$ ksi

∴ $P_c = \frac{F_{cr}}{\Omega} A$

$= \frac{55.9}{1.67} \times 62.0 = 2080$ K

PROJECT	CLIENT	BY JJ DATE 09-28-11
		CK ____ DATE ____
		RV ____ DATE ____
KAJ ENGINEERS INC.	CONSULTING ENGINEERS TORONTO, CANADA	PROJECT NO. 8794
		PART 19 SHEET 23 OF ____

COL 4L/408 & 409 CHKS

$$M_n = C_b\left[M_p - (M_p - 0.7 F_y S_x)\left(\frac{L_b - L_p}{L_r - L_p}\right)\right] \leq M_p$$

$$M_p = F_y Z_x = 65 \times 390 = 25300 \text{ in-k}$$

$$C_b = \frac{12.5 M_{max}}{2.5 M_{max} + 3M_A + 4M_B + 3M_C} \quad R_m \leq 3.0$$

$R_m = 1.0$ $\quad M_A = 0.75 M_{max}$

$M_B = 0.5 M_{max}$

$M_C = 0.25 M_{max}$ $\quad$ SAY $M_{max} = 1.0$

$$= \frac{12.5}{2.5 + 3 \times 0.75 + 4 \times 0.5 \times 3 \times 0.25} = 1.67$$

$$\therefore M_n = 1.67\left[25300 - (25300 - 0.7 \times 65 \times 338)\left(\frac{162 - 151}{804 - 151}\right)\right]$$

$$= 42000 \text{ in-k} > M_p$$

$$\therefore M_{x_c} = \frac{M_p}{\Omega} = \frac{25300}{1.67} = 15200 \text{ in-k}$$

$$B_1 = \frac{C_m}{1 - \frac{\alpha P_u}{P_{el}}}, \quad C_m = 0.6 - 0.4\frac{M_1}{M_2}$$

WHERE $M_1 = 0$ & SGL CURVATURE

THEN $C_m = 0.6$

$$P_{el_x} = \frac{\pi^2 E I_x}{(KL_x)^2} = \frac{\pi^2 \times 29000 \times 2660}{162^2} = 29000 \text{ K}$$

$$\therefore B_1 = \frac{0.6}{1 - \frac{1.6 \times 1119}{29000}}$$

$\alpha = 1.6$ FOR ASD

$$= 0.640$$

PROJECT	CLIENT	BY JJ DATE 09-28-11
		CK ____ DATE ____
		RV ____ DATE ____
KAJ ENGINEERS INC.	CONSULTING ENGINEERS TORONTO, CANADA	PROJECT NO. 8794
		PART 19 SHEET 24 OF ____

$$\frac{P_r}{P_c} = \frac{1119}{2080} = 0.538$$

$$\therefore \frac{P_r}{P_c} + \frac{8}{9}\left(\frac{B_{1x} M_{rx}}{M_{cx}}\right) \leq 1.0$$

$$= \frac{1119}{2080} + \frac{8}{9}\left(\frac{0.640 \times 865}{15200}\right)$$

$$= 0.538 + 0.032$$

$$= 0.570 < 1.0$$

$\therefore$ $\boxed{\text{W14x211 GR 65 ADEQUATE}}$

PROJECT	CLIENT	BY JJ DATE 09-28-11
		CK ____ DATE ____
		RV ____ DATE ____
KAJ ENGINEERS INC.	CONSULTING ENGINEERS TORONTO, CANADA	PROJECT NO. 8794
		PART 19 SHEET 25 OF ____

COL 4CD/4C6.

FLR D 17.4^k FL. D 2
FLR L 20.0^k FL L 3

1024'-6¾

48

DECK

ΣD 19.4^k
ΣL 23^k

W12x230

20'-10¼

FLR D 18.6^k
COL D 5.3^k
FLR L 19.4

1003'-8½

DECK

47

ΣD 43.3
ΣL 42.4

W12x230

14'-4

FLR D 12.5
COL D 3.6
FLR L 20.1

989'-4½

DECK

46

ΣD 59.4
ΣL 62.5

W12x210

13'-6

FLR D 12.5
COL D 3.4
FLR L 20.1

975'-10½

DECK

45

ΣD 75.3
ΣL 82.6

W12x120

13'-6

FLR D 12.5
SLAB 50.3
COL D 1.8
FLR L 20.1

962'-4½

SLAB

44

ΣD 139.9
ΣL 102.7

13'-6

FLR D 12.5
SLAB 50.3
COL D 1.8
FLR L 20.1

948'-10½

SLAB

43

ΣD 204.5
ΣL 122.8

13'-6

936'-4½

T/ CORE WALL

42

13'-6

921'-10½

41

T/ST. TYP

CORE PLATFORM - #1

REF SHTS 14-7 TO 12.

TRIB WT ≈ 0.04 x 42^k
≈ 2^k

TRIB LIVE (5 LEVELS @ 15 PSF)

= 0.04 x 749 □ x 5 x 15 #/□ / 1000

≈ 2.25^k SAY 3^k

(ASSUME APPLIED @ 48)

CRANE	FORCES	
OP'G	537^k	DOWN
	82^k	UP
STORM	594^k	DOWN
	183^k	UP

LEVEL 44 ± BELOW
2½" NWC OVER 3" DK
CONC WT = 50 PSF.

GOV.

FOR COL LIFT 42 TO 43

$\Sigma D + L + CR_{OPC} = 205 + 123 + 537 = 865^k$

$\Sigma D + CR_{ST} = 205 + 594 = 799^k$

$\Sigma D + 0.75(L + CR_{ST}) = 205 + 0.75(122 + 594)$
$= 743^k$

W12x120 COL ON $L_{UY} = 13'6$

$P_c \approx 868^k > P_v = 865^k$

W12x120
ADEQUATE

BY	JJ	DATE	09-28-11
CK		DATE	
RV		DATE	
PROJECT NO.	8794		
PART	19	SHEET	26 OF

DCM ERECTORS INC.
• 77 Belfield Road, Suite 100, Toronto ON M9W 1G6
Ph. (416) 241-6987 Fax (416) 241-3239
• 110 East 42nd Street, Suite 1710, New York, NY 10017
Ph. (212) 599-1603 Fax (212) 599-1615

PROJECT: WTC-T4
DATE: SEPT, 2010
SCS : T4-23-48-C21

WIND FROM WEST

SUMMARY OF WIND FORCES ON FLOORS 39 TO 48

WIND LOADS ON STEEL FRAME ARE APPLIED TO COMPUTER MODEL AS UNIFORMLY DISTRIBUTED LOADS TO WINDWARD AND LEEWARD SPANDREL BEAMS

FLOOR	WIND FORCE PER FLOOR (KIPS) *	UDL ON WINDWARD & LEEWARD SPANDREL (KIPS/FT)	WIND FORCE ON CRANES CRANE #1 (KIPS)	CRANE #2 (KIPS)
48	73.2	0.197		
47	115.4	0.311	12.6	12.5
46	82.4	0.221		
45	75.1	0.202	76.4	76.0 TO 93.0
44	74.8 ~~16.2~~	0.202		
43	79.1	0.213		
42	72.1	0.194		
41	72.2	0.194		
40	71.4	0.192		
	Σ = 715.7			

* THESE FORCES ARE ESTABLISHED BY APPLYING A FACTOR OF 0.970 TO THE NORTH WIND FORCES ON PAGE T4-23-48-C19, SINCE THE WEST WIND FORCES WERE FOUND TO BE ALMOST IDENTICAL TO NORTH WIND FORCES. (SEE REPORT ON FLOORS 7 TO 23, PAGE T4-3-23-C3ER1)

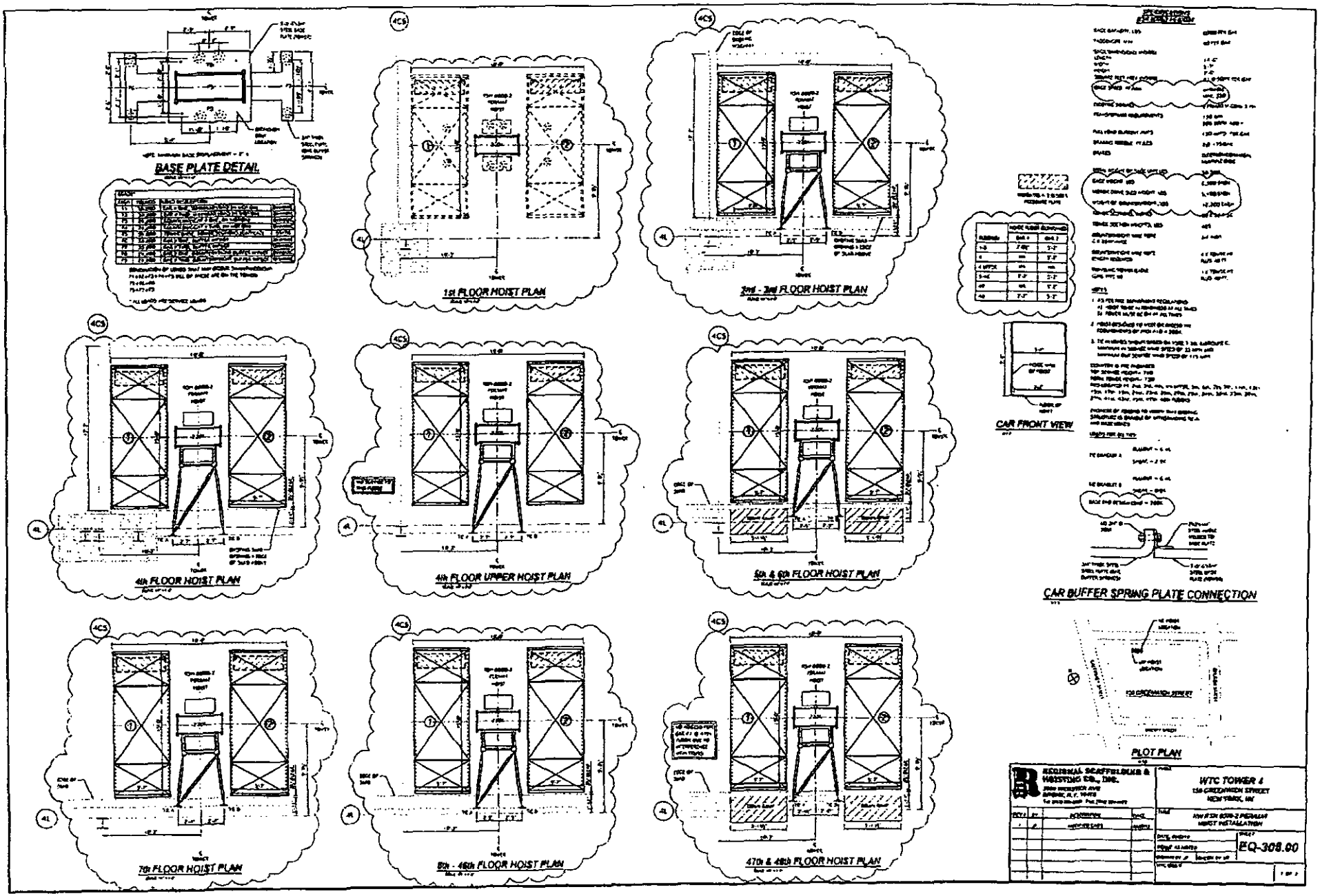
BASE PLATE DETAIL
1st FLOOR HOIST PLAN
2nd - 3rd FLOOR HOIST PLAN
4th FLOOR HOIST PLAN
4th FLOOR UPPER HOIST PLAN
5th & 6th FLOOR HOIST PLAN
7th FLOOR HOIST PLAN
8th - 46th FLOOR HOIST PLAN
47th & 48th FLOOR HOIST PLAN
CAR FRONT VIEW
CAR BUFFER SPRING PLATE CONNECTION
PLOT PLAN
REGIONAL SCAFFOLDING & HOISTING CO., INC.
WTC TOWER 4
EQ-308.00

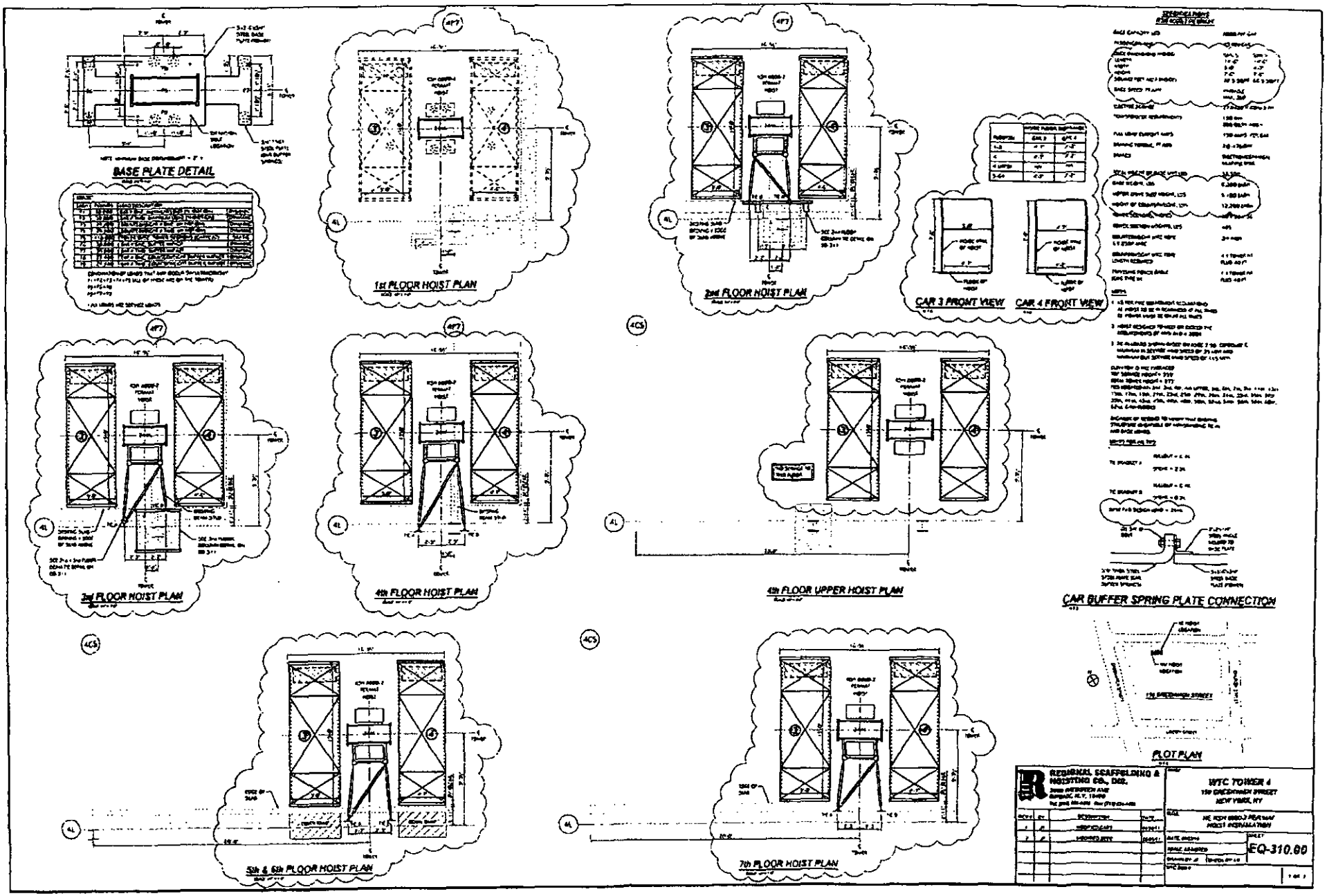
BASE PLATE DETAIL
1st FLOOR HOIST PLAN
2nd FLOOR HOIST PLAN
CAR 3 FRONT VIEW
CAR 4 FRONT VIEW
3rd FLOOR HOIST PLAN
4th FLOOR HOIST PLAN
4th FLOOR UPPER HOIST PLAN
CAR BUFFER SPRING PLATE CONNECTION
5th & 6th FLOOR HOIST PLAN
7th FLOOR HOIST PLAN
PLOT PLAN
REGIONAL SCAFFOLDING & HOISTING CO., INC.
WTC TOWER 4
150 GREENWICH STREET
NEW YORK, NY
EQ-310.00

WORLD TRADE CENTER - TOWER FOUR
TOWER CRANE INSTALLATIONS
GENERAL NOTES

1. STRUCTURAL REQUIREMENTS FOR SUPPORT OF THE CONSTRUCTION CRANES ON THE ERECTED STRUCTURE ARE NOTED HEREIN.

2. REFER TO PROJECT STRUCTURAL DRAWINGS FOR PERMANENT BUILDING STRUCTURAL ELEMENTS NOT SPECIFIED HEREIN.

3. INSTALLED CRANE EQUIPMENT

CRANE #1

MAKE & MODEL	FAVELLE FAVCO M760D SERIES II TOWER CRANE ON FMC TG1900 MAST SECTIONS ON FEDERATED EQUIPMENT UPPER AND LOWER CRANE BASKETS
TOWER HEIGHT	MAX 119'-9" (9'-1" LOWER BASKET, 8 @ 13'-7½" TG1900 MAST SECTIONS, 1'-8 MAST TRANSITION SECTION)
MAIN BOOM	180 FT + FLY

CRANE #2

MAKE & MODEL	FAVELLE FAVCO M760D SERIES II TOWER CRANE ON FMC TG1900 MAST SECTIONS ON FEDERATED EQUIPMENT UPPER AND LOWER CRANE BASKETS
TOWER HEIGHT	MAX 119'-9" (9'-1" LOWER BASKET, 8 @ 13'-7½" TG1900 MAST SECTIONS, 1'-8 MAST TRANSITION SECTION)
MAIN BOOM	165 FT + FLY IN PHASE 2 (UPPER BASKET SUPPORT UP TO 5TH FLOOR) 135 FT + FLY IN PHASE 3 (UPPER BASKET SUPPORT ABOVE 5TH FLOOR)

CRANE #2A

4

MAKE & MODEL	FMC TG1900 TOWER CRANE
TOWER HEIGHT	VARIES (SEE DCM DRAWING CR-2A R7)
MAIN BOOM	160 FT + FLY

4. MAXIMUM CRANE LIFTED LOADS ARE NOT TO EXCEED THE PUBLISHED CRANE SAFE WORKING LOAD CHART CAPACITY WITH THE SPECIFIED BOOM LENGTH AND OPERATING RADIUS.

5. THE INSTALLATION IS PROPORTIONED FOR AN OUT-OF-SERVICE BASIC WIND SPEED OF 95 MPH IN EXPOSURE C TO THE REQUIREMENTS OF ASCE/SEI 7-05 "MINIMUM DESIGN LOADS FOR BUILDINGS AND OTHER STRUCTURES". DESIGN STORM VELOCITY IS BASIC WIND SPEED FACTORED BY 0.85 TO REFLECT A CONSTRUCTION PERIOD OF 1 TO 2 YEARS IN ACCORDANCE WITH ASCE/SEI 37-02 "DESIGN LOADS ON STRUCTURES DURING CONSTRUCTION".

6. WIND SPEEDS IN EXCESS OF 30 MPH MEASURED AT THE CRANE CAB LEVEL ARE BY DEFINITION STORM WINDS AND THE CRANES MUST BE TAKEN OUT-OF-SERVICE. CRANE #1 IS TO BE PERMITTED TO WEATHERVANE WITH THE BOOM AT MAXIMUM 70 DEGREES TO THE HORIZONTAL (MAIN LOAD LINE AT 66 FOOT RADIUS). CRANE #2 UPPERWORKS IS TO BE POSITIVELY SLEW LOCKED WITH MAIN BOOM LENGTH SQUARE TO NORTHWEST MAST FACE (I.E. BOOM IS POINTING PLAN NORTHWEST) AND MAIN HOOK AT MAXIMUM RADIUS (160 FOOT RADIUS [16.5 DEGREE BOOM ANGLE] WITH 165 FT BOOM IN PHASE 2 AND 130 FOOT RADIUS [18 DEGREE BOOM ANGLE] WITH 135 FT BOOM IN PHASE 3. CRANE #2A IS TO BE PERMITTED TO WEATHERVANE WITH THE BOOM AT MAXIMUM 70 DEGREES TO THE HORIZONTAL (MAIN LOAD LINE AT 60 FOOT RADIUS).

7. UNLESS OTHERWISE NOTED, ALL STEEL CRANE BRACING AND SUPPORT MATERIAL IS TO COMPLY WITH THE FOLLOWING SPECIFICATIONS:
   - TUBULAR STRUCTURAL SHAPES (HSS) - ASTM A500 GR. B (Fy = 46 KSI)
   - STRUCTURAL SHAPES AND PLATES UNLESS NOTED - ASTM A572 GR. 50
   - STRUCTURAL SHAPES AND PLATES NOTED - ASTM A36
   - STRUCTURAL BOLTS - ASTM A325 OR A490
   - WELDING ELECTRODES - E70XX BASIC ELECTRODES OR CONTROLLED HYDROGEN PROCESS.

8. CRANE INDUCED FORCES SPECIFIED HEREIN ARE SERVICE (UNFACTORED) LOADS. USE LOAD FACTOR OF 1.6 FOR FACTORED LOADS USING STRENGTH DESIGN.

CRANE 2A

CRANE EQUIPMENT

- UPPERWORKS: FMC TG1900 WITH 160 FT BOOM + 10 FT TIP EXTENSION.
- TOWER TG1900 9'-9 °/o SQ
  SQ. LEG CTRS x 13'-7½ LONG EACH (TS)
  WEIGHT = 12.5 K EACH (MODIFIED FOR BSKT CLIMBING)
- TOP CLIMBING FRAME (TCC) W/O MONORAIL BEAM
  WEIGHT = 65 K (2 K ADDED FOR MODIFICATIONS)
- MAX 2 BLDG TIE-IN ASSEMBLIES
  DCM DWG 32 r1 FROM 201-X910
  " " LP-16 r5 FROM 843
  TOWER TRIBUTORY WEIGHT ≈ 10 K EACH.

PHASES (REF DCM CR-2A r7)

1. - CRANE FREESTANDING W/ TCC AND MAX 8 TS FOR TOTAL TOWER HEIGHT OF 109'-0 IN OP'G MODE.
   - JUMP MODE 1 W/ MAX 11 TS AND TOTAL TOWER HEIGHT 149'-10½ PRIOR TO INSTALLATION OF 1ST TIE-IN AT 88'-5½ ABOVE CRANE BASE AT BOTTOM OF 1ST TS (DATUM ELEV 1037'-5).
2. - CRANE TIED-IN AT 1125'-10½ W/ MAX 14 TS & TOTAL TOWER HEIGHT OF 190'-9 IN OP'G MODE.
   - JUMP MODE 2 W/ MAX 17 TS AND TOTAL TOWER HEIGHT 231'-7½ PRIOR TO INSTALLATION OF 2ND TIE-IN AT 170'-2½ ABOVE CRANE BASE.
3. CRANE TIED-IN AT 1207'-7½ W/ MAX 19 TS & TOTAL TOWER HEIGHT OF 258'-10½ IN OP'G MODE.

PROJECT	CLIENT	
△1 CHANGE TO TG1900	CRANE 08-29-11	BY JJ DATE 06-30-11
		CK DATE
		RV △1 JJ DATE 08-29-11
KAJ ENGINEERS INC.	CONSULTING ENGINEERS TORONTO, CANADA	PROJECT NO. 8794
		PART 16 SHEET 1 OF

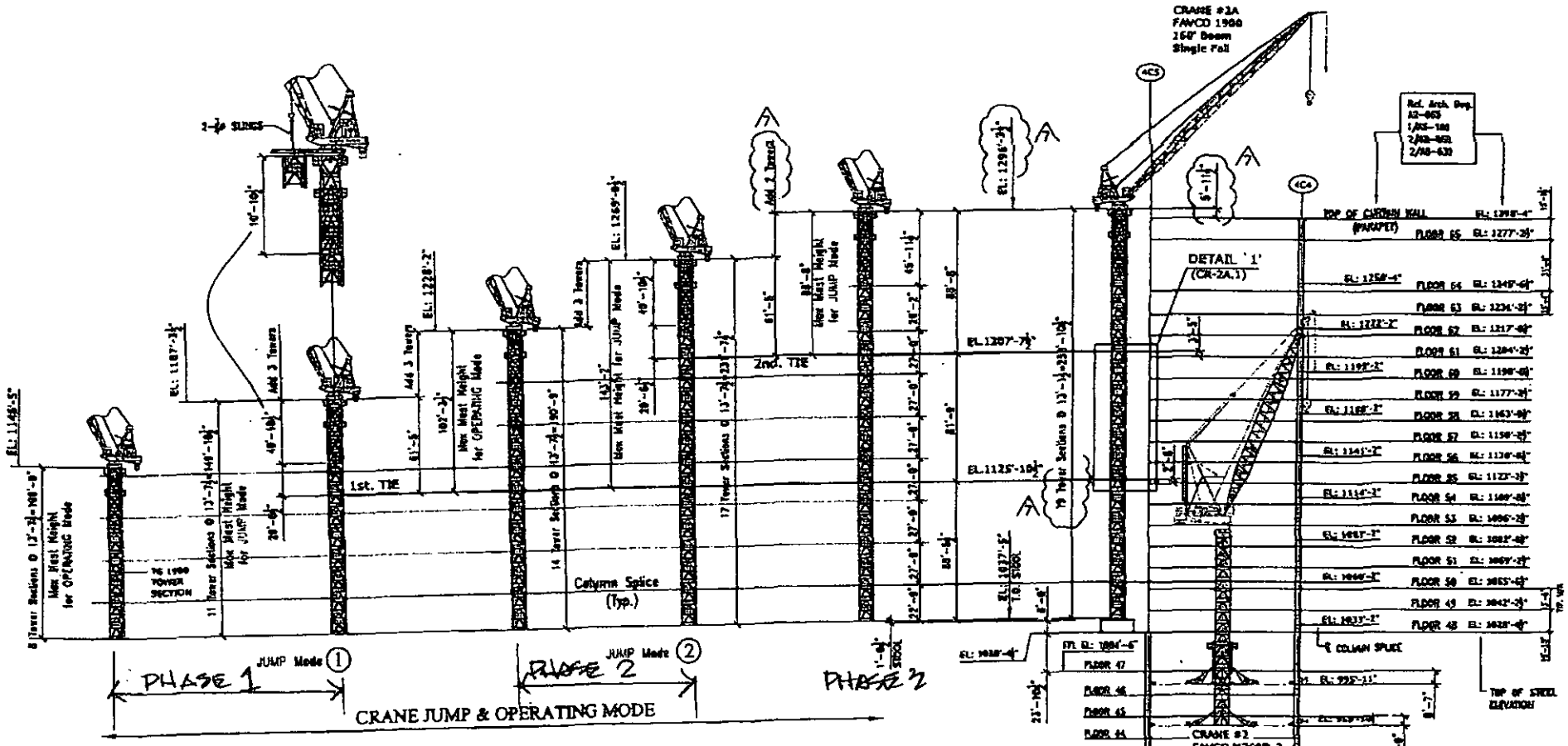

CRANE - 2A

ELEVATION LOOKING NORTH

WORK THIS DWG. WITH DWG. CR-2A.1

REV.	DATE	DESCRIPTION
4	Aug.23/2011	TOWER SECTIONS REDUCED FR 30 TO 18
3	Aug.15/2011	CRANE CHANGED TO FAWCO 1900
2	July 11/2011	CRANE TOWER SECTION REDUCED BY 90 DEG.
1	Mar. 25/2011	1-FAWCO 768 TOWER ADDED (For Cable to clear Grt. Climber)
A	Mar. 23/2011	FAWCO ORIGINAL CRANE ADDED (TO SCALE)
A	Mar. 18/2011	CRANE & TOWER TO FAWCO 768 , Bull. NO. REVB.

DCM Erectors, Inc.

DCM ERECTORS INC.

STRUCTURAL STEEL & MISCELLANEOUS METALS

77 Bathurst St., Suite 100
Toronto, Ontario
Canada M5V 2G6
Tel: (416) 241-0969
Fax: (416) 241-3439

110 East 42nd Street
Suite 1710
New York, N.Y. 10017
Tel: (212) 599-1440
Fax: (212) 599-1443

PROJECT: WORLD TRADE CENTER TOWER 4
SITE: 150 Greenwich Street, New York, N.Y.
BY: TISHMAN CONSTRUCTION CORP.
TITLE: CRANE #3A ABOVE 48th FLOOR WITH 768 TOWER SECTION+CLIMBER
DRAWING NO.: 843
DATE: Sun Aug.28/2011
SCALE:
DRAWN BY:
CHECKED BY:
DRAWING NO.: CR-2A
REV.: A

8794

PART 16 SHT 2 of 1

① DELETE PREVIOUS 10-3V0 08-29-11

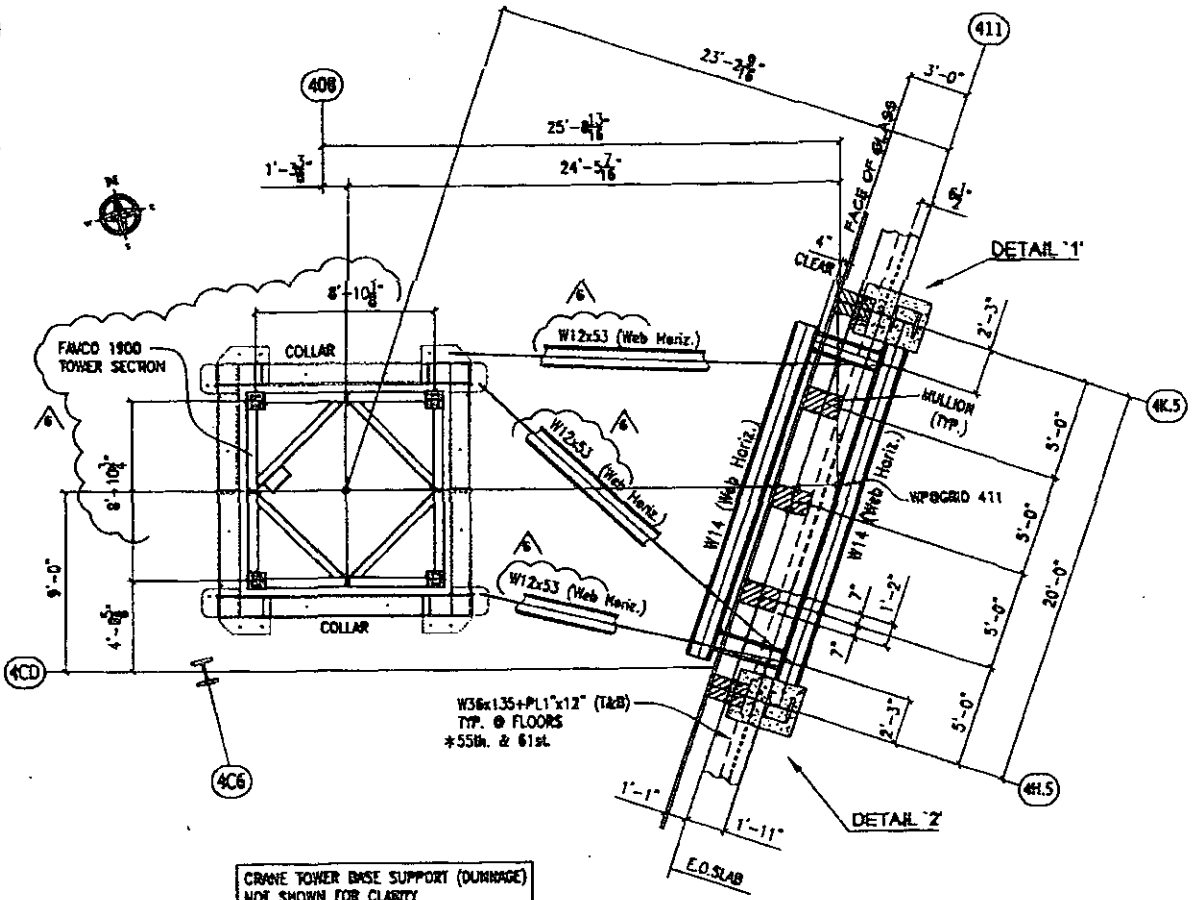

CRANE TOWER BASE SUPPORT (DUNNAGE) NOT SHOWN FOR CLARITY (REF. DWG. LP-15)

CRANE #2A TOWER COLLAR & TIE

*[● 55th. FLOOR (T.O.STL. EL: 1123'-2½)
○ 61st. FLOOR (T.O.STL. EL: 1204'-2½)] REF. DWG. LE-0

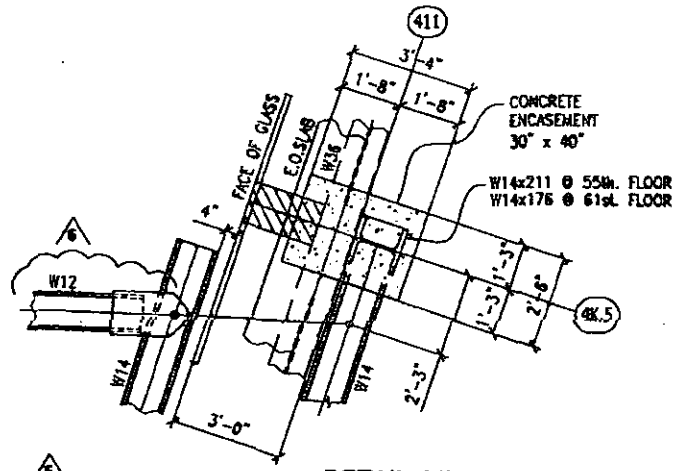

DETAIL '1'

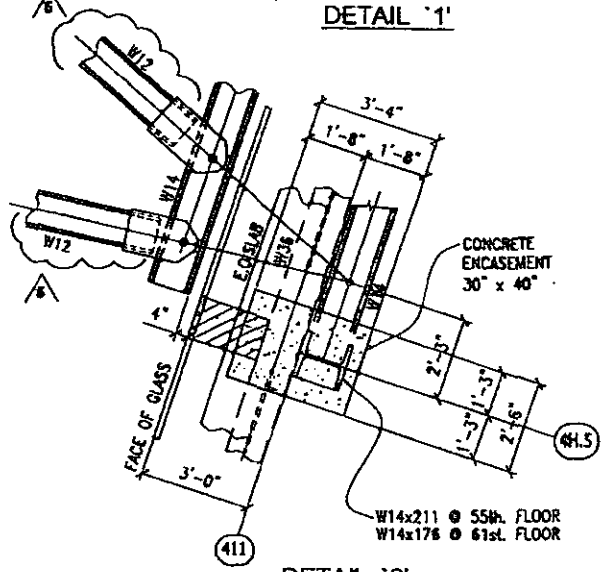

DETAIL '2'

WORK THIS DWG. WITH DWG. LP-15 & LP-0

REV.	DATE	DESCRIPTION
4	Aug. 29/2011	CRANE CHANGED TO FAVCO 1900 (REMOVE COLLAR & TIES)
3	July 11/2011	CRANE TOWER REPAIRED BY 90 DEG. & TOWER LOCATION REVISED
2	Mar. 28/2011	CLEARANCE BETWEEN GLASS & W14 REVISED PER TISHMAN COMMENT
1	Mar. 19/2011	CRANE #2A CHANGED TO FAVCO HYBRID WITH 360 TOWER SECTIONS
0	Nov. 29/2010	CRANE # (MANNION) WRAPPED
1	Aug. 24/2010	W14 BEAM ADDED AS PER ENGINEER'S COMMENT

DCM Erectors, Inc.

DCM ERECTORS INC.

STRUCTURAL STEEL & MISCELLANEOUS METALS

77 Belfield Rd., Suite 100, Etobicoke, Ontario, Canada M9W 1E8, Tel: (416) 241-8967, Fax: (416) 241-3330

110 East 42nd Street, Suite 1204, New York, N.Y. 10017, Tel: (212) 500-1600, Fax: (212) 599-1645

PROJECT:	WORLD TRADE CENTER - TOWER 4
SITE:	150 GREENWICH STREET, NEW YORK, N.Y.
OWNER:	TISHMAN CONSTRUCTION CORP.
TITLE:	FAVCO H760 ABOVE 45th. FLOOR TOWER SECTION COLLAR & TIES
CONTRACT No:	843
DRAWING No:	LP-16
SCALE:	Sem
DATE:	Aug. 22/2010

PART	16	SHEET	13 OF
PROJECT NO.	8794	DATE	08-29-11
BY	JJ	DATE	
CK.		DATE	
BY		DATE	

DELETE PREVIOUS 16-4 VO 08-29-11

08-29-11

8794

PART 16 SHT 4 of 1

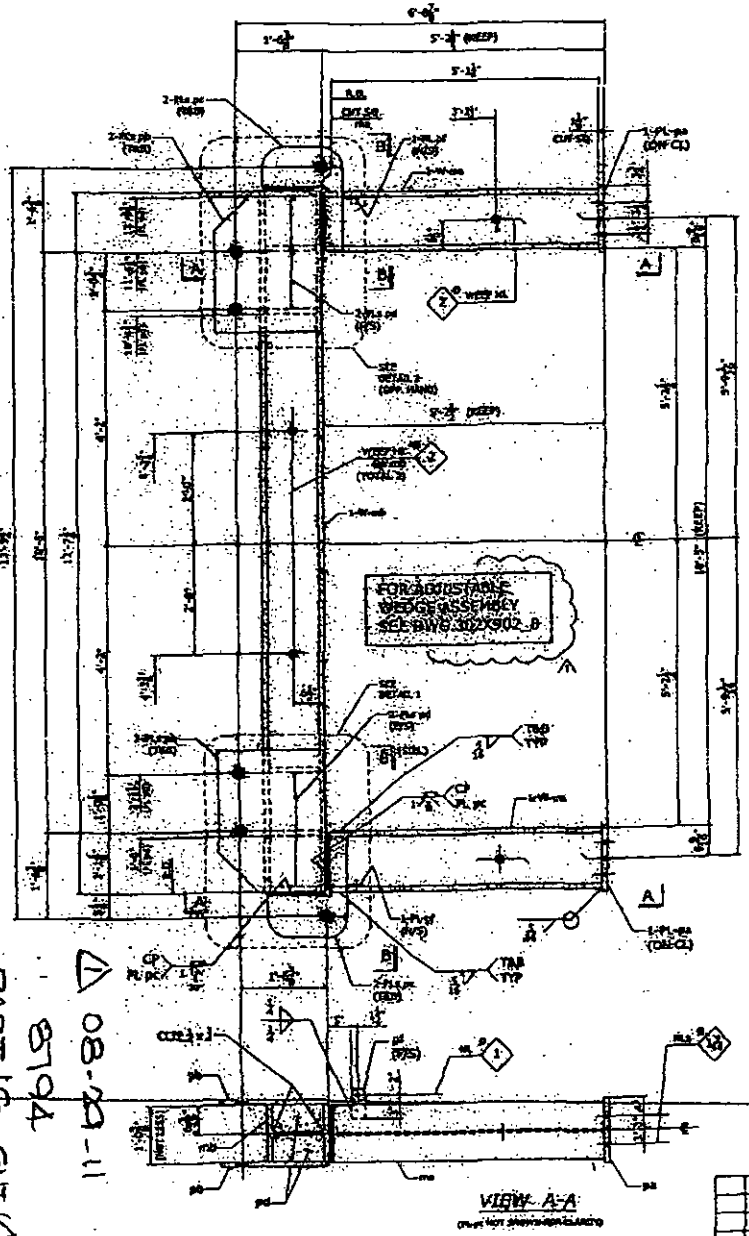

2 - COLLAR FRAME REQ'D A32

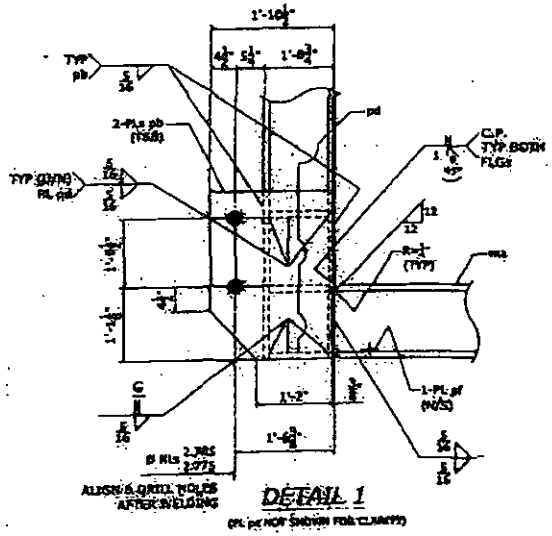

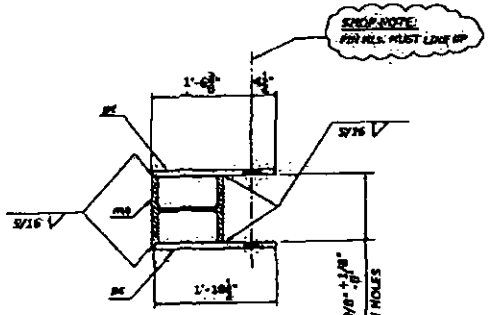

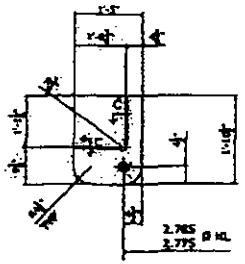

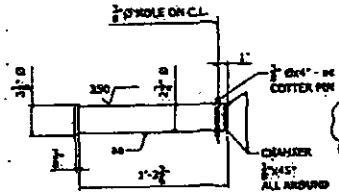

4 - PIN REQ'D B32

| BILL OF MATERIAL | | |

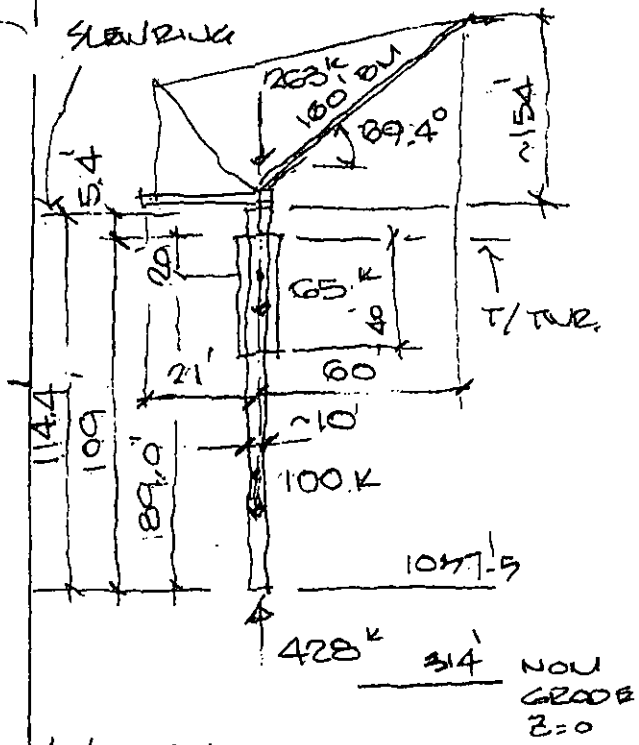

M @ TWR BASE DUE TO STRUCTURE WT ACTING HORIZONTALLY

$\simeq 258^K \times 114.4' + \frac{114.4^2 \times 0.917}{2}$

$+ 65^K \times 89' \simeq 41300$ F-K

FOR θ_B = ROTATION @ TWR BASE

$\simeq 1/212$ @ M ≈ 6000 IK

$\simeq \frac{41.3}{6 \times 212}$ RAD @ M = 41300 F-K

UPPERWORKS WIND AREAS ABOVE T/ TWR

FIXED 510 □ @ $\bar{Y} = 21.0'$

BOOM $170 \times 3 \sin^2 69.4 = 450$ □

@ $\bar{Y} = 9.75 + \frac{170}{2} \sin 69.4 = 89'$

$\Sigma A = 1020$ □ $\Sigma A\bar{Y} = 52000$ FT^3

$\bar{Y} = 51.0'$

GUST FACTOR FOR FREESTANDING CROWE

DETERMINE NATURAL FREQUENCY OF TOWER n_1

$$n_1 \simeq \frac{1}{2\pi}\left(\frac{g}{x}\right)^{1/2}$$

WHERE $g = 32.2$ F/SEC^2

x = TOWER DEFLECTION @ SLEWRING WHEN LOADED W/ STRUCTURE SELF WEIGHT ACTING HORIZONTALLY

$$\therefore x = \frac{h^2}{EI}\left[\frac{Qh}{3} + \frac{wh^2}{8} + \frac{P(3h-b)}{6}\right] + \theta_B \cdot h$$

WHERE h = TOWER HEIGHT TO RING ABOVE TWR BASE = 114.4 F.

w = TOWER WT PER FOOT $\simeq \frac{100^K}{109'} = 0.917$ KLF

Q = UPPERWORKS SELF WT (INCLUDES SLEW MOUNT) LESS 5.4' OF MAST $= 263^K - 5.4 \cdot 0.917 = 258^K$

P = CLIMBING CAGE WEIGHT = 65 K @ SAY C OF A

$\therefore b = 89.0'$

E = 29000 KSI

I = 293400 W^4 FOR TG1900 TWR

PROJECT | CLIENT

⚠ CHANGE TO TG1900 CROWE 08-29-11

KAJ ENGINEERS INC. CONSULTING ENGINEERS TORONTO, CANADA

BY JJ DATE 06-30-11
CK DATE
REV ⚠ JJ DATE 08-29-11
PROJECT NO. 8794
PART 16 SHEET 5 OF

Date: January 12th, 2012

AGENDA

DCM's TOWER CRANE 2A JHA/ASSEMBLE SAFETY COORDINATION MEETING

DATE OF ASSEMBLE: _____

1 > Crane Application Submittals and Approval: CD's

a...Submittals to PA.

b... DOB Notification and Confirmation

2 > EOR Review -- Load Imposed, (Calculations)

a. Drawing with pertinent information

b. EOR written crane inspection reports.

c. condition prior to assemble.

d. Staging Area

e. Assist Crane

3 > Installation: **Means and Methods, Height and Duration.**

a. Manufacturer's Assemble Manual/Means and methods

b. Pre-Inspection report.

4 > **Certification:**

a. Assemble crew

b. Tower Rigger

c. Crane operator

5 > Pre- Assemble meeting, 24 hours prior to start of assemble: Sign-in sheet.

6. AREAS OF CONCERN

6 > Rigging, inspection of rigging components, Softener,

7 > Safety of the public and Property: Exposure of the public and adj properties to Hazards.

8 > Fall protection, securing Tools and Materials. Control Access Zone.

10 > Contingency Plan.

Mechanical failure.

Bad weather condition.

11 > Approval and use after Assemble.

12> EOR sign off ..... LOAD TEST.

NYC Buildings

NY.gov always open

CLICK HERE TO SIGN UP FOR BUILDINGS NEWS

NYC Department of Buildings

Cranes & Derricks CD

CD NUMBER: 3705 RECORD NO.: 2

MANUFACTURER: LINKBELT/FMC

MODEL: TG 1900 (76) JANUARY 1979

EQUIPMENT TYPE: TOWER CRANE - INT CLIMBING MECHANISM

SERIAL No.: 76G9-1206C

Payment History

Certificate of Operation

Current Status: EXPIRED ON 01/13/2011

Filing Information

Filing Status: RENEWAL - TEMPORARILY APPROVED ON 10/06/2011

Filed: 10/03/2011

Registration Expiration Date: 01/13/2011

Invoice Number: 61043336

Fee Paid: $400.00

Applicant

Name: MICHAEL J SCHIAVONI

Title: MEMBER

Business Name: FEDERATED CRANE CO LLC

Business Address: 1640 NEW MARKET AVE S PLAINFIELD NJ 07080

Phone: 917-797-3441

Fax: 732-752-1158

Owner

Name: MICHAEL J SCHIAVONI

Title: MEMBER

Business Name: FEDERATED CRANE CO LLC

Business Address: 1640 NEW MARKET AVE S PLAINFIELD NJ 07080

Phone: 917-797-3441

Fax:

Non US Phone:

Country:

Crane / Derrick / Mast Climber Information

Tower Height: 160FT

Boom Length: 200FT

Jib Length: 70FT

Total Combined Length: 430FT

Maximum capacity: 115 TONS

Number of Drums: 3

Cable Size- 1) 1 5/8"
2) 7/8"
3) 1 1/4"
4)

Transmission Type: HYDRAULIC/PNEUMATIC

Power: DIESEL

Overall Carrier- Length:
Width:
Tailswing:

Width with Outriggers Extended:

Tower/Mast Property- Depth: 9' 9"
Width: 9' 9"
Height: 13' 7"

Counterweight Configuration- 1) 23,600 LB
2) 70,800 LB
3)
Bumper: N/A

If you have any questions please review these Frequently Asked Questions, the Glossary, or call the 311 Citizen Service Center by dialing 311 or (212) NEW YORK outside of New York City.

NYC BUILDINGS

AMENDMENT

Please Submit 2 Copies for Cranes & Derricks
Plus Copies For Your Own Use
Application Must Be Typewritten

CRANE / DERRICK / WORKPLATFORM

Date November 25 20 11

CN No _____ 20 _____ BLOCK 58 LOT 1

LOCATION 150 Greenwich Street (AKA WTC - Tower 4) Manhattan
Street Address Borough

Application is hereby made to the Commissioner for approval of the following AMENDMENT to the specifications and plans filed with the above numbered application, with the stipulation that this amendment is to become a part of the aforesaid original application and subject to all the conditions, agreements and statements herein contained.

Applicant Gregory Vidgop Signature _____

Address 110 East 42ndStreet, New York, NY 10017 Telephone (212) 599-1603

STATE OF NEW YORK GREGORY VIDGOP No. 079360 LICENSED PROFESSIONAL ENGINEER

Previously approved Favelle Favco M760D Series II (CD4193)

Amendment submitted indicates that the above crane will be used to Erect Crane 2A TG1900 (CD3705)

Logistic drawings submitted herewith.
Drawings CR2A, FLR-49-52, LP-15, LP-37, LE-25.1, LE-25.2, LE-25.3, LE-25.4, LE-25.5, LE-25.6, LE-26.1, LE-26.2 and LE-26.3

All previously submitted data to remain the the same.

Page _____ of _____

Please sign and seal the above application.

NOTE-The applicant must not use the back of this sheet. If more space is needed, additional numbered sheets must be used. No item may be continued over to another page, but each item must be completed on the sheet on which it appears. Only those items that appear above this note will be considered.

EXAMINED AND RECOMMENDED

FOR APPROVAL ON _____ 20 _____ _____
Examiner

APPROVED _____ 20 _____ _____
Director

CD-10 REV. 12/03

NYC BUILDINGS

Notification of Raising or Lowering of Climber or Tower Crane

The completed application must reach the Cranes and Derricks Division
48 hours before the raising or lowering of a Tower Crane.

Please file 2 copies
Application must be typewritten

1. Location Of Job

Borough: Manhattan

House No(s).: 150 Greenwhich Street Street Name:

Special Place Name: WTC - Tower 4

2. Crane Information

C.D. No.: 3705 C.N. No.: Phase:

✓ External Climbing Crane ☐ Internal Climbing Crane

Dates(s) of Proposed Raising or Lowering: Day of the Week:

Note: If the crane raising / lowering operation is to be performed on weekends, holidays, or other than normal working hours, an after-hour work variance must be submitted and approved by the Cranes & Derricks Division prior to commencement of work.

3. Supervisor's Statement

Last Name: Vanhees First Name: Arnold M.I.:

Business Name: DCM Erectors, Inc.

Address: 110 East 42nd Street, Suite 1704

City: New York State: NY Zip: 10017

Phone: (212) 599-1603 Fax: (212) 599-1615

I, Arnold Vanhees, am a representative of the crane manufacturer, the owner of the crane or the contractor. I have at least 3 years of experience in construction or erection of tower crane and I have been designated as the supervisor in charge of raising or lowering the above crane. I will personally check that all horizontal bracing, collars, shoring and wedges in conformance of the drawings approved by the Cranes & Derricks Division. I will also ensure the tower crane manufacturer's climbing procedure be strictly followed.

Falsification of any statement is a misdemeanor under Section 26-124 of the Administrative Code and is punishable by a fine, imprisonment, or both.

Signature **Date** Oct-13-2011

4. Owner or Contracator Information

Last Name: Davis First Name: Larry M.I.:

Business Name: DCM Erectors, Inc.

Address: 110 East 42nd Street, Suite 1704

City: New York State: NY Zip: 10017

Signature **Date** Oct-12-2011

CD-7 (Rev. 6/04)

NYC BUILDINGS

Notification of Raising or Lowering of Climber or Tower Crane

The completed application must reach the Cranes and Derricks Division
48 hours before the raising or lowering of a Tower Crane.

Please file 2 copies
Application must be typewritten

1. Location Of Job

Borough: Manhattan

House No(s).: 150 Greenwhich Street Street Name:

Special Place Name: WTC - Tower 4

2. Crane Information

C.D. No.: 3705 C.N. No.: Phase:

✓ External Climbing Crane ☐ Internal Climbing Crane

Dates(s) of Proposed Raising or Lowering: Day of the Week:

Note: If the crane raising / lowering operation is to be performed on weekends, holidays, or other than normal working hours, an after-hour work variance must be submitted and approved by the Cranes & Derricks Division prior to commencement of work.

3. Supervisor's Statement

Last Name: Meahan First Name: Eddie M.I.:

Business Name: DCM Erectors, Inc.

Address: 110 East 42nd Street, Suite 1704

City: New York State: NY Zip: 10017

Phone: (212) 599-1603 Fax: (212) 599-1615

I, Eddie Meahan, **am a representative of the crane manufacturer, the owner of the crane or the contractor. I have at least 3 years of experience in construction or erection of tower crane and I have been designated as the supervisor in charge of raising or lowering the above crane. I will personally check that all horizontal bracing, collars, shoring and wedges in conformance of the drawings approved by the Cranes & Derricks Division. I will also ensure the tower crane manufacturer's climbing procedure be strictly followed.**

Falsification of any statement is a misdemeanor under Section 26-124 of the Administrative Code and is punishable by a fine, imprisonment, or both.

Signature Edward Meahan **Date** 10/13/11

4. Owner or Contracator Information

Last Name: Davis First Name: Larry M.I.:

Business Name: DCM Erectors, Inc.

Address: 110 East 42nd Street, Suite 1'704

City: New York State: NY Zip: 10017

Signature **Date** Oct-17-2011

THE PORT AUTHORITY OF NY & NJ

Engineering Department
Construction Management Division

Stroh Engineering Services, P.C.
102 Vanderbilt Ave.
West Babylon, N.Y. 11704

December 6, 2011

Attn: Mr. Peter Stroh, P.E.

SUBJECT: THE WORLD TRADE CENTER-TOWER FOUR–FAVCO M760D-2
TOWER CRANE DESIGN 2A SUBMITTAL
REFERENCE: TOWER FOUR–FAVCO M760D-2 TOWER CRANE-2A

Dear Mr. Stroh:

In accordance with your agreement with Tishman Construction Company, the Port Authority of New York and New Jersey requests a design review of the Favco M760D-2 tower crane 2A. We have enclosed a disc with the following information for your use:

1. Design Brief- Cranes 2 and 2A-Check of Cranes' Support Structure for Erection Phases 1A and 1B; pages 1-79, dated 11.14.11

2. Design Brief- Crane 2A-Baseframe and Tie-in Forces, Baseframe Analysis and Member Design Check (Partial) of Baseframe Support Structure, Revision 1, pages 1-186, dated 10.5.11.

3. Drawings: DCM # CR-2A, rev. 9, dated 10.17.11, FLR 49052, rev. 1, dated 11.11.11, LP-15, rev. 7, dated 10.17.11, LP-37 rev. 3, dated 10.17.11, LE-25.1-25.6, all rev.3, dated 10.17.11, LE-26.1, dated 10.19.11, LE-26.2, dated 10.20.11, LE-26.3, rev. 1, dated 10.31.11.

4. Drawings: DCM # LP-15, rev. 8, dated 11.28.11, LP-37, rev. 4, dated 11.28.11, TA-EL-01, dated 11.28.11.

5. Drawings: DCM # 38-42, all dated 11.28.11.

If you have any questions, or require any additional information please contact Ms. Maureen Lynch-Jacobs, at **mjacobs@panynj.gov** or 973-332-2185.

Very Truly Yours,

Wallace Caban, P.E.,
Assistant Chief Engineer for Construction,
Engineering Department

Cc: A. Reiss, T. Stickelman, I. Barmas, M. Lynch-Jacobs

115 Broadway, 8th Fl.
New York, NY, 10006
T: 973-332-2185 F: 212-435-5889

TISHMAN

WTC Tower Crane Checklist (Effective 3.14.2011)

Required by Port Authority	
Prior To Delivery	
1	Current CD-2 filed with the DOB. Accompanied by proof of filing.
2	Diesel filter cut sheet
3	Fully executed CD-4 with plans, drawings, and calculations (signed and sealed by EOR)
4	Fully executed CD-7 (See section 2.3.a in Crane Approval Procedure Rev. 12)
5	CD-10 for assist crane (if required)
6	Fully executed CD-11
7	Fully executed CD-16
Upon Delivery	
1	Arrange an appointment with DOB for inspection of crane for CD-2
2	Names, classifications, and license numbers of the crane operators and master rigger
3	CD-8 (signed and sealed by EOR in box #5A)
4	Fully executed CD-12
5	Report documenting unassembled inspection (signed and sealed)
6	Load test procedure (signed and sealed)
7	Copy of safety coordination meeting log as stipulated in Section BC 3319 of the BCCNY
8	If within 200' of a subway, approval from NYCT is required
9*	Magnetic Particle Report (Tower Sections)
10*	Magnetic Particle Report (Boom Sections)
11*	Magnetic Particle Report (Ball and Hook)
12*	Load Chart
13*	DOT Permit (if required)
14*	Schedule of deliveries/erection activities
Prior to Use	
1	Inspection of the crane by DOB and a fully executed CD-2
2	EOR inspection in assembled state report (signed and sealed) and fully executed CD-8 (Box #5B) (See section 3.a.1 in Crane Approval Procedure Rev. 6)
3	Load test results (signed and sealed)
4	Fully executed CD-6 (plumbness survey, anchor bolt pull-out test, bolt torque verification)

Estimated Review time by PA is 5 days.

Highlighted = Submitted

NYC BUILDINGS

Notification of Raising or Lowering of Climber or Tower Crane

The completed application must reach the Cranes and Derricks Division
48 hours before the raising or lowering of a Tower Crane.

Please file 2 copies
Application must be typewritten

1. Location Of Job	
Borough: Manhattan	
House No(s).: 150	Street Name: GREENWHICH
Special Place Name: WTC - Tower 4	

2. Crane Information		
C.D. No.: 3705	C.N. No.:	Phase:
✓ External Climbing Crane		Internal Climbing Crane
Dates(s) of Proposed Raising or Lowering: February 09, 2012		Day of the Week: 1:00 PM

Note: If the crane raising / lowering operation is to be performed on weekends, holidays, or other than normal working hours, an after-hour work variance must be submitted and approved by the Cranes & Derricks Division prior to commencement of work.

3. Supervisor's Statement		
Last Name: Vanhees	First Name: Arnold	M.I.:
Business Name: DCM Erectors, Inc.		
Address: 110 East 42nd Street, Suite 1704		
City: New York	State: NY	Zip: 10017
Phone: (212) 599-1603	Fax: (212) 599-1615	

I, Arnold Vanhees, am a representative of the crane manufacturer, the owner of the crane or the contractor. I have at least 3 years of experience in construction or erection of tower crane and I have been designated as the supervisor in charge of raising or lowering the above crane. I will personally check that all horizontal bracing, collars, shoring and wedges in conformance of the drawings approved by the Cranes & Derricks Division. I will also ensure the tower crane manufacturer's climbing procedure be strictly followed.

Falsification of any statement is a misdemeanor under Section 26-124 of the Administrative Code and is punishable by a fine, imprisonment, or both.

Signature **Date** February 06, 2012

4. Owner or Contracator Information		
Last Name: Davis	First Name: Larry	M.I.:
Business Name: DCM Erectors, Inc.		
Address: 110 East 42nd Street, Suite 1704		
City: New York	State: NY	Zip: 10017

Signature **Date** February 06, 2012

NYC BUILDINGS

Notification of Raising or Lowering of Climber or Tower Crane

The completed application must reach the Cranes and Derricks Division
48 hours before the raising or lowering of a Tower Crane.

Please file 2 copies
Application must be typewritten

1. Location Of Job	
Borough: Manhattan	
House No(s).: 150	Street Name: GREENWHICH
Special Place Name: WTC - Tower 4	

2. Crane Information		
C.D. No.: 3705	C.N. No.:	Phase:
✓ External Climbing Crane		Internal Climbing Crane
Dates(s) of Proposed Raising or Lowering: February 09, 2012		Day of the Week: 1:00 PM

Note: If the crane raising / lowering operation is to be performed on weekends, holidays, or other than normal working hours, an after-hour work variance must be submitted and approved by the Cranes & Derricks Division prior to commencement of work.

3. Supervisor's Statement		
Last Name: Vanhees	First Name: Arnold	M.I.:
Business Name: DCM Erectors, Inc.		
Address: 110 East 42nd Street, Suite 1704		
City: New York	State: NY	Zip: 10017
Phone: (212) 599-1603	Fax: (212) 599-1615	

I, Arnold Vanhees, am a representative of the crane manufacturer, the owner of the crane or the contractor. I have at least 3 years of experience in construction or erection of tower crane and I have been designated as the supervisor in charge of raising or lowering the above crane. I will personally check that all horizontal bracing, collars, shoring and wedges in conformance of the drawings approved by the Cranes & Derricks Division. I will also ensure the tower crane manufacturer's climbing procedure be strictly followed.

Falsification of any statement is a misdemeanor under Section 26-124 of the Administrative Code and is punishable by a fine, imprisonment, or both.

Signature **Date** February 06, 2012

4. Owner or Contracator Information		
Last Name: Davis	First Name: Larry	M.I.:
Business Name: DCM Erectors, Inc.		
Address: 110 East 42nd Street, Suite 1704		
City: New York	State: NY	Zip: 10017

Signature **Date** February 06, 2012

NYC BUILDINGS

Crane / Derrick / Mobile Work Platform Approval and Operation Application / Certificate

Please File 2 Copies
Application Must Be Typewritten

For Internal Use Only	
CD Number	
Date Received	Fee Paid
Invoice No:	

2 CD Number

1. Application Type

	Original		Renewal		Change		
Equipment Type:		Mobile Crane	✓	Fix / Climber Tower Crane		Derrick	Work Platform

3. Applicant

Send correspondence to: ☐ Applicant ☐ Owner

Name: Richard Gilbert
Title: Safety & Operations Manager E-mail richard@dcmerectors.com
Company: Federated Equipment Co., L.L.C.
Address: 110 East 42nd Street, Suite 1704
City: New York State: NY Zip: 10017
Telephone: (212) 599 - 1603 Fax: (212) 599 - 1615

Owner

Name: Larry DavisPresident
Title: President E-mail ld@dcmerectors.com
Company: Federated Equipment Co., L.L.C.
Address: 110 East 42nd Street, Suite 1704
City: New York State: NY Zip: 10017
Telephone: (212) 599 - 1603 Fax: (212) 599 - 1615

4. Crane / Derrick / Work Platform Information

Prototype No.:
Manufacturer: Refer to seperate CD2 for FMC-TG1900 CD3705
Model: *Model Year:*
Serial Number:

Transmission		Power	
	Hydraulic		Gas
	Mechanical		Diesel
Capacity:			Electric

Drums

Number of Drums:

No.	Wire Rope Size
1	in.
2	in.
3	in.
4	in.

Work Platform Information

Platform Type:

	Single Mast
	Twin Mast
	Free Standing

Platforms I.D.'s:

5. Tower / Boom / Jib Section Information

Maximum Configuration: Tower Crane: Tower: Boom: Jib: Total: **Lift Crane:** Boom: Jib: Total:

Lattice Solid

DCM ERECTORS INC.
110 East 42nd St.- 1704, New York, NY 10017, Phone: (212) 599-1603, Fax: (212) 599-1615
25 Belfield Road, Etobicoke, Ontario M9W 1E8, Phone: (416) 241 - 6967, Fax: (416) 241 - 3239

TOWER 4 - CLIMBING CRANE 2A

CLIMB 01

Rigging Crew List:

Arnold Van Hees – Tower Crane Rigger
Ed Meahan – Tower Crane Rigger
Ralph Jensen – Competent Rigger/Superintendent

Fred Bartz – Crane Operator (Crane 2-CD#4193)
Michael Prendergast– Oiler (Crane 2)

Joe Miloseia – Safety Manager/Spotter

Rigging employees (Crane 2):

John Long - Foreman
Tim Long - Signalman
Ed Todesco – Connector
Garry Holder - Connector
Jeff Birdsall - Hook On
Colm McPartland – Tagline

NYC BUILDINGS

Notification of Raising or Lowering of Climber or Tower Crane

The completed application must reach the Cranes and Derricks Division
48 hours before the raising or lowering of a Tower Crane.

Please file 2 copies
Application must be typewritten

1. Location Of Job	
Borough: Manhattan	
House No(s).: 150	Street Name: GREENWHICH
Special Place Name: WTC - Tower 4	

2. Crane Information		
C.D. No.: 3705	C.N. No.:	Phase:
✓ External Climbing Crane		Internal Climbing Crane
Dates(s) of Proposed Raising or Lowering: February 09, 2012		Day of the Week: 1:00 PM

Note: If the crane raising / lowering operation is to be performed on weekends, holidays, or other than normal working hours, an after-hour work variance must be submitted and approved by the Cranes & Derricks Division prior to commencement of work.

3. Supervisor's Statement		
Last Name: Vanhees	First Name: Arnold	M.I.:
Business Name: DCM Erectors, Inc.		
Address: 110 East 42nd Street, Suite 1704		
City: New York	State: NY	Zip: 10017
Phone: (212) 599-1603	Fax: (212) 599-1615	

I, Arnold Vanhees, am a representative of the crane manufacturer, the owner of the crane or the contractor. I have at least 3 years of experience in construction or erection of tower crane and I have been designated as the supervisor in charge of raising or lowering the above crane. I will personally check that all horizontal bracing, collars, shoring and wedges in conformance of the drawings approved by the Cranes & Derricks Division. I will also ensure the tower crane manufacturer's climbing procedure be strictly followed.

Falsification of any statement is a misdemeanor under Section 26-124 of the Administrative Code and is punishable by a fine, imprisonment, or both.

Signature **Date** February 06, 2012

4. Owner or Contracator Information		
Last Name: Davis	First Name: Larry	M.I.:
Business Name: DCM Erectors, Inc.		
Address: 110 East 42nd Street, Suite 1'704		
City: New York	State: NY	Zip: 10017

Signature **Date** February 06, 2012

DCM ERECTORS INC.
110 East 42nd St.- 1704, New York, NY 10017, Phone: (212) 599-1603, Fax: (212) 599-1615
25 Belfield Road, Etobicoke, Ontario M9W 1E8, Phone: (416) 241 - 6967, Fax: (416) 241 - 3239

TOWER 4 - CLIMBING CRANE 2A

CLIMB 01

Rigging Crew List:

Arnold Van Hees – Tower Crane Rigger
Ed Meahan – Tower Crane Rigger
Ralph Jensen – Competent Rigger/Superintendent

Fred Bartz – Crane Operator (Crane 2-CD#4193)
Michael Prendergast– Oiler (Crane 2)

Joe Miloseia – Safety Manager/Spotter

Rigging employees (Crane 2):

John Long - Foreman
Tim Long – Signalman
Ed Todesco – Connector
Garry Holder - Connector
Jeff Birdsall - Hook On
Colm McPartland – Tagline

MAGNETIC PARTICLE INSPECTION REPORT

CLIENT DCM Erectors Inc. 110 East 42nd Street New York, NY 10017	**LOCATION** South Plainfield, NJ	**INSPECTION DATE** 10/20/11 & 10/24/11	
	CAN JOB NO. J12M1002	**REPORT NO.** 12M1102	
	CLIENT ORDER NO.	**SHEET** 1	**OF** 1

COMPONENT/DESCRIPTION/DRAWING NO.
Tower Sections – See Below

MATERIAL Carbon Steel		**SURFACE CONDITION** Clean / Painted
PROCEDURE/WORK INSTRUCTION/TECHNIQUE MPI IP0019		**ACCEPTANCE STANDARD**
EQUIPMENT Magna Flux Y-7 AC/DC 111	**POWER/CURRENT** 115V-60Hz	**MATERIAL THICKNESS**
METHOD MPI	**MEDIUM** Circle Systems Dusting Powder 63 RED 16223	**BACKGROUND** Black

RESULTS

The magnetic particle inspection was completed using a Magna Flux Y-7 yoke and dry particle technique. Every weld on the following list of Tower Sections was inspected 100% from two planes to insure full coverage.

No relevant indications were found during the inspection.

COMPONENTS	LENGTH
FE-21	13'–7½" X 9'-9" X 9'-9"
FE-35	13'–7½" X 9'-9" X 9'-9"
FE-19	13'–7½" X 9'-9" X 9'-9"
FE-20	13'–7½" X 9'-9" X 9'-9"
FE-34	13'–7½" X 9'-9" X 9'-9"
TGT13-019	13'–7½" X 9'-9" X 9'-9"
TGT13-021	13'–7½" X 9'-9" X 9'-9"
TGT13-023	13'–7½" X 9'-9" X 9'-9"

This report relates exclusively to the work ordered and/or the item(s) inspected. It shall not be reproduced except in full without the approval of the inspection body and the client.

CAN INSPECTOR	ISSUING AUTHORITY	CLIENT
SIGN	**SIGN**	**SIGN**
NAME Brian Harvey	**NAME**	**NAME** Richard Gilbert
QUALS ASNT TC1A MPT LII	**DATE**	**DATE** October 26, 2011

CAN

NYC BUILDINGS

Crane / Derrick and Work Platform Plumbness And Torque Notification/ Anchor Bolt Pull Out Test

Please file 2 Copies
Application Must Be Typewritten

1. Location of Job

Borough: Manhattan

House No.(s): 150 Street Name: Greenwich

Special Place Name: WTC - Transit Hall - West Tower Crane

2. Crane / Work Platform Information

Manufacturer: FMC Link-Belt Model No.: TG 1900 C.D. No.: 3705 C.N. No.:

✓ Luffing Boom: ☐ Horizontal Boom ☐ Articulating Jib ☐ Other:

Tower Crane: ☐ External Climbing Crane ☐ Internal Climbing Crane Work Platform: ☐ Single Mast ☐ Double Mast

3. Surveyor's Information

Last Name: CONKLIN First Name: JOHN M.I.:

Business Name: DCM Erectors, Inc Telephone: (212) 599-1603 Fax: (212) 599-1615

Address: 110 East 42nd St., Suite 1704

City: New York State: NY Zip: 10017

This is to Certify that I have measured the out of plumbness for 6 tower sections of the above crane with a tower height of 81' feet 9" inches. The lean towards the following directions indicated below was determined to be: 1/8 inches East/West (Direction); 1/8 inches North/South (Direction);

Signature Date 02/09/12 Date of Survey 02/09/12

4. Tower Mast Bracing Anchor Bolt Pull Out Test

Testing Laboratory: Telephone: Fax:

Address:

City: State: Zip:

Person Performing test: Title: Lic. No.: State:

I, the undersigned, am a P.E., R.A., or qualified technican of the above testing laboratory. I have performed / witnessesed the anchor bolt pull-out test for bracing support of above hoisting equipment installation. I hereby certify that the anchors safely sustained the test pull without failure.

Location	Elev. / Floor	# Tested / Total # of Anchors	Wall Construction	Attachment Type	Bolt Size	Test Load	Design Load
1		/					
2		/					
3		/					
4		/					
5		/					

Signature Date Date of Survey

STATE OF NEW YORK GREGORY VIDGOP No. 079380 LICENSED PROFESSIONAL ENGINEER

5. Supervisor's Statement

Last Name: Vanhees First Name: Arnold M.I.:

Business Name: DCM Erectors, Inc. Telephone: (212) 599-1603 Fax: (212) 599-1615

Address: 110 East 42nd St., Suite 1704

City: New York State: NY ZIP: 10017

This is to certify that the above installed Six sections were torqued to Turn of the nut method ft. lbs on by iron workers under my supervision. The manufacturer's recommended bolt-torque value is ft. lbs. The Manufacturer's allowable out of plumbness is: 1"/1200" inches East/West (Direction); 1"/1200" inches North/South (Direction);

Signature of Licensed Rigger Date 02-09-12

CD-6 Rev. 12/03

NYC BUILDINGS

Crane / Derrick and Work Platform Plumbness And Torque Notification/ Anchor Bolt Pull Out Test

Please file 2 Copies
Application Must Be Typewritten

1. Location of Job

Borough: Manhattan

House No.(s): 150 Street Name: Greenwich

Special Place Name: WTC - Transit Hall - West Tower Crane

2. Crane / Work Platform Information

Manufacturer: FMC Link-Belt Model No.: TG 1900 C.D. No.: 3705 C.N. No.:

✓ Luffing Boom: ☐ Horizontal Boom ☐ Articulating Jib ☐ Other:

Tower Crane: ☐ External Climbing Crane ☐ Internal Climbing Crane Work Platform: ☐ Single Mast ☐ Double Mast

3. Surveyor's Information

Last Name: CONKLIN First Name: JOHN M.I.:

Business Name: DCM Erectors, Inc Telephone: (212) 599-1603 Fax: (212) 599-1615

Address: 110 East 42nd St., Suite 1704

City: New York State: NY Zip: 10017

This is to Certify that I have measured the out of plumbness for 8 tower sections of the above crane with a tower height of 81' feet 9" inches. The lean towards the following directions indicated below was determined to be: 1/8 inches East/West (Direction); 1/8 inches North/South (Direction);

Signature Date 02/09/12 Date of Survey 02/09/12

STATE OF NEW YORK GREGORY VIDGOP No. 079380 LICENSED PROFESSIONAL ENGINEER

4. Tower / Mast Bracing Anchor Bolt Pull Out Test

Testing Laboratory: Telephone: Fax:

Address:

City: State: Zip:

Person Performing test: Title: Lic. No.: State:

I, the undersigned, am a P.E., R.A., or qualified technican of the above testing laboratory. I have performed / witnessesed the anchor bolt pull-out test for bracing support of above hoisting equipment installation. I hereby certify that the anchors safely sustained the test pull without failure.

Location	Elev. / Floor	# Tested / Total # of Anchors	Wall Construction	Attachment Type	Bolt Size	Test Load	Design Load
1		/					
2		/					
3		/					
4		/					
5		/					

Signature Date Date of Survey

5. Supervisor's Statement

Last Name: Vanhees First Name: Arnold M.I.:

Business Name: DCM Erectors, Inc. Telephone: (212) 599-1603 Fax: (212) 599-1615

Address: 110 East 42nd St., Suite 1704

City: New York State: NY ZIP: 10017

This is to certify that the above installed Six sections were torqued to Turn of the nut method ft. lbs on by iron workers under my supervision. The manufacturer's recommended bolt-torque value is ft. lbs. The Manufacturer's allowable out of plumbness is: 1"/1200" inches East/West (Direction); 1"1200" inches North/South (Direction);

Signature of Licensed Rigger Date 02-09-12

CD-8 Rev. 12/03

DCM ERECTORS INC.
110 East 42nd St.- 1704, New York, NY 10017, Phone: (212) 599-1603, Fax: (212) 599-1615
25 Belfield Road, Etobicoke, Ontario M9W 1E8, Phone: (416) 241 - 6967, Fax: (416) 241 - 3239

TOWER 4 - CLIMBING CRANE 2A

CLIMB 01

Rigging Crew List:

Arnold Van Hees – Tower Crane Rigger
Ed Meahan – Tower Crane Rigger
Ralph Jensen – Competent Rigger/Superintendent

Fred Bartz – Crane Operator (Crane 2-CD#4193)
Michael Prendergast– Oiler (Crane 2)

Joe Miloseia – Safety Manager/Spotter

Rigging employees (Crane 2):

John Long - Foreman
Tim Long - Signalman
Ed Todesco – Connector
Garry Holder - Connector
Jeff Birdsall - Hook On
Colm McPartland – Tagline

NYC BUILDINGS

Crane / Derrick and Work Platform Plumbness And Torque Notification/ Anchor Bolt Pull Out Test

Please file 2 Copies
Application Must Be Typewritten

1. Location of Job

Borough: Manhattan

House No.(s): 150 Street Name: Greenwich

Special Place Name: WTC - Transit Hall - West Tower Crane

2. Crane / Work Platform Information

Manufacturer: FMC Link-Belt Model No.: TG 1900 C.D. No.: 3705 C.N. No.:

✓ Luffing Boom: ☐ Horizontal Boom ☐ Articulating Jib ☐ Other:

Tower Crane: ☐ External Climbing Crane ☐ Internal Climbing Crane Work Platform: ☐ Single Mast ☐ Double Mast

3. Surveyor's Information

Last Name: CONKLIN First Name: JOHN M.I.:

Business Name: DCM Erectors, Inc Telephone: (212) 599-1603 Fax: (212) 599-1615

Address: 110 East 42nd St., Suite 1704

City: New York State: NY Zip: 10017

This is to Certify that I have measured the out of plumbness for 6 tower sections of the above crane with a tower height of 81' feet 8" inches. The lean towards the following directions indicated below was determined to be: 1/8 inches East/West (Direction); 1/8 inches North/South (Direction);

Signature Date 02/09/12 Date of Survey 02/09/12

STATE OF NEW YORK GREGORY VIDGOR No. 079380 LICENSED PROFESSIONAL ENGINEER

4. Tower / Mast Bracing Anchor Bolt Pull Out Test

Testing Laboratory: Telephone: Fax:

Address:

City: State: Zip:

Person Performing test: Title: Lic. No.: State:

I, the undersigned, am a P.E., R.A., or qualified technican of the above testing laboratory. I have performed / witnessesed the anchor bolt pull-out test for bracing support of above hoisting equipment installation. I hereby certify that the anchors safely sustained the test pull without failure.

Location	Elev. / Floor	# Tested / Total # of Anchors	Wall Construction	Attachment Type	Bolt Size	Test Load	Design Load
1		/					
2		/					
3		/					
4		/					
5		/					

Signature Date Date of Survey

5. Supervisor's Statement

Last Name: Vanhees First Name: Arnold M.I.:

Business Name: DCM Erectors, Inc. Telephone: (212) 599-1603 Fax: (212) 599-1615

Address: 110 East 42nd St., Suite 1704

City: New York State: NY ZIP: 10017

This is to certify that the above installed Six sections were torqued to Turn of the nut method ft. lbs on by iron workers under my supervision. The manufacturer's recommended bolt-torque value is ft. lbs. The Manufacturer's allowable out of plumbness is: 1"/1200" inches East/West (Direction); 1"1200" inches North/South (Direction);

Signature of Licensed Rigger Date 02-09-12

CD-6 Rev. 12/03

NYC BUILDINGS

Notification of Raising or Lowering of Climber or Tower Crane

The completed application must reach the Cranes and Derricks Division
48 hours before the raising or lowering of a Tower Crane.

Please file 2 copies
Application must be typewritten

1. Location Of Job	
Borough: Manhattan	
House No(s).: 150	Street Name: GREENWHICH
Special Place Name: WTC - Tower 4	

2: Crane Information		
C.D. No.: 3705	C.N. No.:	Phase:
✓ External Climbing Crane		Internal Climbing Crane
Dates(s) of Proposed Raising or Lowering: February 09, 2012		Day of the Week: 1:00 PM

Note: If the crane raising / lowering operation is to be performed on weekends, holidays, or other than normal working hours, an after-hour work variance must be submitted and approved by the Cranes & Derricks Division prior to commencement of work.

3. Supervisor's Statement		
Last Name: Vanhees	First Name: Arnold	M.I.:
Business Name: DCM Erectors, Inc.		
Address: 110 East 42nd Street, Suite 1704		
City: New York	State: NY	Zip: 10017
Phone: (212) 599-1603	Fax: (212) 599-1615	

I, Arnold Vanhees, am a representative of the crane manufacturer, the owner of the crane or the contractor. I have at least 3 years of experience in construction or erection of tower crane and I have been designated as the supervisor in charge of raising or lowering the above crane. I will personally check that all horizontal bracing, collars, shoring and wedges in conformance of the drawings approved by the Cranes & Derricks Division. I will also ensure the tower crane manufacturer's climbing procedure be strictly followed.

Falsification of any statement is a misdemeanor under Section 26-124 of the Administrative Code and is punishable by a fine, imprisonment, or both.

Signature **Date** February 06, 2012

4. Owner or Contracator Information		
Last Name: Davis	First Name: Larry	M.I.:
Business Name: DCM Erectors, Inc.		
Address: 110 East 42nd Street, Suite 1704		
City: New York	State: NY	Zip: 10017

Signature **Date** February 06, 2012

NYC BUILDINGS

Crane / Derrick / Mobile Work Platform Approval and Operation Application / Certificate

Please File 2 Copies
Application Must Be Typewritten

For Internal Use Only	
CD Number	
Date Received	Fee Paid
Invoice No:	

2 CD Number

1. Application Type

	Original		Renewal		Change		
Equipment Type:		Mobile Crane	✓	Fix / Climber Tower Crane		Derrick	Work Platform

3. Applicant

Send correspondence to: ☐ Applicant ☐ Owner

Name: Richard Gilbert	
Title: Safety & Operations Manager E-mail richard@dcmerectors.com	
Company: Federated Equipment Co., L.L.C.	
Address: 110 East 42nd Street, Suite 1704	
City: New York State: NY Zip: 10017	
Telephone: (212) 599 - 1603 Fax: (212) 599 - 1615	

Owner

Name: Larry DavisPresident
Title: President E-mail ld@dcmerectors.com
Company: Federated Equipment Co., L.L.C.
Address: 110 East 42nd Street, Suite 1704
City: New York State: NY Zip: 10017
Telephone: (212) 599 - 1603 Fax: (212) 599 - 1615

4. Crane / Derrick / Work Platform Information

Prototype No.:			
Manufacturer: Refer to seperate CD2 for FMC-TG1900 CD3705		Drums	Work Platform Information
Model:	Model Year:	Number of Drums:	Platform Type:
Serial Number:		No. / Wire Rope Size	☐ Single Mast
Transmission	Power	1 in.	☐ Twin Mast
☐ Hydraulic	☐ Gas	2 in.	☐ Free Standing
☐ Mechanical	☐ Diesel	3 in.	Platforms I.D.'s:
Capacity:	☐ Electric	4 in.	

5. Tower / Boom / Jib Section Information

Maximum Configuration: Tower Crane: Tower: Boom: Jib: Total: **Lift Crane:** Boom: Jib: Total:

	Latticed	Solid	
Tower/Mast Section I.D.			FE-21, FE-35, FE-19, FE-20, FE-34, TGT13-019, TGT13-021, TGT13-023
Boom Section I.D.			Refer to seperate CD2 for FMC-TG1900 CD3705
Jib / Sill / Leg Section I.D.			

6. Equipment Dimension

Overall Carrier		Tower / Mast Property	Derrick Information	
Length ft	Width ft	Tower/Mast Depth ft	Type	
Width With Outriggers Extended ft		Tower/Mast Width ft	☐ Chicago Boom	☐ Guy Derrick
Tailswing ft		Tower/Mast Height ft	☐ Gin Pole	☐ Stiffleg Derrick

7. Statement and Signatures

- The Owner certifies that he will comply with the requirements of § 15.0 of Reference Standards RS 19-2 of the Building Code regarding "Inspection Required by Owner for Cranes & Derricks."
- Falsification of any statement is a misdemeanor under § 26-124 of the Administrative Code and is punishable by a fine or imprisonment, or both.
- Falsification of any statement is a misdemeanor under § 26-124 of the Administrative Code and is punishable by a fine or imprisonment, or both.

Applicant's Signature	Date	Owner's Signature	Date
	November 29, 2011		November 29, 2011

For Internal Use Only	TCAO Issued For:
	☐ This Site Only
	Expiration Date

Issued by: Date	Approved by Cranes & Derricks Authorized Signature Date

MAGNETIC PARTICLE INSPECTION REPORT

CLIENT DCM Erectors Inc. 110 East 42nd Street New York, NY 10017	**LOCATION** South Plainfield, NJ	**INSPECTION DATE** 10/20/11 & 10/24/11	
	CAN JOB NO. J12M1002	**REPORT NO.** 12M1102	
	CLIENT ORDER NO.	**SHEET** 1	**OF** 1
COMPONENT/DESCRIPTION/DRAWING NO. Tower Sections – See Below			
MATERIAL Carbon Steel		**SURFACE CONDITION** Clean / Painted	
PROCEDURE/WORK INSTRUCTION/TECHNIQUE MPI IP0019		**ACCEPTANCE STANDARD**	
EQUIPMENT Magna Flux Y-7 AC/DC 111	**POWER/CURRENT** 115V-60Hz	**MATERIAL THICKNESS**	
METHOD MPI	**MEDIUM** Circle Systems Dusting Powder 63 RED 16223	**BACKGROUND** Black	

RESULTS

The magnetic particle inspection was completed using a Magna Flux Y-7 yoke and dry particle technique. Every weld on the following list of Tower Sections was inspected 100% from two planes to insure full coverage.

No relevant indications were found during the inspection.

COMPONENTS	LENGTH
FE-21	13'–7½" X 9'-9" X 9'-9"
FE-35	13'–7½" X 9'-9" X 9'-9"
FE-19	13'–7½" X 9'-9" X 9'-9"
FE-20	13'–7½" X 9'-9" X 9'-9"
FE-34	13'–7½" X 9'-9" X 9'-9"
TGT13-019	13'–7½" X 9'-9" X 9'-9"
TGT13-021	13'–7½" X 9'-9" X 9'-9"
TGT13-023	13'–7½" X 9'-9" X 9'-9"

This report relates exclusively to the work ordered and/or the item(s) inspected. It shall not be reproduced except in full without the approval of the inspection body and the client.

CAN INSPECTOR	ISSUING AUTHORITY	CLIENT
SIGN	**SIGN**	**SIGN**
NAME Brian Harvey	**NAME**	**NAME** Richard Gilbert
QUALS ASNT TC1A MPT LII	**DATE**	**DATE** October 26, 2011

DCM ERECTORS INC.

110 East 42nd Street Suite 1710
New York, NY 10017
United States of America

Phone: (212) 599-1603
Fax: (212) 599-1615

WELDING INSPECTION REPORT

PROJECT: World Trade Center	**INSPECTOR: M. Williams**
PROJECT ADDRESS: ***WORLD TRADE CENTER Tower Four New York, NY***	**DATE: 12/28/11**
ACCEPTANCE STANDARDS: AWS D1.1 (2010)	REF. SPEC: 05100
ACCEPTANCE CRITERIA: DRAWINGS & PROJECT SPECIFICATIONS	DWG: E1002 & E1003[3]

LOCATIONS: **4L - 4CD/409 - 408**

FRAMING / GRID **ABOVE 48TH CRANE 2A BASE FRAME**

DET. 6, 7, 16, 18, 21, 23 & 30/ SECT. A-A, B-B, K-K & R-R

STAGES OF INSPECTION:	Base Metal Preparation [X]	Fit-up & Alignment [X]	Root Pass [X]
	Intermediate Passes: [X]	Final Inspection: [X]	Re-Inspection: [ ]

MACHINE TYPE: LINCOLN	**AMPS: 139-188**	**POLARITY: DC+**
MAKE: XMT 350VS	**PROCESS: SMAW**	**POSITION: 3G, 2F, 3F & 4F**
AWS JOINT DESIGN:	**THICKNESS: .750", .312"- .625"**	**WELD SIZE : .750", .250"- .375"**
[Groove]/[**Fillet**]/ Plug / Spot / Slot / Other:	**ELECTRODE: E7018**	
BASE MATERIAL: 992 GR. 50/992 GR. 50	**DIAMETER (IF PIPE):**	

WELDER	**LICENSE #**
KENWYN NORIEGA	7194

SUMMARY OF INSPECTION:

ANGLES WELDED TO GUSSET.
PLATE WELDED TO NODE.
PLATE WELDED TO REINFORCING PLATE AND COLUMN FLANGE.

INSPECTION STATUS:	Accepted: [X]	Rejected: [ ]	Work in Progress: [ ]

DCM ERECTORS INC.

110 East 42nd Street Suite 1710
New York, NY 10017
United States of America

Phone: (212) 599-1603
Fax: (212) 599-1615

DAILY INSPECTION REPORT

PROJECT: World Trade Center Tower Four	**Inspector: M.Williams**
PROJECT ADDRESS: World Trade Center Tower Four, N.Y., N.Y.	**DATE: 12/28/11**

CRANE 2A BASEFRAME BOLTED CONNECTIONS 4TH FLOOR

DWG: E1001 [2] E1002 [3] & E1003 [3]

AT ELEVATION: +1028'- 4 1/2"

PLATES AT GIRDERS BOLTED TO PLATES AT GIRDERS COMPLETED AND ACCEPTED

DET. 4, 8, 10 & 12

AT ELEVATION: +1036'- 4 1/2"

PLATES AT GIRDERS BOLTED TO PLATES AT GIRDERS COMPLETED AND ACCEPTED

DET. 4 & 8

ANGLE CROSS BRACE

AT ELEVATION: +1028'- 4 1/2"

ANGLES BOLTED TO GUSSET COMPLETED AND ACCEPTED

DET. 1, 2, 3, 4, 5, 6, 7, 8, 9, 10, 11, 12, 16, M-M & N-N

AT ELEVATION: +1036'- 4 1/2"

ANGLES BOLTED TO GUSSET COMPLETED AND ACCEPTED

DET. 4, 8, 13, 14, 15, M-M & N-N

DIAGONAL ANGLE BRACE

FRAMED ELEVATIONS:

BET. ELEVATION: +1028'- 4 1/2" & ELEVATION: +1036'- 4 1/2"

MOST ANGLES BOLTS PRETENSIONED AND ACCEPTED [OTHERS WELDED TO GUSSET]

DET. 17, 18, 19, 20, 21, 22, 23, 24, 25, 28, 29, 30 & H-H

NYC BUILDINGS

DESIGNATION OF SAFETY COORDINATOR

Crane/Derrick/Work Platform CN#: _____ CD#: 3705

Address/ Borough: WTC - Tower 4 Block: _____ Lot: _____

Owner or Contractor

I have been apprised of the requirements to provide flag person to stop pedestrian traffic when lifting over the sidewalk and to stop vehicular traffic when lifting over the roadway. I am also aware that closing of sidewalk or roadway or temporary obstruction of same requires concurrent approval from the Department of Transportation. Mr/ Ms. Joseph Miloscia, representing the owner or contractor, has been designated as safety coordinator to ensure that these safety precautions are adhered to.

Name: Larry Davis Tel. No.: (212) 599-1603

Address: 110 East 42nd Street, Suite 1704, New York, NY 10017

Signature of Owner or Contractor: _____ Date: Dec-07-2011

Safety Coordinator

I, Joseph Miloscia (NAME), am a P.E., R.A. or a person having at least 5 years of construction experience.

I hereby certify that I will act as the designated Safety Coordinator and shall be responsible for the control of pedestrian and vehicular traffic within the designated hoisting areas. I will also supervise compliance with the Crane Notice Application and the drawings which form part of this On-Site Hoisting Device Application.

Name: Joseph Miloscia Tel. No.: (212) 599-1603

Address: 110 East 42nd Street, Suite 1704, New York, NY 10017

Signature of Safety Coordinator: Joseph Miloscia Date: 12/07/11

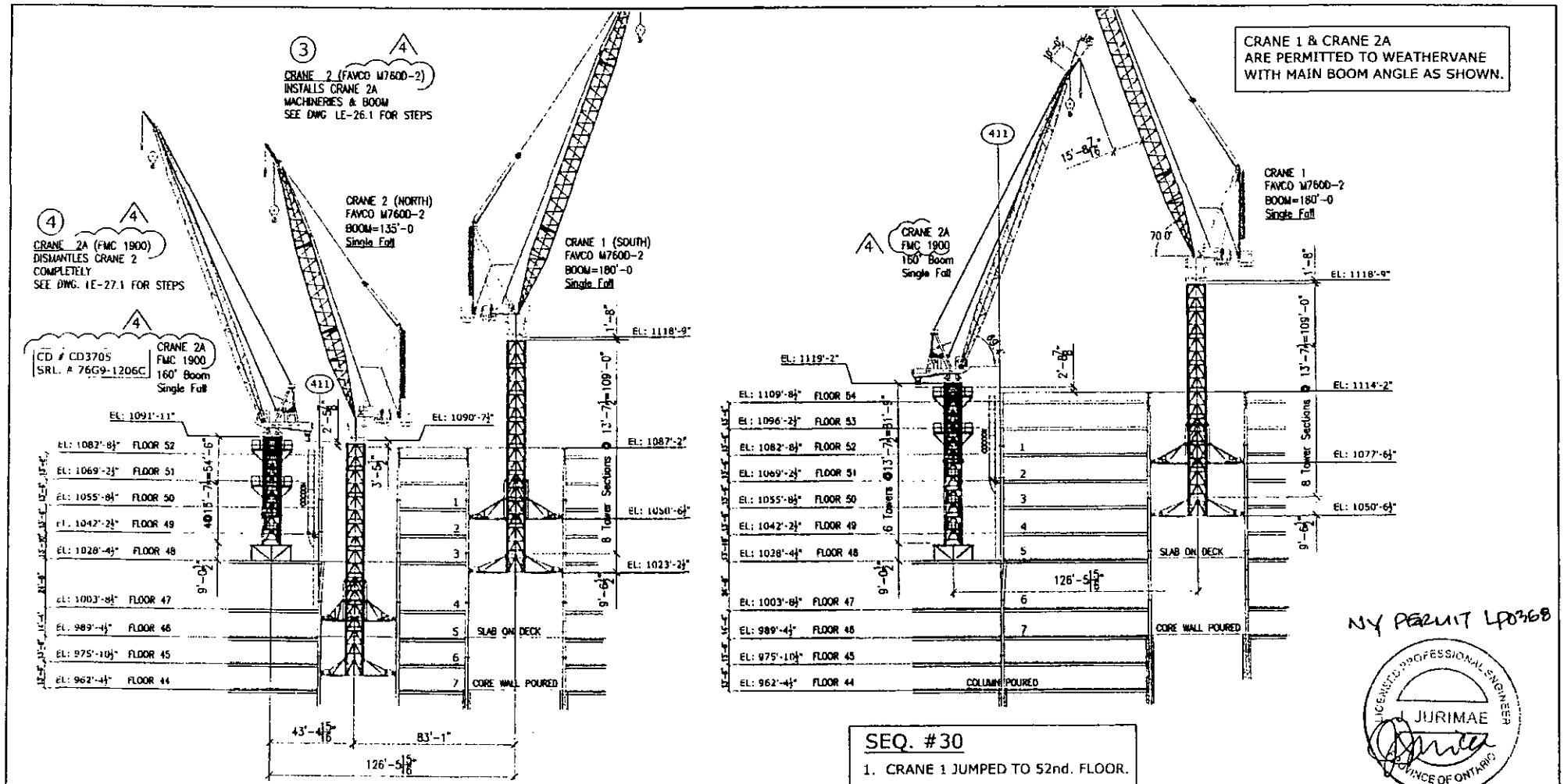

REV	DATE	DESCRIPTION
3	Oct. 17/2011	CRANE 2A CORRECTED TO SHOW FMC 1900
2	Oct. 6/2011	REFERENCE DWG. SHOWN FOR STEP 3 & STEP 4
1	Oct. 4/2011	DWG. COMPLETELY REVISED PER DISCUSSION
0	Sep. 18/2011	CRANE #2A NUMBER OF TOWER SECTIONS REVISED
0	Sep. 14/2011	FOR APPROVAL

DCM Erectors, Inc.

STRUCTURAL STEEL & MISCELLANEOUS METALS

77 Belfield Rd., Suite 100
Etobicoke, Ontario
Canada M9W 1G6
Tel: (416) 241-6067
Fax: (416) 241-3239

110 East 42nd Street
Suite 1710
New York, N.Y. 10017
Tel: (212) 599-1003
Fax: (212) 599-1615

PROJECT	WORLD TRADE CENTER TOWER 4
SITE	150 Greenwich Street, New York, N.Y.
CLIENT	FISHMAN CONSTRUCTION CORP.
TITLE	LOGISTIC ELEVATION FOR CRANE #1 & CRANE #2A
CONTRACT No.	843
DRAWN	Sept. 14/2011
CHECKED	
SCALE	
DRAWING No.	LE-25.2

Lynch-Jacobs, Maureen

From: Lawrence K Shapiro [lkshapiro@hisassoc.com]
Sent: Saturday, January 14, 2012 8:34 AM
To: Eddie Meahan; Richard Gilbert; Lynch-Jacobs, Maureen
Cc: Pierre Gonzalez; Dominique Singh; Chris Leandro; Arnold van Heese
Subject: WTC crane 2A unassembled

See below, report of satisfactory unassembled inspection of four tower sections and climbing frame.

------Original Message------
From: Dominique Singh
To: Lawrence Shapiro
To: Pierre Gonzalez
Cc: Chris Leandro
Cc: Kelly Joyce
Subject: WTC crane 2A unassembled
Sent: Jan 14, 2012 8:04 AM

Visual unassembled inspection of the following sections performed 1-13-12 are satisfactory.
Four tower sections
FE-35
FE-19
FE-20
FE-34
Climbing frame
TGCE-02

Dom's Phone
Sent via BlackBerry by AT&T

DCM ERECTORS INC.

110 East 42nd Street Suite 1710
New York, NY 10017
United States of America

Phone: (212) 599 – 1603
Fax: (212) 599 – 1615

TOWER CRANE - SAFETY MEETING

Date: 2/9/12

Foreman: John Long.

Project Name: WTC – Tower 4

Project Location: WTC, New York

TOPICS	COMMENTS FROM WORKERS
Pre-Jump Safety Meeting	
Tower Crane #2A (North)	

NAME (Please Print)	SIGNATURE
RB KNUDSEN TCC	
John Long	
CLIM McPARTLAND	
JEFF BIRDSALL	
Tim Long	
Joe Miloscia	
ARNOLD VAN HEES	

Meeting Held by: (Signature)

JOHN LONG
(Print Name)

Send copy to: Main Office, and General Contractor

Means & Method – JUMP CRANE 2A

Date: December 16, 2011 Revision 15 17

WORLD TRADE CENTER-TOWER FOUR, New York, NY – Contract 843-000

4WTC TC #2A (NORTH)
CD # 3705
JUMP # 1 (SEQ #30 ON DRG LE25
DATE OF JUMP: 02/09/12

This form is to be used immediately before you proceed with the jump. One final check

PG 01/02

PRE-JUMP CHECK LIST

			Responsibility of
Visual check of all hydraulics	Levels		CJP
	Hose Connection	Leaks	✓
	Hose condition	Cracks/Leaks	✓
Crane Bay	Clear	Safety Nets	✓
		Air hoses	✓
		Torch Hoses	✓
		Deck Projection	✓
		Other Projections	✓
Tower Crane	Not hoisting		✓
	Weathervane	Boom down wind	✓
	Balanced	One CWT off	✓
		One CWT on hook	✓
Fall protection	Platform	Perimeter cables	✓
	Structure (crane bay)	Perimeter cables	✓
Tie Downs or Yokes	Bolts	Loosened but not removed	✓
Dogs	Lifting Ring	Unlocked position	✓
	Upper basket	Unlocked position	✓
All workers positioned	2 in Lifting ring		✓
	2 in upper basket		✓
	2 in lower basket		✓

02/09/12

PG 02/02

This check list should be used 3 to 4 days prior to the jump.

VISUAL INSPECTION – PREPARING FOR JUMP

			Good	Repair/Replace
Pony Motor	Fuel Tank	Proper level	✓	
		Leaks	✓	
	Engine	Operating Condition	✓	
	Oil	Proper Level	✓	
Hydraulic Tank		ProperLevel	✓	
		Leaks	✓	
Hydraulic Hoses		Leaks	✓	
		Cracks	✓	
		Kinks	✓	
		Fitting/Clips	✓	
Hydraulic Cylinder	Main	Leaks		
		Bends/Kinks	✓	
	Outriggers	Leaks	✓	
		Bends/Kinks	✓	
Hand Rails	Lifting Ring	Bent	✓	
		Complete	✓	
	Upper basket	Bent	✓	
		Complete	✓	
	Lower Basket	Bent	✓	
		Complete	✓	
Work Platform	Lift Ring	Grating	✓	
	Upper Platform	Grating	✓	
	Lower Basket	Grating	✓	

02/09/12

Buildings

NYC .gov always open

CLICK HERE TO SIGN UP FOR BUILDINGS NEWS

NYC Department of Buildings

License Details

HOISTING MACHINE OPERATOR A

FREDERIC S BARTZ

Date Issued: 02/21/2003 **License #:** 009538
Status: A - ACTIVE **Expiration:** 10/31/2014
City Employee: No
Office Address: ,
Business Phone:

Business 1 :

If you have any questions please review these Frequently Asked Questions, the Glossary, or call the 311 Citizen Service Center by dialing 311 or (212) NEW YORK outside of New York City.

Buildings

NYC .gov always open

CLICK HERE TO SIGN UP FOR BUILDINGS NEWS

NYC Department of Buildings

License Details

TOWER CRANE RIGGER

EDWARD MEAHAN

Date Issued: 10/05/2011 **License #:** 000029
Status: A - ACTIVE **Expiration:** 09/30/2014
City Employee: No
Office Address: 110 EAST 42ND STREET STE 1704 NEW YORK, NY 10017
Business Phone: 212-599-1603

Business 1 : DCM ERECTORS INC

Insurance Type	Policy	Required	Company	Expiration Date
General Liability	EPC000589205	Yes	ARCH INSURANCE COMPANY	05/01/2012
Workers' Compensation	G 1420 777-3	Yes	NYSIF	05/01/2013
Disability	5349826-001	Yes	ZURICH AMERICAN COMPANY	09/01/2012

If you have any questions please review these Frequently Asked Questions, the Glossary, or call the 311 Citizen Service Center by dialing 311 or (212) NEW YORK outside of New York City.

Buildings

NYC.gov always open

CLICK HERE TO SIGN UP FOR BUILDINGS NEWS

NYC Department of Buildings

License Details

TOWER CRANE RIGGER
ARNOLD VAN HEES

Date Issued: 05/16/1984 **License #:** 000010
Status: A - ACTIVE **Expiration:** 05/31/2012
City Employee: No
Office Address: 110 EAST 42ND STREET,STE 1704 NEW YORK, NY 10017
Business Phone: 212-599-1601

Business 1 : DCM ERECTORS, INC

If you have any questions please review these Frequently Asked Questions, the Glossary, or call the 311 Citizen Service Center by dialing 311 or (212) NEW YORK outside of New York City.

THIS CERTIFIES THAT

Ralph Jensen

Has successfully completed the N.Y.C. D.O.B. recognized Tower Crane Safety Course

Joint Apprentice Committee
Ironworkers Local 40 & 361
35-23 236th Street
Astoria, NY 11106

Instructor

Issued: 2/28/09
Expires: 2/28/12

THIS CERTIFIES THAT

Ralph Jensen

HAS SUCCESSFULLY COMPLETED
THE IRONWORKERS
OSHA **10** HOUR CONSTRUCTION
WORKER STANDARDIZED SAFETY
AND HEALTH TRAINING COURSE
DATE **11/15/08**

Joseph J. Hunt
General President

Ex-1

CERTIFICATE ISSUED BY NYC FIRE DEPT

CERT # 83681700 N
ISSUED 05/21/2008 EXPIRES 05/21/2011

NAME JOHN K LONG
HOME
ADDR. !

NOT
FDNY
EMPLOYEE

FEE $ 25 CAT. G44 TYPE Fitness
DESC. STORE/SALE/USE OF LPG

EMPLOYER LOCAL #40
WORK
LOCATION

THIS CERTIFIES THAT
John Long Jr.
Has successfully completed the N.Y.C. D.O.B. recognized **Tower Crane Safety Course**

Joint Apprentice Committee
Ironworkers Local 40 & 361
35-23 36th Street
Astoria, NY 11106

Instructor

Issued: 2/28/09
Expires: 2/28/12

THIS CERTIFIES THAT
John K. Long Jr.
HAS SUCCESSFULLY COMPLETED
THE IRONWORKERS
OSHA 10 HOUR CONSTRUCTION
WORKER STANDARDIZED SAFETY
AND HEALTH TRAINING COURSE
DATE 6/27/09

Joseph J. Nelus
General President

THIS CERTIFIES THAT
John Long Jr.
Has successfully completed the
N.Y.C. D.O.B. recognized
Scaffold User Safety Training Course

Joint Apprentice Committee
Ironworkers Locals 40 & 361
35-23 36th Street
Astoria, NY 11106

Instructor

Issued: 6/27/09
Expires: 6/27/13

THIS IS NOT A RIGGERS LICENSE

THIS CERTIFIES T

THIS CERTIFIES THAT

Jeff Birdsall

Has successfully completed the N.Y.C. D.O.B. recognized **Tower Crane Safety Course**

Joint Apprentice Committee
Ironworkers Local 40 & 361
35-23 236th Street
Astoria, NY 11106

Instructor

Issued: 2/28/09
Expires: 2/28/12

THIS CERTIFIES THAT

JEFFREY BIRDSALL

HAS SUCCESSFULLY COMPLETED THE TRAINING REQUIREMENTS SET FORTH BY OSHA STANDARDS 1926.750 THROUGH .761
SUBPART R, STEEL ERECTION

GENERAL PRESIDENT 5/9/05 DATE INSTRUCTOR

THIS CERTIFIES THAT

Jeff Birdsall

Has successfully completed the N.Y.C. D.O.B. recognized **Scaffold User Safety Training Course**

Joint Apprentice Committee
Ironworkers Locals 40 & 361
35-23 36th Street
Astoria, NY 11106

Instructor

Issued: 6/27/09
Expires: 6/27/13

THIS IS NOT A RIGGERS LICENSE

THIS CERTIFIES THAT

Jeff Birdsall

HAS SUCCESSFULLY COMPLETED THE IRONWORKERS OSHA 10 HOUR CONSTRUCTION WORKER STANDARDIZED SAFETY AND HEALTH TRAINING COURSE

DATE **6/27/09**

Joseph J. Hunt
General President

GARY HOLDER

THIS CERTIFIES THAT

Gary Holder

HAS SUCCESSFULLY COMPLETED THE TRAINING REQUIREMENTS SET FORTH BY OSHA STANDARDS 1926.750 THROUGH .761

SUBPART R, STEEL ERECTION

GENERAL PRESIDENT — 8/22/07 DATE — INSTRUCTOR

Lead Hazard Training For IRONWORKERS

Name: Gary J Holder

Course: Lead Hazard

Hours: 32

Issues: 2/17/2008

Cert No: 0171-0208-W

29 CFR PART 62
Interim Lead Standard
For Construction

THIS CERTIFIES THAT

Gary Holder

HAS SUCCESSFULLY COMPLETED THE IRONWORKERS OSHA **10** HOUR CONSTRUCTION WORKER STANDARDIZED SAFETY AND HEALTH TRAINING COURSE

DATE **8/23/07**

Joseph J. Hunt
General President

OSHA Occupational Safety and Health Administration

WK 0015874

This acknowledges that

Gary Holder Jr.

has successfully completed

Course # 7600 - Disaster Site Worker (16 Hour)

This course emphasizes awareness of the safety and health hazards that may be encountered at natural or man-made disaster sites, as well as the importance of personal protective equipment, decontamination, and incident command participation.

Trainer — 1/31/09 Completion Date

THIS CERTIFIES THAT

Gary Holder

Has successfully completed the N.Y.C. D.O.B. recognized **Scaffold Safety Training Course**

Joint Apprentice Committee
Ironworkers Local 40 & 361
35-23 236th Street
Astoria, NY 11106

Instructor — **Certificate #** IWAT 6102 — **Date:** 12/13/08

THIS IS NOT A RIGGERS LICENSE

THIS CERTIFIES THAT

Gary Holder Jr.

Has successfully completed the N.Y.C. D.O.B. recognized **Tower Crane Safety Course**

Joint Apprentice Committee
Ironworkers Local 40 & 361
35-23 36th Street
Astoria, NY 11106

Instructor — **Issued:** 2/20/10 — **Expires:** 2/20/13

08430.01.04 Inspection 02-09-12

March 1st, 2012

Howard I. Shapiro & Associates
Consulting Engineers, P.C.
303 Merrick Road Suite 400 Lynbrook, NY 11563
Tel (516) 791-2600 Fax (516) 791-5425 Cell (917) 721-8290
LKShapiro@HISAssoc.com

The desk of
Lawrence K. Shapiro, P.E.

NYC Department of Buildings
Crane & Derrick Division
280 Broadway
New York, NY 10007

Attn: Delia Shumway, P.E., Director

Ref: **World Trade Center Tower #4 – 175 Greenwich Street, NYC**
FMC TG-1900 Crane 2A - CD #3705
Pre-Jump Inspection 02/09/2012 - (2) tower sections to be added

Dear Mrs. Shumway:

A technician under my direction inspected the tower crane on the indicated date, in anticipation of jumping the crane and adding two tower sections. The inspection focused on aspects of the installation relevant to the mast support. The purview of our inspection excludes the mechanical functions of the climbing mechanism, the crane, and aspects of the crane unrelated to the mast support.

The undersigned is not responsible for latent defects that cannot be reasonably detected by visual inspection or for supervision of persons not on the staff of Howard I. Shapiro & Associates, P.C.

The inspector reported no deficiencies or discrepancies that would compromise the support of the crane at the time of the inspection.

Regards,

Lawrence K. Shapiro, P.E.

Form HIS-II

HOWARD I. SHAPIRO & ASSOCIATES
CONSULTING ENGINEERS, P.C.

303 Merrick Road Suite 400
Lynbrook, NY 11563
Tel (516) 791-2600
Fax (516) 791-5425

Inspection Report

Job #: 08430.01.04	**Task #:** IC	**Insp. Date:** 2-09-2012
Inspector: D.Singh/ C. Leandro	**Others Present:** Rigger/ Tishman/ DCM Crew	
Location: WTC Tower 4; Crane 2A. (CD 3705)		
Description: Unassembled inspection of additional two tower sections/ pre jump inspection.		
Documentation: Magnetic particle inspection report/ installation drawings.		
Criteria: To establish structural integrity of sections/ crane supports in preparation for jump.		

Observations:

Boom Sections:

1) TGT-13-021

2) TGT-13-023

No deficiencies found.

Pre-jump:

1) Checked bolts and connections for dunnage.

2) Visual inspection of mast.

No deficiencies found.

Engineer's Comments:

Inspector's Initials:	**Engineer's Initials & Date:** 3/1/12	**Attach. Sheets:**

DCM ERECTORS INC.

WTC – TOWER FOUR

MEANS & METHODS

INSTALLATION

TOWER CRANE 2A

Revision: **00**
Dated: **December 23, 2011**

FOREWORD

This means and methods is written for the installation of the top climbing tower crane known as Tower Crane 2A that is required for the completion of the installation of the structural steel past the 52nd floor at Tower 4.

For assembling the Tower Crane 2A the North tower crane (Favco CD4193) will be used to hoist the pieces in place with the trucks staged at the corner of Cortland Street and Greenwich Street for off-loading.

As an alternate we can also use Tower Crane #1 (South) for erecting some of the pieces of Crane 2A. as long as within the capacity as shown in the New York City approved load chart.

We have generated various logistic and erection diagrams and they are listed on the next page.

DCM ERECTORS INC.
110 East 42nd Street Suite 1710
New York, NY 10017
United States of America
Phone: (212) 599 – 1603
Fax: (212) 599 – 1615

DRAWING LIST

Assembly of support steel:

LP-38	-Rev.	00	Crane #2A Dunnage Logistic
LP-39	-Rev.	00	Crane #2A Dunnage Logistic
LP-40	-Rev.	00	Crane #2A Dunnage Logistic
LP-41	-Rev.	00	Crane #2A Dunnage Logistic
LP-42	-Rev.	00	Crane #2A Dunnage Logistic

Assembly of tower crane and climbing frame

LE-26.1	-Rev.	02	Installation of Crane #2A on 48th floor.
LE-26.2	-Rev.	00	Installation of Crane #2A on 48th floor.
LE-26.3	-Rev.	01	Installation of Crane #2A on 48th floor.

Climbing Schedule for tower crane 2A

LE-25.1	-Rev.	04	Logistic Elevation for Crane #2 and Crane #2A
LE-25.2	-Rev.	04	Logistic Elevation for Crane #1 and Crane 2A
LE-25.2A	-Rev.	04	Crane #2A above 48th floor collar and tie elevation.
LE-25.3	-Rev.	04	Logistic Elevation for Crane #1 and Crane 2A
LE-25.4	-Rev.	03	Logistic Elevation for Crane #1 and Crane 2A
LE-25.5	-Rev.	04	Logistic Elevation for Crane #1 and Crane 2A
LE-25.6	-Rev.	03	Logistic Elevation for Crane #1 and Crane 2A

General Information

LP-15	-Rev.	07	North Crane #2A FMC1900 on top of 48th Floor
LP-37	-Rev.	03	Logistic Plan for Crane #1 and Crane #2A
CR-2A	-Rev.	09	Crane #2A above 48th floor FMC1900 Tower Sections + Climber
FLR_49-52	-Rev.	01	Floor 49th thru 52nd Framing with crane #2 in place

DCM ERECTORS INC.
110 East 42nd Street Suite 1710
New York, NY 10017
United States of America
Phone: (212) 599 – 1603
Fax: (212) 599 – 1615

NARATIVE

Prior Start of Assembly:
Ensure that you have all the latest drawings for the assembly of the tower crane #2A. Verify with Mr. Gary Decock (drafting department) at (416) 241 – 6967.

The assembly supervisor will ensure that a complete and latest set of drawings is available on site for reference. The assembly supervisor can contact ahead of time our drafting manager Mr. Garry Decock at (416) 241-6967.

Support Steel Assembly (drawings LP-38, LP-39, LP-40, LP-41 and LP-42):

Erection diagram LP-38 provides a view of the complete support steel framing that need to be assembled firs.

LP-38 also provides all piece marks for each individual pieces and in what sequence they are to be erected in place. It is very important for the crew supervisor to have these drawings at the work area on the 48th floor and constantly refer to them to follow the proper sequence of assembly.

Beside erection diagram (LP-38) there are LP-39, LP-40, LP-41 and LP-42 that provide a view of the support steel frame assembly in steps with the minimum rigging size to be used.

The mast of the tower crane will be supported on top of pieces 1004K1 and 1003K1 where there are connections provided for the tower sections feet.

ASSEMBLY NOTES:

- In order to finalize the bolting of the support steel we will need to temporarily install a standard tower section on top of the support steel.
- Finalize the bolting of the support steel.
- We could leave the tower section in place and have it inspected at the time of the un-assembled inspection to be performed by Cranes & Derricks or the tower section could be removed.

SAFETY NOTES:

- At the start of assembly of the support steel frame, a tool box meeting must be held with the crew involved in that task reviewing the various steps of assembly.
- All rigging (slings, shackles, hooks) must be visually inspected by a competent person (rigger) prior to its use.
- Refer to drawings for minimum sizes of rigging to be used.
- The licensed tower rigger or Master rigger must be present at all times of this operation.
- Follow directions from the licensed tower rigger.
- If not sure of something; do not take a chance, ask the licensed tower rigger for additional information.
- This phase falls under the new OSHA Crane Standard 1926 Subpart CC (1926.1400 to 1926.1442).
- This phase also falls under NYC Cranes & Derricks where all workers involved in the tower crane erection must have a Tower Crane Safety Certificate issued by NYC-DOB.

Tower Crane Assembly (LE-26.1, LE-26.2 and LE-26.3):

ASSEMBLY NOTES:

The installation of the tower crane mast and upper works can only start after the following requirements have been met

- **The CD7 has been completed with dates.**
- **The EOR of the tower crane or his designee have inspected and approved the installation of the support steel for tower crane 2A.**
- **Scheduling the un-assembled inspection to be performed by Cranes & Derrick.**
- **The coordination meeting has been held**

The drawings mentioned above are to be used to follow the sequence of the assembly of the mast, climbing frame and upper works of the crane. The manufacturer's operations manual can also be referred to.

LE-26.1 to LE-26.3 also show the weight of each major piece and what quantity and minimum size of rigging to be used to hoist each piece in place..

Please pay special attention to step 11 shown on drawing LE-26.3 for use of crane 2A and start of dismantling of crane 2.

Due to the note mentioned above we may elect to erect all components of crane 2A with crane 2 (North). This would be step 1 to step 9 as shown on drawings LE-26.1 and LE-26.2. The boom of crane 2 then would be removed by crane #1 (please refer to means & method for dismantling crane 2, drawing LE-27.2) and the boom of crane 2A installed by crane #1 (South).

SAFETY NOTES:

- At the start of assembly of the support steel frame, a tool box meeting must be held with the crew involved in that task reviewing the various steps of assembly.
- All rigging (slings, shackles, hooks) must be visually inspected by a competent person (rigger) prior to its use.
- Refer to drawings for minimum sizes of rigging to be used.
- The licensed tower rigger or Master rigger must be present at all times of this operation.
- Follow directions from the tower rigger.
- If not sure of something; do not take a chance, ask the tower rigger for additional information.
- The tower crane Operator's Manual must be available on site for reference if required.
- This phase falls under the new OSHA Crane Standard 1926 Subpart CC (1926.1400 to 1926.1442).
- This phase also falls under NYC Cranes & Derricks where all workers involved in the tower crane erection must have a Tower Crane Safety Certificate issued by NYC-DOB.

SAFETY

110 East 42nd Street Suite 1710
New York, NY 10017
United States of America

Phone: (212) 599 – 1603
Fax: (212) 599 – 1615

IF USING THE LIBERTY STREET STAGING AREA

THE TRUCKS USING THE GATES

MUST NOT BLOCK AT ANY TIME THE EXIT ROUTE

OF THE FIRE HOUSE THAT IS LOCATED ON LIBERTY St.

IF THE ALARM SOUNDS,

THE TRUCKS MUST STOP ALL MOVEMENTS,

MAKE CERTAIN

THEY ARE NOT BLOCKING THE FIRE TRUCKS EXIT

TASK	HAZARD	PROTECTION
Guiding trucks inside the site fence	Vehicular traffic	Wear traffic vest and have an orange flag at all times while directing traffic on public roadway.
		Keep looking at oncoming traffic. No distraction like talking on a cell phone or having a conversation with co-workers. Pay attention.
		If guiding trucks on Liberty St., ensure that all movement on the actual street are kept to the shortest duration.
		While on liberty St., if fire house alarm sound, have truck move in completely inside site fence as quickly as possible. Reposition truck if necessary after all emergency vehicles have exited the station.
	Trucks	Wearing the proper PPE, make certain that you keep eye contact with the driver.
		Do not position yourself between the truck and a hard place like jersey barrier, concrete wall, fence, etc...
		The trailer must have its brake set and wheels chocked.

TASK	HAZARD	PROTECTION
	Trucks	To gain access to the bed of the trailer you must use the tractors step, the step bumper or a ladder leaning against the trailer with a 3' extension above the bed surface and secured to the trailer or held in place by a coworker.
Unloading truck	Struck by	When un-binding the chains or straps holding the load, position yourself away from the chains or straps and away or clear from the load in the event it shifts.
		High visibility vest is not required for the workers that are connecting the tower crane components.
	Slips and fall	Check the trailer deck for ice or other sliding or falling causes.
Assembling the tower crane	Eye injury	Safety glasses must be worn when driving boom pins or bolting tower sections
		Safety glasses can be removed while guiding tower crane components in place.
	Pinched fingers or other parts of the body	Be aware of where you put any part of your body in the event the piece shifts.
	Struck by	Stay away from the load path if you are not directly involved in the placement of that piece.

TASK	HAZARD	PROTECTION
Assembling the tower crane	Overhead protection	Weather permitting; the signalman will use an air horn to warn other workers when performing a lift.. If an air horn is not usable, other means (whistle, radio, cell phone) will be used to warn the other trades.
		Check for ice that may have formed on the components of the tower crane. Remove all ice or other material that could become dislodge while hoisting.
		All loads to be guided by tag lines(s) to control their movements.
		All slings will be visually inspected by the rigging foreman prior each lifts.
		Prior to hoisting a piece, it will be visually inspected for loose object(s) that could fall while hoisting the piece.
	Fall protection	All workers assembling the tower cranes will wear a full body harness equipped with double lanyards or retractable at all times. **They shall use the fall protection equipment if exposed to a fall hazard of 15' or more as per OSHA regulations. (Subpart CC)**

		We will provide our workers with the equipment required for fall protection.
	General Notes	Make certain all workers involved in the installation of the tower crane have the proper credentials on their person.
		Ensure that the latest drawings are at the work area readily available for reference.
		NO SMOKING ON SITE
		All personnel protection to be used when required as per OSHA standard. (Hard hats, safety glasses, full body harness and lanyard, work boots, gloves, etc...
		Communication system is in good working order. Hand signals, hard wire system or radio)
		Crane operator to stop all movements of the load if contact is lost with the signalman.
		Pay attention to your surroundings, stay alert.

The form below will be used on the first day of the tower crane assembly. A copy signed by all workers involved will be provided first day of the assembly of the tower crane.

DCM ERECTORS INC.

110 East 42nd Street Suite 1710
New York, NY 10017
United States of America

Phone: (212) 599 – 1603
Fax: (212) 599 – 1615

Pre-jump Safety Meeting Sign-in Sheet

Project Name: **WTC - Tower Four**

Project Location: **World Trade Center**

Crane Designation: **Tower Crane #2A**

Meeting held on: **TBA**

TOPICS	DISCUSSED
Scope of work	**Assembly of Tower Crane #2A**
Roles and responsibilities	**Attached description**
Sequence of work	**See sequencing in attached drawings**
Compliance with manufacturer's operations manual.	**Yes**
Inspection of tools	**Rigging and hand tools**
Permits	**N/A**
Date of Assembly	**TBA**
Time of Assembly	**7:00 AM**
Weather forecasts	**To be checked**

110 East 42nd Street Suite 1710
New York, NY 10017
United States of America

Phone: (212) 599 – 1603
Fax: (212) 599 – 1615

	NAMES	SIGNATURE
1	General Contractor Tishman Construction Corporation	
3	Licensed Tower Rigger DCM Erectors, Inc.	
3	Rigging Foremen DCM erectors, Inc.	
4	Crane Safety Coordinator DCM Erectors, Inc.	
5	Site Safety Manager Tishman Construction Corporation	
6	Licensed Crane Operator DCM Erectors, Inc.	
6	Crane Oiler DCM Erectors, Inc.	
	Climbing System Operator DCM Erectors, Inc.	
	Ironworkers DCM Erectors, Inc.	
	Signalman DCM erectors, Inc.	
	Alternates DCM Erectors, Inc.	

SAFETY WHILE ERECTING THE TOWER CRANE

- Only personnel directly involved with the assembly of the tower crane are allowed on the various platforms of the or in the cab of the tower crane.
- All workers are to wear a full body harness and lanyard or retractable with shock absorber at all times during the assembly of the tower crane.
- If a worker has to step outside the handrail system of the various platforms; he must first tie-off to a steel member or the tower crane assembly and then step outside of the hand-rail surrounding the platform.
- All PPE such as safety glasses, hard hat, work boots and others must be worn per site or OSHA requirements.
- Stop all movements and secure crane if wind exceeds 30 mph.
- Be aware of moving parts (pinch points).

NO SMOKING ON SITE (new NYFD rule city wide)

DCM ERECTORS INC.

110 East 42nd Street Suite 1710
New York, NY 10017
United States of America

Phone: (212) 599 – 1603
Fax: (212) 599 – 1615

TOWER CRANE - SAFETY MEETING

Date: _____

Foreman: _____

Project Name: WTC – Tower 4

Project Location: WTC, New York

TOPICS	COMMENTS FROM WORKERS

NAME *(Please Print)*	SIGNATURE

Meeting Held by: _____
(Signature)

_____
(Print Name)

Send copy to: Main Office, and General Contractor

DCM ERECTORS INC.
110 East 42nd Street Suite 1710
New York, NY 10017
United States of America
Phone: (212) 599 – 1603
Fax: (212) 599 – 1615

INFORMATION FOR PRE-COORDINATION MEETING

AGENDA

Crane to be assembled:	**Tower Crane #2A**
Date of Climb:	**January 21, 2010 (weather permitting)**
Time of Climb:	**7:00 AM**
Duration:	**Approximately 3 days**
Installation starting elevation:	**1,028 – 4 ½"**
Installation end elevation:	**1,091 – 11" at underside of rubella**
Weather forecast:	**See attached weather forecast**
Pre Jump safety meeting:	**Day of start of assembly at 7:00 AM** *All involved in climb to be present* *Review task of each worker*
Rigging required:	**See installation drawings for rigging.**
Nylon slings:	**NONE**
Tie back or collars:	**Not in this phase**
Tools or equipment required:	**North and South Tower Cranes plus hand tools**
Safety:	Only those involved to be in tower crane climb No trades to be below crane being climbed. No trades to be on top of adjacent cells in core **Full body harness and lanyard to be used if exposed to fall over 15' as per OSHA Subpart CC** Safety glasses can be removed when verifying plumbness of crane or clearances.

DCM ERECTORS INC.
110 East 42nd Street Suite 1710
New York, NY 10017
United States of America
Phone: (212) 599 – 1603
Fax: (212) 599 – 1615

LIST OF ATTACHMENTS

Attachment A ..... **Various C&D form**

Attachment B ..... **Support Steel Installation Drawings**

Attachment C ..... **Tower Crane Installation Drawings**

Attachment D ..... **Climbing Schedule Drawings**

Attachment E ..... **General Information Drawings**

Attachment F ..... **OSHA Subpart CC**

DCM ERECTORS INC.

110 East 42nd Street Suite 1710
New York, NY 10017
United States of America

Phone: (212) 599 – 1603
Fax: (212) 599 – 1615

ATTACHMENT A

(All Back Up was submitted under separate package)

DCM ERECTORS INC.

110 East 42nd Street Suite 1710
New York, NY 10017
United States of America

Phone: (212) 599 – 1603
Fax: (212) 599 – 1615

ATTACHMENT B

(Support Steel Installation Drawings

Means & Method – Installing Tower Crane #2A

Date: **December 23, 2011** Revision

WORLD TRADE CENTER-TOWER FOUR, New York, NY – Contract 843-000

DCM ERECTORS INC.

110 East 42nd Street Suite 1710
New York, NY 10017
United States of America

Phone: (212) 599 – 1603
Fax: (212) 599 – 1615

ATTACHMENT C

(Tower Crane Installation Drawings)

Means & Method – Installing Tower Crane #2A

Date: **December 23, 2011** Revision

WORLD TRADE CENTER-TOWER FOUR, New York, NY – Contract 843-000

DCM ERECTORS INC.

110 East 42nd Street Suite 1710
New York, NY 10017
United States of America

Phone: (212) 599 – 1603
Fax: (212) 599 – 1615

ATTACHMENT D

(Climbing Schedule Drawings

Means & Method – Installing Tower Crane #2A

Date: **December 23, 2011** Revision

WORLD TRADE CENTER-TOWER FOUR, New York, NY – Contract 843-000

DCM ERECTORS INC.

110 East 42nd Street Suite 1710
New York, NY 10017
United States of America

Phone: (212) 599 – 1603
Fax: (212) 599 – 1615

ATTACHMENT E

(General Information Drawings)

Means & Method – Installing Tower Crane #2A

Date: **December 23, 2011** Revision

WORLD TRADE CENTER-TOWER FOUR, New York, NY – Contract 843-000

DCM ERECTORS INC.

110 East 42nd Street Suite 1710
New York, NY 10017
United States of America

Phone: (212) 599 – 1603
Fax: (212) 599 – 1615

ATTACHMENT F

(OSHA Subpart CC – Cranes & Derricks)

Means & Method – Installing Tower Crane #2A

Date: **December 23, 2011** Revision

WORLD TRADE CENTER-TOWER FOUR, New York, NY – Contract 843-000

DCM ERECTORS INC.

WTC – TOWER FOUR

MEANS & METHODS

CLIMBING

TOWER CRANE 2A

Revision: **00**
Dated: **February 01, 2012**

110 East 42nd Street Suite 1710
New York, NY 10017
United States of America

Phone: (212) 599 – 1603
Fax: (212) 599 – 1615

FOREWORD

This tower crane known as Crane 2A at Tower 4 was installed in the Top Climber Configuration.

This type of climbing system has been used for a very long time even though it is slower then our internal climbing system it sometimes remain the only way we can move a crane vertically to follow the progress of the high-rise being built.

DGM ERECTORS INC.
110 East 42nd Street Suite 1710
New York, NY 10017
United States of America
Phone: (212) 599 – 1603
Fax: (212) 599 – 1615

DRAWING LIST

Climbing Schedule for tower crane 2A

LE-25.1	-Rev.	04	Logistic Elevation for Crane #2 and Crane #2A
LE-25.2	-Rev.	04	Logistic Elevation for Crane #1 and Crane 2A
LE-25.2A	-Rev.	04	Crane #2A above 48th floor collar and tie elevation.
LE-25.3	-Rev.	04	Logistic Elevation for Crane #1 and Crane 2A
LE-25.4	-Rev.	03	Logistic Elevation for Crane #1 and Crane 2A
LE-25.5	-Rev.	04	Logistic Elevation for Crane #1 and Crane 2A
LE-25.6	-Rev.	03	Logistic Elevation for Crane #1 and Crane 2A

General Information

LP-15	-Rev.	07	North Crane #2A FMC1900 on top of 48th Floor
LP-37	-Rev.	03	Logistic Plan for Crane #1 and Crane #2A
CR-2A	-Rev.	09	Crane #2A above 48th floor FMC1900 Tower Sections + Climber
FLR_49-52	-Rev.	01	Floor 49th thru 52nd Framing with crane #2 in place

NARATIVE

Prior Start of Climb:
Ensure that you have all the latest drawings for the assembly of the tower crane #2A. Verify with Mr. Gary Decock (drafting department) at (416) 241 – 6967.

The assembly supervisor (director) will ensure that a complete and latest set of drawings is available on site for reference. The assembly supervisor can contact ahead of time our drafting manager Mr. Garry Decock at (416) 241-6967.

A safety meeting for all involved in this moved must be held at the beginning of the climb. The purpose of the meeting is to review the tasks of each of the team members.

Due to Cranes & Derricks rule an un-assembled inspection of the tower sections will be performed. If the tower sections were not listed on the original CD2, the serial number of each section must be entered on that form.

CLIMB

The drawings included in attachment A will provide you with the following information:

- The Starting elevation at under the rubella of each climb.
- The amount of tower sections to be added.
- The installation of a building tie if required.
- The final elevation at under the rubella of each climb..

The manufacturer's climbing procedure has been included in Attachment B.

At the end of the climb a form CD6 must be completed noting the plumbness of the crane at the end of the climb.

DCM ERECTORS INC.
110 East 42nd Street Suite 1710
New York, NY 10017
United States of America
Phone: (212) 599 – 1603
Fax: (212) 599 – 1615

SAFETY

DCM ERECTORS INC.
110 East 42nd Street Suite 1710
New York, NY 10017
United States of America
Phone: (212) 599 – 1603
Fax: (212) 599 – 1615

IF USING THE LIBERTY STREET STAGING AREA

THE TRUCKS USING THE GATES

MUST NOT BLOCK AT ANY TIME THE EXIT ROUTE

OF THE FIRE HOUSE THAT IS LOCATED ON LIBERTY St.

IF THE ALARM SOUNDS,

THE TRUCKS MUST STOP ALL MOVEMENTS,

MAKE CERTAIN

THEY ARE NOT BLOCKING THE FIRE TRUCKS EXIT

TASK	HAZARD	PROTECTION
TRUCK POSITIONNING	Struck by	When guiding a truck in place make certain the truck driver can see you at all times. If behind a truck and you cannot see the driver in his side mirrors, he cannot see you either.
		Wear a high visibility vest when guiding a truck to or from its unloading position.
		Make clear hand signals that the driver will understand easily.
		Do not stand between the truck or trailer and a hard place when guiding the trucks to be unloaded.
		Make sure the truck path is clear of debris or other interferences.
		Make certain other trades are not in or close to the truck path.
		Verify that the bindings (chains, straps, etc...) are still in place and holding the load in place.
	Public safety	Make sure that no pedestrian cross behind the truck that is being positioned.
		Make certain that all vehicular traffic is stopped and away from the truck path.

TASK	HAZARD	PROTECTION
LOADING or UNLOADING TRUCKS	Struck by meterial	Always be on the look out for protruding parts of the load that could strike you.
		Make certain the load has not shifted and dislodge part of the load.
		After the load has been rigged for hoisting, stand clear as the load. Part of it may shift and strike you.
	Struck by chains or straps	When unfastening the chains or straps holding loads in place, stand clear as the slings or straps are under tension and way swing when released.
		When pulling on chains or straps to remove them, make certain no one else are on the other side of the bed and could be struck by the loose end of the chain or sling you are pulling on.
	Injuries to ankles	Always use steps provided on the trailers or a ladder to climb up or down from trailer. Do not jump off the trailer bed.
		When walking on the trailer bed, watch for the loosened straps or chains and the load components. You could hit your shins against them.
	Trips and falls	Be aware of loosened chains or straps as you may trip over them and onto or off the trailer.
		The load may have shifted in transport, be aware of loose piece or out of place pieces that may be a tripping or slipping hazard.
		When the load is not held by the chains or straps, it may shift under your weight. Avoid walking on the load if possible.

TASK	HAZARD	PROTECTION
LOADING or UNLOADING TRUCKS	Overhead protection	Keep other workers not involved in the hoisting operations out of the drop zone as described in OSHA Subpart CC.
		Do not loose eye contact of the load while it is being hoisted.
		Before hoisting; check the load for loose pieces (bolts, timber, small plates, etc...) that could get dislodge and fall while the load is hoisted.

TASK	HAZARD	PROTECTION
TOWER CRANE CLIMBING USING AN INTERNAL CLIMBING SYSTEM	Site awarness	A coordination meeting must have been held with the controlling contractor, sub-contractors involved and city agencies (if they wish to attend) to review the different moves that will happen that day.
	Training	The morning of the climb; a safety meeting reviewing the task of each workers involved in the climb must be held and have a sign in sheet signed. Acopy to be kept on file and a copy given to the controlling contractor.
		All workers involved in the climb must have a proof of training (Tower Crane Climbing and Signaling 30 hour course) and copies provided to the controlling contractor.
		A Master Rigger or Tower Rigger must be present on site during the climb of the tower crane.
		Have on site a copy of the manufacturer's climbing procedure and EOR signed and sealed drawings (if required).
		If you are not sure of what exactly you are to do, ask your foreman for clarification or further explanations.
	Overhead protection	Make certain that no other trades are present under or in the adjacent bays of the climbing tower crane.
		No NYLON slings to be used during the tower crane climbing operations.
	Mechanical failure	Have the hydraulic system inspected the day prior the climb for leaks, cracked hoses, fluid levels, engine, etc..

TASK	Hazard	PROTECTION
CLIMBING USING AN INTERNAL CLIMBING SYSTEM	Mechanical failure	Check the communication system with the tower crane operator.
		Have all dogs inspected for free movement and that the locking pin is present and used when required.
	Fall hazards	A full body harness must be worn at all times while working on the work platforms while preparing the tower crane for its climb or while climbing.
		A full body harness and lanyard must be used if the worker has to step outside of the perimeter protection of the work platforms to perform a required task.
	Personel injuries	All Personnel Protective Equipment such as hard hat, glove, safety glasses, work boots, full body harness, etc must be worn when required by OSHA or site rules.
		Keep all body parts inside the perimeter protection of the work platforms while the tower crane or its components are moving.
		All workers are to follow direction from the climb foreman (director) only unless in case of eminent danger.

TASK	HAZARDS	PROTECTION
MATERIAL & EQUIPMENT HOISTING	Struck by	As a load is hoisted, it must be controlled by at least one tag line if the load could make damages to the property or worker while spinning.
		When picking up the slack of the slings to hoist the load, stay clear of the load as it may shift.
		Only one signalman to give the signals to the crane operator.
		When hoisting from curb side, be aware of traffic in the next lane.
		When hoisting from curb side, while hoisting stop adjacent lane traffic until the load is well within the project fence.
		Is the tail swing flagged (hydraulic or crawler cranes) to prevent workers to get struck or caught between counterweights and a hard place.
	Overhead protection	All rigging must be inspected by a competent person at the beginning of each shift.
		Ensure tat the load you are about to hoist has no pieces that could become loose and fall off while being hoisted.
		If your intended load path is over other workers, a warning must be given so all worker can clear the load path. Use of a whistle or horn is recommended.

110 East 42nd Street Suite 1710
New York, NY 10017
United States of America

Phone: (212) 599 – 1603
Fax: (212) 599 – 1615

TASK	Hazard	PROTECTION
MATERIAL & EQUIPMENT HOISTING	Overhead protection	Check the safety latch (keeper) of the hook. It shall be present and in good working condition?
		Check the weight of the piece(s) to be hoisted against the NYC approved load chart of the crane being used..
	General notes	The operator must show his credentials to the site supervisor and rigging foreman.
		Operator to perform his daily inspection of the equipment?
		Hoisting equipment must be set as per the signed and sealed logistic plans.

TASK	HAZARDS	PROTECTION
USING LADDERS	Falls	Always position your ladder in the 4 to 1 ration. 4 feet up 1 foot out.
		Make sure your ladder extends at least 3' above the landing. Rule of thumb is 3 full spaces between rungs.
		A ladder must be tied at the top as a minimum to prevent displacement.
		When someone is climbing a ladder to tie it at the top, a partner must hold the ladder at the bottom until it is secured.
		Keep the access areas (10' radius) at the bottom and top of the ladder clean of material or other tripping hazards.
		Use the 3 point method when going up or down a ladder. Use a rope to bring material up or down.
		Always face the ladder when using it.
		Check ladder on a daily basis for any damaged components such has rungs, cleats at the feet, Stringers, etc...
		Keep ladders free of slippery substance such as mud, oil, snow, etc...
		Do not install a ladder near a doorway or the perimeter of the building.
	Overhead protection	Do not carry material or equipment (tools) in your hand while using the ladder. This will prevent you from using the 3 contact point method.
		Do not hoist material or equipment in the ladder well if someone else is using the ladder.

TASK	HAZARDS	PROTECTION
		Use rope to bring your material or equipment at your level.

DCM ERECTORS INC.

110 East 42nd Street Suite 1710
New York, NY 10017
United States of America

Phone: (212) 599 – 1603
Fax: (212) 599 – 1615

Pre-jump Safety Meeting Sign-in Sheet

Project Name: **WTC - Tower Four**

Project Location: **World Trade Center**

Crane Designation: **Tower Crane #2A**

Meeting held on: **TBA**

TOPICS	DISCUSSED
Scope of work	**Assembly of Tower Crane #2A**
Roles and responsibilities	**Attached description**
Sequence of work	**See sequencing in attached drawings**
Compliance with manufacturer's operations manual.	**Yes**
Inspection of tools	**Rigging and hand tools**
Permits	**N/A**
Date of Assembly	**TBA**
Time of Assembly	**7:00 AM**
Weather forecasts	**To be checked**

110 East 42nd Street Suite 1710
New York, NY 10017
United States of America

Phone: (212) 599 – 1603
Fax: (212) 599 – 1615

	NAMES	SIGNATURE
1	General Contractor Tishman Construction Corporation	
3	Licensed Tower Rigger DCM Erectors, Inc.	
3	Rigging Foremen DCM erectors, Inc.	
4	Crane Safety Coordinator DCM Erectors, Inc.	
5	Site Safety Manager Tishman Construction Corporation	
6	Licensed Crane Operator DCM Erectors, Inc.	
6	Crane Oiler DCM Erectors, Inc.	
	Climbing System Operator DCM Erectors, Inc.	
	Ironworkers DCM Erectors, Inc.	
	Signalman DCM erectors, Inc.	
	Alternates DCM Erectors, Inc.	

SAFETY WHILE ERECTING THE TOWER CRANE

- Only personnel directly involved with the assembly of the tower crane are allowed on the various platforms of the or in the cab of the tower crane.
- All workers are to wear a full body harness and lanyard or retractable with shock absorber at all times during the assembly of the tower crane.
- If a worker has to step outside the handrail system of the various platforms; he must first tie-off to a steel member or the tower crane assembly and then step outside of the hand-rail surrounding the platform.
- All PPE such as safety glasses, hard hat, work boots and others must be worn per site or OSHA requirements.
- Stop all movements and secure crane if wind exceeds 30 mph.
- Be aware of moving parts (pinch points).

NO SMOKING ON SITE (new NYFD rule city wide)

DCM ERECTORS INC.

110 East 42nd Street Suite 1710
New York, NY 10017
United States of America

Phone: (212) 599 – 1603
Fax: (212) 599 – 1615

TOWER CRANE - SAFETY MEETING

Date: _____

Foreman: _____

Project Name: WTC – Tower 4

Project Location: WTC, New York

TOPICS	COMMENTS FROM WORKERS

NAME *(Please Print)*	SIGNATURE

Meeting Held by: _____
(Signature)

_____
(Print Name)

Send copy to: Main Office, and General Contractor

DCM ERECTORS INC.

110 East 42nd Street Suite 1710
New York, NY 10017
United States of America

Phone: (212) 599 – 1603
Fax: (212) 599 – 1615

INFORMATION FOR PRE-COORDINATION MEETING

AGENDA

Crane to be assembled:	**Tower Crane #2A**
Date of Assembly:	**February 09, 2012 (weather permitting)**
Time of Assembly:	**7:00 AM**
Duration:	**Approximately 4 hours**
Climb starting elevation:	**1,091 – 11" at underside of rubella**
Installation end elevation:	**1,119 – 2" at underside of rubella**
Weather forecast:	
Pre Climb safety meeting:	**Day of start of climb at 7:00 AM** *All involved in climb to be present* *Review task of each worker*
Rigging required:	**See installation drawings for rigging.**
Nylon slings:	**NONE**
Tie back or collars:	**Not in this phase**
Tools or equipment required:	**Crane 2A and torque gun**
Safety:	Only those involved to be in tower crane climb No trades to be below crane being climbed. No trades to be on top of adjacent cells in core **Full body harness and lanyard to be used if exposed to fall over 15' as per OSHA Subpart CC** Safety glasses can be removed when verifying plumbness of crane or clearances.

DCM ERECTORS INC.
110 East 42nd Street Suite 1710
New York, NY 10017
United States of America
Phone: (212) 599 – 1603
Fax: (212) 599 – 1615

LIST OF ATTACHMENTS

Attachment A ..... **Climbing Schedule Drawings**

Attachment B ..... **Manufacturer's Climbing Procedure**

Subject Page No.

Climbing System....4-3
Sequence For Assembling The Climbing Frame At The Tower Base....4-6
General Hydraulic Information....4-12
Operating Instructions For The Control Panel....4-12
Sequence of Raising The Climbing Frame From The Tower Base To The Turntable Mounting Base....4-14
Hydraulic System Priming Procedure....4-14
Climbing Procedure (TG1500-1900-2300-2300B)....4-23
Machine Balance Procedure....4-27
Climbing Procedure With Transition Section (TG1500-1900)....4-32
Climbing Procedure With Bogie Transition (TG1500-1900)....4-34
Lowering Procedure (TG1500-1900-2300-2300B)....4-36
Sequence Of Lowering The Climbing Frame From The Turntable Bearing Mounting Base To The Tower Base....4-39
Sequence For Disassembling The Climbing Frame From The Tower Base....4-40
Monorail And Counterweight Disassembly (TG2300-2300B)....4-41

4

Figures Page No.

Fig. 4-1 Climbing System....4-4
Fig. 4-2 Platform Assembly And Dimensions....4-5
Fig. 4-3 Climbing Frame Assembly....4-7
Fig. 4-4 Bottom Climbing Foot....4-8
Fig. 4-5 Lower Climbing System Hydraulics (Prior To Climbing Frame S/N C79-1504)....4-9
Fig. 4-6 Lower Climbing System Hydraulics (Climbing Frame S/N C79-1504 And After)....4-10
Fig. 4-7 Climbing Deflector Rollers....4-11
Fig. 4-8 Control Panel....4-13
Fig. 4-9 Hydraulic Power Unit....4-15
Fig. 4-10 Climbing Cylinder (TG1500-1900)....4-16
Fig. 4-11 Climbing Cylinder (TG2300-2300B)....4-17
Fig. 4-12 Climbing Frame Ready To Be Raised....4-19
Fig. 4-13 Raising Climbing Frame One Tower Section....4-20
Fig. 4-14 Retract Climbing Cylinders....4-21
Fig. 4-15 Raising Climbing Frame To Turntable Bearing Mounting Base....4-22
Fig. 4-16 New Tower Section At 12" (30.48cm) Clearance....4-23
Fig. 4-17 Cradle Hook Block....4-23
Fig. 4-18 Pin Monorail Beam To Turntable Bearing Mount....4-24
Fig. 4-19 Counterweight Latch....4-25
Fig. 4-20 Climbing System Hydraulics (Upper)....4-26
Fig. 4-21 Climb Machine....4-30
Fig. 4-22 Insert Tower And Bolt Tower Section....4-31
Fig. 4-23 Transition Section....4-34
Fig. 4-24 Positioning The Transition Section....4-35
Fig. 4-25 Monorail And Counterweight Disassembly (TG2300-2300B)....4-42

Charts Page No.

Chart A - Climbing System Weights (TG1500-1900)....4-43
Chart B - Climbing System Weights (TG2300-2300B)....4-44
Chart C - Approximate Balance Radii (TG1500)....4-45
Chart D - Approximate Balance Radii (TG1900)....4-45

Notes:

Climbing System (Fig. 4-1)

All climbing tower assemblies must include one or more 40 ft (12.19m) or 13'7-1/2" (3.9m-19cm) tower sections. Contact your distributor or the factory for recommended tower height for your application. Selection and arrangement of the different tower sections must be made according to the following requirements.

(1) Quantity of 40 ft (12.19m) and 13'7-1/2" (3.9m-19cm) sections necessary to achieve the desired tower height.
(2) A minimum of 40 ft (12.19m) of tower is needed to begin climbing. Initial climb can be made from:
   (a) 40 ft (12.19m) section or any 13'7-1/2" (3.9m-19cm) above that.
   (b) Three 13'7-1/2" (3.9m-19cm) sections.
(3) Each tower section must be rotated 180° from the previous one. This ensures that the preassembled ladders and platforms line up properly.

Note: For more specific information on tower assemblies, see Section 2, Tower Erection, in this manual.

All tower assemblies must be supported by a foundation or attached to a supporting structure. Position tower foundations and anchor bolt locations so that the climbing frame platforms will have sufficient clearance from existing or future structures as the climbing frame is raised from ground level to its maximum elevation. See Fig. 4-1. Provide clearance in at least one of the two possible climbing directions for tailswing and for boom lowering during balancing. If using building ties in conjunction with the tower structure, prior planning is essential to ensure proper placement and installation of the ties.

Before climbing, inspect the towers for:
(1) Shipping damage or damage through prior use.
(2) Excessive corrosion.
(3) Fatigue cracks in bracing or main columns.
(4) Bent or missing bracings.
(5) Fatigue cracks at welds.

Repair all damage before climbing. See that all ladders and platforms are properly assembled.

Inspect all climbing gear for shipping damage and to ensure that it is functioning properly.

Before beginning climbing frame assembly, see Fig. 4-2 for proper orientation of the climbing frame panels on towers with 40 ft (12.19m) sections. Ensure that the climbing system is properly installed and that all bolts and fittings are properly tightened.

Have on hand wrenches, torque multipliers and other tools with sufficient strength and capacity to tighten tower bolts. An air supply and pneumatic tools at the tower will help speed the climbing operation. These items should be at the jobsite before starting climbing operations.

Consult the crane capacity chart for machine configurations before assembling a climbing frame to an existing tower. Certain tower heights and boom lengths prohibit long term installation of a climbing frame on the machine.

Safety

WARNING

Keep Out From Between Suspended Loads And Fixed Objects

Keep Out From Beneath Suspended Loads And From Beneath Booms.

Use All Personal Safety Equipment Such As Safety Belts, Lanyards, Etc. As Required By Local, State And Federal Codes - Or Any Safety Equipment Required By Particular Jobsite Conditions.

Know And Observe All Proper Rigging Methods. Weights In This Climbing Procedure Are Heavy And Can Cause Death Or Injury.

The Following Climbing Procedures Are Based On Using A Machine That Is Properly Maintained And In Normal Operating Condition. Use Of Poorly Maintained Equipment Can Be Dangerous.

WARNING

During Climbing Or Lowering Operations, All Personnel Must Be Aware Of The Slow Relative Motion Between Large Structural Parts. Keep Head And Limbs Clear To Avoid Serious Injury.

If At Anytime The Climbing Or Lowering Sequences Cannot Be Completed Due To Improper Functioning Of The Machine Or Climbing System, Return The Machine To Rest On The Tower And Tighten The Connecting Bolts To Their Proper Value.

Personnel Involved In The Climbing Operations Must Read And Understand The Climbing Procedures In This Manual.

To Avoid Personal Injury Or Machine Or Equipment Damage, Place All Blocking On A Firm Support So It Will Not Topple.

Keep Within The Rated Capacity Of All Lifting Cranes And Lifting Equipment. Lift Loads Slowly And Carefully.

4

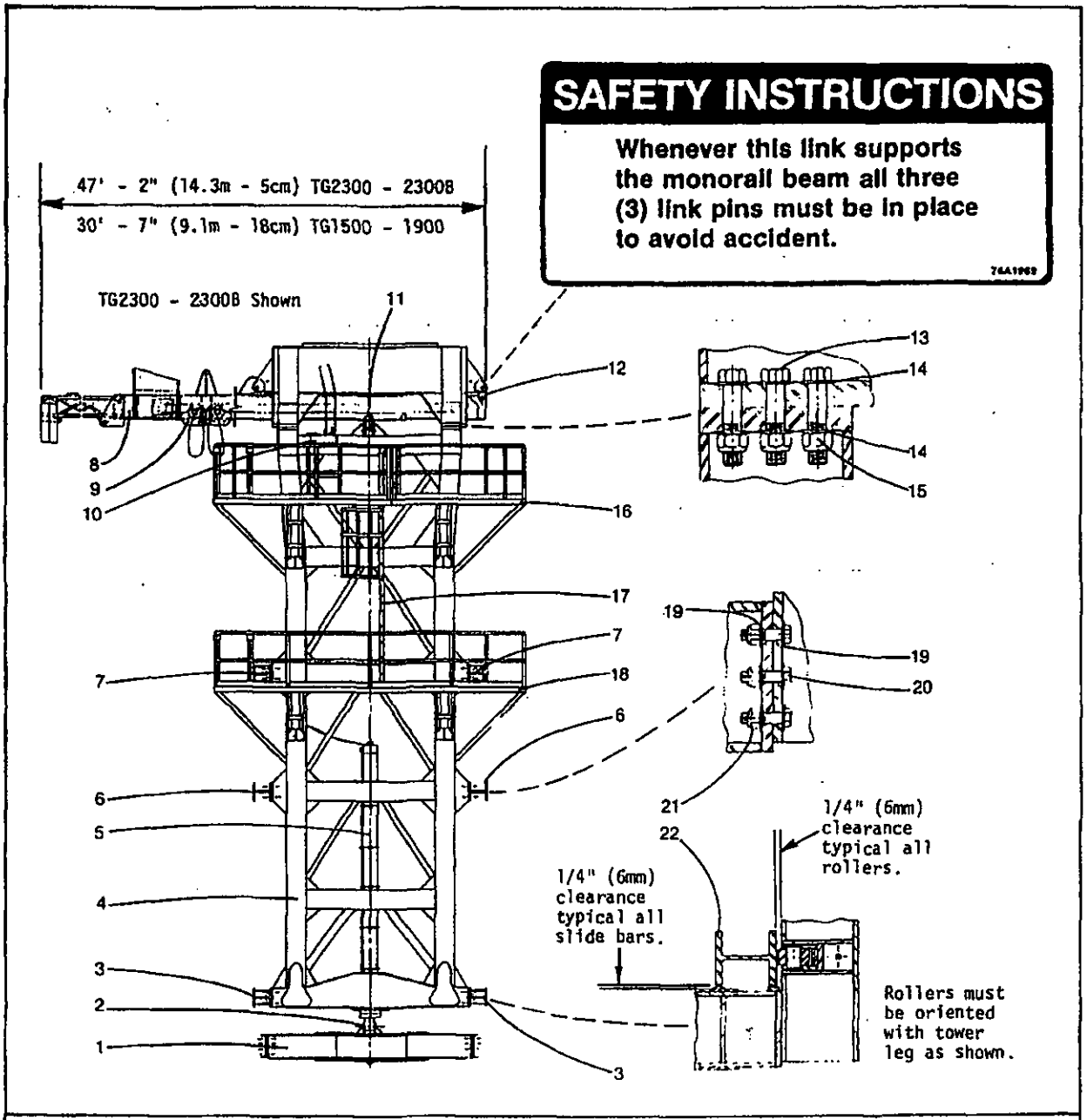

Fig. 4-1 FT419-D,FT420-D
Climbing System

(1) Climbing Frame Base Assembly
(2) Pin
(3) Bottom Roller Beam
(4) Climbing Frame
(5) Climbing Cylinder
(6) Tie Beam
(7) Top Roller Beam
(8) Monorail Beam
(9) Monorail Trolley
(10) Control Panel
(11) Top Climbing Foot
(12) Link
(13) High Strength Bolt (6 Per Connection)
(14) Washer (12 Per Connection)
(15) Locknut (6 Per Connection)
(16) Upper Platform
(17) Ladder
(18) Lower Platform
(19) Washer (12 Per Connection)
(20) Bolt (6 Per Connection)
(21) Locknut (6 Per Connection)
(22) Tower Leg

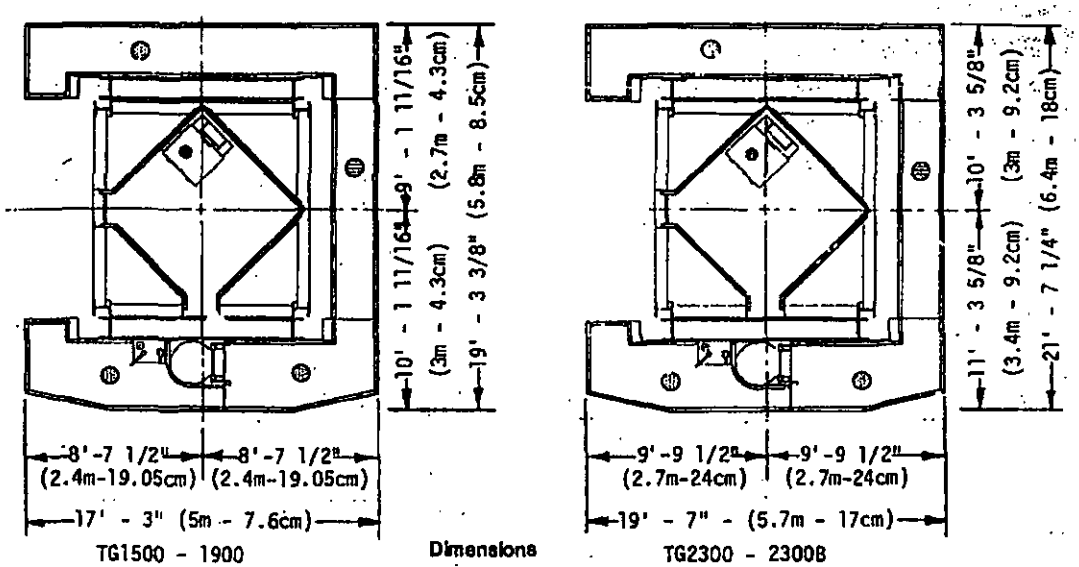

Dimensions

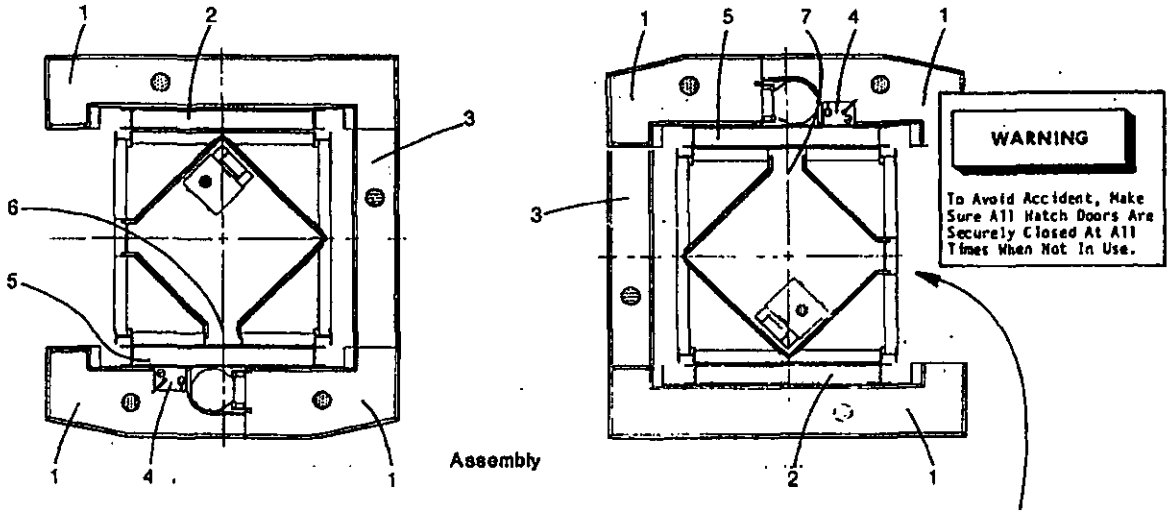

Assembly

The two views show the location of the left hand side panel and platform when it is in its two possible positions. The left hand panel must be located on the same side of the tower as the access opening.

When the initial climb is started from a 40' (12m) tower section, the orientation of the climbing frame side panels and platforms on the tower is dictated by the position of the access opening in the top platform of the tower.

During climbing, towers will be added through this opening. Towers may be added through the opposite side by reversing the location of both end platforms and all applicable hardware.

Fig. 4-2 FT420-D
Platform Assembly And Dimensions

(1) Platform
(2) Right Hand Side Panel
(3) End Platform
(4) Control Panel
(5) Left Hand Side Panel
(6) Access Opening (Position #1)
(7) Access Opening (Position #2)

Sequence For Assembling The Climbing Frame At The Tower Base

(1) Locate starting supports for the bottom climbing feet of the climbing base. The support surfaces must be level with each other and must be a minimum of three inches (76.2mm) above the top surface of the starter pads.

Note: If the initial climb is from a 40' (12.19m) tower section or from three 13'7-1/2" (3.9m-19cm) tower sections, temporary starting supports on each side of the tower must be erected at the foundation. If the initial climb is from higher than 40' (12.19m) the horizontal angle bracing in the tower, at its strongest point where the diagonals come together, will function as the starting supports.

CAUTION

The Temporary Starting Supports Must Be Of Sufficient Strength And Design To Support The Entire Weight Of The Climbing System. See Charts A And B For Climbing Frame Weights. If The Initial Climb Is From A 40'(12.19m) Tower Section Or From Three 13'7-1/2" (3.9m-19cm) Tower Sections, The Supports Must Also Carry The Total Machine Weight.

(2) Attach the two base cylinder beams to the two tie beams at the tower base. See Fig. 4-3. See that the base is properly oriented on the tower. Rotate both climbing feet into their "climbing position" and rest them on the starting supports. See Fig. 4-4. Brace the climbing base as necessary to minimize any rocking motion during assembly.

(3) Pin the left hand climbing frame side panel to the climbing base. See Fig. 4-3. The left hand side panel must include the following items securely attached.
   (a) Climbing cylinder (primed with oil).
   (b) Platforms and platform braces.
   (c) Ladder.
   (d) Control panel assembly.
   (e) Platform end guards (one at each platform level).
   (f) Hydraulic lines and fittings.

Using tie downs as necessary, securely fasten the top of the side panel to the tower to prevent falling or rocking or any excessive motion of the side panel.

CAUTION

The Entire Climbing System Weight Is Transmitted Through The Cylinder Rods And To The Base Climbing Feet.

Note: Access to the tower from the climbing frame platforms is through the left hand side panel. See Fig.4-2.

(4) Pin the right hand side panel to the cylinder base. See Fig. 4-3. The right hand side panel must include the following items securely attached.
   (a) Climbing cylinder (primed with oil).
   (b) Platforms and platform braces.
   (c) Platform end guards (one at each platform level).
   (d) Hydraulic lines and fittings.

Using tie downs as necessary, securely fasten the top of the side panel to the tower to prevent falling or rocking or any excessive motion of the side panel.

CAUTION

The Entire Climbing System Weight Is Transmitted Through the Cylinder Rods To The Base Climbing Feet.

(5) Using six capscrews per connection, attach two roller beam assemblies between the bottom end pads of the side panels. See Fig. 4-3. Do not torque capscrews at this time.

Note: The roller beam with hydraulic lines attached belongs at the top end pads.

(6) Using six capscrews per connection, attach the two tie beams between the middle end pads of the side panels. See Fig. 4-3. Do not torque capscrews at this time.

(7) Using six capscrews per connection, attach the remaining two roller beam assemblies (with hydraulics) between the top end pads of the side panels. Do not torque capscrews at this time. Assemble the roller beam with hydraulic lines as shown in Fig. 4-5 and 4-6.

Note: Check to see that there is a 9'9-1/2" (2.9m) dimension between rollers when the beams are assembled to the side panels. If necessary, shim with part number 76A593 1/16" (2mm) shims to obtain the nearest 11/16" (17mm).

(8) When all roller beams and tie beams set flat against the climbing frame, torque the capscrews. Lubricate with SAE 30W oil and tighten to 850 ft/lb (1136 N·m).

(9) Remove the climbing frame tie downs used in steps (3) and (4).

(10) Using six capscrews each, bolt in place the rear platforms of both the upper and lower levels. See Fig. 4-2.

(11) Connect all required hydraulic lines. See Figs. 4-5 and 4-6.

(12) If the machine will be climbing with three or four parts of main hoist line, attach the climbing deflector roller to the bottom side of the boom top section. See Fig. 4-7.

For models TG1500-1900, if the main hoist is reeved with three or four parts of line, the climbing boom deflector roller (see Fig. 4-7) must be installed on the bottom of the boom top section. Within the limits of the capacity chart, the roller may remain on the boom for normal machine operation with one, three, or four parts of line. For two parts of line, the roller must be removed if the machine will be operating near minimum radius. Removing the roller will avoid damage to the main hoist rope or to roller.

For the model 23008 with the open throat boom, the climbing deflector

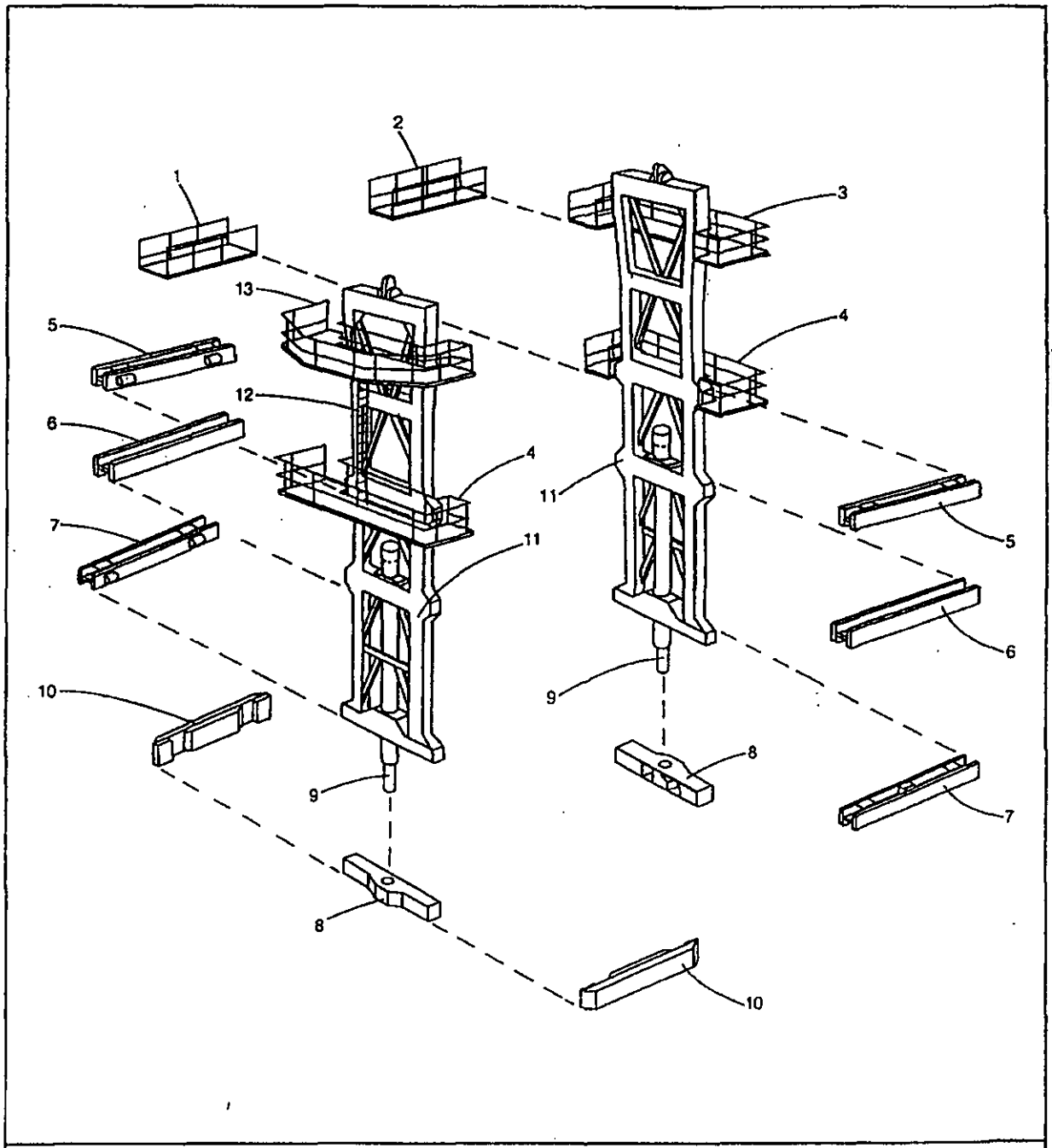

Fig. 4-3 FT571-B
Climbing Frame Assembly

(1) End Platform (Lower)
(2) End Platform (Upper)
(3) Upper Platform
(4) Lower Platform
(5) Top Roller Beam
(6) Tie Beam.
(7) Bottom Roller Beam
(8) Climbing Frame Base Assembly
(9) Climbing Cylinder
(10) Base Tie Beam
(11) Climbing Frame
(12) Ladder
(13) Upper Platform W/Control Panel

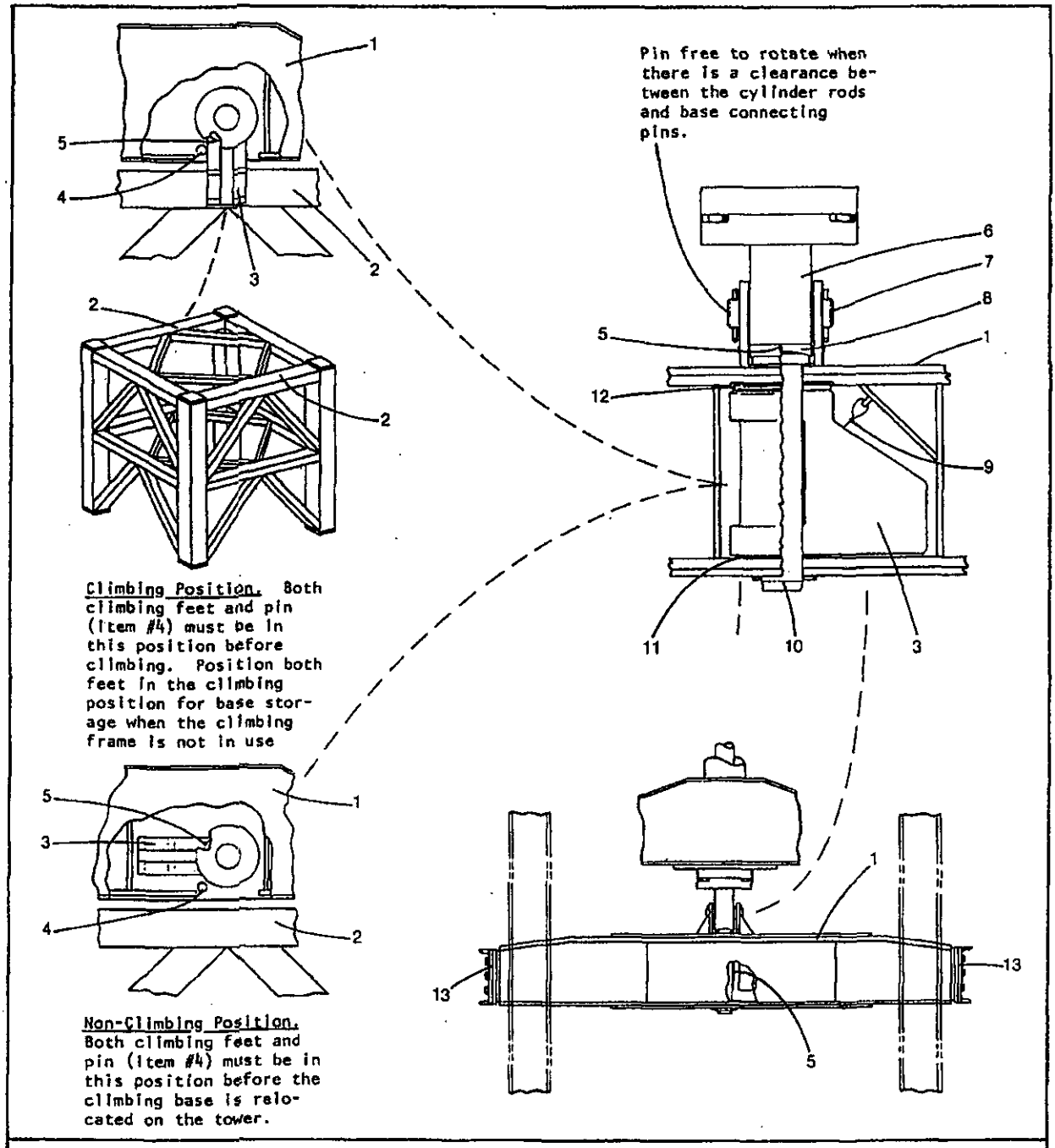

Fig. 4-4 FT315-D,FT390-B

Bottom Climbing Foot

(1) Base Cylinder Beams (2)
(2) Support Surface
(3) Bottom Climbing Foot
(4) Stop Pin
(5) Grease Fitting
(6) Climbing Cylinder
(7) Pin and Cotter Pin
(8) Aligning Disc
(9) Wire Rope and Wire Rope Clip
(10) Pin and Cotter Pin
(11) Washers
(12) Spacer
(13) Base Tie Beams (2)

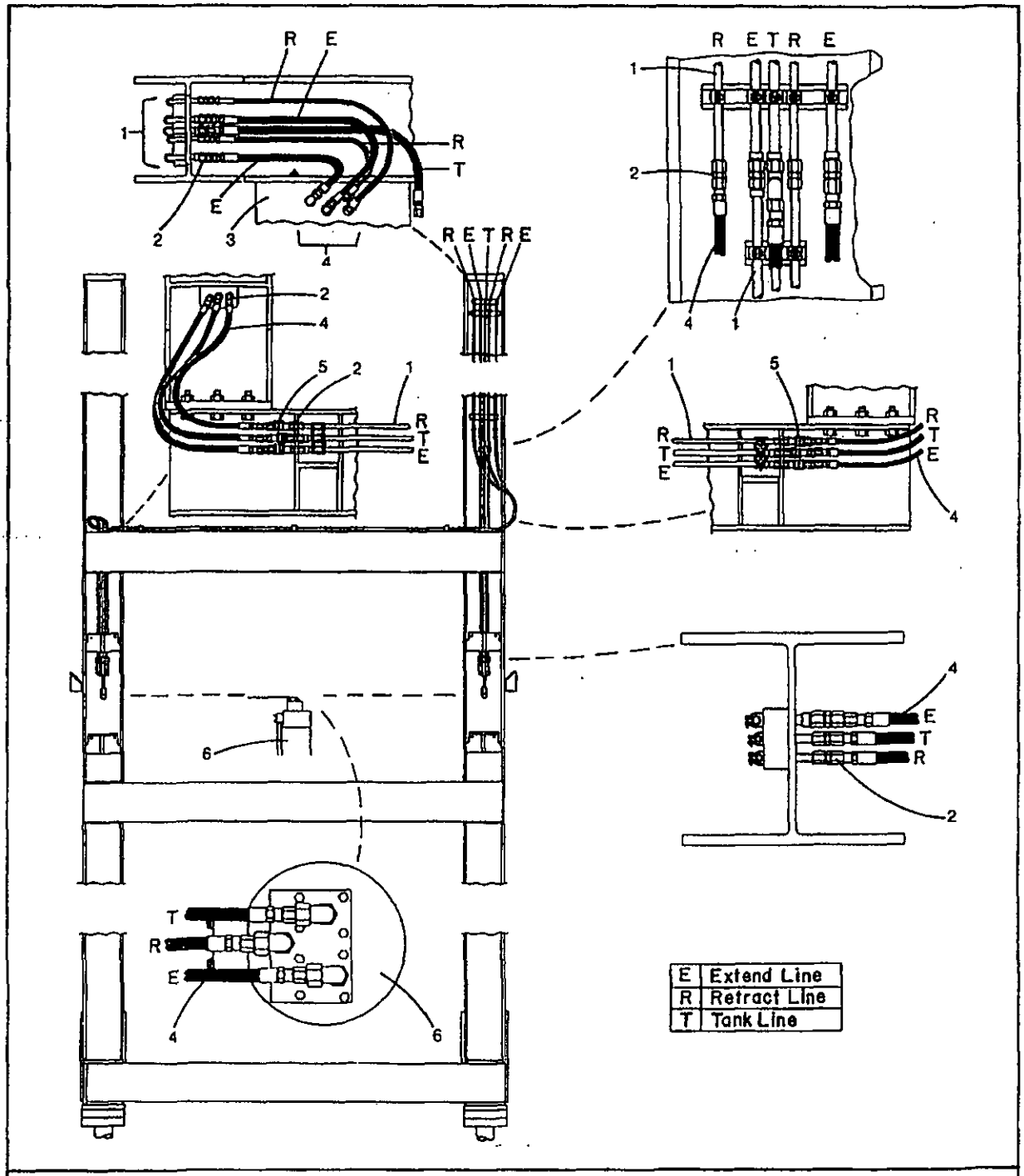

Fig. 4-5 FT348-D

Lower Climbing System Hydraulics (Prior To Climbing Frame S/N C79-1504)

(1) Tube Assembly
(2) Connector
(3) Control Panel
(4) Hose Assembly
(5) Quick Disconnect And Dust Cap
(6) Climbing Cylinder

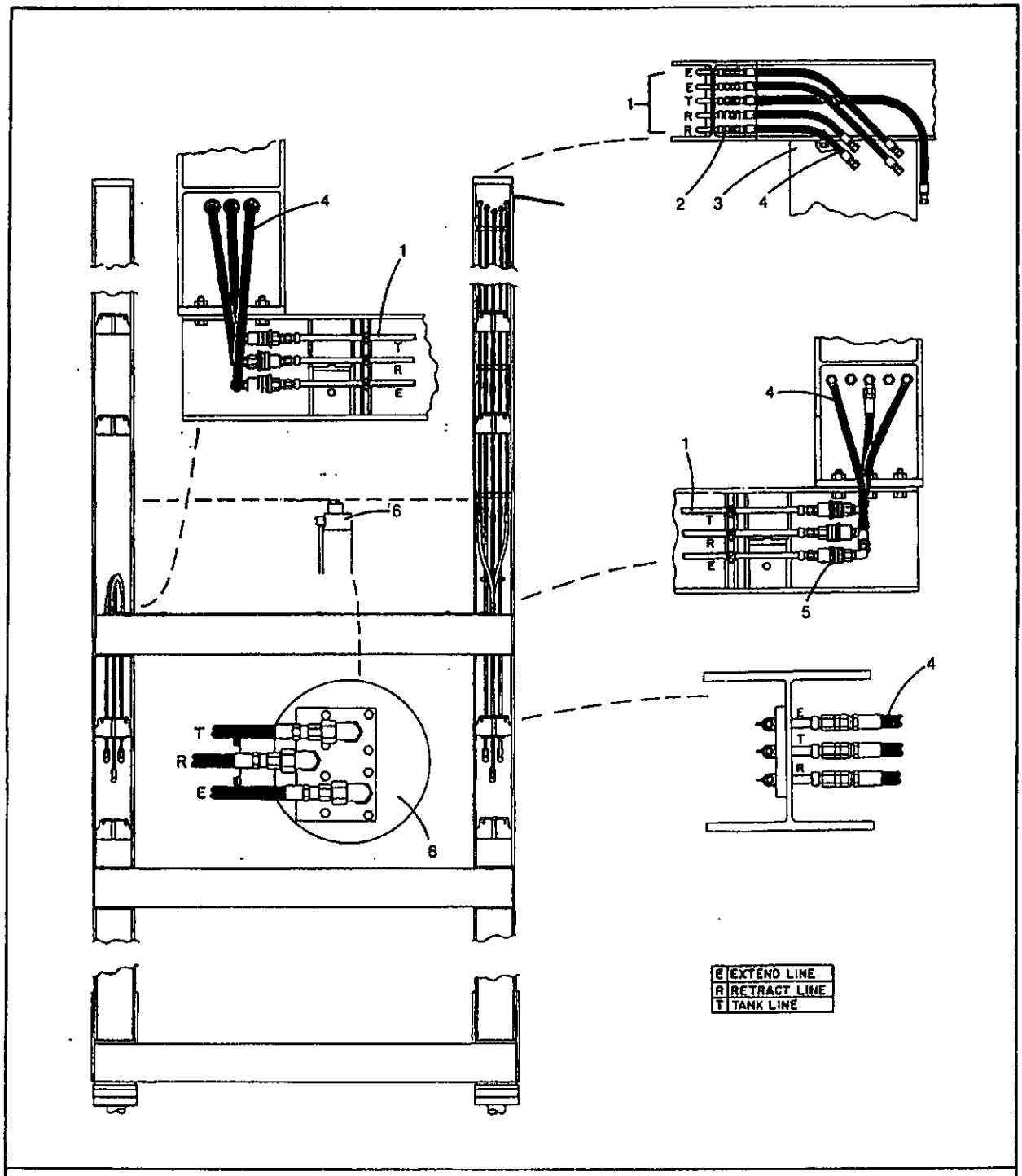

Fig. 4-6 FT466-D

Lower Climbing System Hydraulics (Climbing Frame S/N C79-1504 And After)

(1) Tube Assembly
(2) Connector
(3) Control Panel
(4) Hose Assembly
(5) Quick Disconnect And Dust Cap
(6) Climbing Cylinder

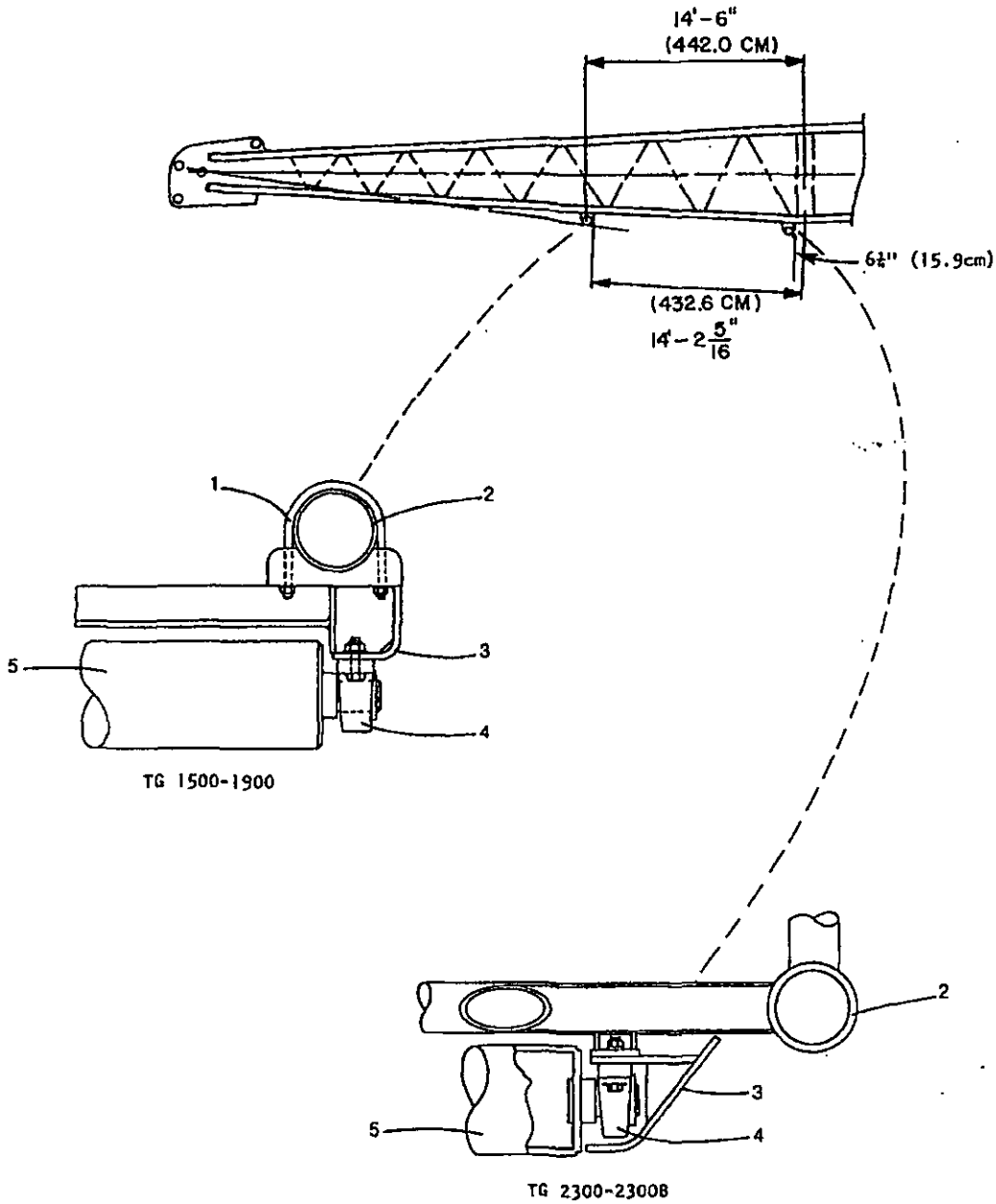

Fig. 4-7 FT246-B
Climbing Deflector Rollers
(1) U-Bolt
(2) Top Boom Section
(3) Bracket
(4) Pillow Block
(5) Deflector Roller

roller must be installed on the bottom of the boom top section for two or more parts of line. See Fig. 4-7. The roller may remain installed for normal machine operation. The climbing deflector roller is not required on the models 2300 or 23008 with four parts of line maximum.

CAUTION

During Normal Machine Operation, Take Care To Maintain Clearance Between The Roller And The Machine Hook Blocks To Avoid Damaging The Roller.

General Hydraulic Information

When attaching the hydraulic lines from either the machine upper or the hydraulic power unit to the control panel, the hydraulic reservoir on either the machine upper or hydraulic power unit must be carefully observed for overfill. Overfilling can occur during the cylinder retract mode. Carefully observe the relavant oil level as it increases when the cylinders retract fully the first time. If the oil level begins increasing over the full mark, stop the cylinders and remove enough oil to allow the cylinders to fully retract.

Operating Instructions For The Climbing Control Panel

The following steps describe the operation of the climbing control panel. See Fig. 4-8.

(1) Moving the directional control lever away from the tower will extend the cylinders to either raise the crane or lower the climbing base.
(2) Moving the directional control toward the tower will retract the cylinders to either lower the crane or raise the climbing base.
(3) The divertor valve is used when unequal rates of travel in the two cylinders cause the base or frame to bind on the tower. It is used in conjunction with the directional control valve. In the spring-centered position, the divertor valve allows equal flow to each cylinder.

Note: During normal climbing operations, there will be contact between the slide bars and the tower, or between the rollers and the tower. This can be ignored unless binding actually occurs.

(4) Moving the divertor control valve lever clockwise until it contacts the mechanical stop, and holding in this position, diverts all the oil flow to the cylinder beneath the control panel and stops the far cylinder.
(5) Moving the divertor valve counter-clockwise until it contacts the mechanical stop, and holding in this position, diverts all the oil flow to the cylinder on the far side and stops the cylinder beneath the control panel.

CAUTION

Do Not Attempt To Adjust The Counterbalance Valve On The Underside Of The Control Panel. This Valve Is Preset At The Factory And Cannot Be Field Adjusted.

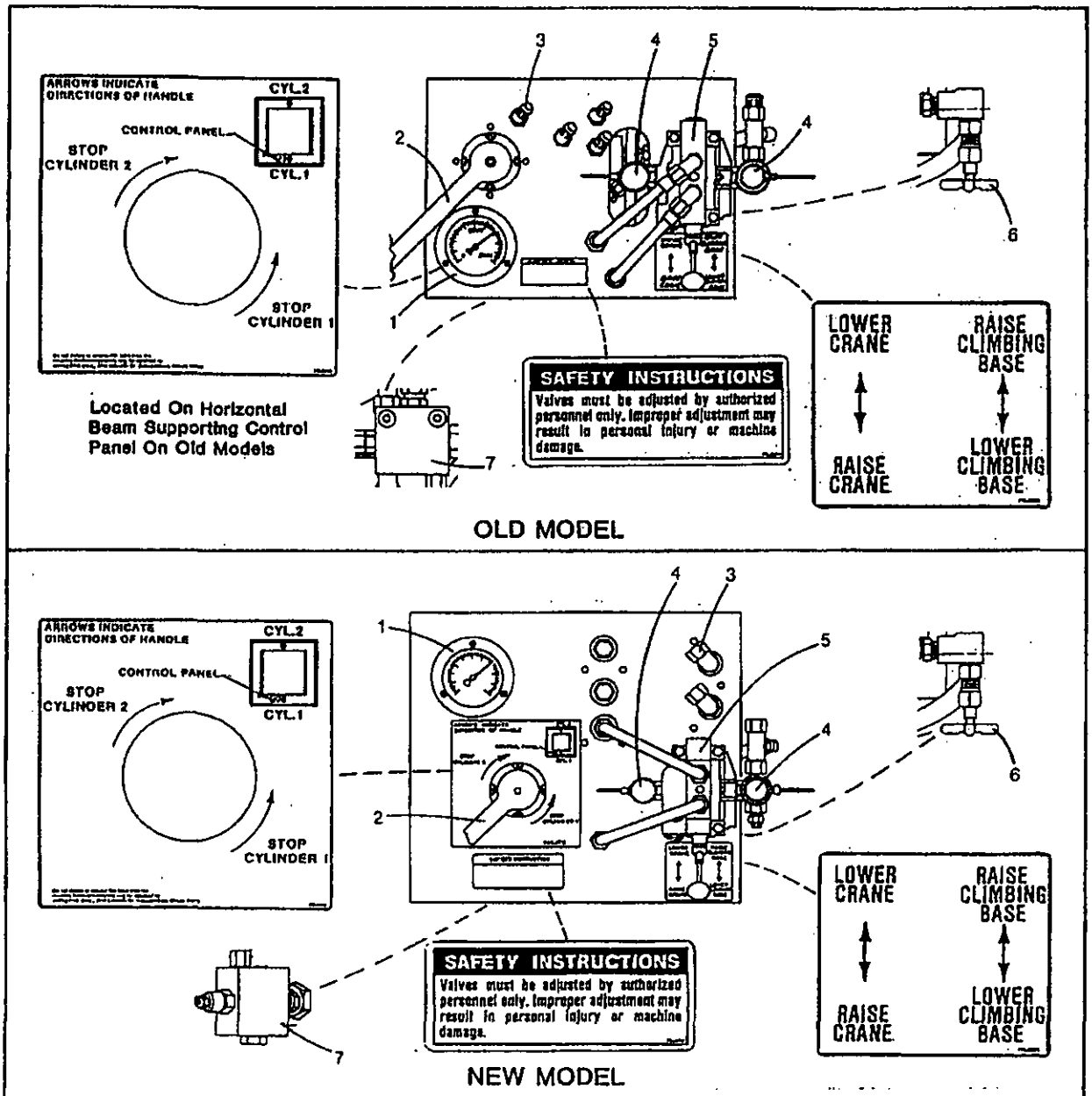

Fig. 4-8 FT552-A,FT443-B,FT554-A

Control Panel *

(1) Pressure Gauge
(2) Divertor Control Valve
(3) Connections From Lower Hydraulics
(4) Connections For Hydraulic Power Unit When Raising Or Lowering Climbing Frame
(4) Connections For Upper Hydraulics When Climbing Or Lowering Machine
(5) Directional Control Valve
(6) Needle Valve
(7) Counterbalance Valve

* Machines In The Field Can Have Old Or New Model Control Panels, Depending Upon Date Of Manufacture.

Sequence Of Raising The Climbing Frame From The Tower Base To The Turntable Bearing Mounting Base

Assemble the climbing system as described in the preceding assembly sequence. The bottom climbing feet must be resting on the supporting surfaces.

CAUTION

The Supporting Surfaces Must Support The Entire Weight Of The Climbing System.

To raise the climbing frame, proceed as follows:

(1) Assemble the hydraulic power unit on the top climbing frame platform and connect the electric motor. Connect the hydraulic lines from the control panel to the hydraulic power unit. See Fig. 4-9. To place the hydraulic power unit in operating condition, proceed as follows:
   (a) Remove all packing and examine the unit for damage.
   (b) Wire the unit for power following the standard NEMA codes for 7-1/2 HP electric motor, 230/460 volts, 3 phase, 60 Hz.
   (c) Using pre-filtered, approved hydraulic oil (see Section 5 of this manual for oil specifications) fill the reservoir with approximately 75 gallons (285 liters) of oil. More oil may be required later. The power unit has a low level oil switch that shuts down the unit if the oil level becomes too low for operation.
   (d) Loosen the locknut on the pressure compensator adjustment, then turn it outward until spring tension is released. See Fig. 4-9.
   (e) Using the longer of the two hoses connecting the power unit to the control panel, connect the pressure and return ports on the power unit together. See Fig. 4-9.
   (f) One person should face the reservoir from the pump end while a second person jogs the "On/Off" switch once. The person facing the pump should compare the direction of shaft rotation with the arrow marked on the pump housing. If the shaft rotation is not in the direction of the arrow, immediately stop the power unit and reverse the electrical connection. If the direction of rotation is correct, jog the switch a second time, then start the sytem and let the power unit run for 15 minutes.
   (g) Shut down the power unit and disconnect the hose.
   (h) Start the power unit and observe the pressure gauge. Turn the pressure compensator adjustment in until the pressure gauge reads 1300 PSI (8964 kPa) for the TG1500-1900 and 1800 PSI (12411 kPa) for the TG2300 and 2300B. Tighten the locknut on the adjustment to hold this setting. The unit is now ready for operation.

(2) Follow the hydraulic system priming procedure below to ensure that all hydraulic lines are filled with oil and the entire hydraulic system is free of air. The climbing frame must be completely assembled and the hydraulic reservoir must be full of oil at the start of the procedure. The oil level should be observed during the priming procedure and the reservoir should be refilled whenever the oil level drops to the bottom of the sight level gauge.

Hydraulic System Priming Procedure: Performing this procedure requires a minimum of two people. If more than two people are available, it is possible to bleed both cylinder lines at the same time.

(a) Start the machine or powerunit and run at the recommended RPM. The following steps (b) through (d) are identical for both cylinders. Each side can be done either independently or simultaneously, depending on the available manpower.
(b) Examine the manifold block located on the top of the cylinder to locate the extend (EXT) and retract (RET) ports. The port identification is stamped in the top of the block beside the respective port. See Figs. 4-10 and 4-11.
(c) Loosen the hose connection on the (RET) port one half turn. Observe the loosened connection while slightly moving the directional control valve lever in the retract direction. Once all the air is discharged from the line, retighten the fitting.
(d) Loosen the hose connection on the (EXT) port one half turn. Observe the loosened connection while slightly moving the directional control valve lever in the extend direction. Once all the air is discharged from the line, retighten the fitting.
(e) Locate the counterbalance valve on the control panel. See Fig. 4-8. It is mounted on the vertical side of the control panel located away from the tower. Loosen the hose connection on the bottom of the counterbalance valve one half turn. Observe the loosened connection while slightly moving the directional control valve lever in the retract direction. Once all the air is discharged from the line, retighten the fitting.

(3) The top climbing feet must be assembled to the climbing frame in their stowed position as shown in Fig. 4-10.

(4) To check the positive lock characteristics of the holding valves, perform the following drift test:
   (a) Extend the cylinder appoximately six inches (15.24 cm) and stop.
   (b) Observe the climbing frame for downward drift. During a period of 15 minutes little or no drift should occur.

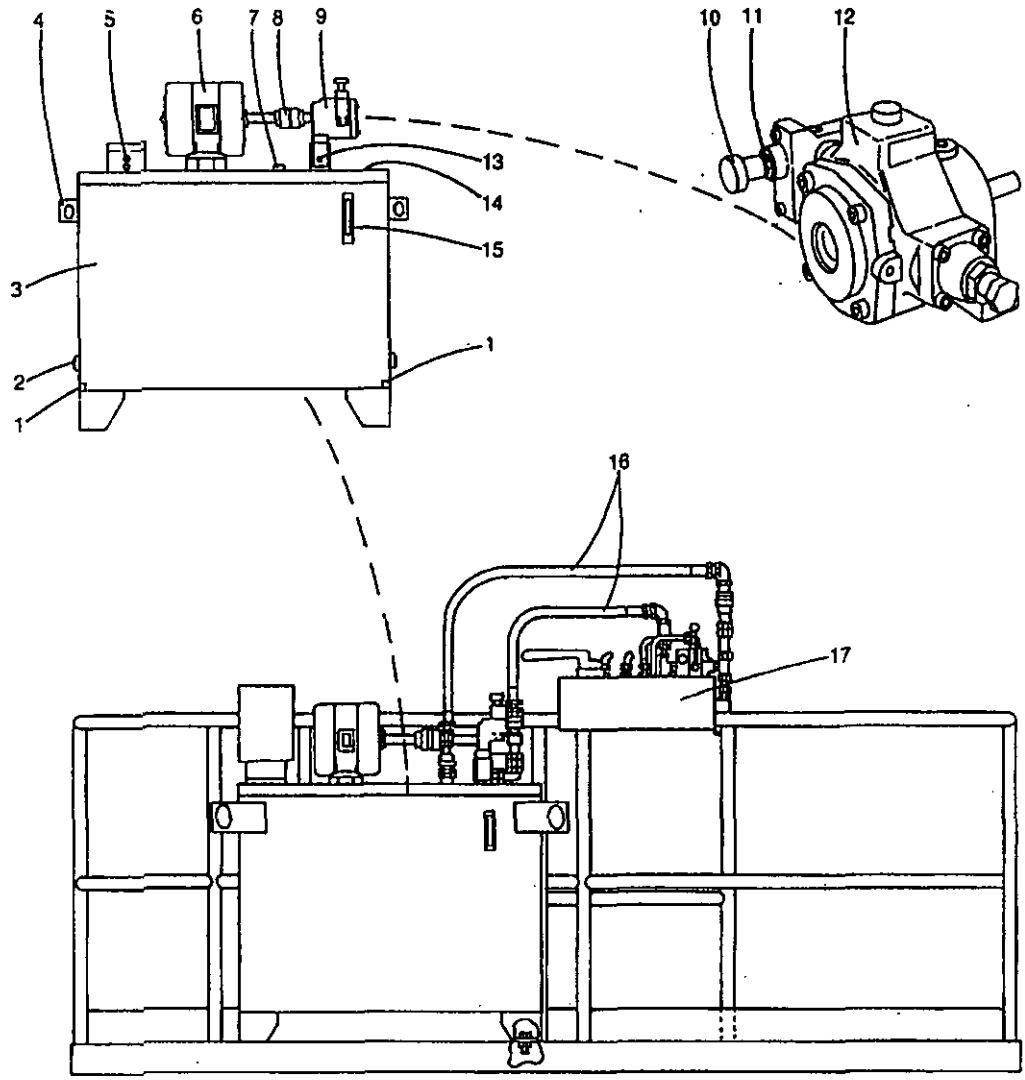

Fig. 4-9 FT431-A,FT433-C

Hydraulic Power Unit

(1) Drain Reservoir (Both Ends)
(2) Return Oil Connection
(3) Hydraulic Power Unit
(4) Lifting Lug
(5) On/Off Switch
(6) Electric Motor
(7) 3/4 NPT Return Connection
(8) Flexible Coupling
(9) Pressure Gauge
(10) Pressure Compensator Adjusting Knob
(11) Locknut
(12) Pump (Pressure Compensator)
(13) 1/2 NPT Pressure Compensation
(14) Fill Port
(15) Sight Gauge
(16) Hose Assembly
(17) Control Panel

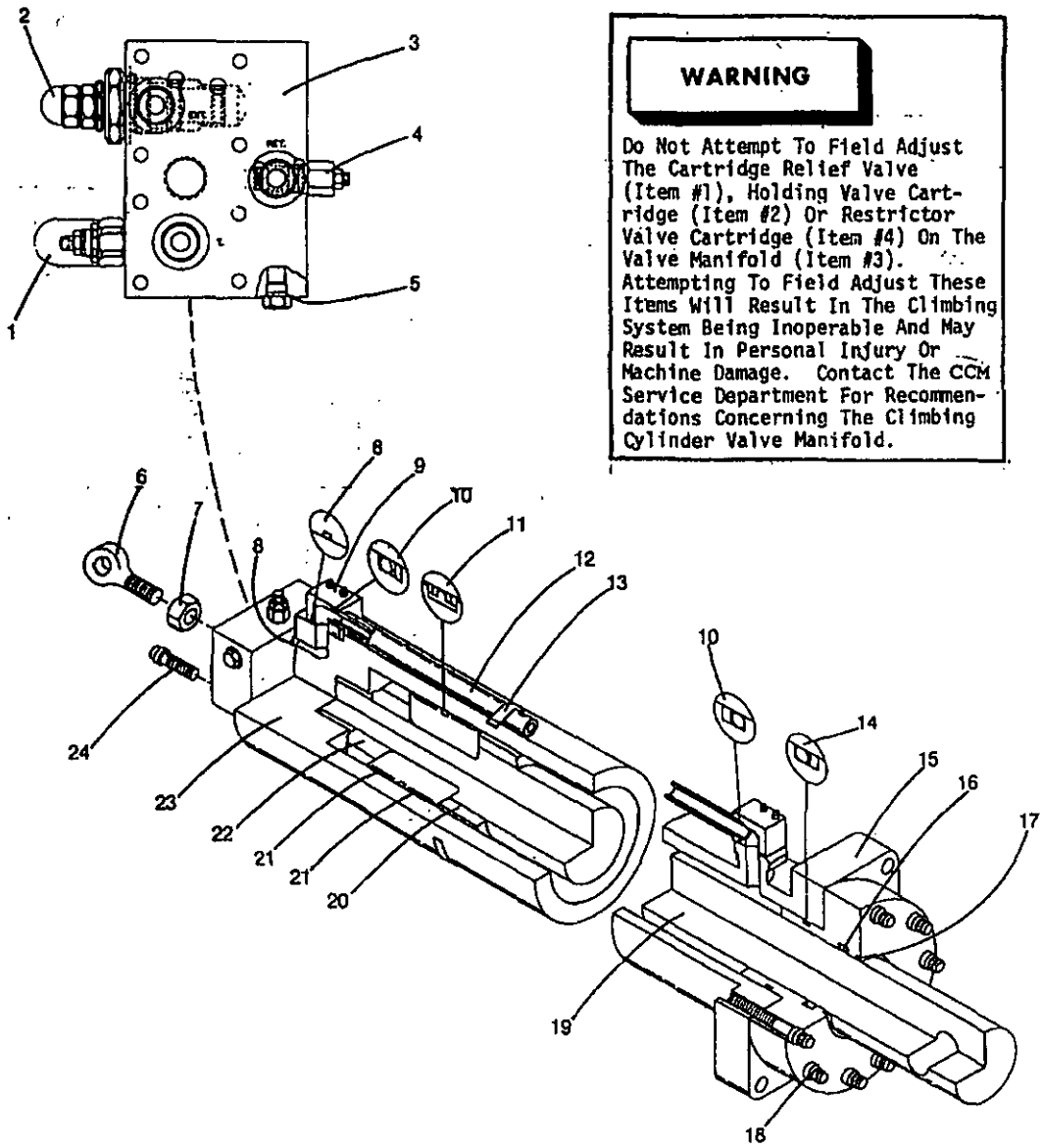

WARNING

Do Not Attempt To Field Adjust The Cartridge Relief Valve (Item #1), Holding Valve Cartridge (Item #2) Or Restrictor Valve Cartridge (Item #4) On The Valve Manifold (Item #3). Attempting To Field Adjust These Items Will Result In The Climbing System Being Inoperable And May Result In Personal Injury Or Machine Damage. Contact The CCM Service Department For Recommendations Concerning The Climbing Cylinder Valve Manifold.

Fig. 4-10 FT401-D,FT394-C
Climbing Cylinder (TG1500-1900)

(1) Cartridge Relief Valve
(2) Holding Valve Cartridge
(3) Manifold Block
(4) Restrictor Valve Cartridge
(5) O-Ring And O-Ring Plug
(6) Eye Bolt
(7) Jam Nut
(8) O-Ring
(9) Port Block
(10) O-Ring And Backup Ring
(11) T-Ring Piston Seal
(12) Tube
(13) Clamp
(14) O-Ring And Backup Washer
(15) Gland
(16) U-Cup Rod Seal
(17) Rod Wiper
(18) Locking Capscrew
(19) Rod
(20) Spacer
(21) Wear Ring
(22) Locknut
(23) Cylinder Body
(24) Capscrew

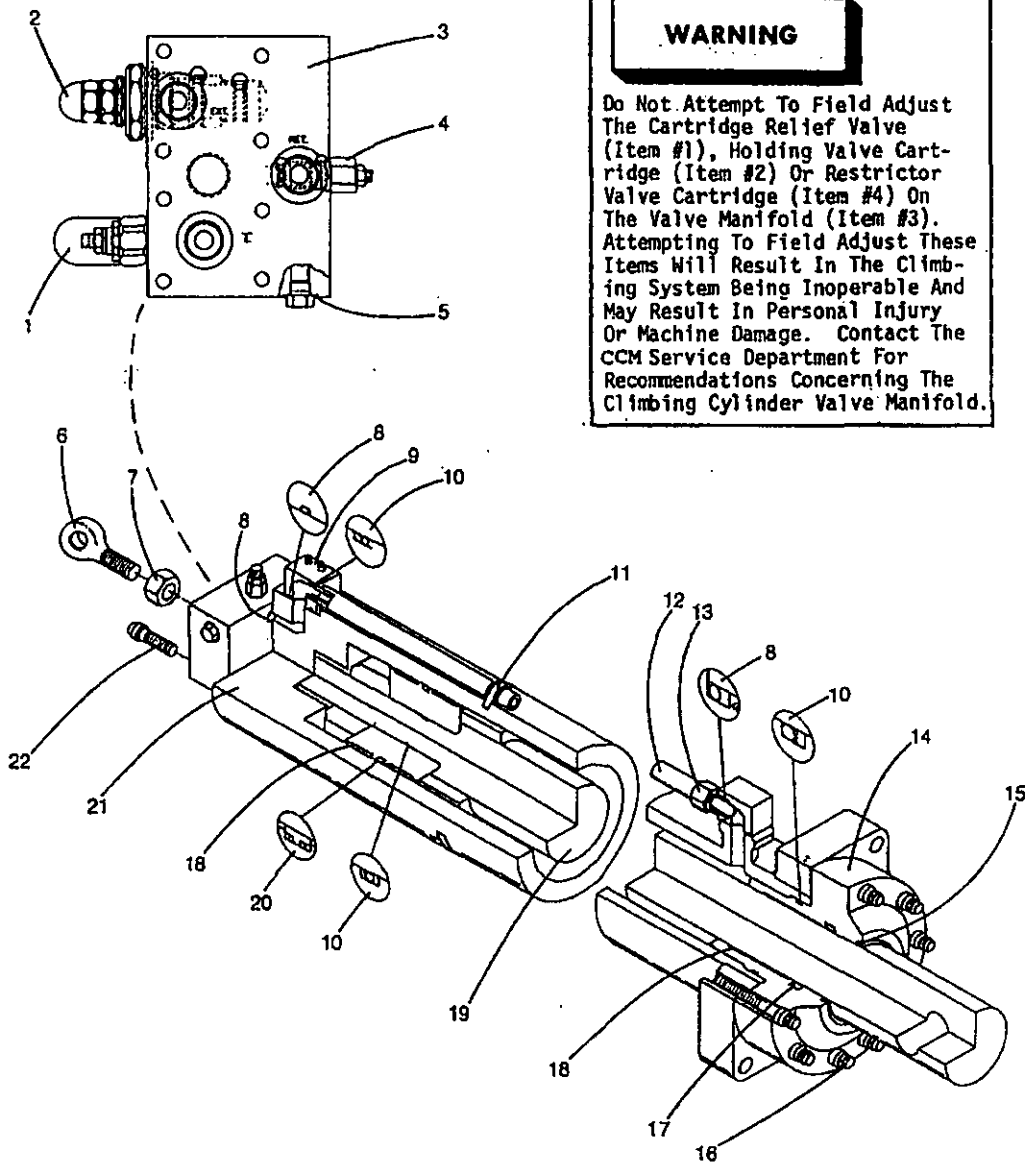

WARNING

Do Not Attempt To Field Adjust The Cartridge Relief Valve (Item #1), Holding Valve Cartridge (Item #2) Or Restrictor Valve Cartridge (Item #4) On The Valve Manifold (Item #3). Attempting To Field Adjust These Items Will Result In The Climbing System Being Inoperable And May Result In Personal Injury Or Machine Damage. Contact The CCM Service Department For Recommendations Concerning The Climbing Cylinder Valve Manifold.

Fig. 4-11 FT402-D,FT394-C

Climbing Cylinder (TG2300-2300B)

(1) Cartridge Relief Valve
(2) Holding Valve Cartridge
(3) Valve Manifold
(4) Restrictor Valve Cartridge
(5) O-Ring And O-Ring Plug
(6) Eye Bolt
(7) Jam Nut
(8) O-Ring
(9) Port Block
(10) O-Ring And Backup Ring
(11) Clamp
(12) Feeder Tube
(13) Adaptor
(14) Gland
(15) Rod Wiper
(16) Locking Capscrew
(17) U-Cup Rod Seal
(18) Wear Ring
(19) Rod
(20) T-Ring Piston Seal
(21) Cylinder Body
(22) Capscrew

CAUTION

Be Alert For Any Drifting, Inability To Stop, Shaking Of The Climbing Frame Or Chattering From The Valves. If The Climbing System Does Not Operate Properly, Contact Your Distributor Or The Factory.

(5) Before making the actual climb, check the complete system for proper operation by raising and lowering the climbing frame approximately two feet (61cm). First attempt to lower the climbing frame three inches (8cm) as slowly as possible by slightly moving the directional control valve lever to the cylinder retract position. Repeat the lowering first at one half speed for one foot (30.48cm), then at full speed for the remaining distance.

WARNING

During Climbing Or Lowering Operations, All Personnel Must Be Aware Of The Slow Relative Motion Between Large Structure Parts. Keep Head And Limbs Clear To Avoid Serious Injury.

(6) With both the top climbing feet in their stowed position (see Figs. 4-12 and 4-13), extend the climbing cylinders approximately 14 ft. (4m). When the top feet can be rotated over the second horizontal tower angle, at its strongest point where the diagonals come together, pin the feet in their working position (see Fig. 4-14) for extending or retracting the base assembly.

CAUTION

If At Anytime When Extending The Climbing Cylinders The Side Panel Side Bars Begin Binding, Correct With The Divertor Valve Before Continuing.

(7) After the top feet are properly pinned, retract the climbing cylinders. Lower the top feet to rest on the horizontal tower angle to support the weight of the frame on the top feet. Continue retracting the cylinders until the bottom climbing feet can be rotated.

(8) Rotate the bottom feet to their non-climbing position as shown in Fig. 4-14. Install the stop pins and retract the climbing cylinders approximately 14 feet 14m). When the bottom feet can be rotated over the second horizontal tower angle, install the stop pins with the feet in their climbing position as shown in Fig. 4-12.

(9) Extend the climbing cylinders, resting the weight of the climbing frame on the bottom climbing feet and raising the top feet off the horizontal tower angle. When the top feet can be rotated, pin them in their stowed position.

CAUTION

At All Times During Extending Or Retracting The Climbing Cylinders, The Appropriate Climbing Feet Must Be Properly Assembled And Resting Flat On Top Of The Correct Horizontal Tower Angle.

(10) Repeat steps (6) through (9) until the climbing frame reaches the turntable bearing mounting base (Fig. 4-15).

(11) Using the provided drift pins to align the bolt holes, extend the climbing cylinders until the top climbing frame panels contact the bottom of the turntable bearing mounting base. Lubricate with SAE 30W oil and install the required bolts and tighten to 3000 ± 500 ft/lb (4008 ± 668 N·m).

CAUTION

If At Any Time When Retracting The Climbing Cylinders The Climbing Base Slide Bars Begin Binding Correct With The Divertor Valve Before Continuing.

(12) Retract the climbing cylinders until the bottom climbing feet can be rotated to their nonclimbing position. Install the stop pins. Continue retracting the cylinders until the climbing feet can be rotated over the second horizontal tower angle (approximately 14 feet [4m]). Rotate the bottom climbing feet to their climbing position and install stop pins. Extend the climbing cylinders until the weight of the climbing base is supported by the bottom climbing feet. Extend the cylinders until there is a clearance between the cylinder rods and the base connecting pins. See Fig. 4-4.

(13) Shut down the electrical power to the hydraulic power unit and disconnect the hydraulic lines to the control panel.

(14) After the electrical supply has been disconnected, remove the power unit from the climbing frame platform for weight reduction.

(15) The top climbing feet may remain in their stowed position on the side panels.

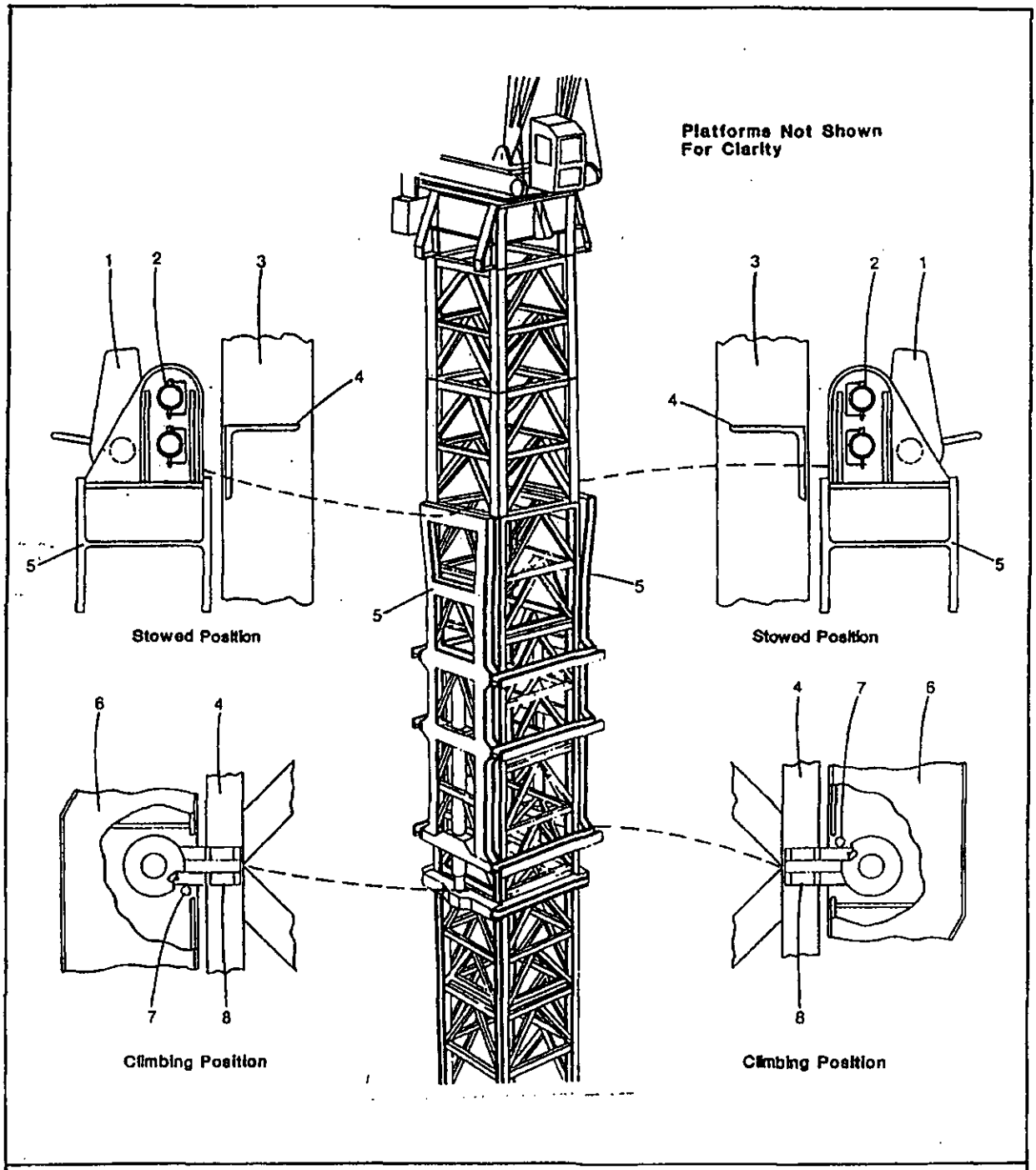

Fig. 4-12 FT579-C
Climbing Frame Ready To Be Raised

(1) Top Climbing Feet
(2) Lockpin (2 Per Foot)
(3) Tower Leg
(4) Second Horizontal Tower Angle
(5) Climbing Frame Side Panel
(6) Base Assembly
(7) Stop Pin
(8) Bottom Climbing Feet

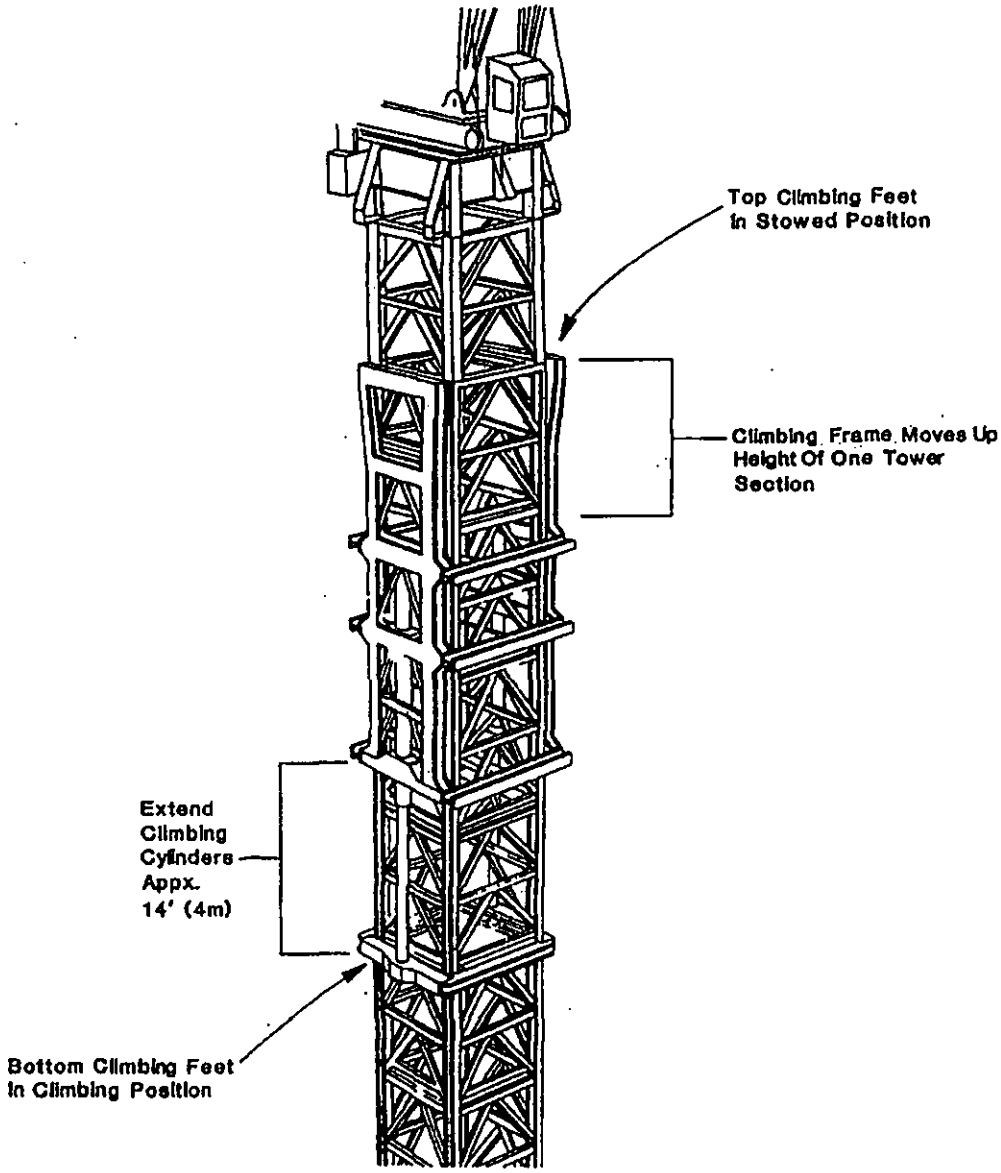

Fig. 4-13
Raising Climbing Frame One Tower Section

FT580-C

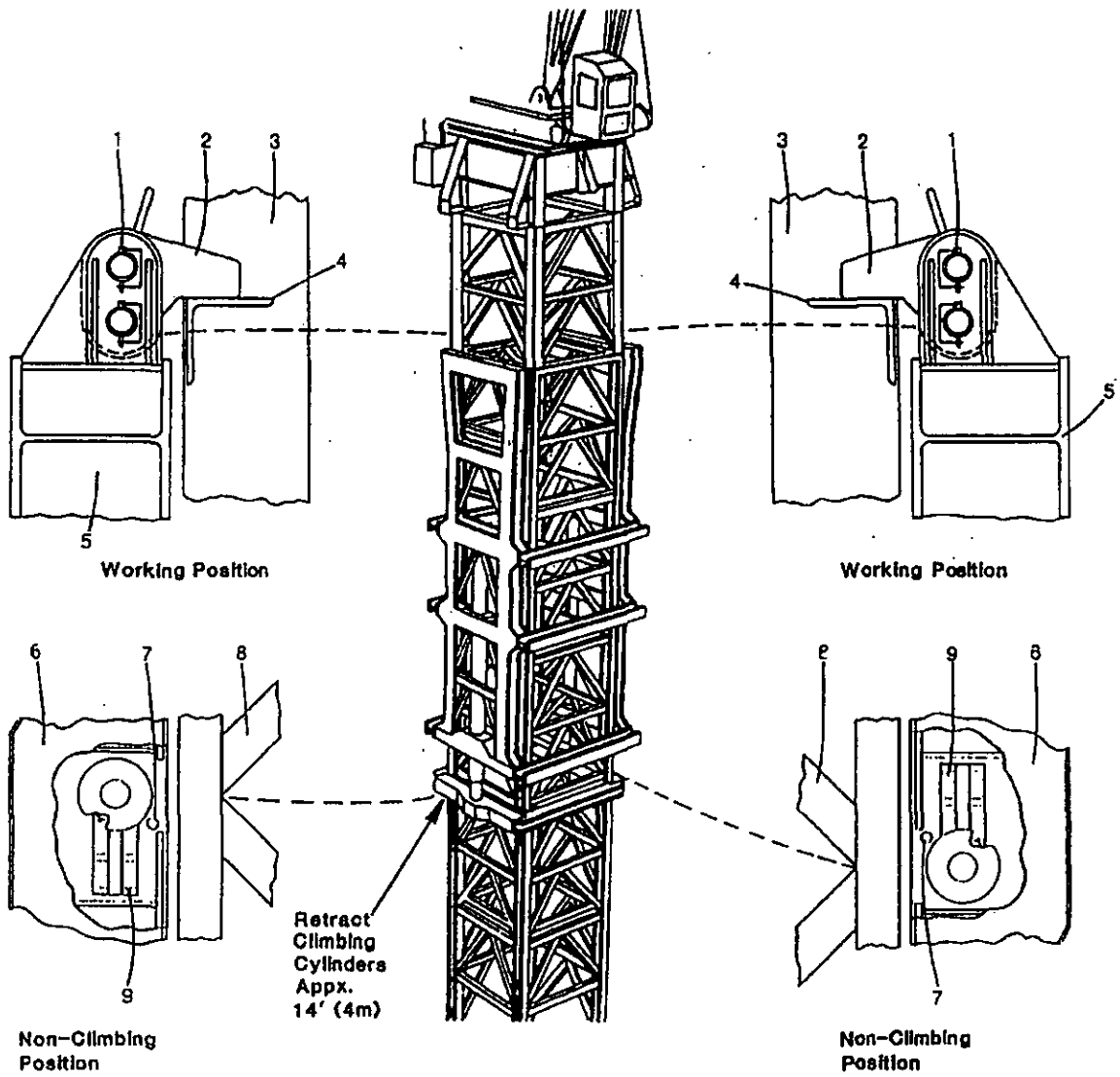

Fig. 4-14 FT577-C
Retract Climbing Cylinders

(1) Lockpins (2 Per Foot)
(2) Top Climbing Feet
(3) Tower Leg
(4) Horizontal Tower Angle
(5) Climbing Frame Side Panel
(6) Base Assembly
(7) Stop Pin
(8) Tower Section
(9) Bottom Climbing Feet

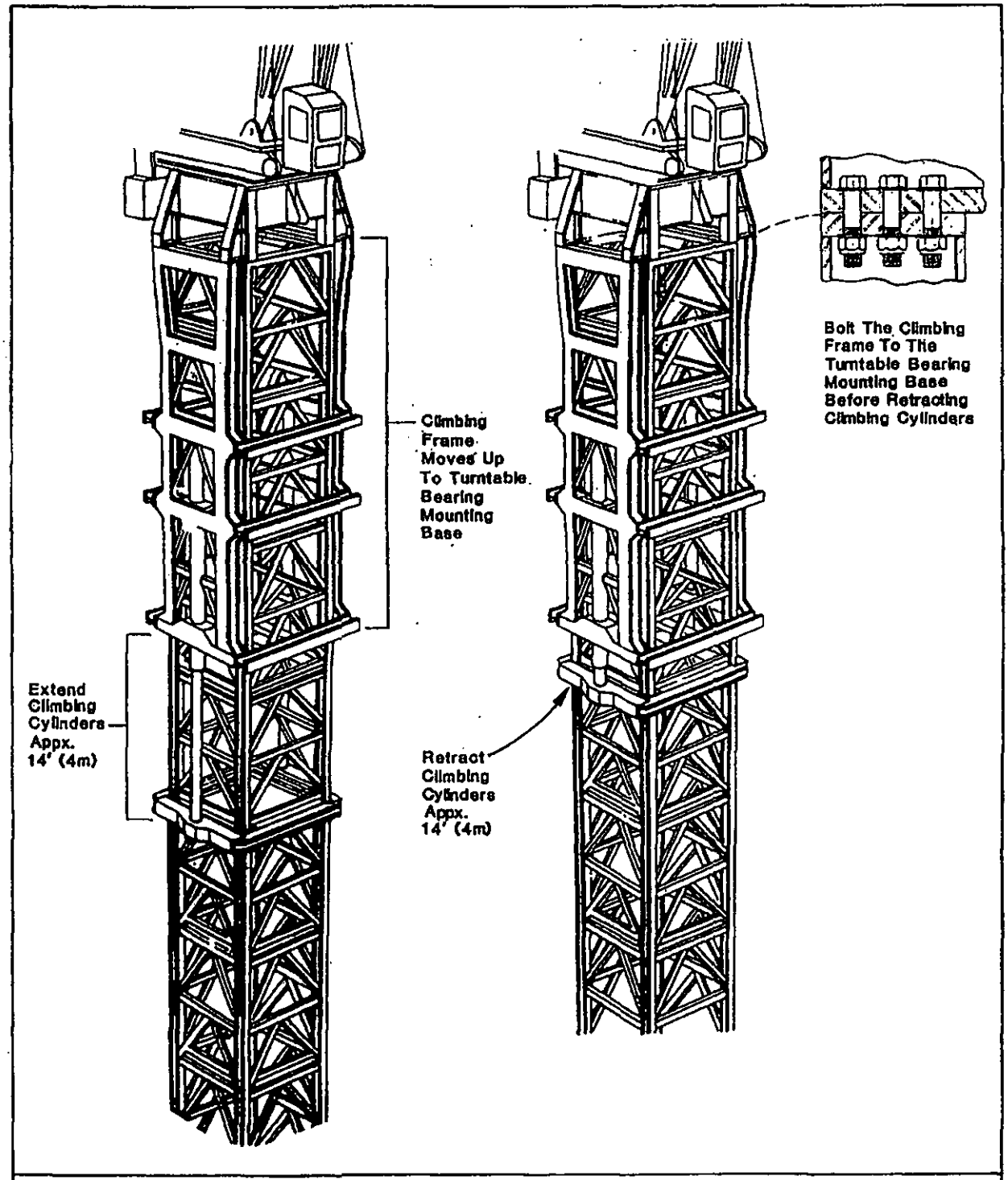

Fig. 4-15 FT577-C,FT578-C
Raise Climbing Frame To Turntable Bearing Mounting Base

Climbing Procedure
(TG1500-1900-2300-2300B)

WARNING

The Climbing Frame Must Be Properly Assembled And Attached To The Turntable Bearing Mounting Base. All Bolts, Hydraulic Fittings, Etc. Must Be Properly Tightened.

Follow the procedure below, in sequence, to avoid danger to personnel and machine components.

WARNING

Wind Velocity Must Not Exceed 20 MPH (32 KPH) During Climbing.

(1) If the machine is so equipped, position the auxiliary hoist hook block 20 feet (6m) from the tip extension head machinery.
(2) Remove the access ladder to the upper, place on the top outside climbing frame platform and temporarily secure for ease of reassembly after climbing.
(3) Attach the main hoist hook block to the monorail beam. Position the hook latch toward the monorail counterweight to prevent possible damage to the latch. The monorail trolley must be in its forward position and latched.

Note: For the models TG1500-1900, if the main hoist is reeved with three or four parts of line, the climbing boom deflector roller (see Fig. 4-7) must be installed on the bottom of the boom top section. Within the limits of the capacity chart, the roller may remain on the boom for normal machine operation with one, three, or four parts of line. For two parts line the roller must be removed if the machine will be operating near minimum radius. Removing the roller will avoid damage to the main hoist rope or to the roller. For the model 2300B with the open throat boom, the climbing deflector roller must be installed on the bottom of the boom top section for two or more parts of line. See Fig. 4-7. The roller may remain installed for normal machine operation. The bottom climbing boom deflector roller is not required on the models 2300 and 2300B with four parts line maximum boom.

(4) Position the monorail beam over the tower section to be added and attach the monorail lifting slings. For proper assembly position on the existing tower, note the orientation of the platform in the tower to be added.
(5) Lift the monorail beam and tower as a unit and pin in position at the turntable bearing mounting base. See Fig. 4-18. A spotter on the top climbing frame platform is required to assist in positioning the monorail for pinning.

Note: A 30 foot (9.14m) guide rope tied to the rear of the monorail, and a rope tied to the front of the monorail beam to keep it oriented, will be helpful during installation.

To avoid possible damage by interference with the tower, maintain clearance between the existing tower and the monorail while hoisting. Observe the boom radius when the monorail is pinned. The same radius will be used when unpinning. Overriding the boom upper limit may be required for pinning or unpinning. This is done by holding the boom hoist override switch in the "On" position while moving the boom hoist control lever to the "up" position.

CAUTION

Use Extreme Care To Avoid Damage To The Boom And Boom Backstops.

(6) Unlatch the monorail trolley and roll the tower section to be added approximately 12 inches (2.54cm) from the existing tower. See Fig. 4-16.

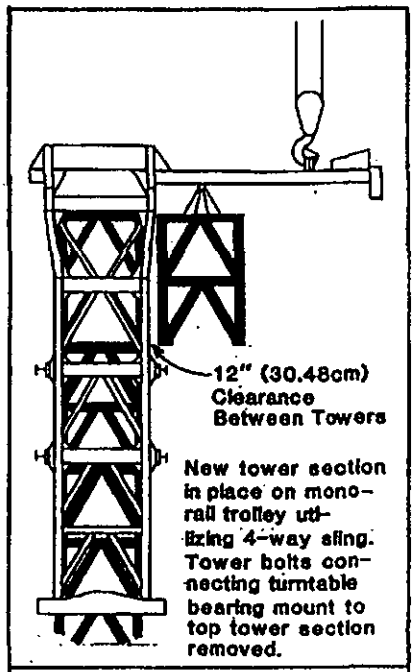

Fig. 4-16
New Tower Section At 12"(30.48cm) Clearance

(7) Carefully lower the main hoist hook block to rest on its platform on the monorail beam. See Fig. 4-17. A slight amount of booming out may be required to get the hook block to lay forward as the line tension is relaxed.

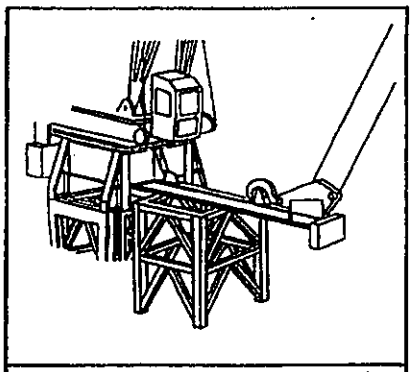

Fig. 4-17 FT575-C
Cradle Hook Block

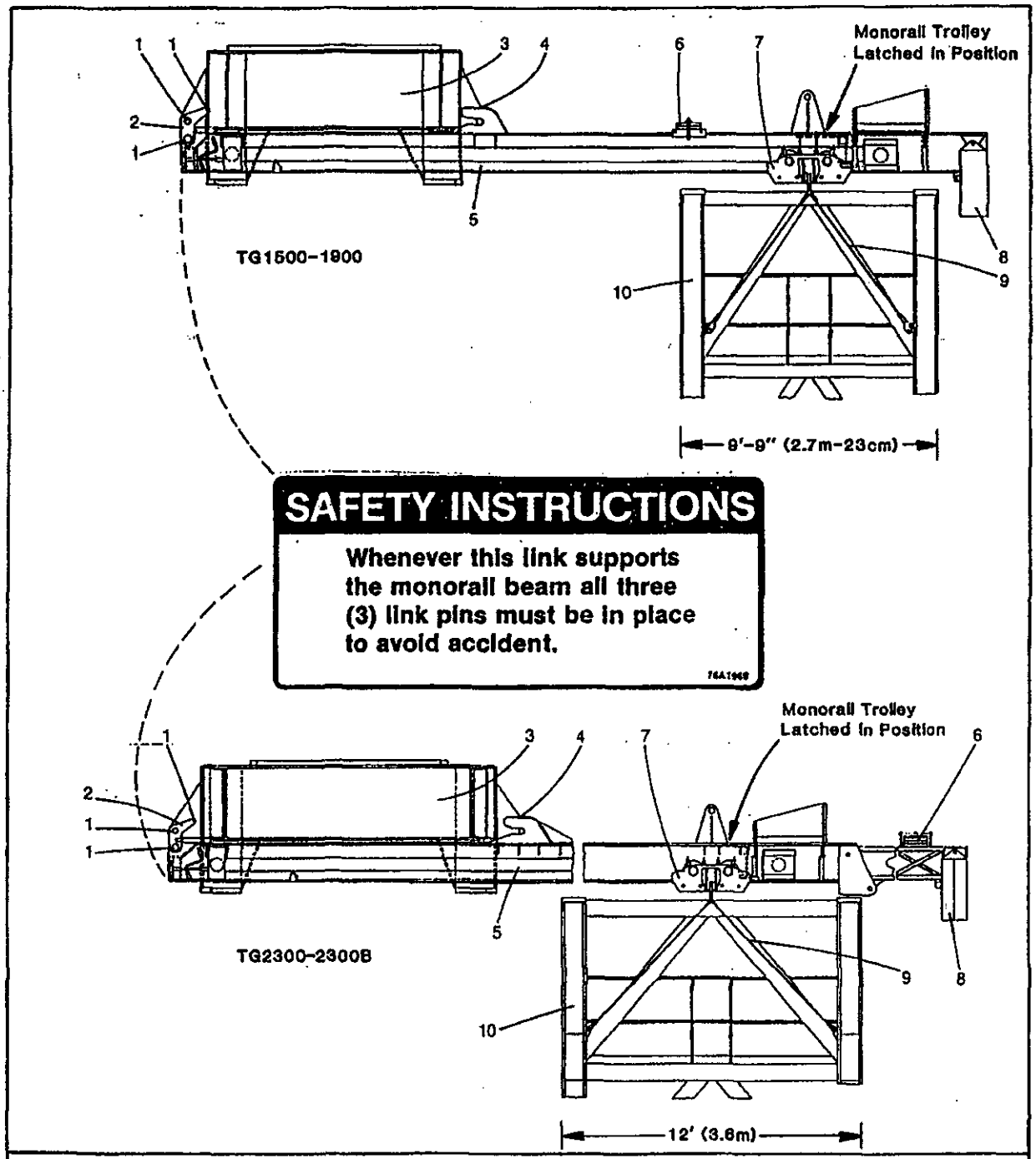

Fig. 4-18 FT337-D,FT411-D,FT586-A

Pin Monorail Beam To Turntable Bearing Mtg. Base

(1) Link Pins
(2) Link
(3) Turntable Bearing Mtg. Base
(4) Connecting Lug
(5) Monorail Beam
(6) Adjustable Weight
(7) Monorail Trolley
(8) Monorail Ctwt.
(9) Sling
(10) Tower Section

CAUTION

Do Not Drop The Hook Block. Excessive Shock May Cause Damage To The Monorail Or Other Machine Components.

CAUTION

To Avoid Excessive Loading In The Monorail Beam, At No Time Is The Hook Block To Rest On The Monorail With A Tower Suspended From The Monorail More Than 12 Inches (30.48cm) From The Existing Tower. Steps 6 And 7 May Not Be Reversed.

(8) Boom up until the traveling counterweight trolleys can be latched. Overriding the boom upper limit may be required. Maintain sufficient slack in the main hoist line to avoid lifting the hook block off the monorail platform. Latch the counterweight trolley latches. See Fig. 4-19.

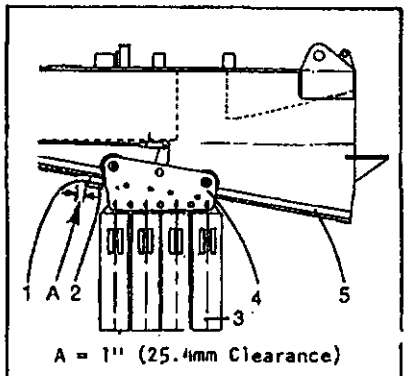

Fig. 4-19
Counterweight Latch
(1) Latch Plate
(2) Lug
(3) Counterweight Sections
(4) Counterweight Trolley
(5) Roller Path

(9) Swing the machine to align the centerline of the machine directly over the centerline of the monorail and apply the swing brake.
(10) Shut down the engine.
(11) Observe the hydraulic pressure gauge on the climbing frame control panel. If the gauge indicates pressure, open the needle valve on the side of the control panel, to allow the pressure to bleed off. (See Fig. 4-8.) Do so very carefully to avoid spraying of oil. Allow the valve to remain open until the control panel gauge indicates the pressure no longer remains and then close the needle valve.
(12) Remove the bypass hose located beneath the main hoist drum. This hose interconnects the climbing circuit pressure and return tubes. Connect the climbing hoses to these tubes. Drape the climbing hoses over the side of the machine and connect them to the control panel. See Fig. 4-20. Start the engine and leave it running at 1200 RPM.

IMPORTANT

1200 RPM Maintains The Optimum Pressure For The Climbing Circuit.

(13) On the initial climbing operation, after assembly of the climbing frame, it is necessary to bleed the system per the hydraulic priming procedure described earlier in this section of the manual.

Note: If the hydraulic power unit was used to climb the frame to the machine, this step can be deleted.

(14) On the initial climb, or if the climbing system has not been used within the last 30 days, the complete system operation should be verified per the climbing system function test, as follows:
(a) The main system relief can only be checked when the turntable bearing mounting base and the tower are bolted together. With the climbing base just above the first angle brace from full retract, rotate the climbing feet to the climbing position. See Fig. 4-4.

Install the stop pins and rest the climbing feet on the angle brace. Move the directional control valve lever in the extend direction. Observe the pressure guage on the control panel. The pressure should be between 3300 to 3400 PSI (22754 to 23443 kPa) for the models 1500-1900, and 3800 to 3900 PSI (26201 to 26891 kPa) for the models 2300-2300B. When verifying the relief valve settings, do not operate the system over relief for more than five seconds at a time with a five minute cooling off period between cycles. After each step, slightly move the directional control valve lever in each direction to release trapped pressure. If the test results are not within the specified tolerances, do not climb. Contact your distributor or the factory.
(b) Check the rod side relief pressure by slightly bottoming out the climbing cylinders after rotating the climbing feet to the non-climbing position and installing the stop pins. Retract the cylinders until they bottom out, and then observe the pressure gauge on the control panel while moving the directional control valve lever in the retract mode. The pressure should be between 1700 and 1800 (11722 to 12411 kPa) for the models 1500-1900 and 2900 to 3000 PSI (19996 to 20685 kPa) for the models 2300-2300B.
(c) Check the flow control by extending the cylinders. The bottom climbing feet must be in the non-climbing position. Move the directional control valve lever fully to the extend position. Be alert for any shaking or chattering from the valves. Maintain this mode for approximately three feet (91cm) of cylinder extension.
(d) Check valve leakage by observing climbing base drift. Fully retract the

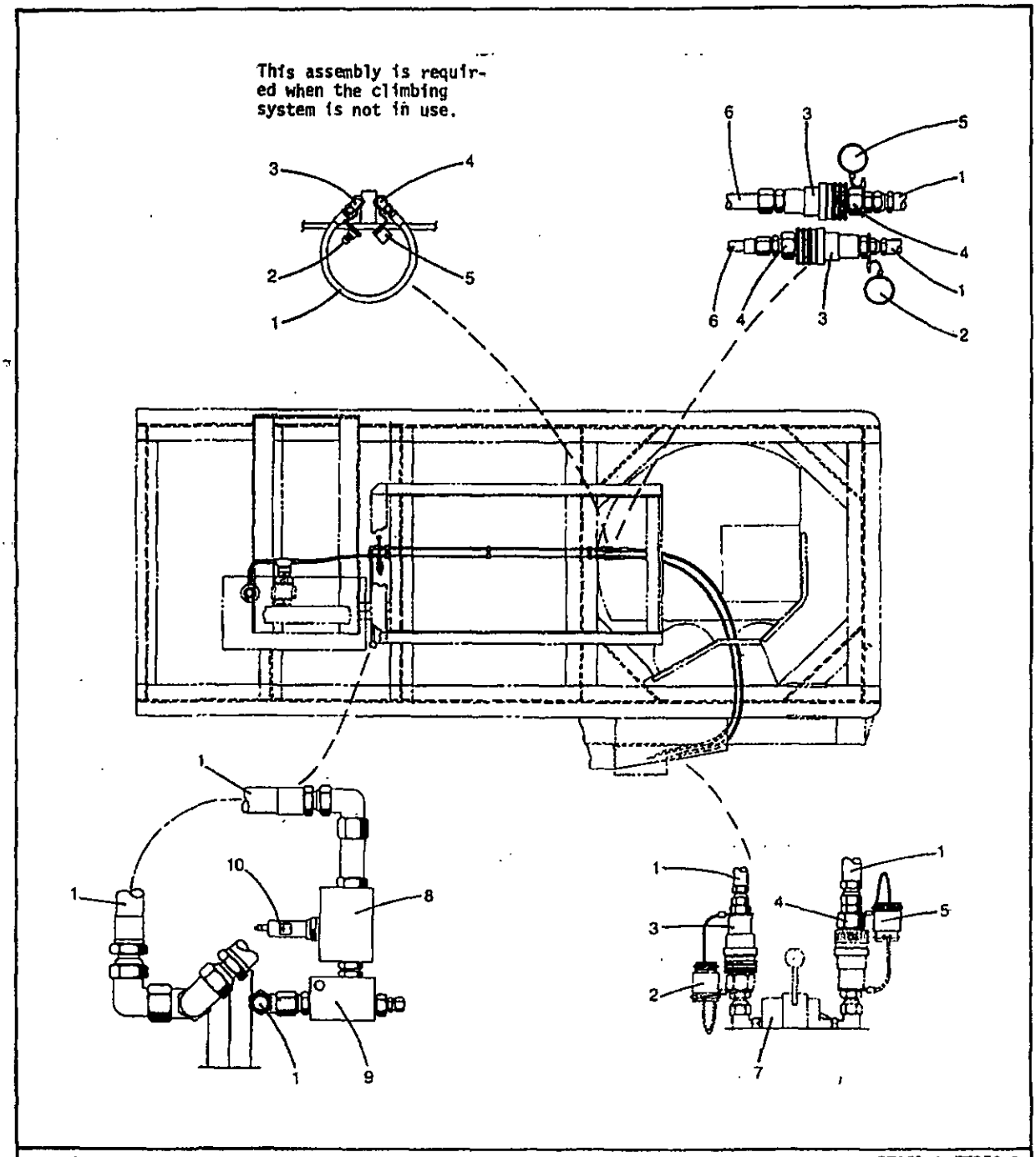

Fig. 4-20 FT351-D,FT352-D

Climbing System Hydraulics (Upper)

(1) Hose Assembly
(2) Dust Plug
(3) Quick Disconnect Body
(4) Quick Disconnect Nose
(5) Dust Cap
(6) Tube Assembly
(7) Control Panel
(8) Block
(9) Relief Valve
(10) Flow Switch

cylinders and observe the climbing base drift downward. During a 15 minute period, little or no drift should occur.

(15) If the climbing base is resting on the first angle brace from the fully retracted position, go to step 16. If not, continue with this step. The base will have to be moved to the first angle brace. With the feet in the non-climbing position, fully retract the climbing base, then lower to just above the first angle brace. Rotate the climbing feet to their climbing position and install the stop pins. Lower and rest the climbing feet on the first angle brace.

(16) Refer to the balance procedure below to determine the machine's balance radius. Position the boom at the starting radius indicated for balance, taking in excess main hoist line as required. Maintain sufficient slack in the main hoist line to avoid lifting the hook block off the monorail platform. Remove the 16 tower bolts between the turntable bearing mounting base and the existing tower. When the bolts have been removed, continue with the balance procedure to determine the machine's actual balance radius.

CAUTION

To Avoid Possible Damage To The Climbing Cylinders, It Is Extremely Important That The Machine Be Balanced.

Machine Balance Procedure (Used For Climbing, Lowering Or Transition From Tower To Bogie): Prior to balancing, complete all climbing, lowering or transition procedures indicated in the appropriate procedure.

See Charts C and D for approximate balance radii.

WARNING

Wind Velocity Must Not Exceed 5 MPH (8 kph) When Determining The Machine's Actual Balance Radius.

(a) If the machine is equipped with an auxiliary hoist unit, the auxiliary hoist hook block must be positioned 20 feet (6m) from the tip extension. During transition to bogie, the main hoist hook block must be kept at the machine operator's eye level unless two-blocking becomes a problem.

(b) If balancing with a monorail beam, the monorail must be properly pinned in position. If balancing with a tower suspended from the monorail trolley slings, the tower must be positioned at one foot (30.48cm) dimension from the existing tower. The counterweight trolleys must be latched. See Fig. 4-19. Taking into consideration the boom length on the machine to be climbed or lowered, position the boom at the starting "approximate balance radius" as indicated on the relevant machine model chart. Take in excess main hoist rope as required. During a climbing or lowering procedure with the monorail beam, keep sufficient slack in the main hoist line to avoid lifting the hook block off the monorail platform.

(c) The 16 tower bolts must be removed between the turntable bearing mounting base (or transition section for the transition procedure) and the existing tower per the climbing or lowering procedures.

(d) With the climbing base properly positioned per the climbing or lowering procedures, extend the climbing cylinders, raising the machine two inches (5.08cm) off the tower.

(e) If the top climbing frame rollers located in the top roller beams on the boom side of the machine are touching the tower, boom slowly forward until these rollers move off the tower.

If the top climbing frame rollers located in the top roller beams on the machine's counterweight side are touching the tower, boom slowly backward until these rollers move off the tower.

In either case, when the top rollers move off the tower, this will be the machine's balance radius. Record this radius and mark it on the radius indicator bar in the operator's cab.

(f) The machine's actual balance radius may be used for this type of climbing operation (climbing up with a 13'7-1/2" [3.9m-19cm] tower section, for instance), provided there are no major machine make-up variations that would affect its balance. During the lowering sequence, this radius will be the second radius determined, that is, when the tower is trolleyed out one foot (30.48cm) past the remaining tower.

Any of the following alterations will also warrant a recheck of the machine's balance per the balance procedure:

(i) Tip Extension added or removed
(ii) Hanger block added or removed.
(iii) Boom accessway added or removed.
(iv) Boom length change.
(v) Change of hook block.
(vi) Change of parts of line.
(vii) Removal or addition of any major components.

(g) The machine's actual balance radius must be again determined for each different type of climbing, lowering or transition procedure.

(17) To check the positive lock characteristics of the holding valves, perform the following drift test. Check the machine to ensure that it is ready to climb. Move the control valve to the "Up" direction and climb the machine up six inches (15cm) and stop. Wait approximately 15 minutes, then check the machine for any amount

4

of drift downward. If drift occurs, do not climb the machine. Contact your distributor or the factory.

(18) Before making the actual climb, check the complete system for proper operation by raising and lowering the machine approximately two feet (61cm). Verify the control characteristics by moving the control to the "Down" position, moving the machine as slowly as possible for three inches (8cm), then stop. Repeat at 1/2, then at full speed.

CAUTION

Be Alert For Any Drifting, Inability To Stop, Shaking Of The Climbing Frame Or Chattering From The Valves. If The Climbing System Does Not Operate Properly, Contact Your Distributor Or The Factory.

(19) Before beginning the actual climb, ensure that both the machine and the climbing frame are ready. A means of good communication will be required. Use of two-way radios is recommended.

(20) To begin the climb, move the directional control valve to the "Up" direction. To avoid system shock, avoid sudden movements of the directional control valve. Note the pressure gauge reading during climbing. A sudden increase in pressure will indicate binding.

WARNING

During Climbing Or Lowering Operations, All Personnel Must Be Aware Of The Slow Relative Motion Between Large Structural Parts. Keep Head And Limbs Clear To Avoid Serious Injury.

(21) If there is a side wind during climbing, it is likely that the slide bars on the windward side of the climbing frame will rub on the tower. This is normal and can be ignored unless it causes binding. If binding or excess contact must be corrected, stop the climb and determine to which side the machine must be moved. Move the diverter valve to the opposite side cylinder and hold it there. Move the control valve to the "Up" position and hold it until correction has been made. To avoid excessive system pressure, do not over correct. Stop, return the divertor valve to the center position and continue the climb.

WARNING

If At Anytime The Climbing Or Lowering Sequences Cannot Be Completed Due To Improper Functioning Of The Machine Or Climbing System, Return The Machine To The Existing Tower And Tighten The Connection Bolts To Their Proper Value.

(22) Extend the climbing cylinders until there is approximately 3-1/2 inches (9cm) clearance between the top of the existing tower and the bottom of the tower to be added. See Fig. 4-21.

(23) With the hand operated crank, trolley the tower to be added in directly over the existing tower. See Fig. 4-22. (A continuous air drive wrench with the appropriate adapter may be used instead of the crank. Do not use an impact wrench.) Use care to avoid excessive jerking of the tower section while it is being trolleyed in.

(24) Lower the machine and added tower onto the existing tower using drift pins to align the bottom bolt holes. See Fig. 4-22. Maintain a slight clearance at the bottom of the added tower to aid in installing all 16 bolts. Once the bolts are installed, lower the added tower to rest on the existing tower and stop. Clearance at the top of the tower must be maintained. Tighten the bottom bolts according to the recommended tower bolt tightening procedure described in Section 2 of this manual.

(25) Continue to lower the machine, using drift pins to align the top tower bolt holes. Booming up or down or use of the diverter valve may be required to align the drift pins.

(26) To aid in installing all 16 bolts, maintain a slight clearance at the top of the tower. Once the bolts are installed, lower the turntable bearing mounting base to rest on top of the tower. After installing all 16 top tower bolts, tighten them according to the recommended tower bolt tightening procedure described in Section 2 of this manual.

(27) Retract the climbing base slightly to provide clearance, and then rotate the climbing feet to the non-climbing position and install stop pins. Fully retract the climbing cylinders. While retracting, observe the climbing base for binding and correct as required. If the base assembly must be corrected during retract, stop and determine to which side correction must be made. Move the diverter valve to the cylinder that is behind, and move the control valve to the "Down" position until the base is even. To avoid excessive system pressure, do not over correct. Stop, return the diverter valve to the center position and continue to retract. See Fig. 4-8.

(28) After the base is fully retracted, lower it to just off the first angle brace. Rotate the climbing feet to the climbing position and install the stop pins. Lower and rest the base on the angle brace. Extend or retract the cylinders until there is a clearance between the cylinder rods and the base connecting pins. This is the storage position for the climbing base.

(29) To avoid pressurizing the hoses, the machine must be shut down before beginning this step. Since the hydraulics are no longer required, the hoses should be

removed at this time. Disconnect the climbing hoses from the control panel and the machine. Replace the protective caps on the control panel quick disconnects and reconnect the bypass hose assembly under the winch housing. See Fig. 4-20.

Note: Steps (30) and (31) may be done simultaneously if possible.

(30) Restart the engine and boom up until the traveling counterweight trolleys can be unlatched. Overriding the boom upper limit may be required. Use extreme care to avoid damaging the boom and boom backstops. To avoid possible damage to the monorail beam, do not allow the main hoist line to tighten.

(31) Boom to the noted radius in step (5) and carefully raise the main hoist hook block off the monorail. Take care not to damage the monorail by over tightening the hoist line.

(32) Unpin the lifting slings connected to the added tower and roll the monorail trolley to its latched position (18 foot [5.48m] radius for models TG1500-1900, 24 foot [7.3m] radius for models TG2300-2300B). Be sure that the monorail trolley is latched. The trolley drive mechanisms are to be in their stored position when not in use.

(33) Release the swing brake.

(34) Remove the monorail beam rear connecting pin and lower the monorail to the ground. Maintain sufficient clearance between the tower and monorail. The connecting pin may stay in attaching bracket.

(35) Disconnect the monorail from the hook block.

(36) Install the ladders for the added tower section and the access ladder to the upper.

(37) Climb completed.

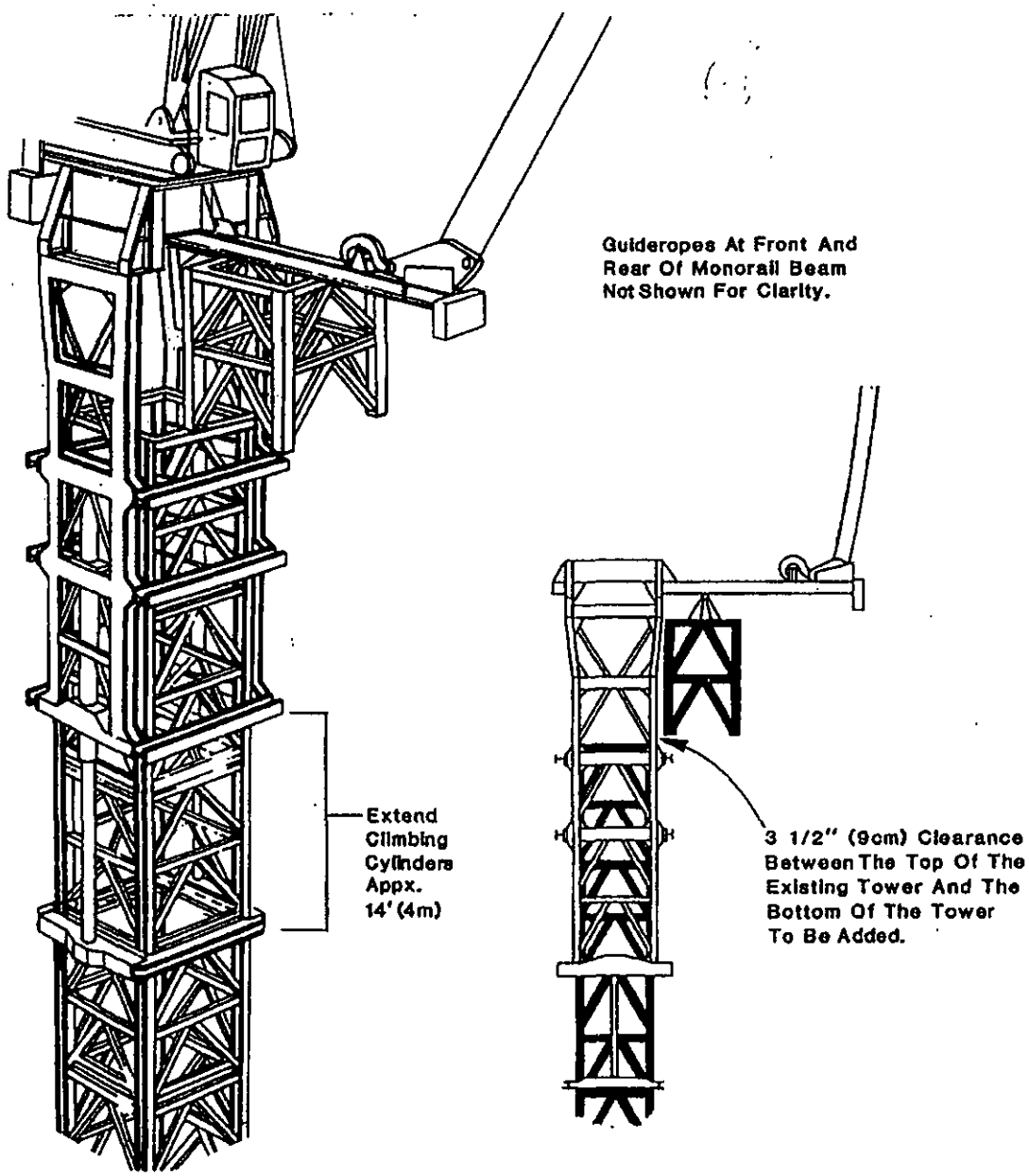

Fig. 4-21
Climb Machine

FT575-C

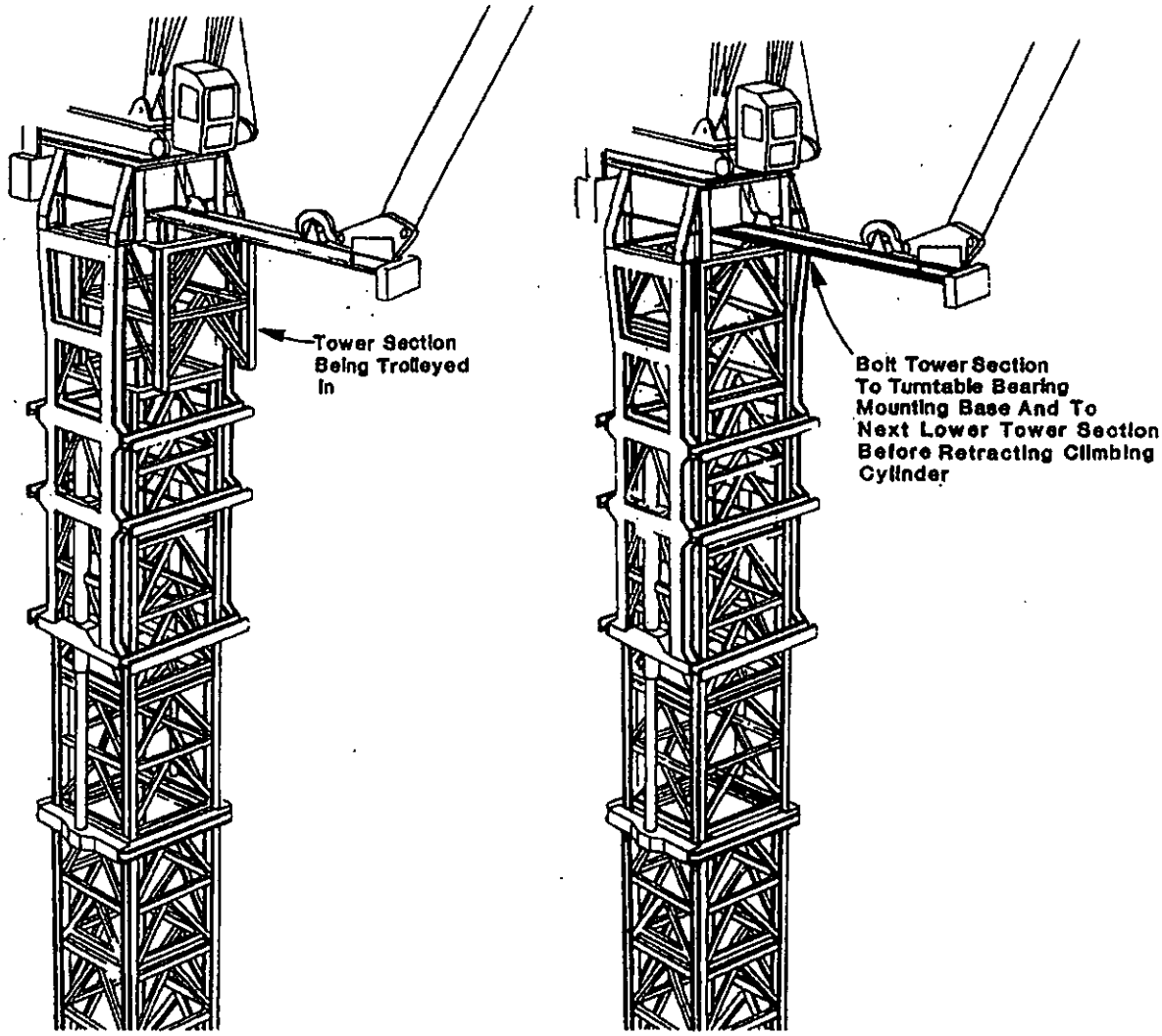

Fig. 4-22
Insert Tower And Bolt Tower Section

FT574-C

Climbing Procedure With Transition Section (TG1500-1900)

WARNING

The Climbing Frame Must Be Properly Assembled And Attached To The Turntable Bearing Mounting Base. All Bolts, Hydraulic Fittings, Etc. Must Be Properly Tightened.

WARNING

Wind Velocity Must Not Exceed 20 MPH (32 kph) When Climbing.

(1) If the machine is so equipped, position the auxiliary hoist hook block 20 feet (6m) from the tip extension head machinery.
(2) Remove the access ladder to the upper, place on the top outside climbing frame platform, and temporarily secure for ease of reassembly after climbing.
(3) Attach the main hoist hook block to the monorail beam. Position the hook latch toward the monorail counterweight to prevent possible damage to the latch. The monorail trolley must be in its forward position and latched.

Note: For the models TG1500-1900, if the main hoist is reeved with three or four parts of line, the climbing boom deflector roller must be installed on the bottom of the boom top section. Within the limits of the capacity chart, the roller may remain on the boom for normal machine operation with one, three, or four parts of line. For two parts line the roller must be removed if the machine will be operating near minimum radius. Removing the roller will avoid damage to the roller or to the main hoist rope. See Fig. 4-7.

(4) Position the monorail beam over the transition section and attach the monorail lifting slings. For proper assembly position on the existing tower, note the orientation of the platform in the transition section.
(5) Lift the monorail beam and transition section as a unit and pin in position at the turntable bearing mounting base. See Fig. 4-23. A spotter on the top climbing frame platform is required to assist in positioning the monorail for pinning.

Note: A 30 foot (9.14m) guide rope tied to the rear of the monorail, and a rope tied to the front of the monorail beam to keep it oriented, will be helpful during installation.

To avoid possible damage by interference with the tower, maintain clearance between the existing tower and the monorail while hoisting. Observe the boom radius when the monorail is pinned. The same radius will be used when unpinning. Overriding the boom upper limit may be required for pinning or unpinning. This is done by holding the boom hoist override switch in the "On" position while moving the boom hoist control lever to the "Up" position.

CAUTION

Use Extreme Care To Avoid Damage To The Boom And Boom Backstops.

(6) Unlatch the monorail trolley and roll the transition section to be added approximately 12 inches (30.48cm) from the existing tower. See Fig. 4-16.
(7) Carefully lower the main hoist hook block to rest on its platform on the monorail beam. A slight amount of booming out may be required to get the hook block to lay forward as the line tension is relaxed.

CAUTION

Do Not Drop The Hook Block. Excessive Shock May Cause Damage To The Monorail Or Other Machine Components.

CAUTION

To Avoid Excessive Loading In The Monorail Beam, At No Time Is The Hook Block To Rest On The Monorail With The Transition Section Suspended From The Monorail More Than 12 Inches (30.48m) From The Existing Tower. Steps 6 And 7 May Not Be Reversed.

(8) Boom up until the traveling counterweight trolleys can be latched. See Fig. 4-19. Overriding the boom upper limit may be required. Maintain sufficient slack in the main hoist line to avoid lifting the hook block off the monorail platform. Latch the counterweight trolley latches.
(9) Swing the machine to align the centerline of the machine directly over the centerline of the monorail and apply the swing brake.
(10) Shut down the engine.
(11) Observe the hydraulic pressure gauge on the climbing frame control panel. If the gauge indicates pressure, open the needle valve on the side of the control panel to allow the pressure to bleed off. See Fig. 4-8. Do so very carefully to avoid spraying of oil. Allow the valve to remain open until the control panel gauge indicates that pressure no longer remains and then close the needle valve.
(12) Remove the bypass hose located beneath the main hoist drum. This hose interconnects the climbing circuit pressure and return tubes. Connect the climbing hoses to these tubes. Drape the climbing hoses over the side of the machine and connect them to the control panel. See Fig. 4-20. Start the machine and leave it running at 1200 RPM.

(13) On the initial climbing operation, after assembly of the climbing frame, it is necessary to bleed the system per the hydraulic priming procedure described earlier in this section of the manual.

Note: If the hydraulic power unit was used to climb the frame to the machine, this step can be deleted.

(14) On the initial climb, or if the climbing system has not been used within the last 30 days, the complete system operation should be verified per the climbing system function test described earlier in this section of the manual.

(15) If the climbing base is resting on the first angle brace from the fully retracted position, go to step (16). If not, continue with this step. The base will have to be moved to the first angle brace. With the feet in the non-climbing position (see Fig. 4-4), fully retract the climbing base, then lower to just above the first angle brace. Rotate the climbing feet to their climbing position and install the stop pins. Lower and rest the climbing feet on the first angle brace.

(16) Refer to the balance procedure earlier in this section of the manual to determine the machine's balance radius. Position the boom at the starting radius indicated for balance, taking in excess main hoist line as required. Maintain sufficient slack in the main hoist line to avoid lifting the hook block off the monorail platform. Remove the 16 tower bolts between the turntable bearing mounting base and the existing tower. When the bolts have been removed, continue with the balance procedure to determine the machine's actual balance radius.

CAUTION

To Avoid Possible Damage To The Climbing Cylinders, It Is Extremely Important That The Machine Be Balanced.

(17) To check the positive lock characteristics of the holding valves, perform the following drift test. Check the machine to ensure that it is ready to climb. Move the control valve to the "Up" direction and climb the machine up 6 inches (15cm) and stop. Wait approximately 15 minutes, then check the machine for any amount of drift downward. If drift occurs, do not climb the machine. Contact your distributor or the factory.

(18) Before making the actual climb, check the complete system for proper operation by raising and lowering the machine approximately two feet (61cm). Verify the control characteristics by moving the control to the "Down" position, moving the machine as slowly as possible for three inches (8cm), then stop. Repeat at 1/2, then at full speed.

CAUTION

Be Alert For Any Drifting, Inability To Stop, Shaking Of The Climbing Frame Or Chattering From The Valves. If The Climbing System Does Not Operate Properly, Contact Your Distributor Or The Factory.

(19) Before beginning the actual climb, ensure that both the machine and the climbing frame are ready. A means of good communication will be required. Use of two-way radios is recommended.

(20) To begin the climb, move the directional control valve to the "Up" direction. To avoid system shock, avoid sudden movements of the directional control valve. Note the pressure gauge reading during climbing. A sudden increase in pressure indicates binding.

WARNING

During Climbing Or Lowering Operations, All Personnel Must Be Aware Of The Slow Relative Motion Between Large Structural Parts. Keep Head And Limbs Clear To Avoid Serious Injury.

(21) If there is a side wind during climbing, it is likely that the slide bars on the windward side of the climbing frame will rub on the tower. This is normal and can be ignored unless it causes binding. If binding or excess contact must be corrected, stop the climb and determine to which side the machine must be moved. Move the diverter valve to the opposite side cylinder and hold it there. Move the diverter valve to the opposite side cylinder and hold it there. Move the control valve to the "Up" position and hold it until correction has been made. To avoid excessive system pressure, do not over correct. Stop, return the diverter valve to the center position and continue the climb.

WARNING

If At Anytime The Climbing Or Lowering Sequences Cannot Be Completed Due To Improper Functioning Of The Machine Or Climbing System, Return The Machine To The Existing Tower And Tighten The Connecting Bolts To Their Proper Value.

(22) Extend the climbing cylinders until there is approximately 3-1/2 inches (9cm) clearance between the top of the existing tower and the bottom of the transition section. See Fig. 4-23.

(23) With the hand operated crank, trolley the transition section in directly over the existing tower.

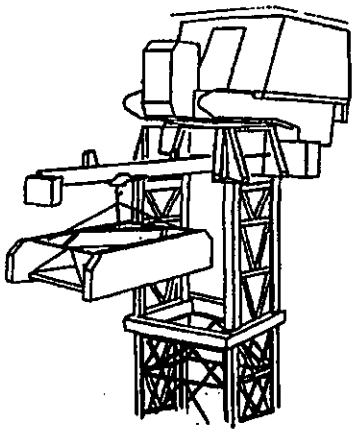

Transition section in place on monorail trolley utilizing 4-way sling. Bolts connecting turntable bearing mount to top tower section removed. Climbing cylinders pressurized and lifting machine upper and climbing frame.

Fig. 4-23
Transition Section

See Fig. 4-24. (A continuous air drive wrench with the appropriate adapter may be used instead of the crank. Do not use an impact wrench). Use care to avoid excessive jerking of the transition section while it is being trolleyed in.

(24) Lower the machine and the transition section onto the existing tower using drift pins to align the bottom bolt holes. See Fig. 4-24. Maintain a slight clearance at the bottom of the transition section to aid in installing all 16 bolts. Once the bolts are installed, lower the transition section to rest on the existing tower and stop. Clearance at the top of the transition must be maintained. Tighten the bottom bolts according to the recommended tower bolt tightening procedure described in Section 2 of this manual.

(25) Continue to lower the machine, using drift pins to align the top transition section bolt holes. Booming up or down or use of the diverter valve may be required to align the drift pins.

(26) To aid in installing all 16 bolts, maintain a slight clearance at the top of the transition section. Once the bolts are installed, lower the turntable bearing mounting base to rest on the top of the transition section. After installing all 16 top tower bolts, tighten them according to the recommended tower bolt tightening procedure described in Section 2 of this manual.

(27) Lower and position the base on the angle brace and allow it to remain in this position. Extend or retract cylinders until there is a clearance between the cylinder rods and the base connecting pins. This is the storage position for the climbing base.

(28) To avoid pressurizing the hoses, the machine must be shut down before beginning this step. Since the hydraulics are no longer required, the hoses should be removed at this time. Disconnect the climbing hoses from the control panel and the machine. Replace the protective caps on the control panel quick disconnects and reconnect the bypass hose assembly under the winch housing. See Fig. 4-20.

Note: Steps (29) and (30) may be done simultaneously if possible.

(29) Restart the engine and boom up until the traveling counterweight trolleys can be unlatched. Overriding the boom upper limit may be required. Use extreme care to avoid damaging the boom and boom backstops.. To avoid possible damage to the monorail beam, do not allow the main hoist line to tighten.

(30) Boom to the noted radius in step (5) and carefully raise the main hoist hook block off the monorail. Take care not to damage the monorail by over tightening the hoist line.

(31) Unpin the lifting slings connected to the transition section and roll the monorail trolley to its latched position (18 foot [5.4m] radius for models TG1500-1900). Be sure that the trolley is latched. The trolley drive mechanisms are to be in their stored positions when not in use.

(32) Release the swing brake.

(33) Remove the monorail beam rear connecting pin and lower the monorail to the ground. Maintain sufficient clearance between the tower and monorail. The connecting pin may stay in attaching bracket.

(34) Disconnect the monorail from the hook block.

(35) Install the ladders for the added transition section and the access ladder to the upper.

(36) Climb completed.

Climbing Procedure With Bogie Transition (TG1500-1900)

WARNING

The Climbing Frame Must Be Properly Assembled And Attached To The Turntable Bearing Mounting Base. All Bolts, Hydraulic Fittings, Etc. Must Be Properly Tightened.

This section must be read along with the Tower to Bogie Transition Procedure in Section 10 of this manual. Follow the procedure below, in sequence, to avoid danger to personnel and machine components.

WARNING

Wind Velocity Must Not Exceed 20 MPH (32 kph) When Climbing.

(1) If the machine is so equipped, position the auxiliary hoist hook block 20 feet (6m) from the tip extension head machinery.

(2) Remove the access ladder to the transition section and place on the top outside climbing frame platform.

(3) Boom up until the traveling counterweight trolleys can be latched. See Fig. 4-19. Overriding the boom upper limit may be required. This is done by holding the boom hoist override switch in the "On" position while moving the boom hoist control lever to the "Up" position. Latch the counterweight trolley latches.

> **CAUTION**
> Use Extreme Care To Avoid Damage To The Boom And Boom Backstops.

(4) Swing the machine to align the centerline of the machine directly over the centerline of the transition section (parallel to the transition's longest dimension) and apply the swing brake.

(5) Shut down the engine.

(6) Observe the hydraulic pressure gauge on the climbing frame control panel. If the gauge indicates pressure, open the needle valve on the side of control panel, to allow pressure to bleed off. See Fig. 4-8. Do so very carefully to avoid spraying of oil. Allow the valve to remain open until the control panel gauge indicates that pressure no longer remains and then close the needle valve.

(7) Remove the bypass hose located beneath the main hoist drum. This hose interconnects the climbing circuit pressure and return tubes. Connect the climbing hoses to those tubes. Drape the climbing hoses over the side of the machine and connect them to the control panel. Start the machine and leave it running at 1200 RPM.

(8) On the initial climbing operation, after assembly of the climbing frame, it is necessary to bleed the sytem per the hydraulic priming procedure described earlier in this section.

Note: <u>If the hydraulic power unit was used to climb the frame to the machine, this step can be deleted.</u>

(9) On the initial climb, or if the climbing system has not been used within the last 30 days, the complete system operation should be verified per the climbing system function test as described earlier in this section.

(10) If the climbing base is resting on the first angle brace from the fully retracted position, go to step (11). If not, continue with this step. The base will have to be moved to the first angle brace. With the feet in the non-climbing position (see Fig. 4-4), fully retract the climbing base, then lower to just above the first angle brace. Rotate the climbing feet to their climbing position and install the stop pins. Lower and rest the climbing base on the first angle brace.

(11) Refer to the balance procedure earlier in this section of the manual to determine the machine's balance radius. Position the boom at the starting radius indicated for balance, taking in excess main hoist line as required. Remove the 16 tower bolts between the transition section and the top of the existing tower. When the bolts have been removed, continue with the balance procedure to determine the machine's actual balance radius.

> **CAUTION**
> To Avoid Possible Damage To The Climbing Cylinders, It Is Extremely Important That The Machine Be Balanced.

(12) To check the positive lock characteristics of the holding valves, perform the following drift test. Check the

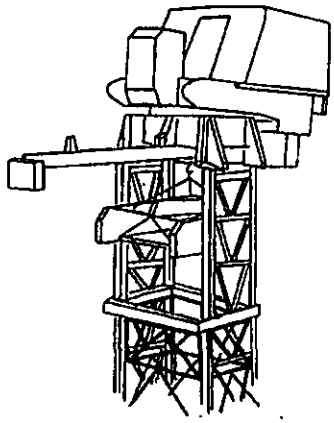

Easing transition section into place within the climbing frame.

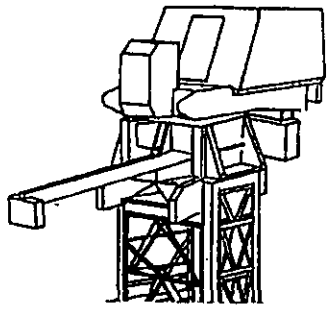

Transition section positioned and secured in place. Climbing cylinders retracted.

Fig. 4-24
Positioning The Transition Section

machine to ensure that it is ready to climb. Move the control valve to the "Up" direction and climb the machine up 6 inches (15cm) and stop. Wait approximately 15 minutes, then check the machine for any amount of drift downward. If drift occurs, do not climb the machine. Contact your distributor or the factory.

(13) Before making the actual climb, check the complete system for proper operation by raising and lowering the machine approximately two feet (61cm). Verify the control characteristics by moving the control to the "Down" position, moving the machine as slowly as possible for three inches (8cm). Then stop. Repeat at 1/2, then at full speed.

CAUTION

Be Alert For Any Drifting, Inability To Stop, Shaking Of The Climbing Frame Or Chattering From The Valves. If The Climbing System Does Not Operate Properly, Contact Your Distributor Or The Factory.

(14) Before beginning the actual climb, ensure that both the machine and the climbing frame are ready. A means of good communication will be required. Use of two-way radios is recommended.

(15) To begin the climb, move the directional control valve to the "Up" direction. To avoid system shock, avoid sudden movements of the directional control valve. Note the pressure gauge reading during climbing. A sudden increase in pressure indicates binding.

WARNING

During Climbing Or Lowering Operations, All Personnel Must Be Aware Of The Slow Relative Motion Between Large Structural Parts. Keep Head And Limbs Clear To Avoid Serious Injury.

(16) If there is a side wind during climbing, it is likely that the slide bars on the windward side of the climbing frame will rub on the tower. This is normal and can be ignored unless it causes binding. If binding or excess contact must be corrected, stop the climb and determine to which side the machine must be moved. Move the diverter valve to the opposite side cylinder and hold it there. Move the control valve to the "Up" position and hold it until correction has been made. To avoid excessive system pressure, do not over correct. Stop, return the diverter valve to the center position and continue the climb.

WARNING

If At Anytime The Climbing Or Lowering Sequences Cannot Be Completed Due To Improper Functioning Of The Machine Or Climbing System, Return The Machine To The Existing Tower And Tighten The Connecting Bolts To Their Proper Value.

(17) Extend the climbing cylinders until there is sufficient clearance to install the upper bogie beams.

(18) Refer to the transition procedure in Section 10 of this manual for aligning the upper bogie beams with the transition section, and for securing both upper bogie beams.

(19) Unbolt the climbing frame from the turntable bearing mounting base and fully retract the climbing cylinders.

(20) To avoid pressurizing the hoses, the machine must be shut down before beginning this step. Since the hydraulics are no longer required, the hoses should be removed at this time. Disconnect the climbing hoses from the control panel and the machine. Replace the protection caps on the control panel quick disconnects and reconnect the bypass hose assembly under the winch housing. See Fig. 4-20.

(21) Restart the engine and boom up until the traveling counterweight trolleys can be unlatched. Overriding the boom hoist may be required. Use extreme care to avoid damaging the boom and boom backstops.

(22) Refer to the Tower to Bogie Transition procedure in Section 10 of this manual for all subsequent steps for the completion of the bogie assembly.

Lowering Procedure (TG1500-1900-2300-2300B)

WARNING

The Climbing Frame Must Be Properly Assembled And Attached To The Turntable Bearing Mounting Base. All Bolts, Hydraulic Fittings, Etc., Must Be Properly Tightened.

Follow the procedure below, in sequence, to avoid danger to personnel and machine components.

WARNING

Wind Velocity Must Not Exceed 20 MPH (32 kph) During Lowering.

(1) If the machine is so equipped, position the auxiliary hoist hook block 20' (6m) from the tip extension head machinery.

(2) Remove the access ladder to the upper, place on the top outside climbing frame platform, and temporarily secure for ease of reassembly after lowering.

(3) Attach the main hoist hook block to the monorail beam. Position the hook latch toward the monorail counterweight to prevent possible damge to the latch. The monorail trolley must be in its forward position and latched.

Note: For the models TG1500-1900, if the main hoist is reeved with the three or four parts of line, the climbing boom deflector roller (see Fig. 4-7) must be installed on the bottom of the boom

top section. Within the limits of the capacity chart, the roller may remain on the boom for normal machine operation with one, three, or four parts of line. For two parts line the roller must be removed if the machine will be operating near minimum radius. Removing the roller will avoid damage to the main hoist rope or to the roller. For the model 2300B with the open throat boom, the climbing boom deflector roller must be installed on the bottom of the boom top section for two or more parts of line. The roller may remain installed for normal machine operation. The climbing boom deflector roller is not required on the 2300 or 2300B with the four part line maximum boom.

(4) Lift the monorail beam to the turntable bearing mounting base level and pin it in position. A spotter on the top climbing frame platform is required to assist in positioning of the monorail for pinning.

Note: A 30 foot (9.14m) guide rope tied to the rear of the monorail, and a rope tied to the front of the monorail beam to keep it oriented, will be helpful during installation.

To avoid possible damage by interference with the tower, maintain clearance between the existing tower and the monorail while hoisting. Observe the boom radius when the monorail is pinned. The same radius will be used when unpinning. Overriding the boom upper limit may be required for pinning or unpinning. This is done by holding the boom hoist override switch in the "On" position while moving the boom hoist control lever to the "Up" position.

CAUTION

Use Extreme Care To Avoid Damaging The Boom And Boom Backstops.

(5) Using the hand operated crank, unlatch the monorail trolley and roll it in to the center of the tower. (A continuous air drive wrench with the appropriate adapter may be used instead of the crank. Do not use an impact wrench).

(6) Carefully lower the main hoist hook block to rest on its platform on the monorail beam. A slight amount of booming out may be required to get the hook block to lay forward as the line tension is relaxed.

CAUTION

Do Not Drop The Hook Block. Excessive Shock May Cause Damage To The Monorail Or Other Machine Components.

(7) Boom up until the traveling counterweight trolleys can be latched. See Fig. 4-19. Overriding the boom upper limit may be required. Maintain sufficient slack in the main hoist line to avoid lifting the hook block off the monorail platform. Latch the counterweight trolley latches.

(8) Swing the machine to align the centerline of the machine directly over the centerline of the monorail and apply the swing brake.

(9) Shut down the engine.

(10) Observe the hydraulic pressure gauge on the climbing frame control panel. If the gauge indicates pressure, open the needle valve on the side of the control panel to allow the pressure to bleed off. See Fig. 4-8. Do so very carefully to avoid spraying of oil. Allow the valve to remain open until the control panel gauge indicates the pressure no longer remains and then close the needle valve.

(11) Remove the bypass hose located beneath the main hoist drum. This hose interconnects the climbing circuit pressure and return tubes. Connect the climbing hoses to these tubes. Drape the climbing hoses over the side of the machine and connect them to the control panel. See Fig. 4-20. Start the machine and leave it running at 1200 RPM.

(12) On the initial lowering operation, after assembly of the climbing frame, it will be necessary to bleed the system per the hydraulic priming procedure.

Note: If the hydraulic power unit was used to climb the frame to the machine, this step can be deleted.

(13) On the initial lowering or if the climbing system has not been used within the last 30 days, the complete system operation should be verified per the climbing system function test described earlier in this section of the manual.

(14) If the climbing base is resting on the first angle brace from the fully retracted position, go to step (15). If not, continue with this step. The base will have to be moved to the first angle brace. With the feet in the non-climbing position (see Fig. 4-4), fully retract the climbing base, then lower to just above the first angle brace. Rotate the climbing feet to their climbing position and install the stop pins. Lower and rest the climbing feet on the first angle brace.

(15) Refer to the balance procedure described earlier in this section of the manual for determining the machine's balance radius. Position the boom at the starting radius indicated for balance, taking in excess main hoist line as required. Maintain sufficient slack in the main hoist line to avoid lifting the hook block off the monorail platform. Remove the 16 tower bolts between the turntable bearing mounting base and the existing tower. When the bolts have been removed, continue with the balance procedure to determine the machine's actual balance radius.

CAUTION

To Avoid Damage To The Climbing Cylinders, It Is Extremely Important That The Machine Be Balanced.

(16) To check the positive lock characteristics of the holding valves, perform the following drift test. Check the machine to ensure that it is ready to raise. Move the control valve to the "Up" direction and climb the machine up to 6 inches (15cm) and stop. Wait approximately 15 minutes, then check the machine for any amount of drift downward. If drift occurs, do not lower the machine. Contact your distributor or the factory.

(17) Before making the actual lowering, check the complete system for proper operation by raising and lowering the machine approximately two feet (61cm). Verify the control characteristics by moving the control to the "Down" position, moving the machine as slowly as possible for three inches (8cm), then stop. Repeat at 1/2, then at full speed.

CAUTION

Be Alert For Any Drifting, Inability To Stop, Shaking Of The Climbing Frame Or Chattering From The Valves. If The Climbing System Does Not Operate Properly, Contact Your Distributor Or The Factory.

(18) Retract the climbing base slightly to provide clearance, and then rotate the climbing feet to the non-climbing position and install stop pins. See Fig. 4-4. Extend the climbing cylinders approximately 14 feet (4m) until the climbing feet can be rotated over the second horizontal tower angle. Rotate the bottom climbing feet to their climbing position and install the stop pins. While extending, observe the climbing base for binding and correct as required. If the base assembly must be corrected during the extending, stop and determine to which side correction must be made. Move the diverter valve to the cylinder that is behind, and move the control valve to the "Up" position until the base is even. To avoid excessive system pressure, do not over correct. Stop, return the diverter valve to the center position and continue to extend.

(19) Pin the monorail trolley slings to the tower section to be removed. Unbolt the lower portion of the tower ladder of the tower section to be removed and bolt it in its shipping position.

(20) Extend the cylinders resting the base on the climbing feet. Continue to extend, raising the machine approximately one inch (2.54cm) off the top of the tower.

CAUTION

To Avoid Damage To The Lifting Slings, Do Not Over Extend.

(21) Remove the 16 tower bolts at the bottom of the tower section to be removed.

(22) Before beginning the actual lowering, ensure that both the machine and the climbing frame are ready. A means of good communication is required. Use of two-way radios is recommended.

(23) Extend the climbing cylinders, raising the machine and the tower to be removed. There must be approximately 3-1/2 inches (9cm) clearance between the top of the remaining tower and the bottom of the tower to be removed.

(24) Roll the monorail trolley outward with the tower section to be removed attached, using the provided drive mechanism, until the removed tower is out 12 inches (30.48cm) past the remaining tower (12 inches [30.48cm] clearance between towers). Use care to avoid excessive jerking of the tower section while it is being trolleyed out.

CAUTION

To Avoid Excessive Loading In The Monorail Beam, At No Time Is The Hook Block To Rest On The Monorail With A Tower Suspended From The Monorail More Than 12 Inches (30.48cm) From The Existing Tower.

(25) Balance the machine again, using the balance procedure beginning with step 4 of the procedure.

CAUTION

It Is Extremely Important That The Machine Be Balanced Again At This Point To Avoid Possible Damage To The Climbing Cylinders.

(26) To begin lowering, move the directional control valve to the "Down" direction. To avoid system shock, avoid sudden movements of the directional control valve. Note the pressure gauge reading during lowering. A sudden increase in pressure indicates binding.

WARNING

During Climbing Or Lowering Operation, All Personnel Must Be Aware Of The Slow Relative Motion Between Large Structural Parts. Keep Head And Limbs Clear To Avoid Serious Injury.

(27) If there is a side wind during lowering, it is likely that the slide bars on the windward side of the climbing frame will rub on the tower. This is normal and can be ignored unless it causes binding. If binding or excess contact must be corrected, stop the lowering and determine to which side the machine must be moved. Move the diverter valve to the opposite side cylinder and hold it there. Move the control valve to the "Down" position and hold it until correction has been made. To avoid excessive system

pressure, do not over correct. Stop, return the diverter valve to the center position and continue the lowering.

WARNING

If At Any Time The Climbing Or Lowering Sequence Cannot Be Completed Due To Improper Functioning Of The Machine Or Climbing System, Return The Machine To The Existing Tower And Tighten The Connecting Bolts To Their Proper Values.

(28) Continue to lower the machine until the drift pins can be used to align the top existing tower bolt holes with the turntable bearing mounting base. Booming up or down or use of the diverter valve may be required to align the drift pins.

(29) To aid in installing all 16 bolts, maintain a slight clearance at the top of the tower. Once the bolts are installed, lower the turntable bearing mounting base to rest on the top of the tower. After installing all 16 top tower bolts, tighten them according to the recommended tower bolt tightening procedure described in Section 2 of this manual.

(30) The climbing base must rest on the angle brace. Extend or retract the climbing cylinders until there is a clearance between the cylinder rods and the base connecting pins. This is the storage position for the climbing base.

(31) To avoid pressurizing the hoses, the machine must be shut down before beginning this step. Since the hydraulics are no longer required, the hoses should be removed at this time. Disconnect the climbing hoses from the control panel quick disconnects and reconnect the bypass hose assembly under the winch housing. See Fig. 4-15.

Note: Steps (32) and (33) may be done simultaneously if possible.

(32) Restart the engine and boom up until the traveling counterweight trolleys can be unlatched. Overriding the boom upper limit may be required. Use extreme care to avoid damaging the boom and boom backstops. To avoid possible damage to the monorail beam, do not allow the main hoist line to tighten.

(33) Boom to the noted radius from step (4) and carefully raise the main hoist hook block off the monorail. Take care not to damage the monorail by over tightening the hoist line.

(34) Roll the trolley and the attached tower section to its latched position (18 feet [5.48m] radius for models 1500-1900, 24 feet [7.3m] for models 2300-2300B). Be sure that the trolley is latched. The trolley drive mechanisms must be in their stored positions when not in use.

(35) Release the swing brake.

(36) Remove the monorail beam rear connecting pin and lower the monorail and the tower as a unit to the ground. Maintain sufficient clearance between the existing tower and monorail. The connecting pin may stay in attaching bracket.

(37) Rest the removed tower section on the ground and unpin the monorail lifting slings.

(38) Lift the monorail clear of the removed tower section and set it on the ground.

(39) Disconnect the monorail from the hook block.

(40) Install the access ladder to the upper.

(41) Lowering completed.

Sequence of Lowering The Climbing Frame From The Turntable Bearing Mounting Base To The Tower Base

The climbing system must be assembled with the top climbing feet in their stowed position. See Fig. 4-12.

(1) Assemble the hydraulic power unit on the top climbing frame platform and connect the electric motor. Connect the hydraulic lines from the control panel to the power pack. See Fig. 4-9.

See the previous section "Sequence Of Raising The Climbing Frame From The Tower Base To The Turntable Bearing Mount" for hydraulic power unit preparation procedure.

(2) Retract the climbing cylinders until the bottom climbing feet can be rotated to their non-climbing position and install stop pins. See Fig. 4-4. Extend the cylinders approximately two feet (61cm) then retract the cylinders to the fully retract position.

CAUTION

If The Cylinders Do Not Extend Or Retract As Attempted, Stop, Do Not Continue. Contact Your Distributor Or The Factory.

Extend the climbing cylinders approximately 14 feet (4m) until the bottom feet can be rotated over the second horizontal tower angle. Rotate the bottom climbing feet to their climbing position and install the stop pins. Extend the cylinders until the weight of the climbing frame is supported by the bottom climbing feet.

CAUTION

If At Any Time When Extending The Climbing Cylinders The Climbing Base Slide Bars Begin Binding, Correct With The Diverter Valve Before Continuing.

(3) Remove the 24 bolts connecting the climbing frame side panels to the turntable bearing mounting base.

(4) To check the positive lock characterisitcs of the holding valve, perform a drift test as follows:
   (a) Retract the cylinders approximately one inch (25.4mm) and stop.
   (b) Observe the climbing frame for downward drift. During a 15 minute period, little or no drift should occur.

CAUTION

Be Alert For Any Drifting, Inability To Stop, Shaking Of The Climbing Frame Or Chattering From The Valves. If The Climbing System Does Not Operate Properly, Contact Your Distributor Or The Factory.

(5) Before the actual lowering, check the complete system for proper operation by lowering the frame approximately two feet (61cm). Begin by retracting the cylinders as slowly as possible for approximately three inches (8cm). Retract the cylinders at approximately one half speed for about one foot (30.48cm), then at full speed for one foot (30.48cm).

WARNING

During Climbing Or Lowering Operations, All Personnel Must Be Aware Of The Slow Relative Motion Between Large Structural Parts. Keep Head And Limbs Clear To Avoid Serious Injury.

(6) With both the top climbing feet in their stowed position (see Fig. 4-12) retract the climbing cylinders approximately 14 feet (4m) from the turntable bearing mounting base. When the top feet can be rotated over the second horizontal tower angle, pin the feet in their working position for extending or retracting the base assembly. See Fig. 4-14.

CAUTION

If At Any Time During Retracting The Side Panel, The Side Bars Begin Binding, Correct With The Diverter Valve Before Continuing.

(7) After the top feet are properly pinned, continue to retract the climbing cylinders. Lower the feet to rest on the horizontal tower angle to support the weight of the frame on the top feet. Continue retracting the cylinders until the bottom feet can be rotated.

(8) Rotate the bottom feet to their non-climbing position as shown in Fig. 4-4. Install the stop pins. Extend the climbing cylinders approximately 14 feet (4m). When the bottom feet can be rotated over the second horizontal tower angle, install the stop pins with the feet in their climbing position as shown in Fig. 4-4.

CAUTION

If At Any Time When Extending The Cylinders, The Climbing Base Slide Bars Begin Binding, Correct With The Diverter Valve Before Continuing.

(9) Extend the climbing cylinders and rest the weight of the climbing frame on the bottom climbing feet. Raise the top feet off the hoizontal tower angle. When the top feet can be rotated, pin them in their stowed position. See Fig. 4-12.

CAUTION

At All Times During Extending Or Retracting The Climbing Cylinders, The Appropriate Climbing Feet Must Be Properly Assembled And Resting Flat On Top Of The Correct Horizontal Tower Angle.

(10) Repeat steps (6) through (9) until the climbing frame reaches the base of the tower.

(11) At the tower base, locate supporting surfaces for the bottom climbing feet of the climbing base. Supporting surfaces must be level with each other and a minimum of three inches (76.2mm) above the top surface of the starting pads.

CAUTION

All Supporting Surfaces Must Be Of Sufficient Strength And Design To Support The Entire Weight Of The Climbing System. If The Initial Climb Was From A 40' (12.19m) Tower Section Or From Three 13'7-1/2" (3.9m-19cm) Tower Sections, The Temporary Supporting Surfaces Must Also Carry The Total Machine Weight. If The Initial Climb Was From Higher Than 40' (12.19m), The Horizontal Angle Bracing, At Its Strongest Point Where The Diagonals Come Together, Will Function As The Supporting Surfaces.

(12) Extend the climbing cylinders until the bottom climbing feet rest on the supports. Continue extending the cylinders, supporting the weight of the climbing frame on the bottom climbing feet and raising the top feet off the horizontal tower angle. When the top feet can be rotated, pin them in their stowed position. See Fig. 4-12.

(13) With the top feet in their stowed position, completely retract the climbing cylinders.

(14) Shut down the electrical power to the hydraulic power unit and disconnect the hydaulic lines to the control panel. See Fig. 4-9.

(15) After the electrical supply has been disconnected, remove the power unit from the climbing frame platform.

Sequence For Disassembling The Climbing Frame From The Tower Base

(1) The bottom climbing feet must be resting on supporting surfaces at the tower base. See Fig. 4-4. The climbing cylinders must be fully retracted. The supporting surfaces must be level with each other and must be a minimum of three inches (76.2mm) above the top surface of the starter pads.

CAUTION

All Supporting Surfaces Must Be Of Sufficient Strength And Design To Support The Entire Weight Of The Climbing System. See Charts A And B For Climbing Frame Weight. If The Initial Climb Was From A 40' (12.19m) Tower Section Or From Three 13-7-1/2" (3.9m-19cm) Tower Sections, The Temporary Supporting Surfaces Must Also Carry The Total Machine Weight. If The Initial Climb Was From Higher Than 40' (12.19m), The Horizontal Angle Bracing, At Its Strongest Point Where The Diagonals Come Together, Will Function As The Supporting Surfaces.

(2) Using tie downs as necessary, securely fasten the top of both side panels to the top of the tower to prevent falling or rocking or any excessive motion of the side panel.

CAUTION

The Entire Climbing System Weight Is Transmitted Through The Cylinder Rods To The Base Climbing Feet.

(3) Remove the rear platforms from both the upper and lower level platforms. See Fig. 4-1.
(4) Disconnect the hydraulic lines and remove the two roller beams from between the top end pads of the side panels. See Figs. 4-5 and 4-6.
(5) Remove the two tie beams from between the middle end pads of the side panels.
(6) Remove the two roller beams from between the bottom end pads of the side panels.
(7) Brace the climbing frame base as necessary to minimize any rocking motion during removal of the side panels.
(8) Unpin and remove the right hand and left hand side panels from the climbing base. See Fig. 4-3.
(9) Brace the climbing frame base as necessary to ensure that the base beams do not fall during disassembly.
(10) Remove the two base tie beams and the two base cylinder beams from the tower base.
(11) For models 1500 and 1900, if the machine will be operating with two parts of main hoist line near minimum radius, remove the climbing boom deflector roller if installed. The roller may remain on the boom for normal machine operation within the limits of the capacity charts for all other cases.

Monorail Beam And Counterweight Disassembly (TG2300-2300B)

Because of length, the monorail beam of the TG2300-2300B climbing system must be disassembled from the counterweight extension before truck transport. When disassembling, make sure to block securely under the monorail beam at both ends and under the counterweight extension. Do not consider the counterweight as sufficient blocking. When the connecting pins are removed, the monorail beam and counterweight extension can fall. See Fig. 4-25.

WARNING

Incorrect Disassembly Of Monorail And Counterweight Extension Connecting Pins May Result In Component Damage, Personal Injury Or Death. Before Removing Pins, Block Securely Under Both Sides Of Joint As Shown Below. Never Stand Under Assembly When Removing Pins.

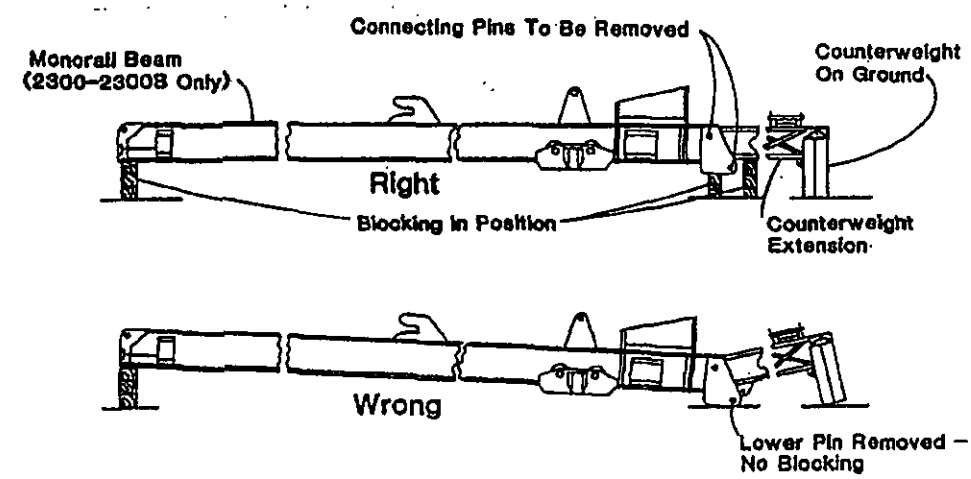

Note: Similar Condition Is Possible If Only Top Pins Are Removed With No Blocking

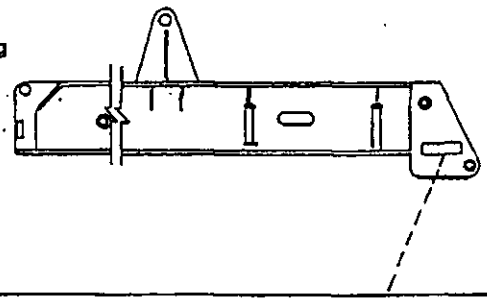

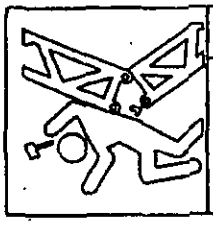

⚠DANGER

Avoid injury to yourself. Monorail beam and Counter-weight extension can fall when pins are removed. Do not remove pins until the monorail beam and counter-weight extension are supported properly by blocking as described in the operator's manual.

76A1022

Fig. 4-25
Monorail And Counterweight Disassembly (TG2300-2300B)

FT550-B

Chart A - Climbing System Weights For Job Site Assembly (TG1500-1900)

Description	Weight, Lbs. (kg)
Cylinder Base Tie Beam	2 @ 870 (395) each.
Base Cylinder Beam	2 @ 3,552 (1611) each
Left Hand Side Panel, With Cylinder Retracted And Filled With Oil, Hydraulic Lines And Fittings, Top Climbing Foot, Platforms, Braces, End Guards, Bolts And Nuts, Ladder And Control Panel.	1 @ 22,373 (10148)
Right Hand Side Panel, With Cylinder Retracted And Filled With Oil, Hydraulic Lines And Fittings, Top Climbing Foot, Platforms, Braces, End Guards, Bolts And Nuts.	1 @ 21,629 (9811).
Roller Beams	4 @ 1,353 (614) each.
Tie Beams W/O Connecting Bolts.	2 @ 1,093 (496) each.
Hydraulic Power Pack With 75 Gal. (285 Liters) Oil. (Empty Weight)	1 @ 1,200 (544). 629 (285)
Monorail Beam	1 @ 7,840 (3556)
Monorail Connecting Link And Pins.	106 (48)
Drift Pins - P/N 76A1265 (Climbing Frame) P/N 76A1092 (Tower)	4 @ 7.1 (3.2) 8 @ 7.9 (3.6)
Climbing Deflector Roller Assembly	1 @ 198 (90)

Chart B - Climbing System Weights For Job Site Assembly (TG2300-2300B)

Description	Weight, Lbs. (kg)
Cylinder Base Tie Beam	2 @ 1,150 (522) each.
Base Cylinder Beam	2 @ 4,415 (2,003) each
Left Hand Side Panel, With Cylinder Retracted And Filled With Oil, Hydraulic Lines And Fittings, Top Climbing Foot, Platforms, Braces, End Guards, Bolts And Nuts, Ladder And Control Panel.	1 @ 28,380 (12873)
Right Hand Side Panel, With Cylinder Retracted And Filled With Oil, Hydraulic Lines And Fittings, Top Climbing Foot, Platforms, Braces, End Guards, Bolts And Nuts.	1 @ 26,515 (12027)
Roller Beams	4 @ 1,850 (839) each.
Tie Beams	2 @ 1,590 (721) each.
Hydraulic Power Pack With 120 Gal. (456 Liters) Oil. (Empty Weight)	1 @ 2,600 (1179) 1,700 (771)
Monorail Beam	1 @ 10,527 (4775)
Monorail Connecting Link And Pins.	107 (48)
Drift Pins - P/N 76A1265 P/N 76A1092	4 @ 7 (3.2) each. 8 @ 7.9 (3.6) each.
Climbing Deflector Roller Assembly	1 @ 144 (65)

Chart C
Approximate Balance Radii (TG-1500)

Boom Length, Ft. (m)	Starting Main Hoist Radius, Ft. (m)	Boom Angle At Starting Radius
80 (24.4) *	85 (25.9)	0°
90 (27.4) *	95 (28.9)	0°
100 (30.5) *	90 (27.4)	32°
110 (33.5) *	85 (25.9)	44°
120 (36.6)	85 (25.9)	48°
130 (39.6)	80 (24.4)	55°
140 (42.7)	80 (24.4)	58°
150 (45.7)	75 (22.8)	62°
160 (48.8)	75 (22.8)	64°
170 (51.8)	70 (21.3)	68°
180 (54.9)	70 (21.3)	69°
190 (57.9)	65 (19.8)	72°
200 (60.9)	65 (19.8)	73°

WARNING

These Radii Are Approximate Balance Radii And Must Be Used In Conjunction With The Balancing Procedure. These Radii Are Averages And The Actual Balance Radius Will Most Likely Be Different. The Actual Balance Radius Must Be Used For Climbing Or Lowering Operations.

* With these boom lengths some machine configurations may not balance per the balancing procedure. If the machine will not balance (top rollers will not move off tower), contact your distributor or the factory.

Chart D
Approximate Balance Radii (TG-1900)

Boom Length, Ft. (m)	Starting Main Hoist Radius, Ft. (m)	Boom Angle At Starting Radius
80 (24.4) *	85 (25.9)	0°
90 (27.4) *	95 (28.9)	0°
100 (30.5) *	105 (32.0)	0°
110 (33.5) *	115 (35.0)	0°
120 (36.6) *	105 (32.0)	34°
130 (39.6)	100 (30.4)	43°
140 (42.7)	95 (28.9)	50°
150 (45.7)	95 (28.9)	53°
160 (48.8)	90 (27.4)	58°
170 (51.8)	90 (27.4)	60°
180 (54.9)	85 (25.9)	64°
190 (57.9)	85 (25.9)	65°
200 (60.9)	80 (24.3)	68°

WARNING

These Radii Are Approximate Balance Radii And Must Be Used In Conjunction With The Balancing Procedure. These Radii Are Averages And The Actual Balance Radius Will Most Likely Be Different. The Actual Balance Radius Must Be Used For Climbing Or Lowering Operations.

* With these boom lengths, some machine configurations may not balance per the balancing procedure. If the machine will not balance (top rollers will not move off the tower), contact your distributor or the factory.

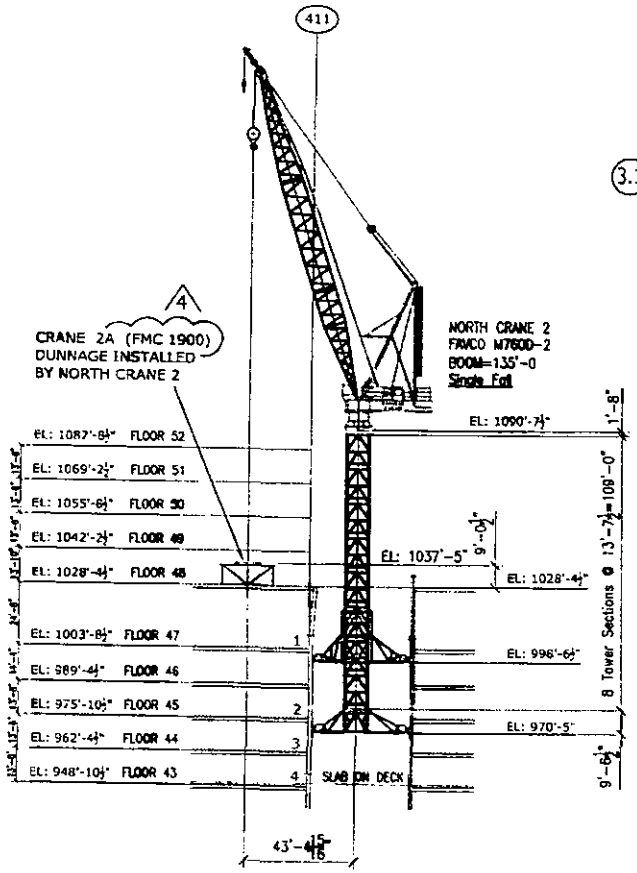

SEQ. #27

1. CRANE 1 & CRANE 2 JUMPED TO 47th. FLOOR.
2. CRANE 1 & CRANE 2 ERECT 48th. FLOOR.
3. CRANE 2A DUNNAGE INSTALLED BY NORTH CRANE 2

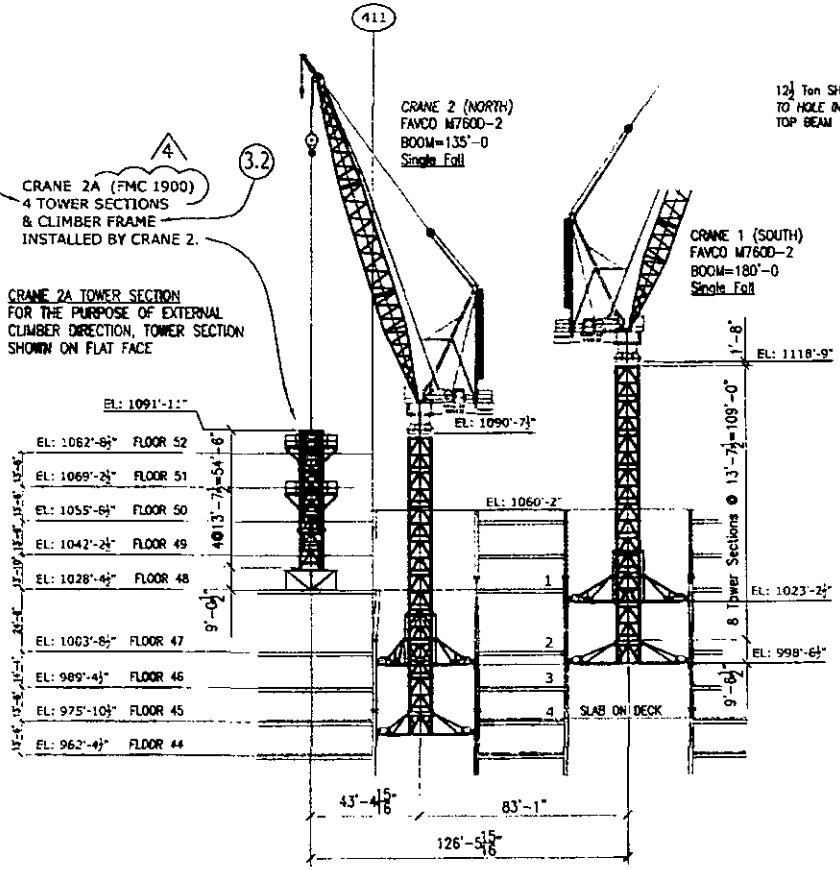

SEQ. #28

1. CRANE 1 JUMPED TO 48th. FLOOR.
2. CRANE 2 STAYS AT 47th. FLOOR
3. CRANE 2A - 4 TOWER SECTIONS & CLIMBER INSTALLED BY CRANE 2. (SEE 3.1 & 3.2)
4. CRANE 1 & CRANE 2 ERECT FLOORS 49 & 50.

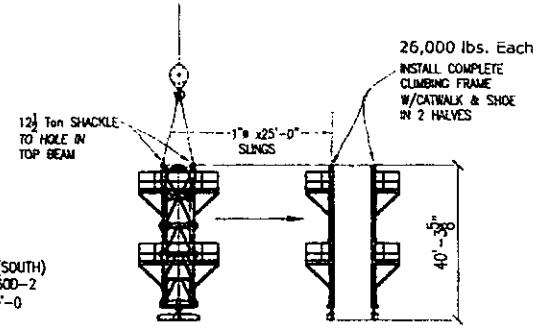

4

3.2 FMC 1900 Ext. CLIMBER
(SIM. RIGGING FOR EACH FRAME)

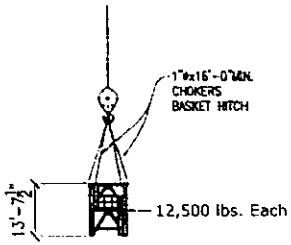

3.1 13'-7½ TOWER LIFTING

NY PERMIT LP0268

LICENSED PROFESSIONAL ENGINEER
J. JURIMAE
PROVINCE OF ONTARIO

NOV 15, 2011

ERECT FLOORS 48, 49, 50

WORK THIS DWG. WITH DWG. LP-37, LE-25.2

REV.	DATE	DESCRIPTION
4	Oct. 17/2011	CRANE 2A CORRECTED TO SHOW FMC 1900
3	Oct. 6/2011	CRANE 2 BOOM ANGLE DELETED
2	Oct. 4/2011	DWG. COMPLETELY REVISED PER DISCUSSION
1	Sep. 19/2011	CRANE #2A TC1900 , CO # & SRL # SHOWN
0	Sep. 14/2011	FOR APPROVAL

DCM Erectors, Inc.
DCM ERECTORS INC.
STRUCTURAL STEEL & MISCELLANEOUS METALS
77 Belfield Rd., Suite 100 Etobicoke, Ontario Canada M9W 1G6 Tel: (416) 241-4967 Fax: (416) 241-3239
110 East 42nd Street Suite 1710 New York, N.Y. 10017 Tel: (212) 599-1503 Fax: (212) 599-1615

PROJECT	WORLD TRADE CENTER TOWER 4
SITE	150 Greenwich Street, New York, N.Y.
CLIENT	TISHMAN CONSTRUCTION CORP.
TITLE	LOGISTIC ELEVATION FOR CRANE #2 & CRANE #2A
DRAWN	Sam Sep. 14/2011
DRAWING NO.	843
	LE-25.1 4

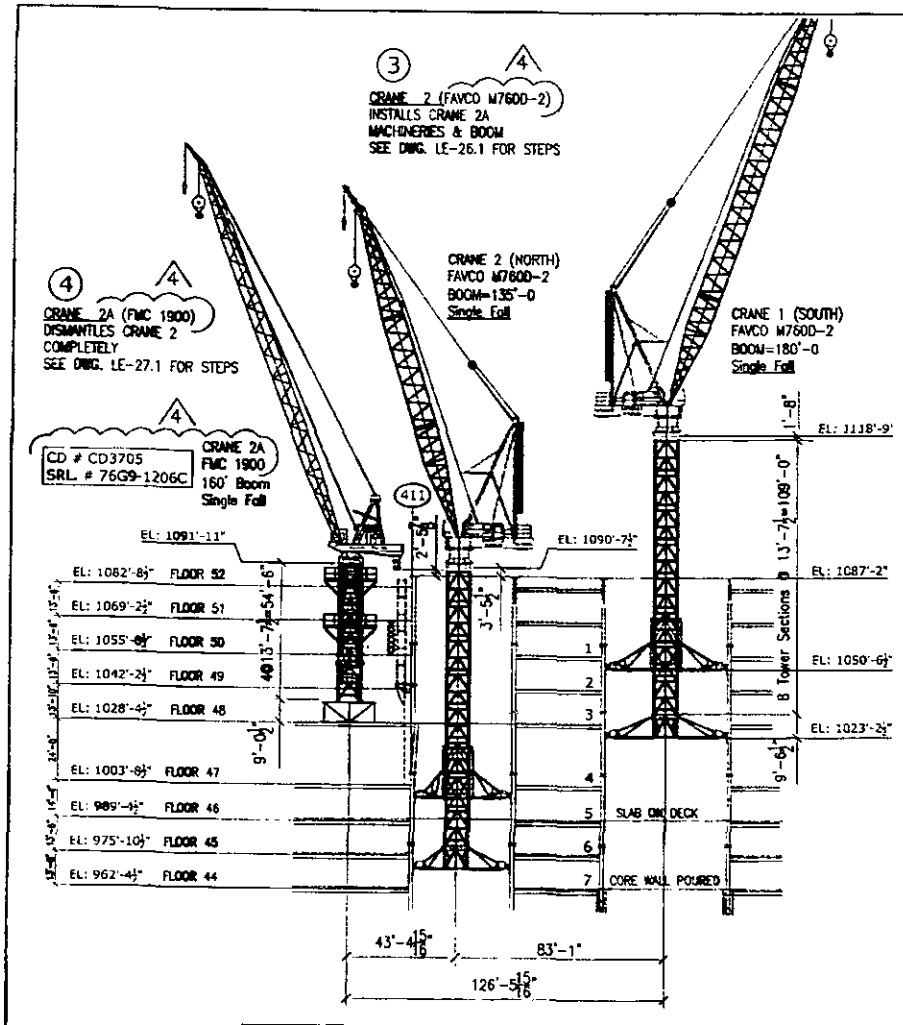

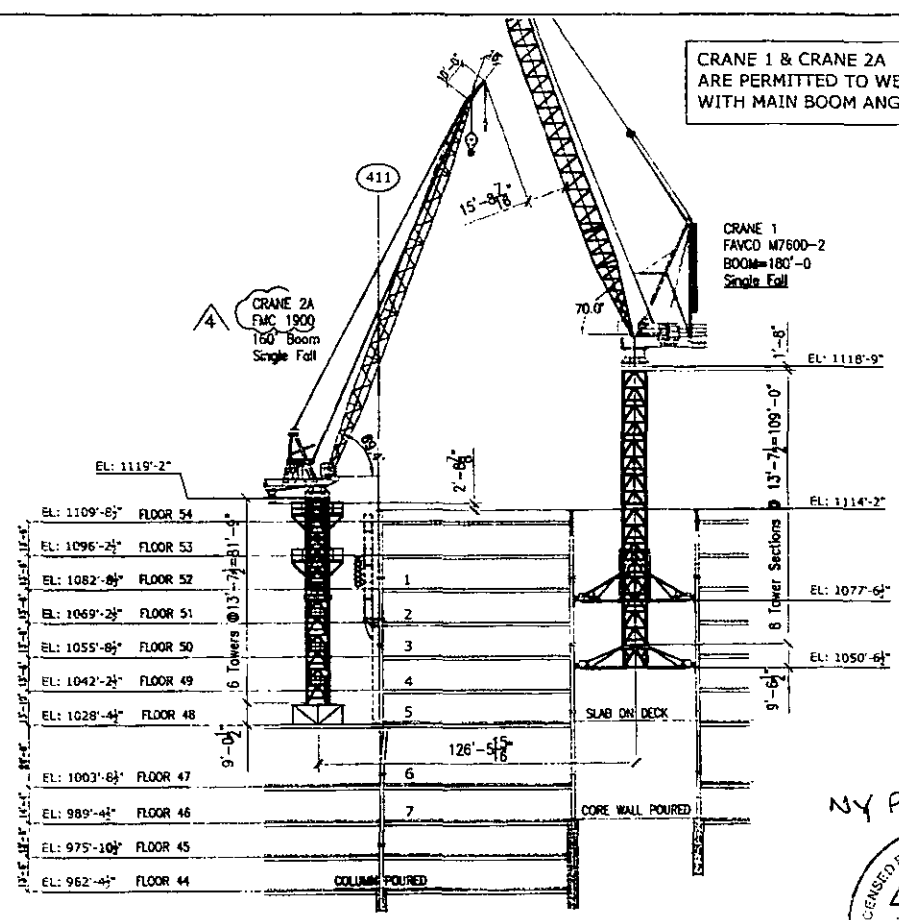

NY PERMIT LP0368

LICENSED PROFESSIONAL ENGINEER
JURIMAE
PROVINCE OF ONTARIO

NOV 19, 2011

SEQ. #29

1. CRANE 1 JUMPED TO 50th. FLOOR.
2. CRANE 2 STAYS AT 47th. FLOOR
3. CRANE 2 INSTALLS CRANE 2A MACHINERIES & BOOM (SEE DWG. LE-26.1 FOR STEPS)
4. CRANE 2A DISMANTLES CRANE 2 COMPLETELY (SEE DWG. LE-27.1 FOR STEPS)
5. CRANE 1 ERECTS FLOORS 51 & 52.

SEQ. #30

1. CRANE 1 JUMPED TO 52nd. FLOOR.
2. 2 MORE TOWER SECTIONS ADDED TO CRANE 2A.
3. CRANE 1 & CRANE 2A ERECT FLOORS 53 & 54

ERECT FLOORS 51, 52, 53, 54

WORK THIS DWG. WITH DWG. LP-37, LE-25.3

REV.	DATE	DESCRIPTION
4	Oct. 17/2011	CRANE 2A CORRECTED TO SHOW FMC 1900
3	Oct. 8/2011	REFERENCE DWG. SHOWN FOR STEP 3 & STEP 4
2	Oct. 4/2011	DWG. COMPLETELY REVISED PER DISCUSSION
1	Sep. 19/2011	CRANE #2A NUMBER OF TOWER SECTIONS REVISED
0	Sep. 14/2011	FOR APPROVAL

DCM Erectors, Inc.
DCM ERECTORS INC.
STRUCTURAL STEEL & MISCELLANEOUS METALS
17 Belfield Rd., Suite 100, Etobicoke, Ontario, Canada M9W 1G6, Tel: (416) 241-6967, Fax: (416) 243-3239
110 East 42nd Street, Suite 1710, New York, N.Y. 10017, Tel: (212) 599-1903, Fax: (212) 599-1815

PROJECT:	WORLD TRADE CENTER TOWER 4
SITE:	150 Greenwich Street, New York, N.Y.
CLIENT:	TISHMAN CONSTRUCTION CORP.
TITLE:	LOGISTIC ELEVATION FOR CRANE #1 & CRANE #2A
SCALE:	
DRAWN:	Sam Sep. 14/2011
CHECKED:	
DRAWING No.	LE-25.2
REV.	4

CRANE #2
UPPERWORKS IS TO BE POSITIVELY SLEW LOCKED WITH MAIN BOOM LENGTH SQUARE TO NORTHEAST MAST FACE
(ie. BOOM IS POINTING PLAN NORTHEAST)
AND MAIN HOOK AT MAXIMUM 130 Foot. RADIUS. (18° BOOM ANGLE TO HORIZONTAL.)

4

CRANES #1, 2 & 2A
OUT OF SERVICE LOGISTICS

REV.	DATE	DESCRIPTION
4	Dec. 12/2011	CRANE 2 BOOM SLEW LOCKED POINTING NORTH EAST
3	Dec. 9/2011	NOTE ADDED FOR STORM CASE (WIND OVER 30 mph)
2	Dec. 9/2011	CRANE 2A REVISED FOR 4 TOWER SECTIONS
1	Nov. 9/2011	CRANE 2A REVISED FOR 7 TOWER SECTIONS
0	Oct.31/2011	CRANE 2A WITH 8 TOWER SECTIONS

PROJECT: WORLD TRADE CENTER - TOWER 4
SITE: 150 GREENWICH STREET, NEW YORK, N.Y.
CLIENT: TISHMAN CONSTRUCTION CORP
TITLE: CRANES OUT OF SERVICE LOGISTICS FOR CRANES #1, 2 & 2A
CONTRACT NO. 843
DRAWING NO. LE-25.2A

DCM Erectors, Inc.
STRUCTURAL STEEL & MISCELLANEOUS METALS
77 Bedford Rd., Suite 100 Eastchester, Bronx New York 10709 Tel: (718) 231-0867 Fax: (718) 231-3039
110 East 42nd Street Suite 1700 New York, N.Y. 10017 Tel: (212) 599-1603 Fax: (212) 599-1615

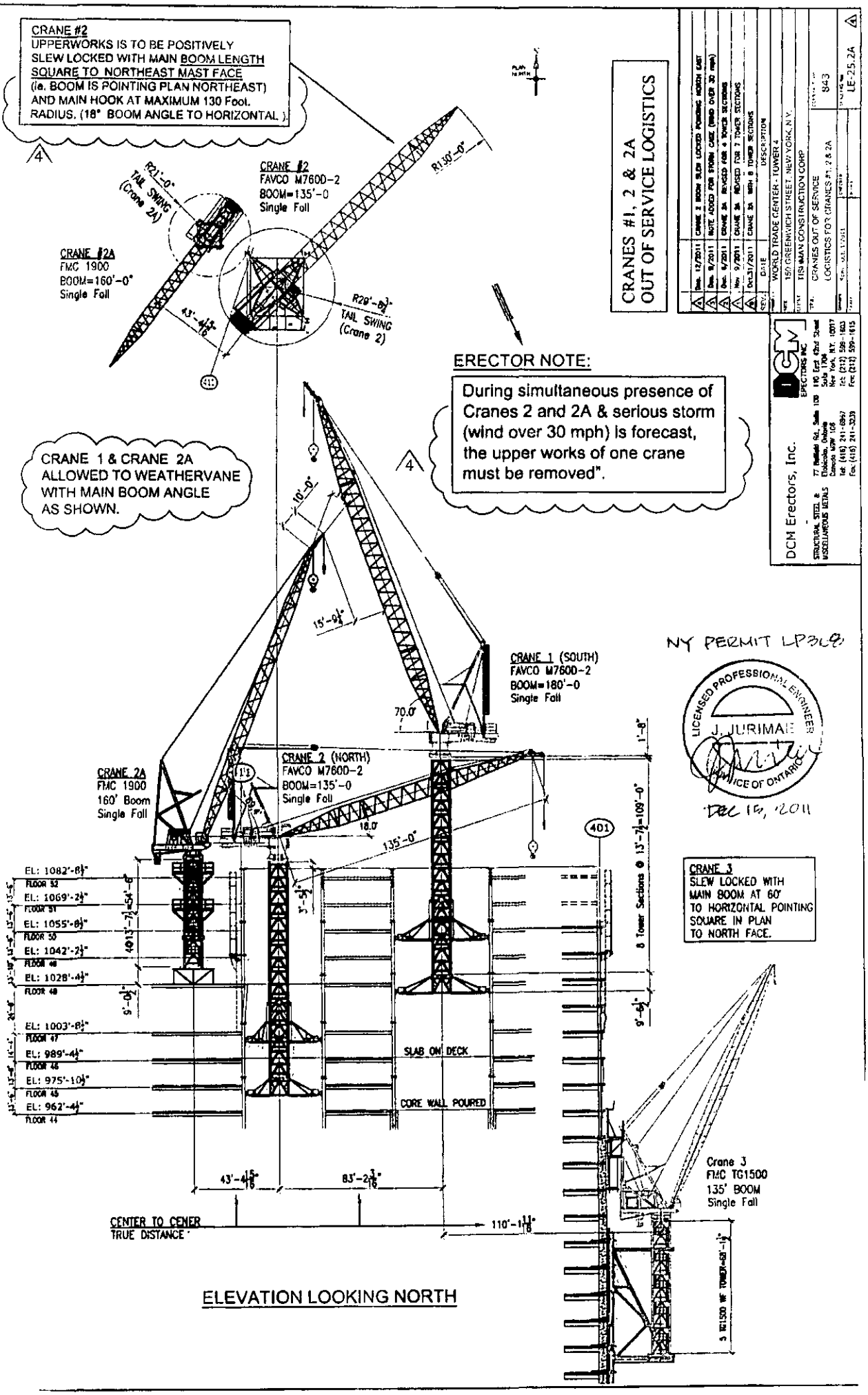

NY PERMIT LP3L8

LICENSED PROFESSIONAL ENGINEER
J. JURIMAE
PROVINCE OF ONTARIO

DEC 15, 2011

CRANE 3
SLEW LOCKED WITH MAIN BOOM AT 60° TO HORIZONTAL POINTING SQUARE IN PLAN TO NORTH FACE.

ELEVATION LOOKING NORTH

CRANE #1 & CRANE #2A
ARE PERMITTED TO WEATHERVANE
WITH MAIN BOOM ANGLE AS SHOWN.

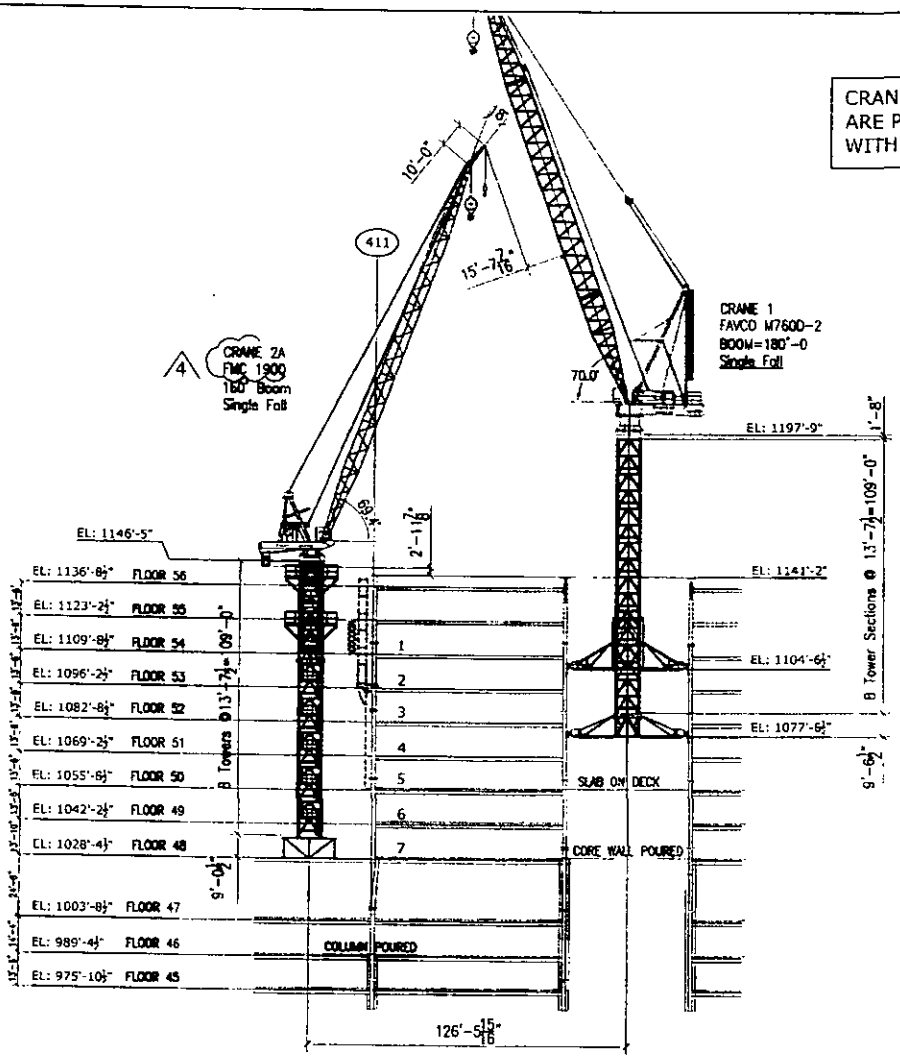

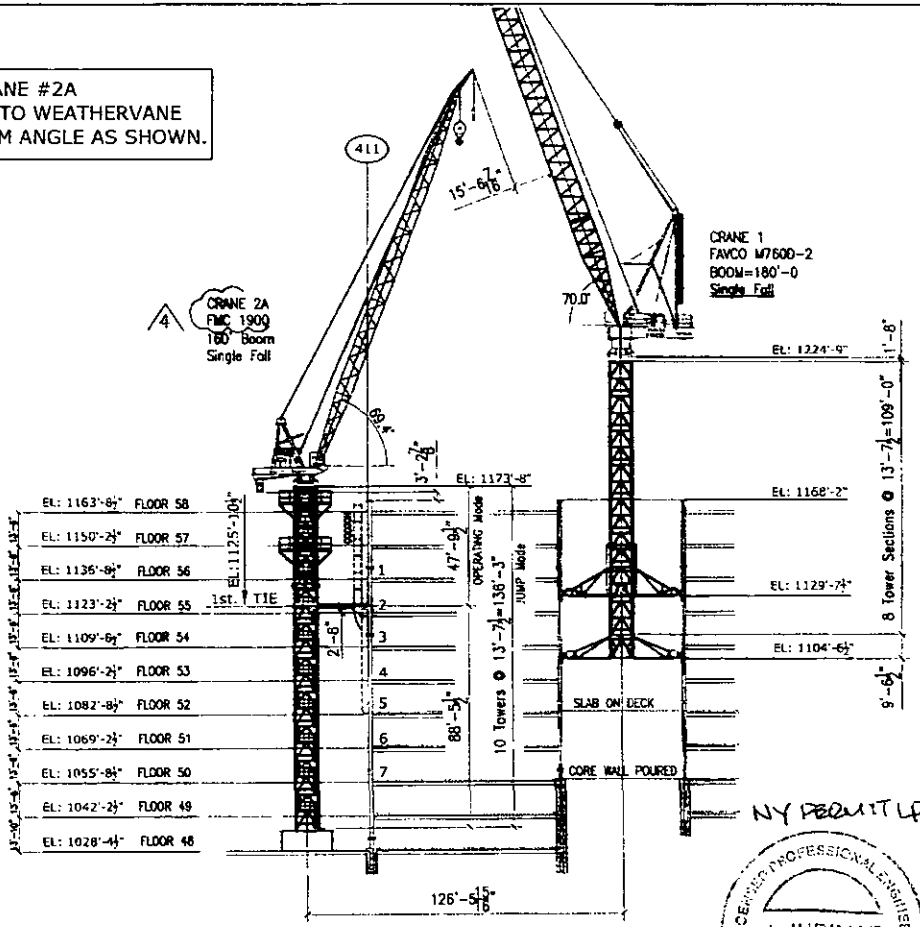

NY PERMIT LP0368

LICENSED PROFESSIONAL ENGINEER
J. JURIMAE
PROVINCE OF ONTARIO
NOV 19, 2011

SEQ. #31

1. CRANE 1 JUMPED TO 54th. FLOOR.
2. 2 MORE TOWER SECTIONS ADDED TO CRANE 2A.
3. CRANE 1 & CRANE 2A TO ERECT FLOORS 55 & 56

SEQ. #32

1. CRANE 1 JUMPED TO 56th. FLOOR.
2. 2 MORE TOWER SECTIONS ADDED TO CRANE 2A.
3. CRANE 2A - INSTALL TOWER 1st. TIE @ EL: 1125'-10½
4. CRANE 1 & CRANE 2A TO ERECT FLOORS 57 & 58

ERECT FLOORS 55, 56, 57, 58

WORK THIS DWG. WITH DWG. LP-37, LE-25.4

REV.	DATE	DESCRIPTION
4	Oct. 17/2011	CRANE 2A CORRECTED TO SHOW FMC 1900
3	Oct. 8/2011	SEQ. #32 CRANE 2A TOWER TIE LOCATION REVISED
2	Oct. 5/2011	DWG. COMPLETELY REVISED PER DISCUSSION
1	Sep. 19/2011	CRANE #2A NUMBER OF TOWER SECTIONS REVISED
0	Sep. 14/2011	FOR APPROVAL

DCM Erectors, Inc.
DCM ERECTORS INC
STRUCTURAL STEEL & MISCELLANEOUS METALS
77 Driffield Rd., Suite 100, Etobicoke, Ontario, Canada M9W 1G6, Tel: (416) 241-6967, Fax: (416) 241-1729
110 East 42nd Street, Suite 1718, New York, N.Y. 10017, Tel: (212) 599-1803, Fax: (212) 599-1615

PROJECT:	WORLD TRADE CENTER TOWER 4
SITE:	150 Greenwich Street, New York, N.Y.
CLIENT:	TISHMAN CONSTRUCTION CORP
TITLE:	LOGISTIC ELEVATION FOR CRANE #1 & CRANE #2A
DCM JOB NO.	843
DRAWN:	Sep 14/2011
CHECKED:	
SCALE:	
DRAWING NO.	LE-25.3 4

CRANE 1 & CRANE 2A
ARE PERMITTED TO WEATHERVANE
WITH MAIN BOOM ANGLE AS SHOWN.

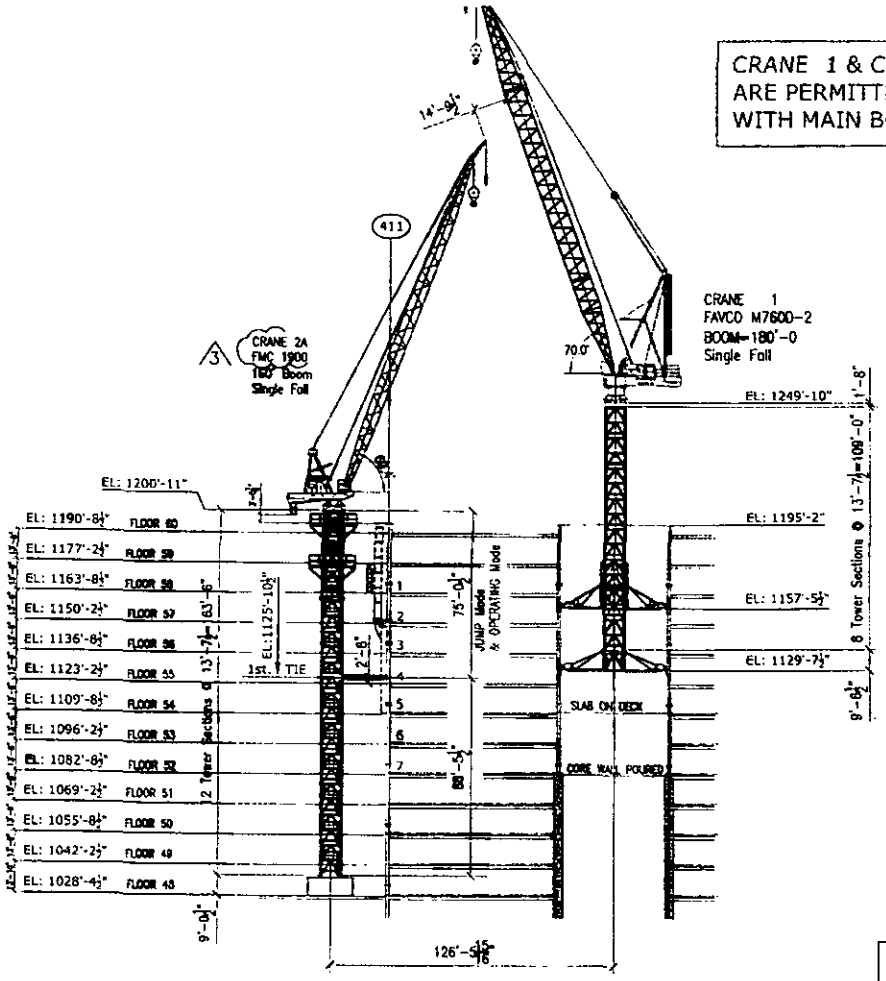

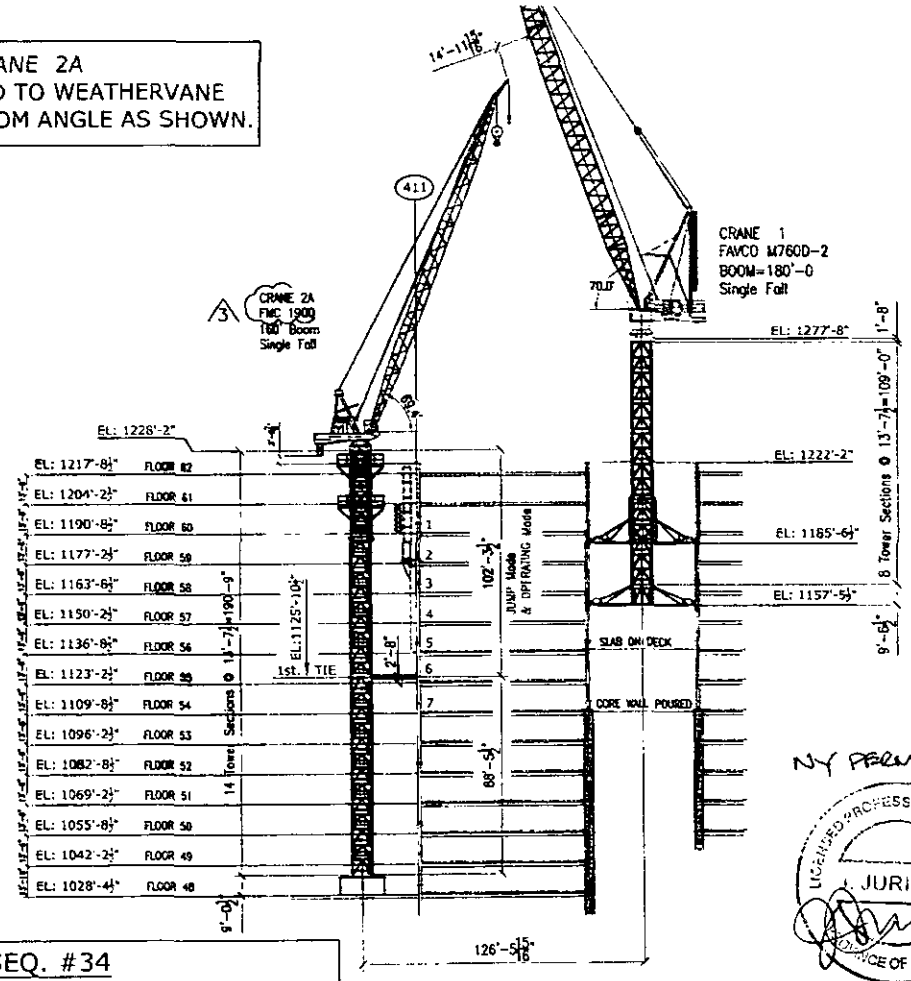

SEQ. #33

1. CRANE 1 JUMPED TO 58th. FLOOR.
2. 2 MORE TOWER SECTIONS ADDED TO CRANE 2A.
3. CRANE 1 & CRANE 2A ERECT FLOORS 59 & 60.

SEQ. #34

1. CRANE 1 JUMPED TO 60th. FLOOR.
2. 2 MORE TOWER SECTIONS ADDED TO CRANE 2A.
3. CRANE 1 & CRANE 2A ERECT FLOORS 61 & 62.

NY PERMIT LP03468

LICENSED PROFESSIONAL ENGINEER
J. JURIMAE
PROVINCE OF ONTARIO

Nov 15, 2011

ERECT FLOORS 59, 60, 61, 62

WORK THIS DWG. WITH DWG. LP-37, LE-25.5

REV.	DATE	DESCRIPTION
3	Oct. 17/2011	CRANE 2A CORRECTED TO SHOW FMC 1900
2	Oct. 6/2011	CRANE 2A TOWER TIE LOCATION REVISED
1	Sep. 19/2011	CRANE 2A NUMBER OF TOWER SECTIONS REVISED
0	Sep. 14/2011	FOR APPROVAL

DCM Erectors, Inc.

STRUCTURAL STEEL & MISCELLANEOUS METALS

77 Bloor St., Suite 100, Etobicoke, Ontario, Canada M9W 1G6, Tel: (416) 241-0907, Fax: (416) 241-3239

110 East 42nd Street, Suite 1710, New York, N.Y. 10017, Tel: (212) 599-1663, Fax: (212) 599-1615

PROJECT	WORLD TRADE CENTER TOWER 4
SITE	150 Greenwich Street, New York, N.Y.
CLIENT	FISHMAN CONSTRUCTION CORP.
TITLE	LOGISTIC ELEVATION FOR CRANE #1 & CRANE #2A
CONTRACT No.	843
DRAWN	Sam Sep 14/2011
DRAWING No.	LE-25.4

CRANE #1 & CRANE #2A
ARE PERMITTED TO WEATHERVANE
WITH MAIN BOOM ANGLE AS SHOWN.

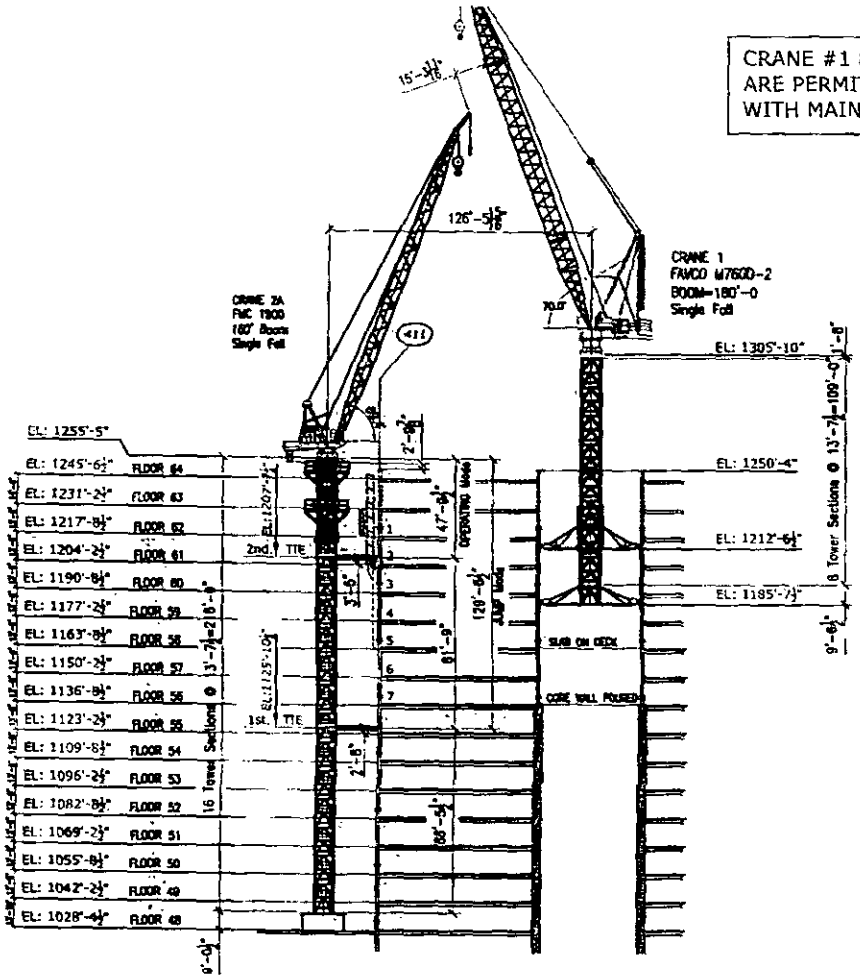

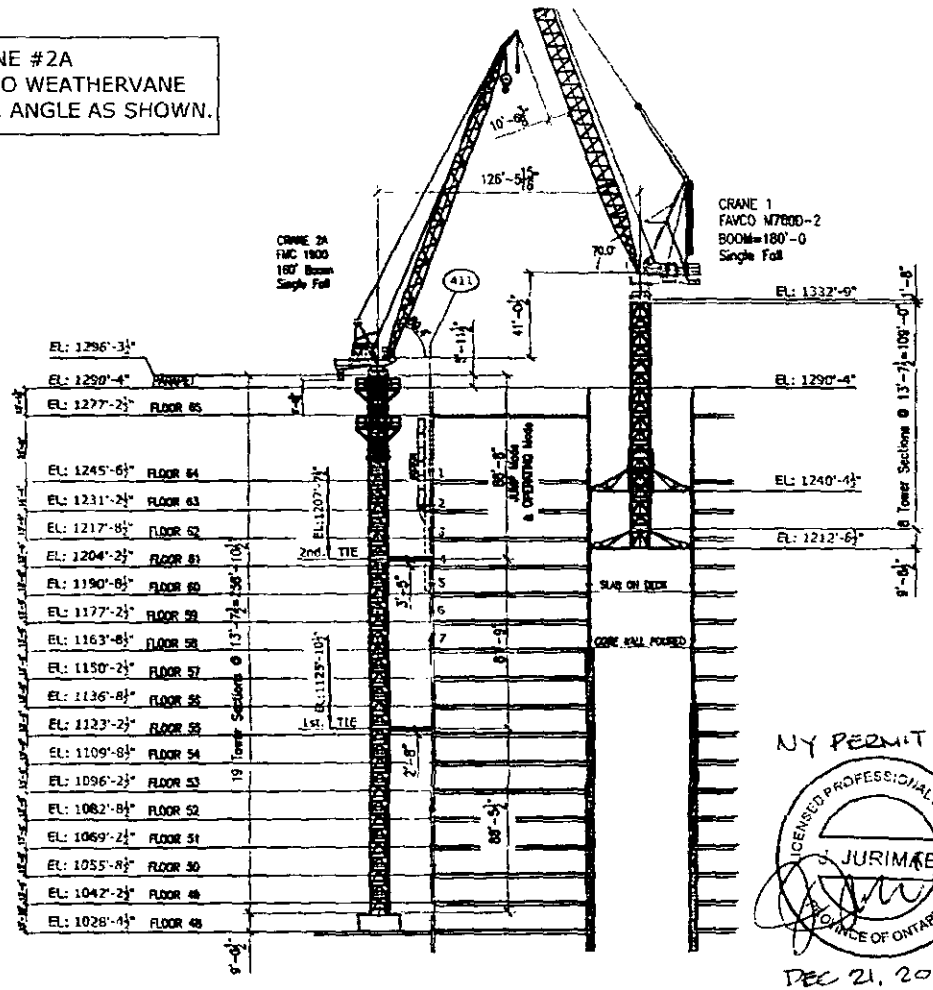

NY PERMIT LP368

LICENSED PROFESSIONAL ENGINEER
J. JURIMAE
PROVINCE OF ONTARIO

DEC 21, 2011

SEQ. #35

1. CRANE 1 JUMPED TO 62nd. FLOOR.
2. 2 MORE TOWER SECTIONS ADDED TO CRANE 2A.
3. CRANE 2A - INSTALL TOWER 2nd. TIE @ EL: 1207'-7½
4. CRANE 1 & CRANE 2A TO ERECT FLOORS 63 & 64.

SEQ. #36

1. CRANE 1 JUMPED TO 64th. FLOOR.
2. 3 MORE TOWER SECTIONS ADDED TO CRANE 2A.
3. CRANE 1 & CRANE 2A TO ERECT FLOORS 65.

ERECT FLOORS 63, 64, 65

WORK THIS DWG. WITH DWG. LP-37,LE-25.6

REV	DATE	DESCRIPTION
4	Dec. 21/2011	SEQ. #35 NOTE ADDED FOR INSTALLATION OF 2nd. TIE
3	Oct. 17/2011	CRANE 2A CORRECTED TO SHOW FMC 1900
2	Oct. 8/2011	CRANE 2A TOWER TIE LOCATION REVISED
1	Sep. 19/2011	CRANE #2A NUMBER OF TOWER SECTIONS REVISED
0	Sep. 14/2011	FOR APPROVAL

DCM Erectors, Inc.

DCM ERECTORS INC

STRUCTURAL STEEL & MISCELLANEOUS METALS

77 Belfield Rd., Suite 109, Etobicoke, Ontario, Canada M9W 1G6, Tel: (416) 241-5967, Fax: (416) 241-3239

110 East 42nd Street, Suite 1710, New York, N.Y. 10017, Tel: (212) 599-1623, Fax: (212) 599-1615

WORLD TRADE CENTER TOWER 4

150 Greenwich Street New York, N.Y.

TISHMAN CONSTRUCTION CORP.

LOGISTIC ELEVATION
FOR CRANE #1 & CRANE #2A

843

LE-25.5 4

CRANE #1 & CRANE #2A
ARE PERMITTED TO WEATHERVANE
WITH MAIN BOOM ANGLE AS SHOWN.

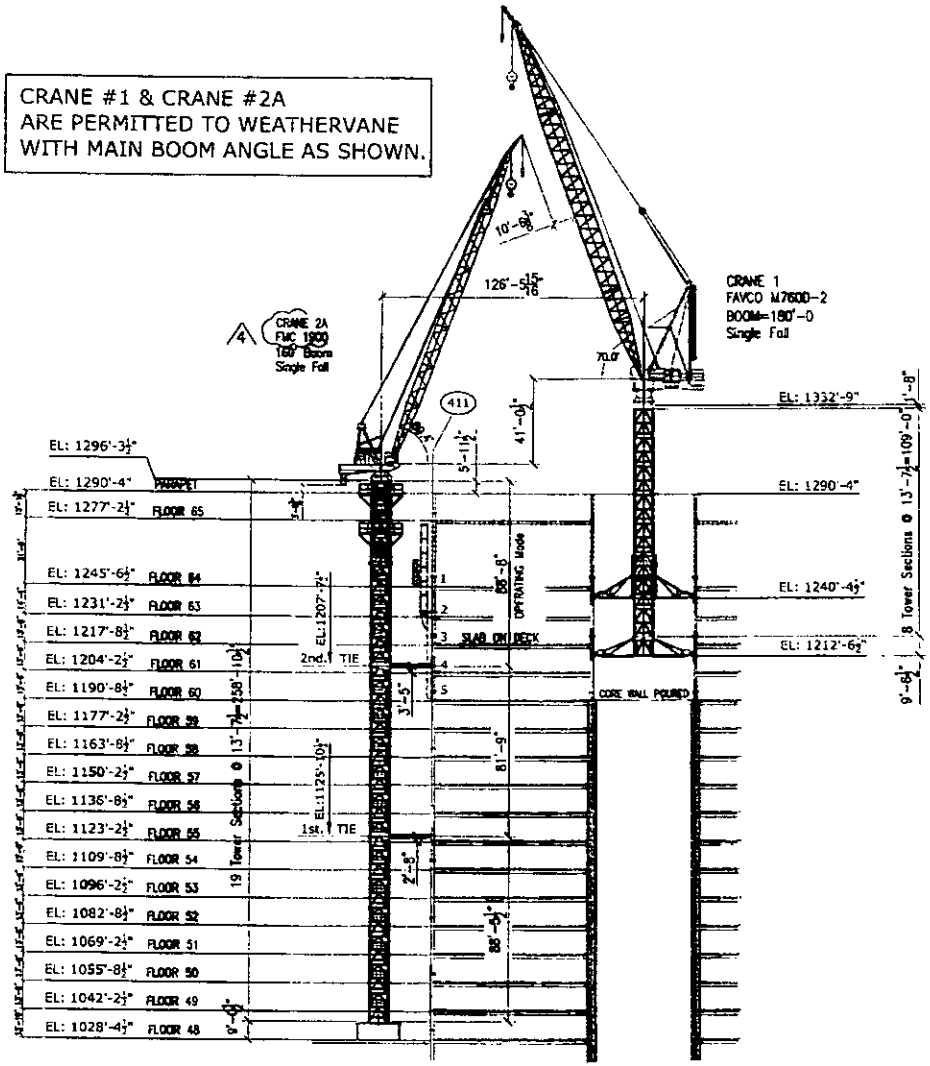

NY PERMIT LP0368

LICENSED PROFESSIONAL ENGINEER
J. JURIMAE
PROVINCE OF ONTARIO

NOV 15, 2011

ERECT FLOORS 65, 66 (ROOF) & PARAPET

WORK THIS DWG. WITH DWG. LP-37

SEQ. #36

1. CRANE 1 STAYS AT 64th. FLOOR.
2. CRANE 1 & CRANE 2A CONTINUE ERECTING FLOORS 65, 66 (ROOF) & PARAPET.

REV.	DATE	DESCRIPTION
4	Oct. 17/2011	CRANE 2A CORRECTED TO SHOW FMC 1900
3	Oct. 8/2011	CRANE 2A TOWER TIE LOCATION REVISED
2	Oct. 5/2011	DWG. UPDATED FOR FINAL STAGE
0	Sep. 19/2011	FOR APPROVAL

DCM Erectors, Inc.
DCM ERECTORS INC.
STRUCTURAL STEEL & MISCELLANEOUS METALS
77 Belfield Rd., Suite 103, Etobicoke, Ontario, Canada M9W 1G6, Tel: (416) 241-6967, Fax: (416) 241-3339
110 East 42nd Street, Suite 1710, New York, N.Y. 10017, Tel: (212) 599-1633, Fax: (212) 599-1615

PROJECT	WORLD TRADE CENTER TOWER 4
SITE	150 Greenwich Street, New York, N.Y.
CLIENT	TISHMAN CONSTRUCTION CORP.
TITLE	LOGISTIC ELEVATION FOR CRANE #1 & CRANE #2A
DRAWN	Sam Sep. 19/2011
CHECKED	
SCALE	
FOREMAN	
DRAWING NO.	843
	LE-25.6 4

NYC BUILDINGS

Crane / Derrick and Work Platform Plumbness And Torque Notification/ Anchor Bolt Pull Out Test

Please file 2 Copies
Application Must Be Typewritten

1. Location of Job

Borough: Manhattan

House No.(s): 150 Street Name: Greenwich

Special Place Name: WTC - Transit Hall - West Tower Crane

2. Crane / Work Platform Information

Maufacturer: FMC Link-Belt Model No.: TG 1900 C.D. No : 3705 C.N. No :

✓ Luffing Boom: | Horizontal Boom | Articulating Jib | Other:

Tower Crane: | External Climbing Crane | Internal Climbing Crane | Work Platform: | Single Mast | Double Mast

3. Surveyor's Information

Last Name: CONKLIN First Name: JOHN M.I.:

Business Name: DCM Erectors, Inc Telephone: (212) 599-1603 Fax: (212) 599-1615

Address: 110 East 42nd St., Suite 1704

City: New York State: NY Zip: 10017

This is to Certify that I have measured the out of plumbness for 6 tower sections of the above crane with a tower height of 81' feet 8" inches. The lean towards the following directions indicated below was determined to be:

1/8 inches East/West (Direction); 1/8 inches North/South (Direction);

Signature Date 02/09/12 Date of Survey 02/09/12

4. Tower / Mast Bracing Anchor Bolt Pull-out Test

Testing Laboratory: Telephone: Fax:

Address:

City: State: Zip:

Person Performing test: Title: Lic. No.: State:

I, the undersigned, am a P.E., R.A., or qualified technican of the above testing laboratory. I have performed / witnessesed the anchor bolt pull-out test for bracing support of above hoisting equipment installation. I hereby certify that the anchors safely sustained the test pull without failure.

Location	Elev. / Floor	# Tested / Total # of Anchors	Wall Construction	Attachment Type	Bolt Size	Test Load	Design Load
1		/					
2		/					
3		/					
4		/					
5		/					

Signature Date Date of Survey

5. Supervisor's Statement

Last Name: Vanhees First Name: Arnold M.I.:

Business Name: DCM Erectors, Inc. Telephone: (212) 599-1603 Fax: (212) 599-1615

Address: 110 East 42nd St., Suite 1704

City: New York State: NY ZIP: 10017

This is to certify that the above installed Six sections were torqued to Turn of the nut method ft. lbs on _____ by iron workers under my supervision. The manufacturer's recommended bolt-torque value is _____ ft. lbs. The Manufacturer's allowable out of plumbness is: 1"/1200" inches East/West (Direction); 1"/1200" inches North/South (Direction);

Signature of Licensed Rigger Date 02-09-12

CD-6 Rev. 12/03

4WTC TC #2A (NORTH)
CD # 3705
JUMP # 1 (SEQ #30 ON DRG LE252
DATE OF JUMP: 02/09/12

This form is to be used immediately before you proceed with the jump. One final check

PG 01/02

PRE-JUMP CHECK LIST

			Responsibility of
Visual check of all hydraulics	Levels		CJP
	Hose Connection	Leaks	✓
	Hose condition	Cracks/Leaks	✓
Crane Bay	Clear	Safety Nets	✓
		Air hoses	✓
		Torch Hoses	✓
		Deck Projection	✓
		Other Projections	✓
Tower Crane	Not hoisting		✓
	Weathervane	Boom down wind	✓
	Balanced	One CWT off	✓
		One CWT on hook	✓
Fall protection	Platform	Perimeter cables	✓
	Structure (crane bay)	Perimeter cables	✓
Tie Downs or Yokes	Bolts	Loosened but not removed	✓
Dogs	Lifting Ring	Unlocked position	✓
	Upper basket	Unlocked position	✓
All workers positioned	2 in Lifting ring		✓
	2 in upper basket		✓
	2 in lower basket		✓

02/09/12

PG 02/02

This check list should be used 3 to 4 days prior to the jump.

VISUAL INSPECTION – PREPARING FOR JUMP

			Good	Repair/Replace
Pony Motor	Fuel Tank	Proper level	✓	
		Leaks	✓	
	Engine	Operating Condition	✓	
	Oil	Proper Level	✓	
Hydraulic Tank		ProperLevel	✓	
		Leaks	✓	
Hydraulic Hoses		Leaks	✓	
		Cracks	✓	
		Kinks	✓	
		Fitting/Clips	✓	
Hydraulic Cylinder	Main	Leaks		
		Bends/Kinks	✓	
	Outriggers	Leaks	✓	
		Bends/Kinks	✓	
Hand Rails	Lifting Ring	Bent	✓	
		Complete	✓	
	Upper basket	Bent	✓	
		Complete	✓	
	Lower Basket	Bent	✓	
		Complete	✓	
Work Platform	Lift Ring	Grating	✓	
	Upper Platform	Grating	✓	
	Lower Basket	Grating	✓	

02/09/12

DCM ERECTORS INC.

110 East 42nd Street Suite 1710
New York, NY 10017
United States of America

Phone: (212) 599 – 1603
Fax: (212) 599 – 1615

TOWER CRANE - SAFETY MEETING

Date: 2/9/12

Foreman: John Long.

Project Name: WTC – Tower 4

Project Location: WTC, New York

TOPICS	COMMENTS FROM WORKERS
Pre-Jump Safety Meeting	
Tower Crane #2A (North)	

NAME (Please Print)	SIGNATURE
RB Knudson TCC	
John Long	
[illegible]	
Ed [illegible]	
Cam McPartland	
Jeff Birdsall	
Tim Long	
Joe Milosevic	
ARNOLD VAN HEES	

Meeting Held by:

(Signature)

JOHN LONG

(Print Name)

Send copy to: Main Office, and General Contractor

Means & Method – JUMP CRANE 2A

Date: **December 16, 2011** Revision **15 17**

WORLD TRADE CENTER-TOWER FOUR, New York, NY – Contract 843-000

Bryan Brady II
Apprentice Coordinator

HODCARRIERS LOCAL 46 & 261
APPRENTICE & TRAINING FACILITY

August 13, 2009

To Whom It May Concern:

The following is a list of Journey who have taken their Tower Crane safety certifications. If you have any questions, please feel free to contact us.

FIRST	LAST	DATE
Mario	Bargellini	3/23/2009
Larry	Barnett	2/28/2009
Jeff	Birdsall	2/28/2009
James	Brady	4/25/2009
Jelani	Brown	4/25/2009
Billy	Jacobs	1/17/2009
Keith	O'Brien	4/25/2009
Kevin	Scally	4/25/2009
Ed	Tedesco	1/17/2009

Sincerely,

Bryan Brady II

Bryan Brady II
Apprentice Coordinator

35-23 36th Street . Astoria, New York 11106 . Tel: (718) 433-4195 . Fax (718) 433-1187

Gary Holder

THIS CERTIFIES THAT

Gary Holder

HAS SUCCESSFULLY COMPLETED THE TRAINING REQUIREMENTS SET FORTH BY OSHA STANDARDS 1926.750 THROUGH .761 **SUBPART R, STEEL ERECTION**

GENERAL PRESIDENT — 8/22/07 DATE — INSTRUCTOR

Lead Hazard Training For IRONWORKERS

Name: Gary J Holder
Course: Lead Hazard
Hours: 32
Issues: 2/17/2008
Cert No: 0171-0208-W

29 CFR PART 62
Interim Lead Standard
For Construction

THIS CERTIFIES THAT
Gary Holder
HAS SUCCESSFULLY COMPLETED THE IRONWORKERS OSHA **10** HOUR CONSTRUCTION WORKER STANDARDIZED SAFETY AND HEALTH TRAINING COURSE
DATE **8/23/07**

Joseph J. Hunt
General President

OSHA Occupational Safety and Health Administration

WK 0015874

This acknowledges that

Gary Holder Jr.

has successfully completed

Course #:7600 - Disaster Site Worker (16-Hour)

This course emphasizes awareness of the safety and health hazards that may be encountered at natural or man-made disaster sites, as well as the importance of personal protective equipment, decontamination, and incident command participation.

Trainer — 1/31/09 Completion Date

THIS CERTIFIES THAT
Gary Holder

Has successfully completed the N.Y.C. D.O.B. recognized **Scaffold Safety Training Course**

Joint Apprentice Committee
Ironworkers Local 40 & 361
35-23 236th Street
Astoria, NY 11106

Instructor — **Certificate #** IWAT 6102 — **Date:** 12/13/08

THIS IS NOT A RIGGERS LICENSE

Gary Holder Jr.

Has successfully completed the N.Y.C. D.O.B. recognized Tower Crane Safety Course

Joint Apprentice Committee
Ironworkers Local 40 & 361
35-23 36th Street
Astoria, NY 11106

Instructor — **Issued:** 2/20/10 — **Expires:** 2/20/13

Colm McPartland

Has successfully completed the N.Y.C. D.O.B.
recognized Tower Crane Safety Course

Joint Apprentice Committee
Ironworkers Local 40 & 361
35-23 36th Street
Astoria, NY 11106

Instructor

Issued: 2/28/09
Expires: 2/28/12

John Long Jr.

Has successfully completed the N.Y.C. D.O.B.
recognized **Tower Crane Safety Course**

Joint Apprentice Committee
Ironworkers Local 40 & 361
35-23 36th Street
Astoria, NY 11106

Instructor

Issued: 12/17/11
Expires: 12/17/14

Timothy Long

Has successfully completed the N.Y.C. D.O.B
recognized Tower Crane Safety Course

Joint Apprentice Committee
Ironworkers Local 40 & 361
35-23 236th Street
Astoria, NY 11106

Instructor

Issued: 2/28/09
Expires: 2/28/12

THIS CERTIFIES THAT
Timothy Long
HAS SUCCESSFULLY COMPLETED
THE IRONWORKERS
OSHA 10 HOUR CONSTRUCTION
WORKER STANDARDIZED SAFETY
AND HEALTH TRAINING COURSE
DATE **6/27/09**

Joseph J. Hunt
General President

THIS CERTIFIES THAT
Timothy Long

Has successfully completed the
N.Y.C. D.O.B. recognized
Scaffold User Safety Training Course

Joint Apprentice Committee
Ironworkers Locals 40 & 361
35-23 36th Street
Astoria, NY 11106

Instructor

Issued: 6/27/09
Expires: 6/27/13

THIS IS NOT A RIGGERS LICENSE

THIS CERTIFIES THAT
William Jacobs
HAS SUCCESSFULLY COMPLETED
THE IRONWORKERS
OSHA 30 HOUR CONSTRUCTION
WORKER STANDARDIZED SAFETY
AND HEALTH TRAINING COURSE
DATE 10/11/08

Joseph J. Hunt
General President

THIS CERTIFIES THAT
William Jacobs
HAS SUCCESSFULLY COMPLETED
THE IRONWORKERS
OSHA 10 HOUR CONSTRUCTION
WORKER STANDARDIZED SAFETY
AND HEALTH TRAINING COURSE
DATE 5/10/08

Joseph J. Hunt
General President

THIS CERTIFIES THAT
William Jacobs

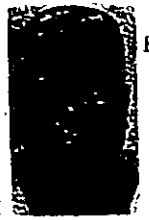

Has successfully completed the N.Y.C. D.O.B.
recognized **Tower Crane Safety Course**

Joint Apprentice Committee
Ironworkers Local 40 & 361
35-23 236th Street
Astoria, NY 11106

Instructor

Issued: 1/17/09
Expires: 1/17/12

THIS CERTIFIES THAT
BILLY JACOBS

HAS SUCCESSFULLY COMPLETED THE
TRAINING REQUIREMENTS SET FORTH BY
OSHA STANDARDS 1926.750 THROUGH .761
SUBPART R, STEEL ERECTION

GENERAL PRESIDENT DATE 8/22/ INSTRUCTOR

William Jacobs
Signal man

Cory Larson

Has successfully completed the N.Y.C. D.O.B. recognized **Tower Crane Safety Course**

Joint Apprentice Committee
Ironworkers Local 40 & 361
35-23 36th Street
Astoria, NY 11106

Instructor

Issued: 3/19/11
Expires: 3/19/14

THIS CERTIFIES THAT

Matthew Gelbke

Has successfully completed the
N.Y.C. D.O.B. recognized
Supported Scaffold User Safety Training

Joint Apprentice Committee
Ironworkers Locals 40 & 361
35-23 36th Street
Astoria, NY 11106

Christopher Bruckner
Instructor

Issued: 6/9/10
Expires: 6/9/14

THIS IS NOT A RIGGERS LICENSE

HAS SUCCESSFULLY COMPLETED
THE IRONWORKERS
OSHA 10 HOUR CONSTRUCTION
WORKER STANDARDIZED SAFETY
AND HEALTH TRAINING COURSE
DATE: **8/29/09**

Joseph J. Hunt
General President

THIS CERTIFIES THAT

Matthew Gelbke

HAS SUCCESSFULLY COMPLETED THE TRAINING REQUIREMENTS SET FORTH BY OSHA STANDARDS 1926.750 THROUGH .761
SUBPART R, STEEL ERECTION

GENERAL PRESIDENT — **8/27/09** DATE — Christopher Bruckner INSTRUCTOR

THIS CERTIFIES THAT

Matthew Gelbke

Has successfully completed the N.Y.C. D.O.B.
recognized **Tower Crane Safety Course**

Joint Apprentice Committee
Ironworkers Local 40 & 361
35-23 36th Street
Astoria, NY 11106

Christopher Bruckner
Instructor

Issued: 3/20/10
Expires: 3/20/13

HILTI **4394302** 3004631 F121 3/08

DATE: 8/23/10

QUALIFIED OPERATOR — Powder Actuated Tools

EMPLOYEE ID #

this certifies that Matthew S. Gelbke
NAME OF OPERATOR - PRINT

Has received the prescribed training in the operation of powder operated tools manufactured by

CHECK APPLICABLE TOOLS

- ☐ DX 637 / DX 672
- ☐ DX 556 / DX 35
- ☐ DX 460
- ☐ DX 450 / DX 451
- ☐ DX 750 / DX 750MX
- ☐ DX 660 - HSI
- ☐ DX 470R
- ☐ DX 600N
- ☐ DX 462MM / DX 462CM
- ☐ DX 36M
- ☑ DX 440 / DX 441
- ☐ DX 860ENP
- ☐ DX 440HM / X440CM
- ☐ DX 351
- ☐ DX 76 / DX 76MX

SIGNATURE OF AUTHORIZED INSTRUCTOR — 3/8/83 INSTRUCTOR EXPIRATION DATE

I have received the instruction in the safe operation and maintenance of powder actuated fastening tools from HILTI and models specified and agree to conform to all rules and regulations governing their use.

POWDER ACTUATED TOOL MANUFACTURERS INC

SIGNATURE

Revocation of card — Failure to comply with any of the rules and regulations for safe operation of powder actuated fastening tools shall be cause for the immediate revocation of this card, and it must be surrendered upon demand of the proper authority.

Jeff Birdsall

Has successfully completed the N.Y.C. D.O.B. recognized **Tower Crane Safety Course**

Joint Apprentice Committee
Ironworkers Local 40 & 361
35-23 236th Street
Astoria, NY 11106

Instructor

Issued: 2/28/09
Expires: 2/28/12

Jeff
Birdsall

THIS CERTIFIES THAT
Jeff Birdsall
HAS SUCCESSFULLY COMPLETED
THE IRONWORKERS
OSHA 10 HOUR CONSTRUCTION
WORKER STANDARDIZED SAFETY
AND HEALTH TRAINING COURSE
DATE **6/27/09**

Joseph J. Hunt
General President

THIS CERTIFIES THAT

JEFFREY BIRDSALL

HAS SUCCESSFULLY COMPLETED THE
TRAINING REQUIREMENTS SET FORTH BY
OSHA STANDARDS 1926.750 THROUGH .761
SUBPART R, STEEL ERECTION

GENERAL PRESIDENT 5/9/05 DATE INSTRUCTOR

WORLD TRADE CENTER - TOWER FOUR
NEW YORK, NY

TOWER CRANE INSTALLATIONS

FOR

DCM ERECTORS INC.

DCM PROJECT REF. 843

DESIGN BRIEF

CRANES 2 AND 2A

CHECK OF CRANES' SUPPORT STRUCTURE FOR ERECTION PHASES 1A AND 1B

NY PERMIT LP0368

Prepared by: J. Jurimae

Issue R0 - 11/14/11

LICENSED PROFESSIONAL ENGINEER
J. JURIMAE
PROVINCE OF ONTARIO

THE STATE EDUCATION DEPARTMENT / THE UNIVERSITY OF THE STATE OF NEW YORK / ALBANY, NY 12234

State Board for Engineering and Land Surveying, Education Building, 89 Washington Avenue, 2nd Floor Mezzanine-East Wing
Tel. (518) 474-3817, Ext. 140
Fax (518) 473-6282
E-mail: enginbd@mail.nysed.gov
E-mail: lsurvbd@mail.nysed.gov

LIMITED PERMIT TO PRACTICE PROFESSIONAL ENGINEERING

This permit shall entitle the holder to practice Professional Engineering in New York but only in connection with the specific project listed below:

Permit Number: 000368 - RENEWAL	Issued To: **Jaak Jurimae**
Permit Issue Date: October 8, 2011	
Expiration Date: October 7, 2014	

This is to certify that

JAAK JURIMAE

having applied for a limited permit to practice professional engineering in the State of New York and having submitted satisfactory evidence of established and recognized professional standing in the **Province of Ontario and holds license number 22696017**, and the State Board for Professional Engineering having recommended the issuance of such limited permit; therefore, in accordance with the provisions of Section 7207, subdivision 1, of the Education Law, the said **Jaak Jurimae** is hereby granted this limited permit to practice professional engineering in this state but only in connection with a specific project, viz., **Tower Four – World Trade Center, New York, New York** and is authorized to file plans, specifications, and reports using his **Province of Ontario seal**, as provided in Section 7209 of the Education Law. A copy of this permit shall accompany all documents filed with building officials or others in conjunction with this project.

Jane W. Blair, PE
Executive Secretary

Non-transferable
Valid only for project listed above

Professional Engineers must register triennially with the department to practice the profession in New York State. Limited permit holders whose projects may take longer to complete than the three-year registration period must renew their NYS registration to practice the profession in New York State.

WORLD TRADE CENTER - TOWER FOUR, NEW YORK, NY
TOWER CRANE INSTALLATIONS
CRANES 2 AND 2A
CHECK OF CRANES' SUPPORT STRUCTURE
FOR ERECTION PHASES 1A AND 1B

i-1r4	Crane installation general notes
16-42 to 46	Crane 2A erection loading
19-1r1,1.1	Crane 2A Phase 1 summary
19-4r1,5r1,6,6.1	Crane 2 and 2A crane column tributary floor loading to level 48
19-27 to 32	Crane 2 and 2A crane column tributary floor loading above level 48
19-33 to 44	VBF wind forces at level 48 for erection phases 1A and 1B
19-45 to 51	Trusses E,F and M model
19-52 to 58	Phase 1A crane column loading
19-59 to 73,73.1,73.2	Phase 1A crane column checks
19-74,75	Crane column reinforcing details
19-76 to 86	Phase 2A crane column and loading and checks

R0: Nov 14, 2011

WORLD TRADE CENTER - TOWER FOUR
TOWER CRANE INSTALLATIONS
GENERAL NOTES

1. STRUCTURAL REQUIREMENTS FOR SUPPORT OF THE CONSTRUCTION CRANES ON THE ERECTED STRUCTURE ARE NOTED HEREIN.

2. REFER TO PROJECT STRUCTURAL DRAWINGS FOR PERMANENT BUILDING STRUCTURAL ELEMENTS NOT SPECIFIED HEREIN.

3. INSTALLED CRANE EQUIPMENT

CRANE #1

MAKE & MODEL	FAVELLE FAVCO M760D SERIES II TOWER CRANE ON FMC TG1900 MAST SECTIONS ON FEDERATED EQUIPMENT UPPER AND LOWER CRANE BASKETS
TOWER HEIGHT	MAX 119'-9" (9'-1" LOWER BASKET, 8 @ 13'-7½" TG1900 MAST SECTIONS, 1'-8 MAST TRANSITION SECTION)
MAIN BOOM	180 FT + FLY

CRANE #2

MAKE & MODEL	FAVELLE FAVCO M760D SERIES II TOWER CRANE ON FMC TG1900 MAST SECTIONS ON FEDERATED EQUIPMENT UPPER AND LOWER CRANE BASKETS
TOWER HEIGHT	MAX 119'-9" (9'-1" LOWER BASKET, 8 @ 13'-7½" TG1900 MAST SECTIONS, 1'-8 MAST TRANSITION SECTION)
MAIN BOOM	165 FT + FLY IN PHASE 2 (UPPER BASKET SUPPORT UP TO 5TH FLOOR) 135 FT + FLY IN PHASE 3 (UPPER BASKET SUPPORT ABOVE 5TH FLOOR)

CRANE #2A

MAKE & MODEL	FMC TG1900 TOWER CRANE
TOWER HEIGHT	VARIES (SEE DCM DRAWING CR-2A R7)
MAIN BOOM	160 FT + FLY

4. MAXIMUM CRANE LIFTED LOADS ARE NOT TO EXCEED THE PUBLISHED CRANE SAFE WORKING LOAD CHART CAPACITY WITH THE SPECIFIED BOOM LENGTH AND OPERATING RADIUS.

5. THE INSTALLATION IS PROPORTIONED FOR AN OUT-OF-SERVICE BASIC WIND SPEED OF 95 MPH IN EXPOSURE C TO THE REQUIREMENTS OF ASCE/SEI 7-05 "MINIMUM DESIGN LOADS FOR BUILDINGS AND OTHER STRUCTURES". DESIGN STORM VELOCITY IS BASIC WIND SPEED FACTORED BY 0.85 TO REFLECT A CONSTRUCTION PERIOD OF 1 TO 2 YEARS IN ACCORDANCE WITH ASCE/SEI 37-02 "DESIGN LOADS ON STRUCTURES DURING CONSTRUCTION".

6. WIND SPEEDS IN EXCESS OF 30 MPH MEASURED AT THE CRANE CAB LEVEL ARE BY DEFINITION STORM WINDS AND THE CRANES MUST BE TAKEN OUT-OF-SERVICE. CRANE #1 IS TO BE PERMITTED TO WEATHERVANE WITH THE BOOM AT MAXIMUM 70 DEGREES TO THE HORIZONTAL (MAIN LOAD LINE AT 66 FOOT RADIUS). CRANE #2 UPPERWORKS IS TO BE POSITIVELY SLEW LOCKED WITH MAIN BOOM LENGTH SQUARE TO NORTHWEST MAST FACE (I.E. BOOM IS POINTING PLAN NORTHWEST) AND MAIN HOOK AT MAXIMUM RADIUS (160 FOOT RADIUS [16.5 DEGREE BOOM ANGLE] WITH 165 FT BOOM IN PHASE 2 AND 130 FOOT RADIUS [18 DEGREE BOOM ANGLE] WITH 135 FT BOOM IN PHASE 3. CRANE #2A IS TO BE PERMITTED TO WEATHERVANE WITH THE BOOM AT MAXIMUM 70 DEGREES TO THE HORIZONTAL (MAIN LOAD LINE AT 60 FOOT RADIUS).

7. UNLESS OTHERWISE NOTED, ALL STEEL CRANE BRACING AND SUPPORT MATERIAL IS TO COMPLY WITH THE FOLLOWING SPECIFICATIONS:
   - TUBULAR STRUCTURAL SHAPES (HSS) - ASTM A500 GR. B (Fy = 46 KSI)
   - STRUCTURAL SHAPES AND PLATES UNLESS NOTED - ASTM A572 GR. 50
   - STRUCTURAL SHAPES AND PLATES NOTED - ASTM A36
   - STRUCTURAL BOLTS - ASTM A325 OR A490
   - WELDING ELECTRODES - E70XX BASIC ELECTRODES OR CONTROLLED HYDROGEN PROCESS.

8. CRANE INDUCED FORCES SPECIFIED HEREIN ARE SERVICE (UNFACTORED) LOADS. USE LOAD FACTOR OF 1.6 FOR FACTORED LOADS USING STRENGTH DESIGN.

CROWE 2A ERECTED ON 4 TOWER SECTIONS W/ TOP CLIMING FRAME. CROWE NON-OPG @ MIN RADIUS (MAX UNBALANCED MOMENT) IN 30 MPH WIND

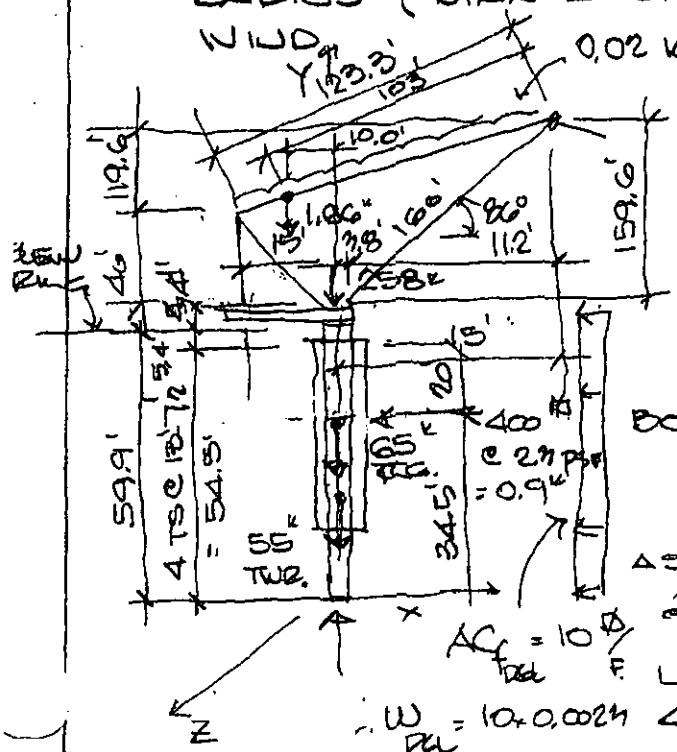

$AC_{f_{DL}} = 10\ \square/F$

$\therefore W_{DL} = 10 \times 0.0027$

$= 0.027$ KLF

CWT RADIUS = 17.3' - 6.8' = 10.5 F.

FIXED BACK M_Z = -1209 lk

CWT 73.6k @ 10.5' = -773 lk

-1982 lk

BOOM M_Z = 1274 cos 86° = 191 lk

BOOM FOLLS ~ $\left[123.3 \times 0.02\right]\left[\frac{30}{2} - 15\right]$

-1.66×10 = -17 lk

174 lk

ASSUME NO HOOK

$\therefore$ NET GRAVITY = -1982 + 174 = -1808 lk

UPPERWORKS SELF WT = 263k

4 x 13'-7½ T.S. @ 12.5k EA = 50k

TOP CLIMBING FRAME = 65k

TOTAL CROWE WT 378k

@ SLEWING P_Y = 263k - 5.4' x 0.917 KLF

= 258 k

WIND AREAS @ SLEWING

FIXED UPPERWORKS 570 □ @ $\bar{Y}$ = 15.6 F

BOOM @ 3 □/F $A = 170 * 3 \sin^2 86°$ ≈ 510 □

$\bar{Y} = 4.4 + \frac{170}{2} \sin 86°$ ≈ 89 F.

$\therefore \Sigma AC_f$ = 570 + 510 = 1080 □

$\Sigma AC_f \bar{Y}$ = 570 x 15.6 + 510 x 89 = 54300 F^3

PROJECT	CLIENT	BY JJ DATE 10-20-11
		CK ____ DATE ____
		RV ____ DATE ____
KAJ ENGINEERS INC.	CONSULTING ENGINEERS TORONTO, CANADA	PROJECT NO. 8794
		PART 16 SHEET 42 OF ____

CROWE 2A.	ERECTION

FOR 30 MPH WIND ($q_z = 2.3$ psf)

$H = 1080 \times 0.0023 = 2.5^k$

$M_z = 54300 \times 0.0023 = 125^{ik}$

∴ @ SLEWING $\Sigma M_z = -1808 - 125 = -1933^{ik}$

$R_Y = 258^k$

$H'_x = 2.5 - 5.4 \times 0.023 = 2.4^k$

@ TOWER BASE W/O P-δ EFFECTS

$R_Y = 258 + 65 + 55 = 378^k$

$H_x = 2.5 + 0.9 + 59.9 \times 0.023 = 4.8^k$

$M_z = -1933 - 0.9 \times 34.5 - \frac{59.9^2 \times 0.023}{2} = 2005^{ik}$

P-δ EFFECTS (REF CROWE 2A PH 1 OPL SHTS 16-20+ FOR NOMENCLATURE & PROCEDURE)

THEN $K = \left[\frac{Q}{EI}\right]^{1/2} = \left[\frac{1.6(\overbrace{258 + 65 + 55/3}^{341^k})}{29000 \times 293400}\right]^{1/2} = 2.532 \times 10^{-4}$ RAD/IN.

$\cos kh = \cos(2.532 \times 10^{-4})(59.9 \times 12) = 0.9835$

$\delta_c = \left[\frac{M_c}{Q}\right]\left[\frac{1 - \cos kh}{\cos kh}\right] = \left[\frac{1933}{341}\right]\left[\frac{1 - 0.9835}{0.9835}\right] = 0.095$ F.

$\therefore \tan kh = \tan(\overbrace{2.532 \times 10^{-4})(59.9 \times 12}^{0.1820}) = 0.1840$

$\delta_w = \frac{1}{Qk}\left[W_w(\tan kh - kh) + wh\left(\tan kh - \frac{kh}{2}\right) - \frac{w}{k}\left(\frac{1 - \cos kh}{\cos kh}\right)\right]$

FOR CLIMBING CROWE $H = 0.9^k$ @ $\bar{Y} = 34.5$ F.

PROJECT	CLIENT	BY JJ DATE 10-20-11
		CK ____ DATE ____
KAJ ENGINEERS INC.	CONSULTING ENGINEERS TORONTO, CANADA	RV ____ DATE ____
		PROJECT NO. 8794
		PART 16 SHEET 43 OF ____

CROWE 2A	ERECTION.

$$\Delta @ \text{ SLEWRING} = \frac{Pb^2}{6EI}(3l-b) \longrightarrow l = 59.9', \; b = 34.5', \; a = 25.4'$$

$$= \frac{0.9 \times 34.5^2 (3 \times 59.9 - 34.5)}{6\,EI}$$

$$= \frac{25924}{EI}$$

FOR EQUIV H @ SLEWRING $\Delta = \frac{Hl^3}{3EI} = \frac{H \times 59.9^3}{3\,EI} = \frac{71641\,H}{EI}$

$\therefore$ EQUIV $H = \frac{25924}{71641} \simeq 0.362^k \simeq 0.4^k$

THEN $W_W = 2.5 + 0.4 = 2.9^k$

$$\therefore \delta_W = \frac{1}{341(2.532 \times 10^{-4})12}\left[2.9(0.1840 - 0.1820) + 0.021 \times 59.9\left(0.184 - \frac{0.182}{2}\right) - \frac{0.023}{(2.532 \times 10^{-4})12}\left(\frac{1 - 0.9835}{0.9835}\right)\right]$$

$= 0.067$ F.

$$\delta_D = \frac{\theta_D \tan kh}{k}$$

$$= \frac{4.43 \times 10^{-3} \times 0.184}{(2.532 \times 10^{-4})\,12}$$

$= 0.268$ F.

θ_D = MAST BASE ROTATION + MAST OUT-OF-PLUMB

MAST BASE ROTATION ~ 2" IN 106' @ 6000 F-K

$\therefore$ MAST OUT-OF-PLUMB $= \frac{1}{500}$ MAX

$$\therefore \theta_D \sim \frac{1.6 \times 0.3}{106} \times \frac{1933}{6000} + \frac{1}{500}$$

$\simeq 4.43$ RAD

$\Sigma\delta = 0.095 + 0.067 + 0.268 = 0.370$ F.

PROJECT	CLIENT	BY JJ DATE 10-20-11
		CK ____ DATE ____
KAJ ENGINEERS INC.	CONSULTING ENGINEERS TORONTO, CANADA	RV ____ DATE ____
		PROJECT NO. 8794
		PART 16 SHEET 44 OF ____

@ MAST BASE W/ P.Δ EFFECTS

$P_Y = 378^k$ $\qquad P_{Y_{0.6D}} = 0.6 \times 378 = 227^k$

$H_X = 4.8^k$

$M_Z = 2005 + 341^k \times 0.370' = 2131$ IK

FOR TORQUE USE 50% OF MAX OP'G TORQUE
$= 0.5 \times 350 = 175$ F-k.

FROM 18-32 FOR IN-SERVICE LOAD CASES
MAX DOWN FORCE OCCURS @ LC49 (MOMENT VECTOR @ 90°) & MAX UP @ LC56 ($\phi = 270°$)

FROM 18-36 FOR STORM LOAD CASES
MAX DOWN FORCE OCCURS @ LC25 (MOMENT VECTOR @ 90°) & MAX UP @ LC28 ($\phi = 270°$)

THEN FROM FILE 94C2A_BF_ERECTION

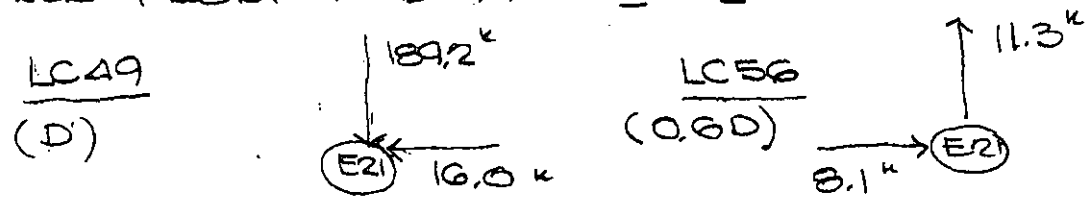

PROJECT	CLIENT	BY JJ DATE 10-20-11
		CK ____ DATE ____
		RV ____ DATE ____
KAJ ENGINEERS INC.	CONSULTING ENGINEERS TORONTO, CANADA	PROJECT NO. 8794
		PART 16 SHEET 45 OF ____

CRANE 2A ERECTED W/ 4 TOWER SECTIONS & W/ TOP CLIMBING FRAME BUT W/O CRANE ROBELLO & UPPERWORKS IN STORM WIND.

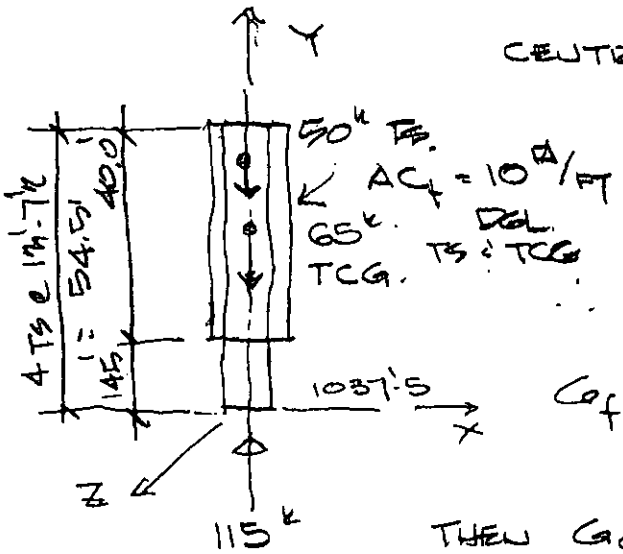

CENTRE OF AREA $\approx \left[\frac{54.5^2}{2} + 40 \times 34.5\right]\frac{1}{54.5}$

≈ 30.3 FT.

$\bar{Z} \approx 1037.4' + 30.3' - 314' \approx 754$ F.

$\therefore K_Z = 2.01\left(\frac{754}{900}\right)^{2/9.5} = 1.94$

$G_f = 0.85$ FOR RIGID SECTION

$\therefore q_{1z} = 13.9\ K_z$

THEN $G q_z K_z = 0.85 \times 13.9 \times 1.94 = 22.9$ psf

SAY 23 psf

(SAME AS BASE FRAME SHT 18-17)

$\therefore H_x = 94.5 \times 10 \times 23 \times 10^{-3}$

$= 21.7$ K

$M_Z = \frac{54.5^2 \times 0.023}{2} + 40 \times 0.023 \times 34.5$

≈ 66 F-K.

THEN FROM FILE 94CR2A_BF_ERECTION_STORM

LC 49 = (D)

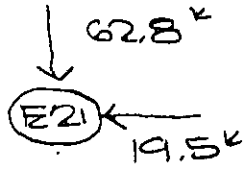

LC56 (0.6D)

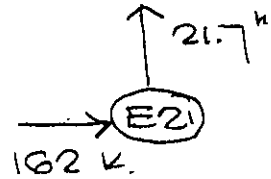

PROJECT	CLIENT	BY JJ DATE 10-20-11
		CK ____ DATE ____
		RV ____ DATE ____
KAJ ENGINEERS INC.	CONSULTING ENGINEERS TORONTO, CANADA	PROJECT NO. 8794
		PART 16 SHEET 46 OF ____

CRANE 2A – PHASE 1.

CHECK OF CRANE 2A BASEFRAME SUPPORTING STRUCTURE FOR PHASE 1 CONSTRUCTION LOADING PRIOR TO CONCRETE EMBEDMENT OF AFFECTED COLUMNS.

CRANE 2A PHASE 1 CONSISTS OF CRANE FREESTANDING ON ITS BASEFRAME WITH UP TO 8 TOWER SECTIONS IN NORMAL IN-SERVICE AND OUT-OF-SERVICE MODES. SEE ALSO SHEETS 19-1 AND 2.

CHECK OF BASEFRAME SUPPORTING COLUMNS 4L/408, 4L/409 AND 4CD/4C6 ARE BASED ON CORE WALL COMPLETED CONCRETE AT LEVEL 42 AND TOP OF CONCRETE AT PERIMETER EMBEDDED COLUMNS AT LEVEL 40. TOPMOST POURED SLAB ON DECK IS AT LEVEL 45. FOR THESE CRITERIA, NOTED COLUMNS ARE ADEQUATE (REF SHEETS 19.25 AND 19.26 FOR SUMMARY).

CHECKS OF CRANE 2 AND CRANE 2A SUPPORT COLUMNS 4CC.2/4C4, 4CC.2/4C5, 4CD/4C4 AND 4CD/4C5 BETWEEN LEVEL 47 AND THE TOP OF CORE WALL CONCRETE EMBEDDING THESE COLUMNS ARE BASED ON THE FOLLOWING CONDITIONS:

PHASE 1A:

- WORKFLOOR AT LEVEL 48
- STEEL ERECTION TO LEVEL 50 MAXIMUM
- COCOON ALONG 4C7 ABOVE 48 NOT IN-PLACE
- CRANE 2 IN-SERVICE WITH UPPER BASKET BELOW LEVEL 47 AND LOWER BASKET BELOW LEVEL 45
- CRANE 2A BEING ERECTED ON MAXIMUM 4 TOWER SECTIONS PLUS CLIMBING CAGE
- SLABS ON STEEL DECK MAY BE COMPLETE TO LEVEL 46 EXCEPT CRANE BAYS
- CRANE BAY CORE WALL CONCRETE COMPLETE TO LEVEL 43 TOP OF STEEL.

FOR CONTINUATION, SEE SHT 19-1-1.

△ ADDED CRANE 2 BAY COL NOTES 11-14-11

BY JJ	DATE 10-05-11
CK	DATE
RV △ JJ	DATE 11-14-11
PROJECT NO. 8794	
PART 19	SHEET 1 OF

PHASE 1B:

- WORKFLOOR AT LEVEL 50
- STEEL ERECTION TO LEVEL 52 MAXIMUM
- COCOON ALONG 4C7 ABOVE 4B MAY BE IN-PLACE
- CRANE 2 OUT-OF-SERVICE AND BEING DISMANTLED
- CRANE 2A IN-SERVICE ON MAXIMUM 8 TOWER SECTIONS PLUS CLIMBING CAGE
- SLABS ON STEEL DECK COMPLETE TO LEVEL 46 WHERE FEASIBLE
- CRANE BAY CORE WALL CONCRETE COMPLETE TO LEVEL 44 TOP OF STEEL.

WITH THE EXCEPTION OF COLUMNS 4CD/4C4 AND 4CD/4C5, CRANE 2 CORE COLUMNS ARE ADEQUATE FOR PHASE 1A AND 1B LOADING CONDITIONS. FOR THESE CONDITIONS, COLUMN 4CD/4C4 REQUIRES REINFORCEMENT BETWEEN LOWER BASKET SUPPORT BRACKET AT ELEV 969'-10½" TO BELOW LEVEL 44 FLOOR FRAMING WHILE COLUMN 4CD/4C5 REQUIRES REINFORCEMENT BETWEEN FIELD SPLICE AT ELEV 953'-4" TO BELOW LEVEL 43 FLOOR FRAMING (SEE SHEETS 19-74 AND 19-75, RESPECTIVELY).

PROJECT	CLIENT	BY JJ DATE 11-14-11
		CK ____ DATE ____
KAJ ENGINEERS INC.	CONSULTING ENGINEERS TORONTO, CANADA	RV ____ DATE ____
		PROJECT NO. 8794
		PART 19 SHEET 1.1 OF ____

Lynch-Jacobs, Maureen

From: Lynch-Jacobs, Maureen
Sent: Wednesday, January 18, 2012 3:18 PM
To: 'Lawrence K. Shapiro P.E.'; 'Mike Schiavoni'; 'Michael Alacha'; 'Delia Shumway'; 'Richard Gilbert'; Barmas, Irina; 'Gregory Vidgop'; 'Larry Davis'
Cc: Kamocsai, John; Keane, Jim; Caban, Wally
Subject: RE: CD 3705 Hydraulic Test Requirements- conference call 1.18.12 @ 1:00 PM

Attendees: T. Kanzler, D. Shumway, F. Damiani, R. Gilbert, L. Shapiro, M. Alacha, M. Lynch-Jacobs, M. Schiavoni

Meeting recap:

1. NYC requests –three steps for hydraulic system review
   a. History of crane maintenance-Owner responsibility
   b. Testing- i. at time of load test and ii. on periodic schedule (to be determined after review of protocol)
   c. Continued maintenance on the site-Employer responsibility
2. Owner stated:
   a. The crane has original design with new components and three tier engine
   b. Specifications will be supplied
3. Conclusions:
   a. The testing will be performed by a qualified person
   b. The testing proposal for the Hydraulic/Electrical system of CD 3705 will be supplied by M. Schiavoni and T. Kanzler. The city ensured a quick turnaround on the review.
   c. A follow up conference call will be scheduled for 1.19.12. (may be cancelled if not required)

Maureen

From: Lynch-Jacobs, Maureen
Sent: Wednesday, January 18, 2012 12:55 PM
To: 'Lawrence K. Shapiro P.E.'; 'Mike Schiavoni'; 'Michael Alacha'; 'Delia Shumway'; 'Richard Gilbert'; Barmas, Irina; 'Gregory Vidgop'; 'Larry Davis'
Cc: Kamocsai, John; Keane, Jim
Subject: RE: CD 3705 Hydraulic Test Requirements- conference call 1.18.12 @ 1:00 PM

Delia will be calling in by cell phone from the field so let us just discuss what is needed for 3705 today and talk about the future cranes another day.,

From: Lynch-Jacobs, Maureen
Sent: Wednesday, January 18, 2012 9:56 AM
To: 'Lawrence K. Shapiro P.E.'; 'Mike Schiavoni'; 'Michael Alacha'; 'Delia Shumway'; 'Richard Gilbert'; Barmas, Irina; Gregory Vidgop; Larry Davis
Cc: Kamocsai, John; Keane, Jim
Subject: CD 3705 Hydraulic Test Requirements- conference call 1.18.12 @ 1:00 PM

All,
We would like to have a conference call at 1pm to discuss:

1. Hydraulic test requirements for the EOR sign off for CD 3705- The city has stated the EOR is to dictate the required testing and timing. The EOR is requesting a discussion to review requirements.
2. Period testing requirements and time frame-Should this become a line item on the inspection reports?
3. Hydraulic test requirements for future cranes- What will be the standard for future cranes?

Everyone please dial 212-435-8228 at 1:00 today. The first person may ring along time until the 2nd person calls. Stay on the line.
Thanks
Maureen

Lynch-Jacobs, Maureen

From: Lynch-Jacobs, Maureen
Sent: Wednesday, January 18, 2012 12:21 PM
To: 'Richard Gilbert'
Cc: Barmas, Irina
Subject: FW: CD 3705

Richard,
Please include this change in the record set.
Maureen

From: Peter Stroh [mailto:Peter@strohengineering.com]
Sent: Wednesday, January 18, 2012 12:01 PM
To: Lynch-Jacobs, Maureen
Cc: Takahisa Onishi
Subject: RE: CD 3705

Maureen,

The calculations were done for the 160' main boom with the 10' fly, so as far as loading/design goes it is OK. I checked the drawings, and they do not indicate the 10' fly, so this should be updated. Also, all the paperwork should be updated for the correct configuration.

Peter J. Stroh, P.E.
President
Stroh Engineering Services, P.C.
41 Robert Street
Babylon, New York 11702 U.S.A.
P - 631-669-7531
F - 631-669-6369
M - 631-553-0077

From: Lynch-Jacobs, Maureen [mailto:mjacobs@panynj.gov]
Sent: Wednesday, January 18, 2012 11:16 AM
To: Peter Stroh
Cc: Takahisa Onishi
Subject: CD 3705

Peter,
The contract drawings all stated 160' of boom. The boom will have a 10' tip, which would bring the total to 170'. Does this affect the approval?
Maureen

NOTICE: THIS E-MAIL AND ANY ATTACHMENTS CONTAIN INFORMATION FROM THE PORT AUTHORITY OF NEW YORK AND NEW JERSEY AND AFFILIATES. IF YOU BELIEVE YOU HAVE RECEIVED THIS E-MAIL IN ERROR, PLEASE NOTIFY THE SENDER IMMEDIATELY, PERMANENTLY DELETE THIS E-MAIL (ALONG WITH ANY ATTACHMENTS), AND DESTROY ANY PRINTOUTS.

T4
2A

From:	Aaron Israel
To:	Richard Gilbert
Subject:	FW: FW:T4 - DCM FMC Link Belt Tower Crane compliance package submission
Date:	Wednesday, February 01, 2012 3:33:00 PM

FYI
Thank You
Aaron Israel
Emissions Specialist
Foley Incorporated
www.foleyinc.com

aisrael@foleyinc.com
(732) 885-8034 office
(732) 885-6655 fax
(732) 261-5303 cell

From: Tony Almeida [mailto:talmeida@dcl-inc.com]
Sent: Wednesday, February 01, 2012 3:28 PM
To: Aaron Israel
Cc: Tom Domotorffy
Subject: RE: FW:T4 - DCM FMC Link Belt Tower Crane compliance package submission

Hi Aaron,

FT-DPF is currently in field trials for the possible application of an EPA verification. The decision hasn't been made as to whether or not to apply for the verification. This is because the market is small compared to investment required for the application. The application process takes about one year to be approved.

In the past , the Port Authority allowed for a non verified flow through filter in cases where a verified wall flow was not possible. This policy may have changed and perhaps we can look into whether or not a wall flow DPF can be designed for the crane.

Thanks

Tony Almeida
Territory Manager- U.S.A. East
DCL International Inc.
P.O. Box 90
Concord, ON L4K 1B2
Tel: 1-800-872-1968 or 905-660-6450 Ext. 268
Fax: 905-660-7566
Email: talmeida@dcl-inc.com
Visit our all-new website: <http://www.dcl-inc.com>

From: Aaron Israel [mailto:aisrael@foleyinc.com]
Sent: Wednesday, February 01, 2012 3:00 PM
To: 'talmeida@dcl-inc.com'
Cc: Tom Domotorffy
Subject: FW: FW:T4 - DCM FMC Link Belt Tower Crane compliance package submission

Tony

Can you respond to the below questions from DCM Erectors?

Thank You
Aaron Israel
Emissions Specialist
Foley Incorporated
www.foleyinc.com

aisrael@foleyinc.com
(732) 885-8034 office
(732) 885-6655 fax
(732) 261-5303 cell

From: Richard Gilbert [mailto:richard@dcmerectors.com]
Sent: Wednesday, February 01, 2012 2:58 PM
To: Aaron Israel
Subject: FW: FW:T4 - DCM FMC Link Belt Tower Crane compliance package submission

See below from Port Authority.

New question for DCL

1. Does a FT-DPF filter need to have an approval from EPA or other agency. If no; can you provide info about that exemption.

2. If yes; can you get approval and what is lead time..

Question for you Aaron
Did we select the FT-DPF filter due to temperature issues with the application for which this engine is used for?

From: Hill, Everol [mailto:ehill@tishman.com]
Sent: Wednesday, February 01, 2012 2:53 PM
To: Richard Gilbert; Eddie Meahan
Cc: Troast, Tyler
Subject: FW: FW:T4 - DCM FMC Link Belt Tower Crane compliance package submission

Richard,
See below for email from the PA they claimed the certification must come from the EPA.

From: Paturzo, Dominic J. [mailto:dpaturzo@panynj.gov]
Sent: Wednesday, February 01, 2012 10:49 AM
To: Hill, Everol; Barmas, Irina
Cc: Essen, Dean; Scott Thompson; Young, Michael
Subject: RE: FW:T4 - DCM FMC Link Belt Tower Crane compliance package submission

Everol,

This submission is not what was requested, the certification must come from a regulatory agency such as the EPA. Please review & revise this submission.

Thanks,

Dominic Paturzo
Office Engineer- WTC Construction

The Port Authority of NY & NJ
115 Broadway, 5th Floor
New York, NY 10006
Office 212-435-5699
Cell: 201-687-6338
dpaturzo@panynj.gov

Nothing in this email or in the conduct or communication of the Port Authority shall be or constitute a waiver or modification of any rights of the Port Authority or obligations of SPI arising under the transaction documents pertaining to the World Trade Center.

From: Hill, Everol [mailto:ehill@tishman.com]
Sent: Tuesday, January 31, 2012 1:11 PM
To: Barmas, Irina
Cc: Paturzo, Dominic J.; Essen, Dean; Scott Thompson; Young, Michael
Subject: RE: FW:T4 - DCM FMC Link Belt Tower Crane compliance package submission

Irina,

Please find attached Compliance certification letter.

If you have any questions, do not hesitate to contact me.

Thanks

From: Barmas, Irina [mailto:ibarmas@panynj.gov]
Sent: Tuesday, January 31, 2012 7:49 AM
To: Hill, Everol
Cc: Paturzo, Dominic J.; Essen, Dean; Scott Thompson
Subject: RE: FW:T4 - DCM FMC Link Belt Tower Crane compliance package submission

Everol:

When can we expect the letter?

Thanks

From: Hill, Everol [mailto:ehill@tishman.com]
Sent: Wednesday, January 25, 2012 9:58 AM
To: Barmas, Irina
Subject: RE: FW:T4 - DCM FMC Link Belt Tower Crane compliance package submission

Irina, Thanks.
I will reach out to DCM for the requested letter and get back to you ASAP.

From: Barmas, Irina [mailto:ibarmas@panynj.gov]
Sent: Wednesday, January 25, 2012 9:01 AM
To: Hill, Everol; Essen, Dean; Scott Thompson
Cc: Paturzo, Dominic J.; Lynch-Jacobs, Maureen
Subject: FW:T4 - DCM FMC Link Belt Tower Crane compliance package submission

Everol:

Please see comment from PA Environmental below. Please provide the requested certification as soon as possible.

Thank you

From: Mitchell, Kelly
Sent: Monday, January 23, 2012 10:41 AM
To: Paturzo, Dominic J.; Young, Michael
Cc: Barmas, Irina; Lipke, William; Picart, Ibis
Subject: RE: DCM FMC Link Belt Tower Crane compliance package submission

Thanx for the compliance package.

I have review the package for the FMC Link Belt Tower Crane, Serial # 76G9-1206, and it is fine to work on site but needs one item to compete the submission package.

It is the certification letter. It is missing from this package and should be submitted by the contractor for our files.

Background on the letter: It comes from either the following regulatory agencies: EPA, CARB, or VERT. This letter speaks of the compatibility of the DCL's manufacturer's DPF filter and the said engine. In this case the Caterpillar C15 ACERT engine. Also, how the agency approves this retrofit.

KM

From: Young, Michael
Sent: Friday, January 20, 2012 4:59 PM
To: Mitchell, Kelly; Picart, Ibis
Cc: Paturzo, Dominic J.; Barmas, Irina; Lipke, William
Subject: FW:

FYI and use

From: Hill, Everol [mailto:ehill@tishman.com]
Sent: Friday, January 20, 2012 11:56 AM
To: Young, Michael; Barmas, Irina
Cc: Mickowska, Kasia; Harding, Melissa
Subject: Fw:

Mike/Irina,
Attached are DCM's updated equipment log.

From: Richard Gilbert [mailto:richard@dcmerectors.com]
Sent: Friday, January 20, 2012 06:44 AM
To: Eddie Meahan <emeahan@dcmerectors.com>; Hill, Everol
Cc: Larry Davis <ld@dcmerectors.com>; Arnold VanHess (Arnoldvanhees@gmail.com) <Arnoldvanhees@gmail.com>; Joe Miloseia (joemilomo1@aol.com) (joemilomo1@aol.com) <joemilomo1@aol.com>; Ritchie Bhaskaranand <ritchieb@asda.ca>; John Salvarinas (@asda.ca) <john.salvarinas@asda.ca>; Mike Zilnik <mzilnik@dcmerectors.com>; Mike Schiavoni <MSFEDERATED@AOL.COM>
Subject: RE:

Everol;

Forms you requested.

From: Eddie Meahan
Sent: Thursday, January 19, 2012 1:37 PM
To: Richard Gilbert
Subject: FW:

Richard,

Tishman is asking for a equipment compliance form for crane 2A, thanks

Eddie Meahan
DCM Erectors, Inc.
110 East 42nd Street, Suite 1704
New York, N.Y. 10017

From: Hill, Everol [ehill@tishman.com]
Sent: Thursday, January 19, 2012 11:46 AM
To: Eddie Meahan
Subject:

Eddie,
Attached are the following:

1.Equipment log--- Please update.

2. Equipment compliance form for crane 2A, please complete---Attached is sample for crane 2.

Thanks

NOTICE: THIS E-MAIL AND ANY ATTACHMENTS CONTAIN INFORMATION FROM THE PORT AUTHORITY OF NEW YORK AND NEW JERSEY AND AFFILIATES. IF YOU BELIEVE YOU HAVE
RECEIVED THIS E-MAIL IN ERROR, PLEASE NOTIFY THE SENDER IMMEDIATELY, PERMANENTLY DELETE THIS E-MAIL (ALONG WITH ANY ATTACHMENTS), AND DESTROY ANY
PRINTOUTS.

NOTICE: THIS E-MAIL AND ANY ATTACHMENTS CONTAIN INFORMATION FROM THE PORT AUTHORITY OF NEW YORK AND NEW JERSEY AND AFFILIATES. IF YOU BELIEVE YOU HAVE
RECEIVED THIS E-MAIL IN ERROR, PLEASE NOTIFY THE SENDER IMMEDIATELY, PERMANENTLY DELETE THIS E-MAIL (ALONG WITH ANY ATTACHMENTS), AND DESTROY ANY
PRINTOUTS.

NOTICE: THIS E-MAIL AND ANY ATTACHMENTS CONTAIN INFORMATION FROM THE PORT AUTHORITY OF NEW YORK AND NEW JERSEY AND AFFILIATES. IF YOU BELIEVE YOU HAVE
RECEIVED THIS E-MAIL IN ERROR, PLEASE NOTIFY THE SENDER IMMEDIATELY, PERMANENTLY DELETE THIS E-MAIL (ALONG WITH ANY ATTACHMENTS), AND DESTROY ANY
PRINTOUTS.

Carpinelli, Theodore

From:	Carpinelli, Theodore
Sent:	Thursday, December 29, 2011 3:04 PM
To:	Carpinelli, Theodore
Subject:	FW: DRP Upload: TCA 4000.05 - Transmittal #340_WTC-4 Crane 2A Installation Add. 1 (DRP Upload) (e-mail 7)
Attachments:	BOLTING CRANE 2A DUNNAGE 12-28-11.pdf; DCM UT REPORT - TOWER 4 - 48TH FLOOR - 4CD&411 - 12-28-11.pdf; WELDING Kenny 48TH dunnage 12-28-11.pdf

---

From: Gregory Vidgop [mailto:GregoryVidgop@asda.ca]
Sent: Thursday, December 29, 2011 2:40 PM
To: Ritchie Bhaskaranand; Troast, Tyler; Richard Gilbert New York Address; Michael Williams NY Address
Cc: Carpinelli, Theodore; Mike Zilnik New York Address; Gary Decock; Larry Davis New York Address
Subject: RE: DRP Upload: TCA 4000.05 - Transmittal #340_WTC-4 Crane 2A Installation Add. 1 (DRP Upload) (e-mail 7)

Ritchie, in reference to the PA item 10:
this email is to confirm that the dunnage, required for the crane 2A erection, has been installed according to the design drawings and a technician under my direction has inspected the dunnage support connections in place. The bolting and welding inspection reports are attached.
Please contact me in case of any questions.

Gregory Vidgop, P.E.
DCM Erectors - MRP
1640 New Market Ave
S. Plainfield, NJ 07080
Phone: 732-968-6061 x21
Fax: 732-968-5675
E-Mail GregoryV@asda.ca

From: Ritchie Bhaskaranand
Sent: Wednesday, December 28, 2011 6:04 PM
To: Troast, Tyler; Richard Gilbert New York Address; Gregory Vidgop; Michael Williams NY Address
Cc: Carpinelli, Theodore; Mike Zilnik New York Address; Gary Decock; Larry Davis New York Address
Subject: RE: DRP Upload: TCA 4000.05 - Transmittal #340_WTC-4 Crane 2A Installation Add. 1 (DRP Upload) (e-mail 7)

PA 10 is outstanding.

Mike similar to 8 that you did for the reinforcing will need a field inspection report for all the Dunnage steel once its completed per our erection diagrams and per Jaaks email of yesterday accepting field welding in lieu of bolting at certain joints

DCM ERECTORS INC.

110 East 42nd Street Suite 1710
New York, NY 10017
United States of America

Phone: (212) 599-1603
Fax: (212) 599-1615

DAILY INSPECTION REPORT

PROJECT: World Trade Center Tower Four	**Inspector: M.Williams**
PROJECT ADDRESS: World Trade Center Tower Four, N.Y., N.Y.	**DATE: 12/28/11**

[illegible]

AT ELEVATION: +1028'- 4 1/2"

PLATES AT GIRDERS BOLTED TO PLATES AT GIRDERS COMPLETED AND ACCEPTED

DET. 4, 8, 10 & 12

AT ELEVATION: +1036'- 4 1/2"

PLATES AT GIRDERS BOLTED TO PLATES AT GIRDERS COMPLETED AND ACCEPTED

DET. 4 & 8

ANGLES TO GUSSET

AT ELEVATION: +1028'- 4 1/2"

ANGLES BOLTED TO GUSSET COMPLETED AND ACCEPTED

DET. 1, 2, 3, 4, 5, 6, 7, 8, 9, 10, 11, 12, 16, M-M & N-N

AT ELEVATION: +1036'- 4 1/2"

ANGLES BOLTED TO GUSSET COMPLETED AND ACCEPTED

DET. 4, 8, 13, 14, 15, M-M & N-N

DIAGONAL ANGLE BRACE

FRAMED ELEVATIONS:

BET. ELEVATION: +1028'- 4 1/2" & ELEVATION: +1036'- 4 1/2"

MOST ANGLES BOLTS PRETENSIONED AND ACCEPTED [OTHERS WELDED TO GUSSET]

DET. 17, 18, 19, 20, 21, 22, 23, 24, 25, 28, 29, 30 & H-H

DCM ERECTORS INC.

110 East 42nd Street Suite 1710
New York, NY 10017
United States of America

Phone: (212) 599-1603
Fax: (212) 599-1615

WELDING INSPECTION REPORT

PROJECT: World Trade Center	**INSPECTOR: M. Williams**
PROJECT ADDRESS: WORLD TRADE CENTER Tower Four New York, NY	**DATE: 12/28/11**
ACCEPTANCE STANDARDS: AWS D1.1 (2010)	REF. SPEC: 05100
ACCEPTANCE CRITERIA: DRAWINGS & PROJECT SPECIFICATIONS	DWG: E1002 & E1003[3]

LOCATIONS: **4L - 4CD/409 - 408**

FRAMING / GRID **ABOVE 48TH CRANE 2A BASE FRAME**

DET. 6, 7, 16, 18, 21, 23 & 30/ SECT. A-A, B-B, K-K & R-R

STAGES OF INSPECTION:	Base Metal Preparation [X]	Fit-up & Alignment [X]	Root Pass [X]
	Intermediate Passes: [X]	Final Inspection: [X]	Re-Inspection: [ ]

MACHINE TYPE: LINCOLN	**AMPS: 139-188**	**POLARITY: DC+**
MAKE: XMT 350VS	**PROCESS: SMAW**	**POSITION: 3G, 2F, 3F & 4F**
AWS JOINT DESIGN:	**THICKNESS: .750", .312"- .625"**	**WELD SIZE : .750", .250"- .375"**
[Groove]/[Fillet]/ Plug / Spot / Slot / Other:	**ELECTRODE: E7018**	
BASE MATERIAL: 992 GR. 50/992 GR. 50	**DIAMETER (IF PIPE):**	

WELDER	**LICENSE #**
KENWYN NORIEGA	7194

SUMMARY OF INSPECTION:

ANGLES WELDED TO GUSSET.
PLATE WELDED TO NODE.
PLATE WELDED TO REINFORCING PLATE AND COLUMN FLANGE.

INSPECTION STATUS:	Accepted: [X]	Rejected: [ ]	Work in Progress: [ ]

DCM ERECTORS INC.

110 East 42nd St. New York, NY 10017 Phone: (212) 599-1603 Fax: (212) 599-1615

77 Belfield Road Etobicoke, Ontario M9W 1G6 Phone 9416) 241 6967 FAx (416) 241 3239

REPORT OF ULTRASONIC EXAMINATION

Project:	WTC Tower 4	Project / Job No.:	832
Client:	Tishman	Location:	48th frame - 411/4CD
Contact:	Mike Castagnoli	Technician:	I. Valentin - LVL. II Date: 12/28/11

TESTING PARAMETERS

Equipment Identification		Transducer		Material	
Manufacturer:	GE	Angle:	0° & 70°	Thicknesses:	3/4"
Model:	USM Go	Size:	5/8" X 3/4"	Type:	Carbon Steel
Serial No.:	9121775	Mhz:	2.25	Weld Joint AWS:	TC-U4a
Quality Requirements, Sec. No.:	AWS D1.1 SEC. 6 TABLES 6.2 & 6.7			Welding Process(es):	SMAW

WELD LOCATION AND IDENTIFICATION SKETCH

Comments:

UT Gusset Plate 3/4". Due to Bolt's access was restricted by 4" in three location. See detail 30 on Drawing # E1002 Section K-K/L-L Revision 2 & 3

DISTANCE

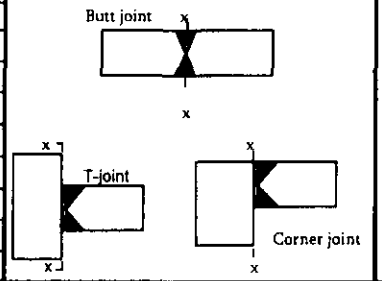

AWS JOINT

GRID LOCATION	Weld Location	TRANSDUCER	Leg(s)	Decibels: Indication Level a	Decibels: Reference Level b	Decibels: Attenuation Factor c	Decibels: Indication Rating d	Discontinuity Evaluation: Length	Discontinuity Evaluation: Angular Distance (Sound Path)	Discontinuity Evaluation: Depth From "A" Surface	Distance: From X	Distance: From Y	Acceptable	Rejectable
		0			75%								X	
		70		52	47	2	3	2"	2	0.7	1/2"	3 7/8"		X
		70			47								X	

The entirebase metal through which ultrasound must travel to test the weld was tested for laminar reflectors using a straight-beam search unit unit conforming to the requirements of 6.22.6 and calibrated in conformance with 6.25.4

We the undersigned, certify that the statements in this record are correct and that the welds were prepared and tested in accordance with the requirements of Section 6 ANSI/AWS D1.1 (2008) Structural Welding Code .

New York City Transit

Department of Capital Program Management
OUTSIDE PROJECTS
2 Broadway, 7th Floor
New York, NY 10004

Date: Jan 3, 2012

Building Department Application Number:

☐ **MANHATTAN**: Mr. Derek Lee, R.A.., 280 Broadway, 3rd Floor, New York, NY 10007
☐ **BROOKLYN**: Mr. Thomas Fariello, R.A., 210 Joralemon Street, 8th Floor, Brooklyn, NY 11201
☐ **QUEENS**: Mr. Ira M. Gluckman, R.A.., 120-55 Queens Blvd., Kew Gardens, NY 11424
☐ **BRONX**: Mr. Werner deFoe, P.E., 1932 Arthur Avenue, 5th Floor, Bronx, NY 10457
☐ **STATEN ISLAND**: Mr. Marshall Kaminer, P.E., 10 Richmond Terrace, Borough Hall 2nd Floor, SI, NY 10301
☒ **CRANES & DERRICKS**: Mr. Ashraf Omran, P.E., Director, 280 Broadway, 5th Floor, New York, NY 10007

LOCATION: WTC Tower 4
150 Greenwich street
New York NY

APPLICANT: Howard Shapiro & Assoc.
303 Merrick Road
Lynbrook NY 11563

DWG NO & DATE:
LP-15 (12/22/2011) Rev. 10
TA-EC-01 (11/28/2011) Rev. 0
LP-37 (11/28/2011) Rev. 4
TA (08/2010) 12.23.11

Dear Sir:

The above applicant recently submitted drawings of proposed building construction at the above location for our review and approval. The drawings listed above have been reviewed only for possible adverse effects on existing New York City Transit facilities resulting from the proposed building construction.

The drawings listed above are ☒ **Approved** ☒ **Approved Except As Noted** LP-15

Subject To:

- All work being performed in accordance with the approved drawings.
- The building plans meeting the Department of Buildings approval in all other respects.
- The construction materials being used for this project, the testing of materials and the inspection of the work meeting the requirements of the Department of Buildings.
- NYCT review will be required for any revisions to this proposed construction or for the use of cranes for construction in this vicinity.

Two copies of each of the above listed drawings, imprinted with the New York City Transit approval stamp dated Jan. 3 2012, were transmitted to the applicant for submission to your Department for a building permit.

This letter does not constitute certification by the NYCT pursuant to the Zoning Resolution of the City of New York as to any matter, including, but not limited to, matters arising under Section 95-041 thereof.

Yours truly,

Examiner: G A. DIGHE

R. Udeshi
Rajen Udeshi, P.E.
Principal Engineer

cc: Applicant Howard Shapiro & Assoc
J. Malvasio, P.E. (with 2 copies of drawings for inspection)
R. Udeshi, P.E.
* T. Jensen, Chief of Bureau Fire Prevention, NYC Fire Department, 9 Metrotech Center, 3rd Floor, Brooklyn, NY 11201
Master File

*(For Tank Installation Only)

NEW YORK CITY TRANSIT
Approved EXCEPT AS NOTED
JAN 03 2017
Is to Effect NYCT Facilities Only
OUTSIDE PROJECTS
ENGINEERING SERVICES DIVISION

12/23/16

STATE OF NEW YORK
LICENSED PROFESSIONAL ENGINEER

CRANE 2A
ELT FMC TG1900
50' BOOM-
INGLE FALL

WORK THIS DWG. WITH DWG. LP-16

PROJECT:	WORLD TRADE CENTER - TOWER 4		
SITE:	150 GREENWICH STREET, NEW YORK, N.Y.		
CLIENT:	TISHMAN CONSTRUCTION CORP.		
TITLE:	NORTH CRANE #2A FMC 1900 ON TOP OF 48th. FLOOR		CONTRACT No: 843
DRAWN:	Samy June 18/2010	CHECKER:	DRAWING No: LP-15
SCALE:		BLOCK:	10

KAJ ENGINEERS INC.
CONSULTING ENGINEERS

March 04, 2011
KAJ Ref: 8794

DCM Erectors, Inc.
110 East 42nd Street
Suite 1710
New York, NY 10017

Attention: Michael Zilnik

Re: World Trade Center Tower Four, New York, NY
Tower Cranes No. 1, 2, and 2A Installations
On-site Inspections

Dear Sir:

As you are aware, I am the Engineer-of-Record for the above referenced tower crane installations on this project. It is a requirement of the New York City Department of Buildings - Cranes and Derricks Division that the Engineer-of-Record for crane installations or his designee inspect tower cranes at installation and prior to their raising or lowering operations. This writing is to supplement my letter of February 26, 2009 and appoint my designees for on-site crane inspections, witnessing of operations and other related matters on this project when I am unable to attend.

My designees are:

Grigoriy Vidgop, PE, DCM Erectors, Inc., or
Lawrence K Shapiro, PE, Howard I Shapiro & Associates Consulting Engineers, P.C.

Yours truly,

Jaak Jurimae, PE

encls: NY Permit LP368

LICENSED PROFESSIONAL ENGINEER
J. JURIMAE
PROVINCE OF ONTARIO

13 TORRENS AVENUE, TORONTO, ONTARIO M4K 2H9
TEL: (416) 429-9780 FAX: (416) 429-9781

THE STATE EDUCATION DEPARTMENT / THE UNIVERSITY OF THE STATE OF NEW YORK / ALBANY, NY 12234

State Board for Engineering and Land Surveying, Education Building, 89 Washington Avenue, 2nd Floor Mezzanine-East Wing
Tel. (518) 474-3817, Ext. 140
Fax (518) 473-6282
E-mail: enginbd@mail.nysed.gov
E-mail: lsurvbd@mail.nysed.gov

LIMITED PERMIT TO PRACTICE PROFESSIONAL ENGINEERING

This permit shall entitle the holder to practice Professional Engineering in New York but only in connection with the specific project listed below:

Permit Number: 000368 **Permit Issue Date: October 8, 2008** **Expiration Date: October 7, 2011**	**Issued To:** **Jaak Jurimae** **13 Torrens Avenue** **Toronto, Ontario M4K 2H9** **Canada**

This is to certify that

JAAK JURIMAE

having applied for a limited permit to practice professional engineering in the State of New York and having submitted satisfactory evidence of established and recognized professional standing in the **Province of Ontario and holds license number 22696017**, and the State Board for Professional Engineering having recommended the issuance of such limited permit; therefore, in accordance with the provisions of Section 7207, subdivision 1, of the Education Law, the said **Jaak Jurimae** is hereby granted this limited permit to practice professional engineering in this state but only in connection with a specific project, viz., **Tower Four – World Trade Center, New York, New York** and is authorized to file plans, specifications, and reports using his **Province of Ontario seal**, as provided in Section 7209 of the Education Law. A copy of this permit shall accompany all documents filed with building officials or others in conjunction with this project.

Jane W. Blair, PE
Executive Secretary

Non-transferable
Valid only for project listed above

Professional Engineers must register triennially with the department to practice the profession in New York State. Limited permit holders whose projects may take longer to complete than the three-year registration period must renew their NYS registration to practice the profession in New York State.

DCM ERECTORS INC.
110 East 42nd St. New York, NY 10017 Phone: (212) 599-1603 Fax: (212) 599-1615
77 Belfield Road Etobicoke, Ontario M9W 1G6 Phone 9416) 241 6967 Fx (416) 241 3239

REPORT OF ULTRASONIC EXAMINATION

Project:	Tower 4	**Project / Job No.:**	832
Client:	DCM Erectors	**Location:**	MRP Steel, SouthPlainfield NJ, Shop # 2
Contact:		**Date:**	10/6/2011

TESTING PARAMETERS

Equipment Identification		**Transducer**		**Material**			
Manufacturer:	GE	Angle:		Type:	Carbon Steel	Thickness:	1" - 3/8"
Model:	USN-58L	Size:	.63X.63	Weld Joint AWS:	As per drawing		
Serial No.:	01RY8D	Mhz:	2.25	Welding Process(es):	FCAW		
Quality Requirements, Sec. No.:	AWS D 1.1 Sec. 6 ' Tabl 6.2						

WELD LOCATION AND IDENTIFICATION SKETCH

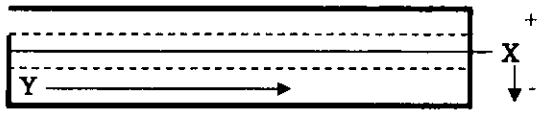

Comments: 1003K1
Crane Tower 4. Drawing 1003
Referencing Dharam Gurmani report 10-6-11
repair Crane Girder M4003-2

GRID / ID / LOCATION	WELD JOINT	TRANSDUCER ANGLE (DEG)	FACE	Leg(s)	Decibels: Indication Level a	Decibels: Reference Level b	Decibels: Attenuation Factor c	Decibels: Indication Rating d	Discontinuity (inches): Length	Discontinuity (inches): Angular Distance (Sound Path)	Discontinuity (inches): Depth From "A" Surface	Distance: From X	Distance: From Y	Acceptable	Rejectable
	M4003-2	0	A			75%								✓	
		70	A	I/II		46								✓	
		70	B	I/II		46								✓	

Inspector: Irson Valentin
Level: II
Date: 10/6/2011

For Reference use only.

From: Lawrence K. Shapiro P.E. [LKShapiro@hisassoc.com]
Sent: Friday, January 20, 2012 9:42 PM
To: Lynch-Jacobs, Maureen
Cc: 'Mike Schiavoni'; 'Dominque Singh'; pgonzalez@hisassoc.com
Subject: WTC4 Crane 2A Assembled Inspection and Load Test

Maureen,

After reviewing the inspection and load test with my inspectors today, I recommend that Crane 2A be permitted to go into service.

Weather permitting, I will go to the office tomorrow to issue the report.

Regards,
Larry Shapiro

-----Original Message-----
From: Lynch-Jacobs, Maureen [mailto:mjacobs@panynj.gov]
Sent: Friday, January 20, 2012 1:23 PM
To: Lawrence Shapiro; Mike Schiavoni
Subject: FW: Crane 2A

Larry,
Can you give me an email?
Mike,
What was the outcome of your test?
Maureen

-----Original Message-----
From: Eddie Meahan [mailto:emeahan@dcmerectors.com]
Sent: Friday, January 20, 2012 1:22 PM
To: 'DSingh@HISAssoc.com'; Lynch-Jacobs, Maureen; 'msfederated@aol.com'; 'arnoldvanhees@gmail.com'; Richard Gilbert
Subject: Crane 2A

Has crane 2A been approved?

NOTICE: THIS E-MAIL AND ANY ATTACHMENTS CONTAIN INFORMATION FROM THE PORT AUTHORITY OF NEW YORK AND NEW JERSEY AND AFFILIATES. IF YOU BELIEVE YOU HAVE RECEIVED THIS E-MAIL IN ERROR, PLEASE NOTIFY THE SENDER IMMEDIATELY, PERMANENTLY DELETE THIS E-MAIL (ALONG WITH ANY ATTACHMENTS), AND DESTROY ANY PRINTOUTS.

From: Lawrence K Shapiro [lkshapiro@hisassoc.com]
Sent: Saturday, January 14, 2012 8:34 AM
To: Eddie Meahan; Richard Gilbert; Lynch-Jacobs, Maureen
Cc: Pierre Gonzalez; Dominique Singh; Chris Leandro; Arnold van Heese
Subject: WTC crane 2A unassembled

See below, report of satisfactory unassembled inspection of four tower sections and climbing frame.

------Original Message------
From: Dominique Singh
To: Lawrence Shapiro
To: Pierre Gonzalez
Cc: Chris Leandro
Cc: Kelly Joyce
Subject: WTC crane 2A unassembled
Sent: Jan 14, 2012 8:04 AM

Visual unassembled inspection of the following sections performed 1-13-12 are satisfactory.
Four tower sections
FE-35
FE-19
FE-20
FE-34
Climbing frame
TGCE-02

Dom's Phone
Sent via BlackBerry by AT&T

Federated Crane Co., L.L.C.
1640 New Market Ave. South Plainfield N.J. 07080
Phone: 732-752-6070
Fax: 732-752-1158

September 21, 2011

NYC Department of Buildings
Cranes and Derricks Division
280 Broadway
New York, New York 10007

Attn: Delia Shumway, P.E., Executive Director

Ref: CD-3705

Dear Ms .Shumway,

We are requesting an. 90 Day extension of CD-3705 presently at 194 Broadway New York, New York. Also know as Fulton Transit Center. The current CD expires on 10-13-2011. Please find attached the new CD-2 forms and our payment of $400.00 renewal fee.

Sincerely,

Michael Schiavoni
Federated Crane

DEPARTMENT OF BUILDINGS
CRANES AND DERRICKS DIVISION
280 BROADWAY
NEW YORK, NY 10007
TEL: (212) 566-4696
FAX: (212) 566-5871

TO FEDERATED CRANE CO. LLC.
MICHAEL J. SCHIAVONI
1640 NEW MARKET AVENUE
SOUTH PLAINFIELD, NJ, 07080

Date: 10/3/2011

RE: CD#: 3705
Manufacturer & Model: FMC LINK-BELT
Serial#: 76G9-1206C

Certificate of Operation Request

Dear Sir / Madam

Please note the following:

- [ ] We are unable to complete your request at this time. Please submit the following:
  - [ ] Complete and submit CD-2 or CD-3 application. (Please find attached)
  - [ ] Pay renewal fee of $_ _____
  - [ ] Submit annual Magnetic Particle Inspection Report (For Lattice Boom, Mast or Jib).
  - [ ] Other: _____
- [x] We received your renewal/registration package on the above machine. Please call the Inspector, Porfirio Irizarry at (212) 566-4696 Monday through Friday from 9:00 AM to 12:00 PM to arrange a date and time for the inspection.

Sincerely,

Cranes and Derricks Division

==========

***** NEW YORK CITY *****

*** DEPARTMENT OF BUILDINGS ***

==========

R E C E I P T

==========

INVOICE #: 61043336 DATE: October 3, 2011 TIME: 03:14 PM

TOTAL PAYMENT RECEIVED: $********400.00

TYPE OF TRANSACTION	AMOUNT	PAY TYPE
C & D: CD RENEWAL	400.00	3119 CK
APPL. #: CD003705	05111 000303 00250 CD	

RECEIVED FROM: CENTRAL ACCOUNTING STATION: 11

==========

NYC BUILDINGS

Cranes and Derricks Division
Applicants Statement of Notification to Community Boards

Please Submit 1 Copy for Cranes & Derricks
Plus Copies For Your Own Use

Application Type: _____

Application No.: _____

Date filed: _____

Borough: Manhattan

Community Board: 1

Address: 49-51 Chambers Street, Room 715

New York, NY 10007

I, Gregory Vidgop, hereby state that in accordance with Department of Buildings requirements, I will mail or fax a copy of this notice within 24 hours to the above Community Board regarding the filing of this project.

Signature _____ Date _____ Telephone number 212 599-1603

Block: 58 Lot: 1

Location: World Trade Center - Tower 4

1. Number of Stories _____
2. Occupancy N/A
(Multiple Dwelling, Commercial, Garage, Stores and Offices, Store and Factory, Bank and Class A, Etc.)
3. No of Apts _____ Current _____ Proposed _____
3A. No of SRO's _____ Current _____ Proposed _____
4. Work Proposed Use of tower crane TG1900 to erect structural steel for floors 50 to 66 and some mechanical equipment.
5. Name and Address of

Applicant Gregory Vidgop Address 110 East 42nd Street, Suite 1704, New York, NY 10017

Owner Silverstein Properties Address 150 Greenwich Street, New York, NY

Architect _____ Address _____

Engineer _____ Address _____

CD-16 REV. 12/03

NYC BUILDINGS

Equipment Owner Identification Form

Application Must Be Typewritten

1. Equipment Description

	Manufacturer: FMC LINK-BELT	Model: TG-1900			Serial No.: 76G9-1206C				Year: 1979		
✓	Climber Tower & Mobile Cranes:	Max. Tower: 160	ft	Max. Boom: 200	ft	Max. Jib: 70	ft				
	Max. Combined Length	Tower: 160	ft	Boom: 200	ft	Jib: 70	ft	Total: 430	ft		
	Derricks:	Mast:	ft	Boom:	ft	Sill:	ft	Leg:	ft		
	Workplatform:	Single Mast: Mast:	ft	Width:	ft						
		Double Mast: Mast:	ft	Width:	ft						

4. Owner Statement

Last Name: SCHIAVONI First Name: MICHAEL M.I.: J

Title: MEMBER Telephone: (917) 797-3441 Fax: (732) 752-1158

Business Name: FEDERATED CRANE

Address: 1640 NEW MARKET AVE.

City: SOUTH PLAINFIELD State: NEW JERSEY ZIP: 07080

- This is to certify that I, the undersigned, am the owner or an officer of the company that owns equipment.
- I am aware that in order to use this machine in New York City, it must first be issued a Temporary Certificate of Approval and Operation (TCAO) which requires the equipment passing an annual inspection conducted by the Hoist and Rigging section of the Cranes and Derricks Division.
- In addition, I am aware that the equipment must demonstrate compliance with all applicable safety device requirements, pertaining department rules and regulations, and relevant sections of the New York City Building Code.
- In the absence of complete compliance, my application may be denied and the Temporary Certificate of Approval and Operation revoked.

Signature: Date: 9-28-2006

NYC BUILDINGS

DESIGNATION OF SAFETY COORDINATOR

Crane / Derrick / Work Platform CN# _____ COI#: 3705

Address / Borough: WTC - Tower 4 Block: _____ Lot: _____

Owner or Contractor

I have been apprised of the requirements to provide flag person to stop pedestrian traffic when lifting over the sidewalk and to stop vehicular traffic when lifting over the roadway. I am also aware that closing of sidewalk or roadway or temporary obstruction of same requires concurrent approval from the Department of Transportation. Mr/ Ms Joseph Miloscia, representing the owner or contractor, has been designated as safety coordinator to ensure that these safety precautions are adhered to.

Name: Larry Davis Tel. No: (212) 599-1603

Address: 110 East 42nd Street, Suite 1704, New York, NY 10017

Signature of Owner or Contractor: _____ Date: Dec-07-2011

Safety Coordinator

I, Joseph Miloscia (NAME) am a P.E., R.A. or a person having at least 5 years of construction experience.

I hereby certify that I will act as the designated Safety Coordinator and shall be responsible for the control of pedestrian and vehicular traffic within the designated hoisting areas. I will also supervise compliance with the Crane Notice Application and the drawings which form part of this On-Site Hoisting Device Application.

Name: Joseph Miloscia Tel. No: (212) 599-1603

Address: 110 East 42nd Street, Suite 1704, New York, NY 10017

Signature of Safety Coordinator: Joseph Miloscia Date: 12/07/11

NYC BUILDINGS

Crane / Derrick / Mobile Work Platform Approval and Operation Application / Certificate

Please File 2 Copies
Application Must Be Typewritten

For Internal Use Only	
CD Number	
Date Received	Fee Paid
Invoice No:	

1. Application Type

	Original		Renewal		Change		
Equipment Type:		Mobile Crane	✓	Fix / Climber Tower Crane		Derrick	Work Platform

2 CD Number

3. Applicant

Send correspondence to: ☐ Applicant ☐ Owner

Applicant	Owner
Name: Richard Gilbert	Name: Larry DavisPresident
Title: Safety & Operations Manager E-mail richard@dcmerectors.com	Title: President E-mail ld@dcmerectors.com
Company: Federated Equipment Co., L.L.C.	Company: Federated Equipment Co., L.L.C.
Address: 110 East 42nd Street, Suite 1704	Address: 110 East 42nd Street, Suite 1704
City: New York State: NY Zip: 10017	City: New York State: NY Zip: 10017
Telephone: (212) 599 - 1603 Fax: (212) 599 - 1615	Telephone: (212) 599 - 1603 Fax: (212) 599 - 1615

4. Crane / Derrick / Work Platform Information

Prototype No.:
Manufacturer: Refer to seperate CD2 for FMC-TG1900 CD3705
Model: Model Year:
Serial Number:

Transmission		Power	
	Hydraulic		Gas
	Mechanical		Diesel
Capacity:			Electric

Drums

Number of Drums:

No.	Wire Rope Size
1	in.
2	in.
3	in.
4	in.

Work Platform Information

Platform Type:

	Single Mast
	Twin Mast
	Free Standing

Platforms I.D.'s:

5. Tower / Boom / Jib Section Information

Maximum Configuration: Tower Crane: Tower: Boom: Jib: Total: **Lift Crane:** Boom: Jib: Total:

	Latticed	Solid	
Tower/Mast Section I.D.			FE-21, FE-35, FE-19, FE-20, FE-34, TGT13-019, TGT13-021, TGT13-023
Boom Section I.D.			Refer to seperate CD2 for FMC-TG1900 CD3705
Jib / Sill / Leg Section I.D.			

6. Equipment Dimension

Overall Carrier		Tower / Mast Property		Derrick Information			
Length ft	Width ft	Tower/Mast Depth	ft	Type			
Width With Outriggers Extended	ft	Tower/Mast Width	ft		Chicago Boom		Guy Derrick
Tailswing	ft	Tower/Mast Height	ft		Gin Pole		Stiffleg Derrick

7. Statement and Signatures

- The Owner certifies that he will comply with the requirements of § 15.0 of Reference Standards RS 19-2 of the Building Code regarding "Inspection Required by Owner for Cranes & Derricks."
- Falsification of any statement is a misdemeanor under § 28-124 of the Administrative Code and is punishable by a fine or imprisonment, or both.
- Falsification of any statement is a misdemeanor under § 28-124 of the Administrative Code and is punishable by a fine or imprisonment, or both.

Applicant's Signature	Date	Owner's Signature	Date
	November 29, 2011		November 29, 2011

For Internal Use Only	TCAO Issued For:
	☐ This Site Only
	Expiration Date

Issued by: Date	Approved by Cranes & Derricks Authorized Signature	Date

NYC BUILDINGS

Notification of Raising or Lowering of Climber or Tower Crane

The completed application must reach the Cranes and Derricks Division
48 hours before the raising or lowering of a Tower Crane.

Please file 2 copies
Application must be typewritten

1. Location Of Job

Borough: Manhattan

House No(s).: 150 Street Name: GREENWHICH

Special Place Name: WTC - Tower 4

2. Crane Information

C.D. No.: 3705 C.N. No.: Phase:

✓ External Climbing Crane | Internal Climbing Crane

Dates(s) of Proposed Raising or Lowering: February 09, 2012 Day of the Week: 1:00 PM

Note: If the crane raising / lowering operation is to be performed on weekends, holidays, or other than normal working hours, an after-hour work variance must be submitted and approved by the Cranes & Derricks Division prior to commencement of work.

3. Supervisor's Statement

Last Name: Vanhees First Name: Arnold M.I.:

Business Name: DCM Erectors, Inc.

Address: 110 East 42nd Street, Suite 1704

City: New York State: NY Zip: 10017

Phone: (212) 599-1603 Fax: (212) 599-1615

I, Arnold Vanhees, am a representative of the crane manufacturer, the owner of the crane or the contractor. I have at least 3 years of experience in construction or erection of tower crane and I have been designated as the supervisor in charge of raising or lowering the above crane. I will personally check that all horizontal bracing, collars, shoring and wedges in conformance of the drawings approved by the Cranes & Derricks Division. I will also ensure the tower crane manufacturer's climbing procedure be strictly followed.

Falsification of any statement is a misdemeanor under Section 26-124 of the Administrative Code and is punishable by a fine, imprisonment, or both.

Signature **Date** February 06, 2012

4. Owner or Contracator Information

Last Name: Davis First Name: Larry M.I.:

Business Name: DCM Erectors, Inc.

Address: 110 East 42nd Street, Suite 1704

City: New York State: NY Zip: 10017

Signature **Date** February 06, 2012

NYC BUILDINGS

Notification of Raising or Lowering of Climber or Tower Crane

The completed application must reach the Cranes and Derricks Division
48 hours before the raising or lowering of a Tower Crane.

Please file 2 copies
Application must be typewritten

1. Location Of Job

Borough: Manhattan

House No(s).: 150 Street Name: GREENWHICH

Special Place Name: WTC - Tower 4

2. Crane Information

C.D. No.: 3705 C.N. No.: Phase:

✓ External Climbing Crane | Internal Climbing Crane

Dates(s) of Proposed Raising or Lowering: February 09, 2012 Day of the Week: 1:00 PM

Note: If the crane raising / lowering operation is to be performed on weekends, holidays, or other than normal working hours, an after-hour work variance must be submitted and approved by the Cranes & Derricks Division prior to commencement of work.

3. Supervisor's Statement

Last Name: Vanhees First Name: Arnold M.I.:

Business Name: DCM Erectors, Inc.

Address: 110 East 42nd Street, Suite 1704

City: New York State: NY Zip: 10017

Phone: (212) 599-1603 Fax: (212) 599-1615

I, Arnold Vanhees, am a representative of the crane manufacturer, the owner of the crane or the contractor. I have at least 3 years of experience in construction or erection of tower crane and I have been designated as the supervisor in charge of raising or lowering the above crane. I will personally check that all horizontal bracing, collars, shoring and wedges in conformance of the drawings approved by the Cranes & Derricks Division. I will also ensure the tower crane manufacturer's climbing procedure be strictly followed.

Falsification of any statement is a misdemeanor under Section 26-124 of the Administrative Code and is punishable by a fine, imprisonment, or both.

Signature **Date** February 06, 2012

4. Owner or Contracator Information

Last Name: Davis First Name: Larry M.I.:

Business Name: DCM Erectors, Inc.

Address: 110 East 42nd Street, Suite 1704

City: New York State: NY Zip: 10017

Signature **Date** February 06, 2012

NYC BUILDINGS

Crane / Derrick / Mobile Work Platform Approval and Operation Application / Certificate

Please File 2 Copies
Application Must Be Typewritten

For Internal Use Only	
CD Number	
Date Received	Fee Paid
Invoice No:	

2 CD Number

1. Application Type

	Original		Renewal		Change		
Equipment Type:		Mobile Crane	✓	Fix / Climber Tower Crane		Derrick	Work Platform

3. Applicant Send correspondence to: ☐ Applicant ☐ Owner	Owner
Name: Richard Gilbert	Name: Larry DavisPresident
Title: Safety & Operations Manager E-mail richard@dcmerectors.com	Title: President E-mail ld@dcmerectors.com
Company: Federated Equipment Co., L.L.C.	Company: Federated Equipment Co., L.L.C.
Address: 110 East 42nd Street, Suite 1704	Address: 110 East 42nd Street, Suite 1704
City: New York State: NY Zip: 10017	City: New York State: NY Zip: 10017
Telephone: (212) 599 - 1603 Fax: (212) 599 - 1615	Telephone: (212) 599 - 1603 Fax: (212) 599 - 1615

4. Crane / Derrick / Work Platform Information

Prototype No.:				Drums		Work Platform Information	
Manufacturer: Refer to seperate CD2 for FMC-TG1900 CD3705							
Model:	Model Year:			Number of Drums:		Plaftorm Type:	
Serial Number:				No.	Wire Rope Size		Single Mast
Transmission		Power		1	in.		Twin Mast
	Hydraulic		Gas	2	in.		Free Standing
	Mechanical		Diesel	3	in.	Platforms I.D.'s:	
Capacity:			Electric	4	in.		

5. Tower / Boom / Jib Section Information

Maximum Configuration:	Tower Crane: Tower:	Boom:	Jib:	Total:	Lift Crane: Boom:	Jib:	Total:
	Latticed	Solid					

DCM ERECTORS INC.
110 East 42nd St.- 1704, New York, NY 10017, Phone: (212) 599-1603, Fax: (212) 599-1615
25 Belfield Road, Etobicoke, Ontario M9W 1E8, Phone: (416) 241 - 6967, Fax: (416) 241 - 3239

TOWER 4 - CLIMBING CRANE 2A

CLIMB 01

Rigging Crew List:

Arnold Van Hees – Tower Crane Rigger
Ed Meahan – Tower Crane Rigger
Ralph Jensen – Competent Rigger/Superintendent

Fred Bartz – Crane Operator (Crane 2-CD#4193)
Michael Prendergast– Oiler (Crane 2)

Joe Miloseia – Safety Manager/Spotter

Rigging employees (Crane 2):

John Long - Foreman
Tim Long - Signalman
Ed Todesco – Connector
Garry Holder - Connector
Jeff Birdsall - Hook On
Colm McPartland – Tagline

NYC BUILDINGS

Notification of Raising or Lowering of Climber or Tower Crane

The completed application must reach the Cranes and Derricks Division
48 hours before the raising or lowering of a Tower Crane.

Please file 2 copies
Application must be typewritten

1. Location Of Job

Borough: Manhattan
House No(s).: 150 Street Name: GREENWHICH
Special Place Name: WTC - Tower 4

2. Crane Information

C.D. No.: 3705 C.N. No.: Phase:
✓ External Climbing Crane | | Internal Climbing Crane
Dates(s) of Proposed Raising or Lowering: February 09, 2012 Day of the Week: 1:00 PM

Note: If the crane raising / lowering operation is to be performed on weekends, holidays, or other than normal working hours, an after-hour work variance must be submitted and approved by the Cranes & Derricks Division prior to commencement of work.

3. Supervisor's Statement

Last Name: Vanhees First Name: Arnold M.I.:
Business Name: DCM Erectors, Inc.
Address: 110 East 42nd Street, Suite 1704
City: New York State: NY Zip: 10017
Phone: (212) 599-1603 Fax: (212) 599-1615

I, Arnold Vanhees, am a representative of the crane manufacturer, the owner of the crane or the contractor. I have at least 3 years of experience in construction or erection of tower crane and I have been designated as the supervisor in charge of raising or lowering the above crane. I will personally check that all horizontal bracing, collars, shoring and wedges in conformance of the drawings approved by the Cranes & Derricks Division. I will also ensure the tower crane manufacturer's climbing procedure be strictly followed.

Falsification of any statement is a misdemeanor under Section 26-124 of the Administrative Code and is punishable by a fine, imprisonment, or both.

Signature **Date** February 06, 2012

4. Owner or Contracator Information

Last Name: Davis First Name: Larry M.I.:
Business Name: DCM Erectors, Inc.
Address: 110 East 42nd Street, Suite 1704
City: New York State: NY Zip: 10017

Signature **Date** February 06, 2012

MAGNETIC PARTICLE INSPECTION REPORT

CLIENT DCM Erectors Inc. 110 East 42nd Street New York, NY 10017	**LOCATION** South Plainfield, NJ	**INSPECTION DATE** 10/20/11 & 10/24/11	
	CAN JOB NO. J12M1002	**REPORT NO.** 12M1102	
	CLIENT ORDER NO.	**SHEET** 1	**OF** 1

COMPONENT/DESCRIPTION/DRAWING NO.
Tower Sections – See Below

MATERIAL Carbon Steel		**SURFACE CONDITION** Clean / Painted
PROCEDURE/WORK INSTRUCTION/TECHNIQUE MPI IP0019		**ACCEPTANCE STANDARD**
EQUIPMENT Magna Flux Y-7 AC/DC 111	**POWER/CURRENT** 115V-60Hz	**MATERIAL THICKNESS**
METHOD MPI	**MEDIUM** Circle Systems Dusting Powder 63 RED 16223	**BACKGROUND** Black

RESULTS
The magnetic particle inspection was completed using a Magna Flux Y-7 yoke and dry particle technique. Every weld on the following list of Tower Sections was inspected 100% from two planes to insure full coverage.

No relevant indications were found during the inspection.

COMPONENTS	LENGTH
FE-21	13'–7½" X 9'-9" X 9'-9"
FE-35	13'–7½" X 9'-9" X 9'-9"
FE-19	13'–7½" X 9'-9" X 9'-9"
FE-20	13'–7½" X 9'-9" X 9'-9"
FE-34	13'–7½" X 9'-9" X 9'-9"
TGT13-019	13'–7½" X 9'-9" X 9'-9"
TGT13-021	13'–7½" X 9'-9" X 9'-9"
TGT13-023	13'–7½" X 9'-9" X 9'-9"

This report relates exclusively to the work ordered and/or the item(s) inspected. It shall not be reproduced except in full without the approval of the inspection body and the client.

CAN INSPECTOR	ISSUING AUTHORITY	CLIENT
SIGN	**SIGN**	**SIGN**
NAME Brian Harvey	**NAME**	**NAME** Richard Gilbert
QUALS ASNT TC1A MT LII	**DATE**	**DATE** October 26, 2011

CAN

NYC BUILDINGS

Crane / Derrick and Work Platform Plumbness And Torque Notification/ Anchor Bolt Pull Out Test

Please file 2 Copies
Application Must Be Typewritten

1. Location of Job

Borough: Manhattan

House No.(s): 150 Street Name: Greenwich

Special Place Name: WTC - Transit Hall - West Tower Crane

2. Crane / Work Platform Information

Manufacturer: FMC Link-Belt Model No.: TG 1900 C.D. No.: 3705 C.N. No.:

✓ Luffing Boom: ☐ Horizontal Boom ☐ Articulating Jib ☐ Other:

Tower Crane: ☐ External Climbing Crane ☐ Internal Climbing Crane Work Platform: ☐ Single Mast ☐ Double Mast

3. Surveyor's Information

Last Name: CONKLIN First Name: JOHN M.I.:

Business Name: DCM Erectors, Inc Telephone: (212) 599-1603 Fax: (212) 599-1615

Address: 110 East 42nd St., Suite 1704

City: New York State: NY Zip: 10017

This is to Certify that I have measured the out of plumbness for 8 tower sections of the above crane with a tower height of 81' feet 9" inches. The lean towards the following directions indicated below was determined to be:

1/8 inches East/West (Direction); 1/8 inches North/South (Direction);

Signature Date 02/09/12 Date of Survey 02/09/12

STATE OF NEW YORK GREGORY VIDGOP No. 078380 LICENSED PROFESSIONAL ENGINEER

4. Tower / Mast Bracing Anchor Bolt Pull Out Test

Testing Laboratory: Telephone: Fax:

Address:

City: State: Zip:

Person Performing test: Title: Lic. No.: State:

I, the undersigned, am a P.E., R.A., or qualified technican of the above testing laboratory. I have performed / witnessesed the anchor bolt pull-out test for bracing support of above hoisting equipment installation. I hereby certify that the anchors safely sustained the test pull without failure.

Location	Elev. / Floor	# Tested / Total # of Anchors	Wall Construction	Attachment Type	Bolt Size	Test Load	Design Load
1		/					
2		/					
3		/					
4		/					
5		/					

Signature Date Date of Survey

5. Supervisor's Statement

Last Name: Vanhees First Name: Arnold M.I.:

Business Name: DCM Erectors, Inc. Telephone: (212) 599-1603 Fax: (212) 599-1615

Address: 110 East 42nd St., Suite 1704

City: New York State: NY ZIP: 10017

This is to certify that the above installed Six sections were torqued to Turn of the nut method ft. lbs on by iron workers under my supervision. The manufacturer's recommended bolt-torque value is ft. lbs The Manufacturer's allowable out of plumbness is: 1"/1200" inches East/West (Direction); 1"/1200" inches North/South (Direction);

Signature of Licensed Rigger 02-09-12 Date

CD-6 Rev. 12/03

NYC BUILDINGS

Crane / Derrick and Work Platform Plumbness And Torque Notification/ Anchor Bolt Pull Out Test

Please file 2 Copies
Application Must Be Typewritten

1. Location of Job

Borough: Manhattan

House No.(s): 150 Street Name: Greenwich

Special Place Name: WTC - Transit Hall - West Tower Crane

2. Crane / Work Platform Information

Manufacturer: FMC Link-Belt Model No.: TG 1900 C.D. No.: 3705 C.N. No.:

✓ Luffing Boom: ☐ Horizontal Boom ☐ Articulating Jib ☐ Other:

Tower Crane: ☐ External Climbing Crane ☐ Internal Climbing Crane Work Platform: ☐ Single Mast ☐ Double Mast

3. Surveyor's Information

Last Name: CONKLIN First Name: JOHN M.I.:

Business Name: DCM Erectors, Inc Telephone: (212) 599-1603 Fax: (212) 599-1615

Address: 110 East 42nd St., Suite 1704

City: New York State: NY Zip: 10017

This is to Certify that I have measured the out of plumbness for 6 tower sections of the above crane with a tower height of 81' feet 9" inches. The lean towards the following directions indicated below was determined to be: 1/8 inches East/West (Direction); 1/8 inches North/South (Direction);

Signature Date 02/09/12 Date of Survey 02/09/12

STATE OF NEW YORK GREGORY VIDGOR No. 07938 PROFESSIONAL ENGINEER

4. Tower Mast Bracing Anchor Bolt Pull Out Test

Testing Laboratory: Telephone: Fax:

Address:

City: State: Zip:

Person Performing test: Title: Lic. No.: State:

I, the undersigned, am a P.E., R.A., or qualified technican of the above testing laboratory. I have performed / witnessesed the anchor bolt pull-out test for bracing support of above hoisting equipment installation. I hereby certify that the anchors safely sustained the test pull without failure.

Location	Elev. / Floor	# Tested / Total # of Anchors	Wall Construction	Attachment Type	Bolt Size	Test Load	Design Load
1		/					
2		/					
3		/					
4		/					
5		/					

Signature Date Date of Survey

5. Supervisor's Statement

Last Name: Vanhees First Name: Arnold M.I.:

Business Name: DCM Erectors, Inc. Telephone: (212) 599-1603 Fax: (212) 599-1615

Address: 110 East 42nd St., Suite 1704

City: New York State: NY ZIP: 10017

This is to certify that the above installed Six sections were torqued to Turn of the nut method ft. lbs on by Iron workers under my supervision. The manufacturer's recommended bolt-torque value is ft. lbs The Manufacturer's allowable out of plumbness is: 1"/1200" inches East/West (Direction); 1"/1200" inches North/South (Direction);

Signature of Licensed Rigger Date 02-09-12

CD-6 Rev. 12/03

NYC BUILDINGS

Crane / Derrick and Work Platform Plumbness And Torque Notification/ Anchor Bolt Pull Out Test

Please file 2 Copies
Application Must Be Typewritten

1. Location of Job

Borough: Manhattan

House No.(s): 150 Street Name: Greenwich

Special Place Name: WTC - Transit Hall - West Tower Crane

2. Crane / Work Platform Information

Manufacturer: FMC Link-Belt Model No.: TG 1900 C.D. No.: 3705 C.N. No.:

✓ Luffing Boom: ☐ Horizontal Boom ☐ Articulating Jib ☐ Other:

Tower Crane: ☐ External Climbing Crane ☐ Internal Climbing Crane Work Platform: ☐ Single Mast ☐ Double Mast

3. Surveyor's Information

Last Name: CONKLIN First Name: JOHN M.I.:

Business Name: DCM Erectors, Inc Telephone: (212) 599-1603 Fax: (212) 599-1615

Address: 110 East 42nd St., Suite 1704

City: New York State: NY Zip: 10017

This is to Certify that I have measured the out of plumbness for 6 tower sections of the above crane with a tower height of 81' feet 8" inches. The lean towards the following directions indicated below was determined to be: 1/8 inches East/West (Direction); 1/8 inches North/South (Direction);

Signature Date 02/09/12 Date of Survey 02/09/12

STATE OF NEW YORK GREGORY VIDGOR No. 079380 LICENSED PROFESSIONAL ENGINEER

4. Tower / Mast Bracing Anchor Bolt Pull Out Test

Testing Laboratory: Telephone: Fax:

Address

City State: Zip:

Person Performing test: Title: Lic. No.: State:

I, the undersigned, am a P.E., R.A., or qualified technican of the above testing laboratory. I have performed / witnessesed the anchor bolt pull-out test for bracing support of above hoisting equipment installation. I hereby certify that the anchors safely sustained the test pull without failure.

Location	Elev. / Floor	# Tested / Total # of Anchors	Wall Construction	Attachment Type	Bolt Size	Test Load	Design Load
1		/					
2		/					
3		/					
4		/					
5		/					

Signature Date Date of Survey

5. Supervisor's Statement

Last Name: Vanhees First Name: Arnold M.I.:

Business Name: DCM Erectors, Inc. Telephone: (212) 599-1603 Fax: (212) 599-1615

Address: 110 East 42nd St., Suite 1704

City: New York State: NY ZIP: 10017

This is to certify that the above installed Six sections were torqued to Turn of the nut method ft. lbs on by iron workers under my supervision. The manufacturer's recommended bolt-torque value is ft. lbs The Manufacturer's allowable out of plumbness is: 1"/1200" inches East/West (Direction); 1"/1200" inches North/South (Direction).

Signature of Licensed Rigger Date 02-09-12

CD-6 Rev. 12/03

NYC BUILDINGS

Notification of Raising or Lowering of Climber or Tower Crane

The completed application must reach the Cranes and Derricks Division
48 hours before the raising or lowering of a Tower Crane.

Please file 2 copies
Application must be typewritten

1. Location Of Job

Borough: Manhattan

House No(s).: 150 Street Name: GREENWHICH

Special Place Name: WTC - Tower 4

2. Crane Information

C.D. No.: 3705 C.N. No.: Phase:

✓ External Climbing Crane | Internal Climbing Crane

Dates(s) of Proposed Raising or Lowering: February 09, 2012 Day of the Week: 1:00 PM

Note: If the crane raising / lowering operation is to be performed on weekends, holidays, or other than normal working hours, an after-hour work variance must be submitted and approved by the Cranes & Derricks Division prior to commencement of work.

3. Supervisor's Statement

Last Name: Vanhees First Name: Arnold M.I.:

Business Name: DCM Erectors, Inc.

Address: 110 East 42nd Street, Suite 1704

City: New York State: NY Zip: 10017

Phone: (212) 599-1603 Fax: (212) 599-1615

I, Arnold Vanhees, **am a representative of the crane manufacturer, the owner of the crane or the contractor. I have at least 3 years of experience in construction or erection of tower crane and I have been designated as the supervisor in charge of raising or lowering the above crane. I will personally check that all horizontal bracing, collars, shoring and wedges in conformance of the drawings approved by the Cranes & Derricks Division. I will also ensure the tower crane manufacturer's climbing procedure be strictly followed.**

Falsification of any statement is a misdemeanor under Section 26-124 of the Administrative Code and is punishable by a fine, imprisonment, or both.

Signature Date February 06, 2012

4. Owner or Contracator Information

Last Name: Davis First Name: Larry M.I.:

Business Name: DCM Erectors, Inc.

Address: 110 East 42nd Street, Suite 1704

City: New York State: NY Zip: 10017

Signature Date February 06, 2012

NYC BUILDINGS

Crane / Derrick / Mobile Work Platform Approval and Operation Application / Certificate

Please File 2 Copies
Application Must Be Typewritten

For Internal Use Only	
CD Number	
Date Received	Fee Paid
Invoice No:	

1. Application Type							
	Original			Renewal		Change	
Equipment Type:		Mobile Crane	✓	Fix / Climber Tower Crane		Derrick	Work Platform

2 CD Number

3. Applicant Send correspondence to: ☐ Applicant ☐ Owner	Owner
Name: Richard Gilbert	Name: Larry DavisPresident
Title: Safety & Operations Manager E-mail richard@dcmerectors.com	Title: President E-mail ld@dcmerectors.com
Company: Federated Equipment Co., L.L.C.	Company: Federated Equipment Co., L.L.C.
Address: 110 East 42nd Street, Suite 1704	Address: 110 East 42nd Street, Suite 1704
City: New York State: NY Zip: 10017	City: New York State: NY Zip: 10017
Telephone: (212) 599 - 1603 Fax: (212) 599 - 1615	Telephone: (212) 599 - 1603 Fax: (212) 599 - 1615

4. Crane / Derrick / Work Platform Information						
Prototype No.:			Drums		Work Platform Information	
Manufacturer: Refer to seperate CD2 for FMC-TG1900 CD3705						
Model:	Model Year:		Number of Drums:		Platform Type:	
Serial Number:			No.	Wire Rope Size		Single Mast
Transmission		Power	1	in		Twin Mast
	Hydraulic	Gas	2	in.		Free Standing
	Mechanical	Diesel	3	in.	Platforms I.D.'s:	
Capacity:		Electric	4	in.		

5. Tower / Boom / Jib Section Information			
Maximum Configuration: Tower Crane: Tower: Boom: Jib: Total:			Lift Crane: Boom: Jib: Total:
	Latticed	Solid	
Tower/Mast Section I.D.			FE-21, FE-35, FE-19, FE-20, FE-34, TGT13-019, TGT13-021, TGT13-023
Boom Section I.D.			Refer to seperate CD2 for FMC-TG1900 CD3705
Jib / Sill / Leg Section I.D.			

6. Equipment Dimension					
Overall Carrier		Tower / Mast Property		Derrick Information	
Length ft	Width ft	Tower/Mast Depth ft		Type	
Width With Outriggers Extended ft		Tower/Mast Width ft		Chicago Boom	Guy Derrick
Tailswing ft		Tower/Mast Height ft		Gin Pole	Stiffleg Derrick

7. Statement and Signatures

- The Owner certifies that he will comply with the requirements of § 15.0 of Reference Standards RS 19-2 of the Building Code regarding "Inspection Required by Owner for Cranes & Derricks."
- Falsification of any statement is a misdemeanor under § 26-124 of the Administrative Code and is punishable by a fine or imprisonment, or both
- Falsification of any statement is a misdemeanor under § 26-124 of the Administrative Code and is punishable by a fine or imprisonment, or both.

Applicant's Signature	Date	Owner's Signature	Date
	November 29, 2011		November 29, 2011

For Internal Use Only	TCAO Issued For:
	☐ This Site Only
	Expiration Date
Issued by: Date	Approved by Cranes & Derricks Authorized Signature Date

MAGNETIC PARTICLE INSPECTION REPORT

CLIENT DCM Erectors Inc. 110 East 42nd Street New York, NY 10017	**LOCATION** South Plainfield, NJ	**INSPECTION DATE** 10/20/11 & 10/24/11	
	CAN JOB NO. J12M1002	**REPORT NO.** 12M1102	
	CLIENT ORDER NO.	**SHEET** 1	**OF** 1

COMPONENT/DESCRIPTION/DRAWING NO.
Tower Sections – See Below

MATERIAL Carbon Steel		**SURFACE CONDITION** Clean / Painted
PROCEDURE/WORK INSTRUCTION/TECHNIQUE MPI IP0019		**ACCEPTANCE STANDARD**
EQUIPMENT Magna Flux Y-7 AC/DC 111	**POWER/CURRENT** 115V-60Hz	**MATERIAL THICKNESS**
METHOD MPI	**MEDIUM** Circle Systems Dusting Powder 63 RED 16223	**BACKGROUND** Black

RESULTS

The magnetic particle inspection was completed using a Magna Flux Y-7 yoke and dry particle technique. Every weld on the following list of Tower Sections was inspected 100% from two planes to insure full coverage.

No relevant indications were found during the inspection.

COMPONENTS	LENGTH
FE-21	13'–7½" X 9'-9" X 9'-9"
FE-35	13'–7½" X 9'-9" X 9'-9"
FE-19	13'–7½" X 9'-9" X 9'-9"
FE-20	13'–7½" X 9'-9" X 9'-9"
FE-34	13'–7½" X 9'-9" X 9'-9"
TGT13-019	13'–7½" X 9'-9" X 9'-9"
TGT13-021	13'–7½" X 9'-9" X 9'-9"
TGT13-023	13'–7½" X 9'-9" X 9'-9"

This report relates exclusively to the work ordered and/or the item(s) inspected. It shall not be reproduced except in full without the approval of the inspection body and the client.

CAN INSPECTOR	ISSUING AUTHORITY	CLIENT
SIGN	**SIGN**	**SIGN**
NAME Brian Harvey	**NAME**	**NAME** Richard Gilbert
QUALS ASNT TC1A MPT LII	**DATE**	**DATE** October 26, 2011

DCM ERECTORS INC.

110 East 42nd Street Suite 1710
New York, NY 10017
United States of America

Phone: (212) 599-1603
Fax: (212) 599-1615

WELDING INSPECTION REPORT

PROJECT: World Trade Center	**INSPECTOR: M. Williams**
PROJECT ADDRESS: WORLD TRADE CENTER Tower Four New York, NY	**DATE: 12/28/11**
ACCEPTANCE STANDARDS: AWS D1.1 (2010)	REF. SPEC: 05100
ACCEPTANCE CRITERIA: DRAWINGS & PROJECT SPECIFICATIONS	DWG: E1002 & E1003[3]

LOCATIONS: **4L - 4CD/409 - 408**

FRAMING / GRID **ABOVE 48TH CRANE 2A BASE FRAME**

DET. 6, 7, 16, 18, 21, 23 & 30/ SECT. A-A, B-B, K-K & R-R

STAGES OF INSPECTION:	Base Metal Preparation	X	Fit-up & Alignment	X	Root Pass X
	Intermediate Passes:	X	Final Inspection:	X	Re-Inspection: ☐

MACHINE TYPE: LINCOLN	**AMPS: 139-188**	**POLARITY: DC+**
MAKE: XMT 350VS	**PROCESS: SMAW**	**POSITION: 3G, 2F, 3F & 4F**
AWS JOINT DESIGN:	**THICKNESS: .750", .312"- .625"**	**WELD SIZE : .750", .250"- .375"**
[Groove]/[Fillet]/ Plug / Spot / Slot / Other:	**ELECTRODE: E7018**	
BASE MATERIAL: 992 GR. 50/992 GR. 50	**DIAMETER (IF PIPE):**	

WELDER	**LICENSE #**
KENWYN NORIEGA	7194

SUMMARY OF INSPECTION:

ANGLES WELDED TO GUSSET.
PLATE WELDED TO NODE.
PLATE WELDED TO REINFORCING PLATE AND COLUMN FLANGE.

INSPECTION STATUS:	Accepted:	X	Rejected:	☐	Work in Progress: ☐

DCM ERECTORS INC.

110 East 42nd Street Suite 1710
New York, NY 10017
United States of America

Phone: (212) 599-1603
Fax: (212) 599-1615

DAILY INSPECTION REPORT

PROJECT: World Trade Center Tower Four	**Inspector: M.Williams**
PROJECT ADDRESS: World Trade Center Tower Four, N.Y., N.Y.	**DATE: 12/28/11**

TRANSFER GIRDER [illegible]

AT ELEVATION: +1028'- 4 1/2"

PLATES AT GIRDERS BOLTED TO PLATES AT GIRDERS COMPLETED AND ACCEPTED

DET. 4, 8, 10 & 12

AT ELEVATION: +1036'- 4 1/2"

PLATES AT GIRDERS BOLTED TO PLATES AT GIRDERS COMPLETED AND ACCEPTED

DET. 4 & 8

ANGLE & GUSSET BRACE

AT ELEVATION: +1028'- 4 1/2"

ANGLES BOLTED TO GUSSET COMPLETED AND ACCEPTED

DET. 1, 2, 3, 4, 5, 6, 7, 8, 9, 10, 11, 12, 16, M-M & N-N

AT ELEVATION: +1036'- 4 1/2"

ANGLES BOLTED TO GUSSET COMPLETED AND ACCEPTED

DET. 4, 8, 13, 14, 15, M-M & N-N

DIAGONAL & COLUMN BRACE

FRAMED ELEVATIONS:

BET. ELEVATION: +1028'- 4 1/2" & ELEVATION: +1036'- 4 1/2"

MOST ANGLES BOLTS PRETENSIONED AND ACCEPTED [OTHERS WELDED TO GUSSET]

DET. 17, 18, 19, 20, 21, 22, 23, 24, 25, 28, 29, 30 & H-H

NYC BUILDINGS

DESIGNATION OF SAFETY COORDINATOR

Council District / Work Platform ONE: _____ CD#: 3705

Address/ Street#: WTC - Tower 4 Block: _____ Lot: _____

Owner or Contractor

I have been apprised of the requirements to provide flag persons to stop pedestrian traffic when lifting over the sidewalk and to stop vehicular traffic when lifting over the roadway. I am also aware that closing of sidewalk or roadway or temporary relocation of some roadway requirement approval from the Department of Transportation. I/W Mr. Joseph Miloscia, representing the owner or contractor, have been designated as safety coordinator to ensure that these safety precautions are adhered to.

Name: Larry Davis Tel. No: (212) 599-1603

Address: 110 East 42nd Street, Suite 1704, New York, NY 10017

Signature of Owner or Contractor: _____ Date: Dec-07-2011

Safety Coordinator

I, Joseph Miloscia (NAME) am a P.E., R.A. or a person having atleast 5 years of construction experience.

I hereby certify that I will act as the designated Safety Coordinator and shall be responsible for the control of pedestrian and vehicular traffic within the designated hoisting areas. I will also supervise compliance with the Crane Notice Application and the drawings which form part of the On-Site Hoisting Device Application.

Name: Joseph Miloscia Tel. No: (212) 599-1603

Address: 110 East 42nd Street, Suite 1704, New York, NY 10017

Signature of Safety Coordinator: _____ Date: 12/07/11

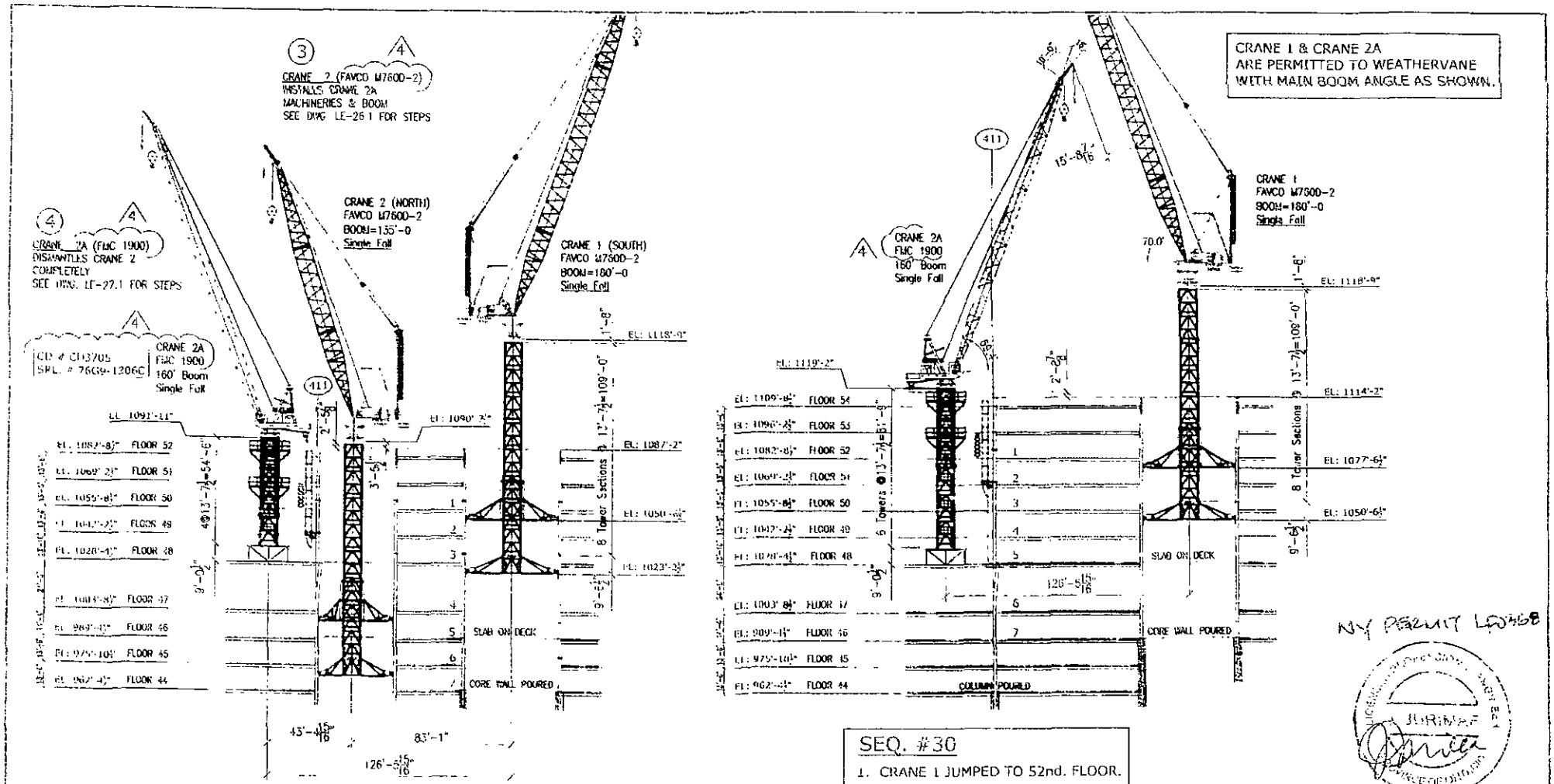

SEQ. #29

1. CRANE 1 JUMPED TO 50th. FLOOR.
2. CRANE 2 STAYS AT 47th. FLOOR
3. CRANE 2 INSTALLS CRANE 2A MACHINERIES & BOOM (SEE DWG. LE-26.1 FOR STEPS)
4. CRANE 2A DISMANTLES CRANE 2 COMPLETELY (SEE DWG. LE-27.1 FOR STEPS)
5. CRANE 1 ERECTS FLOORS 51 & 52.

SEQ. #30

1. CRANE 1 JUMPED TO 52nd. FLOOR.
2. 2 MORE TOWER SECTIONS ADDED TO CRANE 2A.
3. CRANE 1 & CRANE 2A ERECT FLOORS 53 & 54

NY PERMIT L03468

NOV 19, 2011

ERECT FLOORS 51, 52, 53, 54

WORK THIS DWG. WITH DWG. LP-37, LE-25.3

REV	DATE	DESCRIPTION
4	Oct. 17/2011	CRANE 2A CORRECTED TO SHOW FMC 1900
3	Oct. 5/2011	REFERENCE DWG. SHOWN FOR STEP 3 & STEP 4
2	Oct. 4/2011	DWG. COMPLETELY REVISED PER DISCUSSION
1	Sep. 19/2011	CRANE 2A NUMBER OF TOWER SECTIONS REVISED
0	Sep. 15/2011	FOR APPROVAL

DCM Erectors, Inc.

DCM ERECTORS INC.

STRUCTURAL STEEL & MISCELLANEOUS METALS

PROJECT	WORLD TRADE CENTER TOWER 4
SITE	150 Greenwich Street, New York, N.Y.
OWNER	TISHMAN CONSTRUCTION CORP.
TITLE	LOGISTIC ELEVATION FOR CRANE #1 & CRANE #2A
CONTRACT No.	843
DRAWN	Sun, Sep 18/2011
CHECKED	
SCALE	
DRAWING No.	LE-25.2 4

4WTC TC # 2A (NORTH)
CD # 3705
JUMP # 1 (SEQ #30 ON DRG LE2
DATE OF JUMP: 02/09/12

This form is to be used immediately before you proceed with the jump. One final check

PG 01/0

PRE-JUMP CHECK LIST

			Responsibility of
Visual check of all hydraulics	Levels		CJP
	Hose Connection	Leaks	✓
	Hose condition	Cracks/Leaks	✓
Crane Bay	Clear	Safety Nets	✓
		Air hoses	✓
		Torch Hoses	✓
		Deck Projection	✓
		Other Projections	✓
Tower Crane	Not hoisting		✓
	Weathervane	Boom down wind	✓
	Balanced	One CWT off	✓
		One CWT on hook	✓
Fall protection	Platform	Perimeter cables	✓
	Structure (crane bay)	Perimeter cables	✓
Tie Downs or Yokes	Bolts	Loosened but not removed	✓
Dogs	Lifting Ring	Unlocked position	✓
	Upper basket	Unlocked position	✓
All workers positioned	2 in Lifting ring		✓
	2 in upper basket		✓
	2 in lower basket		✓

02/09/12

This check list should be used 3 to 4 days prior to the jump.

PG 02/02

VISUAL INSPECTION – PREPARING FOR JUMP

			Good	Repair/Replace
Pony Motor	Fuel Tank	Proper level	✓	
		Leaks	✓	
	Engine	Operating Condition	✓	
	Oil	Proper Level	✓	
Hydraulic Tank		ProperLevel	✓	
		Leaks	✓	
Hydraulic Hoses		Leaks	✓	
		Cracks	✓	
		Kinks	✓	
		Fitting/Clips	✓	
Hydraulic Cylinder	Main	Leaks		
		Bends/Kinks	✓	
	Outriggers	Leaks	✓	
		Bends/Kinks	✓	
Hand Rails	Lifting Ring	Bent	✓	
		Complete	✓	
	Upper basket	Bent	✓	
		Complete	✓	
	Lower Basket	Bent	✓	
		Complete	✓	
Work Platform	Lift Ring	Grating	✓	
	Upper Platform	Grating	✓	
	Lower Basket	Grating	✓	

02/04/12

Buildings

NYC .gov always open

CLICK HERE TO SIGN UP FOR BUILDINGS NEWS

NYC Department of Buildings

License Details

HOISTING MACHINE OPERATOR A

FREDERIC S BARTZ

Date Issued: 02/21/2003 **License #:** 009538
Status: A - ACTIVE **Expiration:** 10/31/2014
City Employee: No
Office Address: ,
Business Phone:

Business 1 :

If you have any questions please review these Frequently Asked Questions, the Glossary, or call the 311 Citizen Service Center by dialing 311 or (212) NEW YORK outside of New York City.

NYC Buildings

NYC .gov always open

CLICK HERE TO SIGN UP FOR BUILDINGS NEWS

NYC Department of Buildings

License Details

TOWER CRANE RIGGER

EDWARD MEAHAN

Date Issued: 10/05/2011 **License #:** 000029
Status: A - ACTIVE **Expiration:** 09/30/2014
City Employee: No
Office Address: 110 EAST 42ND STREET STE 1704 NEW YORK, NY 10017
Business Phone: 212-599-1603

Business 1 : DCM ERECTORS INC

Insurance Type	Policy	Required	Company	Expiration Date
General Liability	EPC000589205	Yes	ARCH INSURANCE COMPANY	05/01/2012
Workers' Compensation	G 1420 777-3	Yes	NYSIF	05/01/2013
Disability	5349826-001	Yes	ZURICH AMERICAN COMPANY	09/01/2012

If you have any questions please review these Frequently Asked Questions, the Glossary, or call the 311 Citizen Service Center by dialing 311 or (212) NEW YORK outside of New York City.

Buildings

NYC .gov always open

CLICK HERE TO SIGN UP FOR BUILDINGS NEWS

NYC Department of Buildings

License Details

TOWER CRANE RIGGER

ARNOLD VAN HEES

Date Issued: 05/16/1984 **License #:** 000010
Status: A - ACTIVE **Expiration:** 05/31/2012
City Employee: No
Office Address: 110 EAST 42ND STREET,STE 1704 NEW YORK, NY 10017
Business Phone: 212-599-1601

Business 1 : DCM ERECTORS, INC

If you have any questions please review these Frequently Asked Questions, the Glossary, or call the 311 Citizen Service Center by dialing 311 or (212) NEW YORK outside of New York City.

THIS CERTIFIES THAT

Ralph Jensen

Has successfully completed the N.Y.C. D.O.B. recognized **Tower Crane Safety Course**

Joint Apprentice Committee
Ironworkers Local 40 & 361
35-23 236th Street
Astoria, NY 11106

Instructor

Issued: 2/28/09
Expires: 2/28/12

THIS CERTIFIES THAT

Ralph Jensen

HAS SUCCESSFULLY COMPLETED
THE IRONWORKERS
OSHA **10** HOUR CONSTRUCTION
WORKER STANDARDIZED SAFETY
AND HEALTH TRAINING COURSE
DATE **11/15/08**

Joseph J. Hunt
General President

Ex-1

CERTIFICATE ISSUED BY NYC FIRE DEPT

CERT # 83681700 N
ISSUED 05/21/2008 EXPIRES 05/21/2011

NAME JOHN K LONG
HOME
ADDR

NOT
FDNY
EMPLOYEE

FEE $ 25 CAT. G44 TYPE Fitness
DESC. STORE/SALE/USE OF LPG

EMPLOYER LOCAL #40
WORK
LOCATION

THIS CERTIFIES THAT
John Long Jr.
Has successfully completed the N.Y.C. D.O.B. recognized **Tower Crane Safety Course**

Joint Apprentice Committee
Ironworkers Local 40 & 361
35-23 236th Street
Astoria, NY 11106

Instructor

Issued: 2/28/09
Expires: 2/28/12

THIS CERTIFIES THAT
John K. Long Jr.
HAS SUCCESSFULLY COMPLETED
THE IRONWORKERS
OSHA 10 HOUR CONSTRUCTION
WORKER STANDARDIZED SAFETY
AND HEALTH TRAINING COURSE
DATE 6/27/09

Joseph J. DeLuca
General President

THIS CERTIFIES THAT
John Long Jr.
Has successfully completed the
N.Y.C. D.O.B. recognized
Scaffold User Safety Training Course

Joint Apprentice Committee
Ironworkers Locals 40 & 361
35-23 36th Street
Astoria, NY 11106

Instructor

Issued: 6/27/09
Expires: 6/27/13

THIS IS NOT A RIGGERS LICENSE

THIS CERTIFIES T
John Long Jr.
078-56-3190
SUCCESSFULLY COMPLETED
REQUIREMENTS SET
OSHA STANDARDS 1926.75C
SUBPART R STEEL ERECTION
PRESIDENT DATE

THIS CERTIFIES THAT

Jeff Birdsall

Has successfully completed the N.Y.C. D.O.B. recognized **Tower Crane Safety Course**

Joint Apprentice Committee
Ironworkers Local 40 & 361
35-23 236th Street
Astoria, NY 11106

Instructor

Issued: 2/28/09
Expires: 2/28/12

THIS CERTIFIES THAT

JEFFREY BIRDSALL

HAS SUCCESSFULLY COMPLETED THE TRAINING REQUIREMENTS SET FORTH BY OSHA STANDARDS 1926.750 THROUGH .761
SUBPART R, STEEL ERECTION

GENERAL PRESIDENT 5/9/05 DATE L. Manelli INSTRUCTOR

THIS CERTIFIES THAT

Jeff Birdsall

Has successfully completed the N.Y.C. D.O.B. recognized **Scaffold User Safety Training Course**

Joint Apprentice Committee
Ironworkers Locals 40 & 361
35-23 36th Street
Astoria, NY 11106

Instructor

Issued: 6/27/09
Expires: 6/27/13

THIS IS NOT A RIGGERS LICENSE

THIS CERTIFIES THAT

Jeff Birdsall

HAS SUCCESSFULLY COMPLETED THE IRONWORKERS OSHA 10 HOUR CONSTRUCTION WORKER STANDARDIZED SAFETY AND HEALTH TRAINING COURSE

DATE **6/27/09**

Joseph J. Hunt
General President

GARY Holder

THIS CERTIFIES THAT

Gary Holder

HAS SUCCESSFULLY COMPLETED THE TRAINING REQUIREMENTS SET FORTH BY OSHA STANDARDS 1926.750 THROUGH .761
SUBPART R, STEEL ERECTION

GENERAL PRESIDENT — 8/22/07 DATE — INSTRUCTOR

Lead Hazard Training For IRONWORKERS

Name: Gary J Holder
Course: Lead Hazard
Hours: 32
Issues: 2/17/2008
Cert No: 0171-0208-W

29 CFR PART 62
Interim Lead Standard
For Construction

THIS CERTIFIES THAT
Gary Holder
HAS SUCCESSFULLY COMPLETED THE IRONWORKERS OSHA **10** HOUR CONSTRUCTION WORKER STANDARDIZED SAFETY AND HEALTH TRAINING COURSE
DATE **8/23/07**

Joseph J. Hunt
General President

OSHA Occupational Safety and Health Administration — **WK 0015874**

This acknowledges that

Gary Holder Jr.

has successfully completed

Course #:7600 - Disaster Site Worker (16 Hour)

This course emphasizes awareness of the safety and health hazards that may be encountered at natural or man-made disaster sites, as well as the importance of personal protective equipment, decontamination, and incident command procedures.

Trainer — 1/31/09 Completion Date

THIS CERTIFIES THAT

Gary Holder

Has successfully completed the N.Y.C. D.O.B. recognized **Scaffold Safety Training Course**

Joint Apprentice Committee
Ironworkers Local 40 & 361
35-23 236th Street
Astoria, NY 11106

Instructor — Certificate # IWAT 6102
Date: 12/13/08

THIS IS NOT A RIGGERS LICENSE

THIS CERTIFIES THAT

Gary Holder Jr.

Has successfully completed the N.Y.C. D.O.B. recognized Tower Crane Safety Course

Joint Apprentice Committee
Ironworkers Local 40 & 361
35-23 36th Street
Astoria, NY 11106

Instructor — Issued: 2/20/10
Expires: 2/20/13

08430.01.04

HOWARD I. SHAPIRO & ASSOCIATES
CONSULTING ENGINEERS, P.C.
303 Merrick Road, Suite 400
Lynbrook, NY 11563
TEL: 516-791-2600
FAX: 516-791-5426

Passed or Failed
PASS

World Trade Center Tower Crane Inspection Check List

1. Inspection Information

Date of Inspection: 1-20-2012 Project: WTC - Tower 4 Location Crane 2A
Crane EOR: Jack Jurmac Field Contact(s) Eddie Maken
Inspector Name: Chris Legrelle / Dominique Sujk Others Present:
Type ☐ Unassembled ☑ Assembled/Load Test ☐ Periodic ☐ Pre-climb ☐ Post Climb ☐ Special
CD Extension Re-inspection
Inspection Results: ☑ No Deficiencies ☐ Reinspection Required Deficiencies:

2. Crane Data

Make: FMC Model: T61900 Serial No.: 7669-1204C Year:
CD: 3705 Expiration Date: Parts of Line: 2 Boom Length: 160'
Boom: ☑ Luffing ☐ Hammerhead Power: ☐ Electric ☑ Diesel Mast: 54'6"
Climber Type: ☐ Static ☐ Bottom ☑ Top ☐ Hybrid/Other:

3. Crane Owner Information

Crane Owner Name: Contact Name: Mike Schwoon Telephone: 917 797-3441
Address: City: State: Zip:

4. User Information

Company Name: DCM Erectors Contact Name: Eddie Maken Telephone:
Address: 110 E 42nd St, Suite 1704 City: NY State: NY Zip: 10017

5. Rigger Information

Last Name: First Name: MI:
Licence No: Expiration Date: Type: Master Tower Special Master Hanger Special Hanger

6. Crane Safety Coordinator Information

Last Name: First Name: MI:
Licence No: Expiration Date: On Site: Y N

7. Hoist Machine Operator Information

Last Name: Bartz First Name: Frederick MI:
Licence No: 9538 Expiration Date: 10-31-2014 Type: Class A Class B Class C1 Class C2 Class C3

8. General Contractor/Site Safety Manager Information

Company Name: Tishman Contact Name: Telephone:
Address: City: State: Zip:
Licence No: Expiration Date: General Contractor Site Safety Manager

9. ON-SITE DOCUMENTATION

No.	Inspected Item			Status*
9a	Filing Application & Plan Data			
1	Approved Plans on site			S
2	Crane set-up conformity			S
3				

9. ON-SITE DOCUMENTATION - continued

No.	Inspected Item			Status*
9c	General			
4				
5	CD - Approved CD (CD-2)			
6	Plumb & Torque Report (CD-6)			
7	Notice Raising/Lowering (CD-7)			

10. ON SITE INSEPCTION				
No.	Inspected Item			Status*
10a	Pre-Erection Site Data			
1	Foundation Pad			—
2	Structural Base			IS
3	Anchor Bolts			—
4	Rock Anchors			—
5	Subgrade			—
6				
7				
10b	Ties & Supports			
8	Slab Tie-In Reinforcing			
9	Tie-in Slab			
10	Collars			
11	Wedges			
12	Tie-ins	N/A		
13	Tie-In Bolts			
14	Collar/Tie Attachments			
15				
10c	Historical Data			
16				
17				
18				
19				
10d	General			
20				
21				
22				
23				
24				
25				
26				
27				
10e	Operator's Cab & Station			
28				
29				
30				
31				
32				
33				
34				
35				
36				
37				
38				
39				
40				
41				
42				
43				
44				
45				
46				
47				
48				
49				
50				
10f	Load Chart			
51	Per Configuration			
52				
53				
54				
55				
56				

10. ON SITE INSPECTION - CONTINUED				
No.	Inspected Item			Status*
10g	Power Plant - Upper			
57				
58				
59				
60				
61				
10h	Rotating Upper Superstructure			
62	Turntable			S
63	Hydraulic Pump(s)			IS
64	Electrical Wiring			IS
65	Main Hoist - Clutches/Brakes			IS
66	Auxiliary Hoist - Clutches/Brakes			IS
67	Boom Hoist - Clutches/Brakes			IS
68	Counterweight, Frame, Mounting			S
69				
70				
71	Note - hydraulics &			
72	control system was			
73	inspected and tested			
74	by Mike Shiavoni			
75				
76				
77				
78				
79				
80				
81				
82				
83				
84				
85				
86				
87				
88				
89				
90				
10i	Safety Devices/Operational Aids			
91	Boom Angle Indicator			S
92	Boom Hoist Shutoff			S
93	Lower Hoist Limit Device			S
94	Trolley Limit Device			—
95	Main Drum Rotation Indicator			IS
96	Auxiliary Drum Rotation Indicator			IS
97	Load Moment Indicator			S
98	Load Weight Indicator			S
99	Radius Indicator			S
100	Crane Level Indicator			—
101	Anti-Two Block Device			S
102	Two-Block Warning Device			—
103	Wind Velocity Device			S
104	Weathervaning			—
105	Aircraft Strobe Light			S
106				
107				
10j	Boom Support System			
108	Gantry/Mast			S
109	Boom Stops			S
110	Inner Bail			IS
111	Outer Bail			IS
112	Sheaves			IS
113	Boom Hoist Reeving			S
114				

10. ON SITE INSPECTION - CONTINUED				
No.	Inspected Item			Status*
10k	**Lattice Boom**			
115	Boom Section Identification			S
116	Boom Insert Sections			IS
117	Boom Section Alignment			S
118	Spreader Bar			IS
119	Sheaves			IS
120	Hoist Line Dead End			IS
121	Wire Rope Retainer(s)			IS
121	Boom Foot Pins/Keepers			S
122	Boom Head Section			IS
123	Boom Heel Section			S
124	Auxiliary Boom Head			IS
125	Auxiliary Boom Heel			IS
126	Lattice Member			IS
127	Cord Members			IS
128	End Connections/Pins			IS
129				
10l	**Lattice Jib**			
130	Jib Section Identification			
131	Jib Insert Sections			
132	Jib Section Alignment			
133	Positive Stops			
134	Sheave(s)			
135	Wire Rope Retainer(s)			
136	Jib Foot Pins/Keepers			
137	Jib Head Section	N/A		
138	Jib Heel Section			
139	Auxiliary Jib Head			
140	Auxiliary Jib Heel			
141	Lattice Member			
142	Cord Members			
143	End Connections/Pins			
10m	**Trolley**			
144	Frame			
145	Rails			
146	Rollers/Wheels			
147	Brakes	N/A		
148	Sheaves			
149				
10n	**Mast Section**			
151				
152	**Mast Framing Sections**			
152a	Chords:			S
152b	Lattice:			S
152c	Base Plates:			S
152d	Top Plates:			S
152e				
153	**Mast Fastening System**			
153a	Bolts:			S
153b	Washers:			S
153c	Nuts:			S
153d	Pins:			—
153e	Keepers:			—
153f				
154	**Mast Safety Guards**			
154a				
154b				
154c				
154d				
154e				
154f				

10. ON SITE INSPECTION - CONTINUED				
No.	Inspected Item			Status*
10o	**Wire Rope**			
155	**Boom Hoist**			
155a	Size/Construction: 1 1/4" inch			IS
155b	Lubrication			IS
155c	Reeving			IS
155d	Boom Hoist - Wrapping On Drum			S
156	**Main Hoist**			
156a	Size/Construction: 1 5/8" inch			IS
156b	Lubrication			IS
156c	Reeving			IS
156d	Main Hoist - Wrapping On Drum			S
157	**Auxiliary Hoist/Whip Line**			
157a	Size/Construction: 7/8" inch			IS
157b	Lubrication			IS
157c	Reeving			IS
157d	Aux Hoist - Wrapping On Drum			S
158	**Boom Pendants**			
158a	Size/Construction: _____ inch			
158b	Lubrication			
158c	Reeving/End Connections			
158d				
159	**Jib Pendants**			
159a	Size/Construction: _____ inch			
159b	Lubrication			
159c	Reeving/End Connections	N/A		
159d				
10p	**Hooks, Blocks & Balls**			
160	**Main Block & Hook**			
160a	Weight & Capacity Label			S
160b	Sheaves			IS
160c	Safety Latch			S
160d	Wear, Twist & Throat Opening			S
160e	Bearing/Swivel			S
160f	Wedge Socket End Fitting			S
160g	Non-Destructive Test Results			—
160h				
161	**Ball & Hook**			
161a	Weight & Capacity Label			S
161b	Safety Latches			S
161c	Wear, Twist & Throat Opening			S
161d	Swivel			IS
161e	Wedge Socket End Fitting			S
161f	Non-Destructive Test Results			—
161g	Sheaves/Bearings			IS
10q	**Load Test (Attach Protocol & Notes)**			
162	**Moment**			
162a	Parts of Line: _____			
162b	Block Weight _____ lb			
162c	Test Wt.	See attached procedure		
162d	Adjusted Wt.(see notes) _____ lb.			
162e	Radius -Warning 1 ft.			
162f	Radius -Warning 2 ft.			
162g	Radius -Cutout ft.			
162h	Result			
163	**Line Pull**			
163a	1st Test Wt : lb.			
163b	Tailing Wt. lb.			
163c	Combined Wt. lb.	See attached procedure		
163d	1st Test Wt %:			
163e	Combined Wt %: %			
163f	Rated Capacity : _____ lb.			
163g	Result			

11. Equipment Characteristics

Boom I. D. Number	Length	Jib I. D. No.	Length	Mast I. D. No.	Length
Total Length		Total Length		Total Length	

Cords:	Tubular	Angular	Cords:	Tubular	Angular	Cords:	Tubular	Angular
Lacings:	Tubular	Angular	Lacings:	Tubular	Angular	Lacings:	Tubular	Angular

Assembled Notes:

Unassembled Notes:

Status: (S) Satisfactory (U) Deficiencies (IS) Parts Hidden However Functional (-) Not Applicable

12. Summary/Comments

Item Numbers	Deficiencies	Date Corrected
	No Deficiencies found @ time of inspection	
	Passed Load test ~~[illegible]~~ according to procedure.	
	High Boom Cut out @ 22.4' } As per load chart	
	Low Boom Cut out @ 160' }	

13. EOR Comments

14. Inspector's & DOB Witness/Supervisor Endorsement

Name	Signature of Inspector	Date
Christopher Leandro	C. Leandro	1-20-2012
Name	Signature of Crane EOR	Date
[illegible]	Lawrence Rugino (Designee)	1/21/12

NYC BUILDINGS

Crane / Derrick and Work Platform Plumbness And Torque Notification/ Anchor Bolt Pull Out Test

Please file 2 Copies
Application Must Be Typewritten

1/21/12

1. Location of Job

Borough: Manhattan

House No.(s): 150 Street Name: Greenwich

Special Place Name: WTC - Transit Hall - West Tower Crane

2. Crane / Work Platform Information

Manufacturer: FMC Link-Belt Model No.: TG 1900 C.D. No.: 3705 C.N. No.:

✓ Luffing Boom: ☐ Horizontal Boom ☐ Articulating Jib ☐ Other:

Tower Crane: ☐ External Climbing Crane ☐ Internal Climbing Crane Work Platform: ☐ Single Mast ☐ Double Mast

3. Surveyor's Information

Last Name: Conklin First Name: John M.I.:

Business Name: DCM Erectors, Inc Telephone: (212) 599-1603 Fax: (212) 599-1615

Address: 110 East 42nd St., Suite 1704

City: New York State: NY Zip: 10017

This is to Certify that I have measured the out of plumbness for 4 tower sections of the above crane with a tower height of 54 feet 6 inches. The lean towards the following directions indicated below was determined to be: 1/8 inches NORTH (Direction); 1/8 inches EAST (Direction);

Signature Date 1-20-12 Date of Survey 1-20-12

4. Tower / Mast Bracing Anchor Bolt Pull-out Test

Testing Laboratory: Telephone: Fax:

Address:

City: State: Zip:

Person Performing test: Title: Lic. No.: State:

I, the undersigned, am a P.E., R.A., or qualified technican of the above testing laboratory. I have performed / witnessed the anchor bolt pull-out test for bracing support of above hoisting equipment installation. I hereby certify that the anchors safely sustained the test pull without failure.

Location	Elev. / Floor	# Tested / Total # of Anchors	Wall Construction	Attachment Type	Bolt Size	Test Load	Design Load
1		/					
2		/					
3		/					
4		/					
5		/					

Signature Date Date of Survey

5. Supervisor's Statement

Last Name: Vanhees First Name: Arnold M.I.:

Business Name: DCM Erectors, Inc. Telephone: (212) 599-1603 Fax: (212) 599-1615

Address: 110 East 42nd St., Suite 1704

City: New York State: NY ZIP: 10017

This is to certify that the above installed 4 sections were torqued to Turn of the nut method ft. lbs on by Iron workers under my supervision. The manufacturer's recommended bolt-torque value is 4000 ft. lbs. The Manufacturer's allowable out of plumbness is: 1" inches E-W (Direction); 1" inches N-S (Direction);

1/21/12 1/20/2012 1/21/12

Signature of Licensed Rigger Date

CD-6 Rev. 12/03

WORLD TRADE CENTER - TOWER FOUR
NEW YORK, NY

TOWER CRANE INSTALLATIONS

FOR

DCM ERECTORS INC.

DCM PROJECT REF. 843

CRANE 2A
FMC TG1900 S/N 76G9-1206C
NYC CD No. 3705

LOAD TEST PROCEDURE

NY PERMIT LP368

Prepared by: J. Jurimae

LICENSED PROFESSIONAL ENGINEER
J. JURIMAE
PROVINCE OF ONTARIO

Issue R0 - 11/28/11
R1 01/19/12

(7 SHEETS)

CRANE 2A	LOAD TEST WEIGHTS.

TEST #1 - MAX LIFTED LOAD (RADIUS < 80 FT)
(100% FOR ALARM, 110% CUT-OUT)
FMC TG1900 W/ 160 FT + CLIMBING FRAME
SINGLE-PART LINE MAX LIFTED LOAD . 57200#

DEDUCTS: - HOOK BLOCK ~ 1500#
800 FT HOIST. LINE TO GRADE ~ 3700#
5200#

(5200#)

NET MAX LIFTED TIP LOAD ~ 52000#

TEST WEIGHTS: C = 11940#
D = 14080#
F = 25440#
51440# + RIGGING ≈ 52000#
FOR 100% CAPACITY

FOR 110% OF MAX LIFTED LOAD
ADD TEST WEIGHT G1 = 6,800#
TOTAL ≈ 63240# ≈ 1.10 × CAPACITY

TEST #2 - LOAD MOMENT
(100% FOR CUT-OUT)
W/ TEST WEIGHTS : D = 14060#
F = 25440#
39500#

HOOKBLOCK & RIGGING ~ 5200#
TOTAL 44700#

1

CHART CAPACITY @ 110 RADIUS ≈ 44600#
≈ 44700#

1 REVISE LOAD MOMENT TEST TO REFLECT LOAD MOMENT MONITORING SYSTEM CUT-OUT AT 100% OF CAPACITY 01-19-12

PROJECT	CLIENT	
NTC4		BY JJ DATE 11-28-11
		CK DATE
		RV 1 JJ DATE 01-19-12
KAJ ENGINEERS INC.	CONSULTING ENGINEERS TORONTO, CANADA	PROJECT NO. 8794
		PART SHEET 1 OF 1

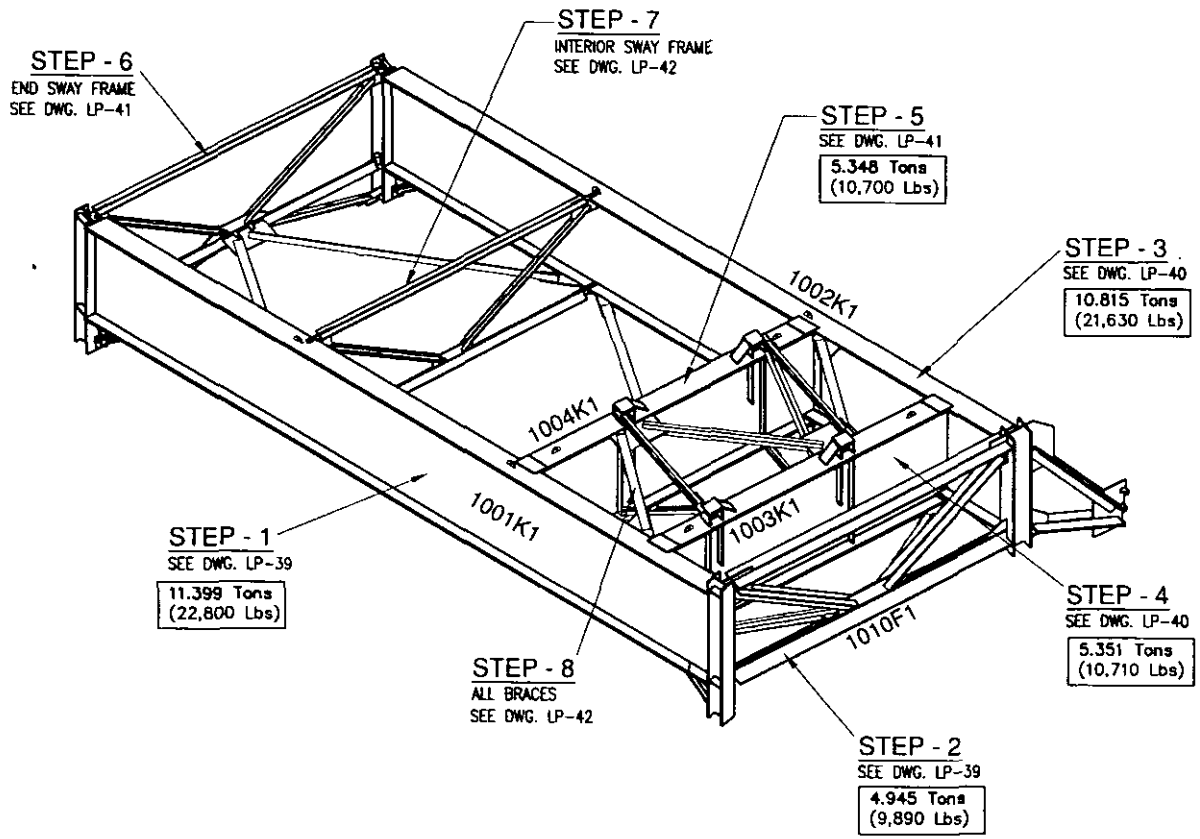

CRANE 2A - DUNNAGE INSTALLATION

WORK THIS DWG. WITH DWGS.
LP-39, LP-40, LP-41, LP-42

REV.	DATE	DESCRIPTION
0	Nov 28/2011	FOR APPROVAL

DCM Erectors, Inc.
DCM ERECTORS INC.
STRUCTURAL STEEL & MISCELLANEOUS METALS
77 Belfield Rd., Suite 100, Etobicoke, Ontario, Canada M9W 1G6, Tel: (416) 241-6867, Fax: (416) 241-3238
110 East 42nd Street, Suite 1704, New York, N.Y. 10017, Tel: (212) 599-1803, Fax: (212) 599-1615

PROJECT:	WORLD TRADE CENTER - TOWER 4
SITE:	150 GREENWICH STREET, NEW YORK, N.Y.
CLIENT:	TISHMAN CONSTRUCTION CORP.
TITLE:	CRANE 2A DUNNAGE INSTALLATION LOGISTIC
CONTRACT No.	843
DRAWN:	Sam Nov 28/2011
CHECKED:	
SCALE:	
BLOCK:	
DRAWING No.	LP-38

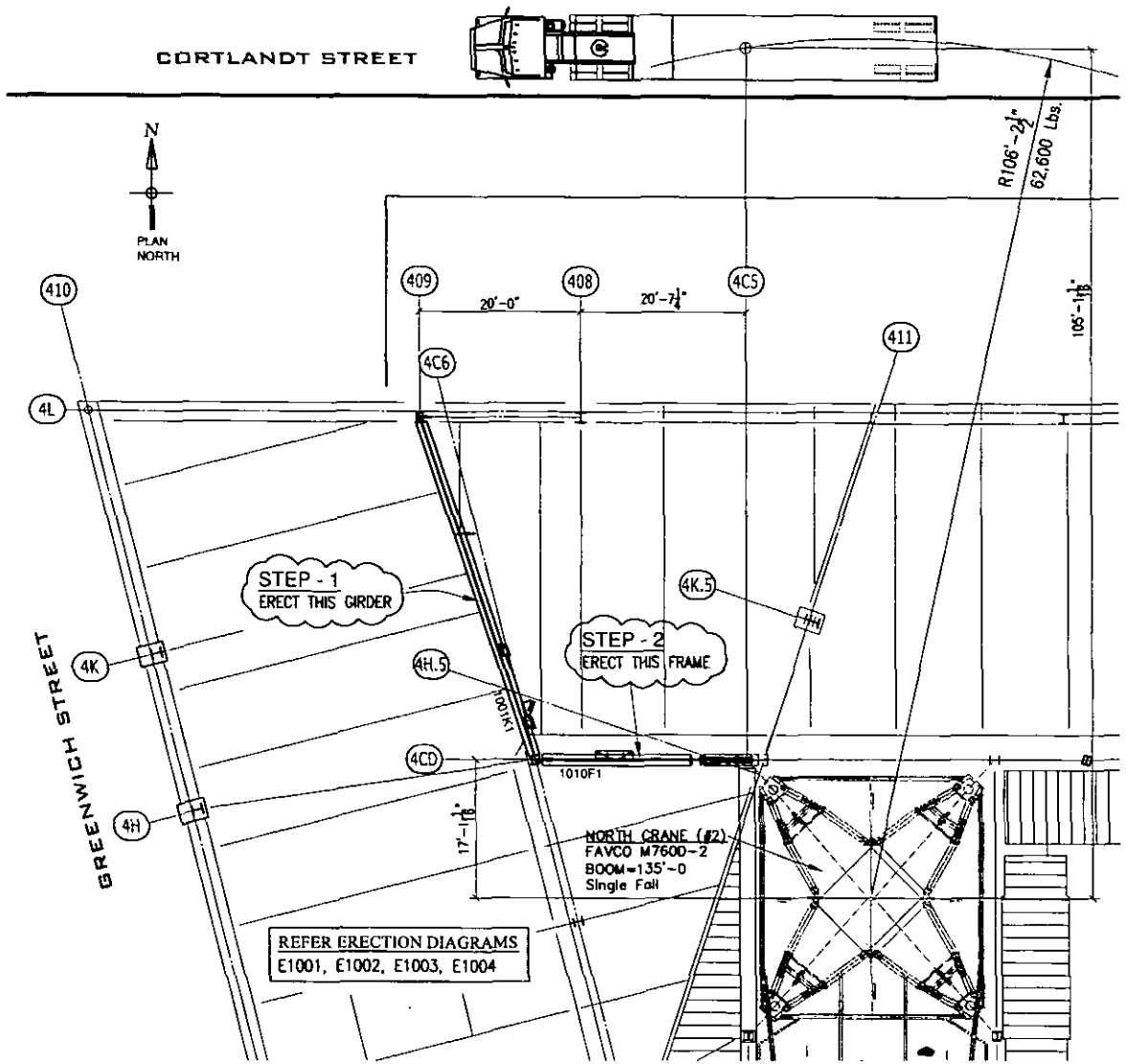

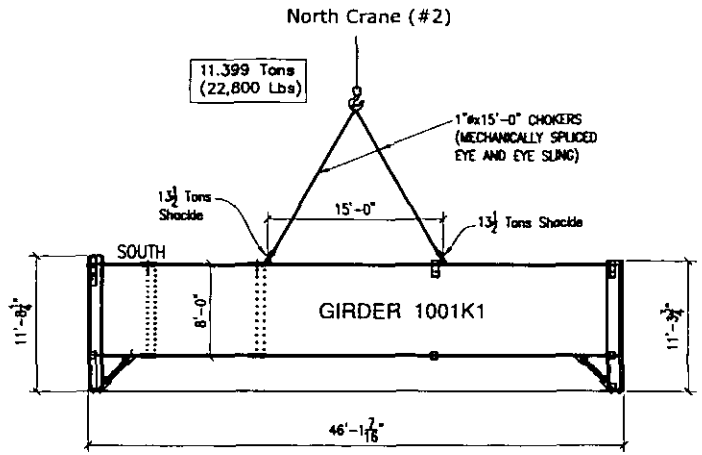

STEP `1'

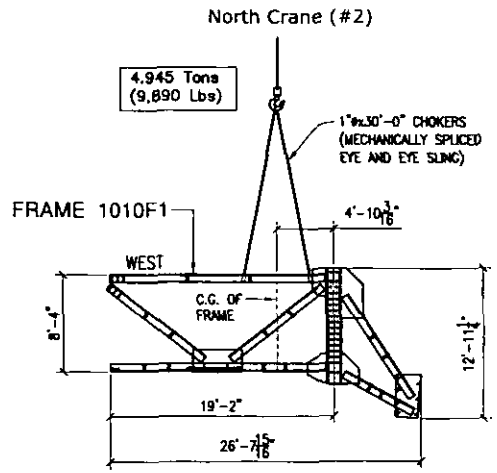

STEP `2'

WORK THIS DWG. WITH DWG. LP-38, LP-40, LP-41, LP-42

CRANE 2A - DUNNAGE INSTALLATION

PLAN AT 48th. FLOOR

REV.	DATE	DESCRIPTION
A	Nov. 28/2011	FOR APPROVAL

DCM Erectors, Inc.

DCM ERECTORS INC.

STRUCTURAL STEEL & MISCELLANEOUS METALS

77 Belfield Rd., Suite 100, Etobicoke, Ontario, Canada M9W 1G6, Tel: (416) 241-0867, Fax: (416) 241-3239

110 East 42nd Street, Suite 1704, New York, N.Y. 10017, Tel: (212) 599-1833, Fax: (212) 599-1815

PROJECT:	WORLD TRADE CENTER - TOWER 4
SITE:	150 GREENWICH STREET, NEW YORK, N.Y.
CLIENT:	TISHIMAN CONSTRUCTION CORP.
TITLE:	CRANE 2A DUNNAGE INSTALLATION LOGISTIC
CONTRACT No.	843
DRAWN:	Sam Nov 28/2011
CHECKED:	
SCALE:	
BLOCK:	
DRAWING No.	LP-39 A

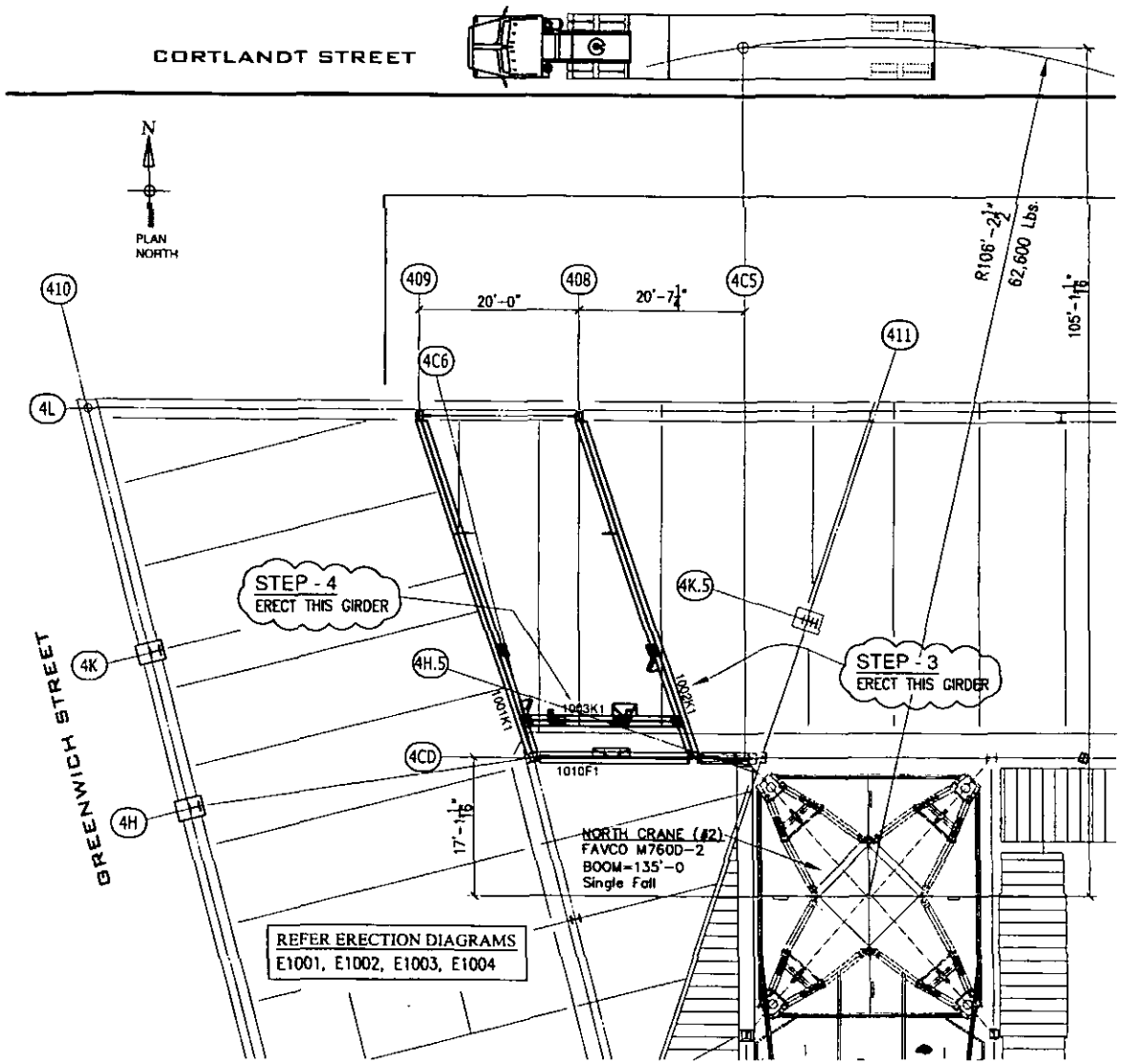

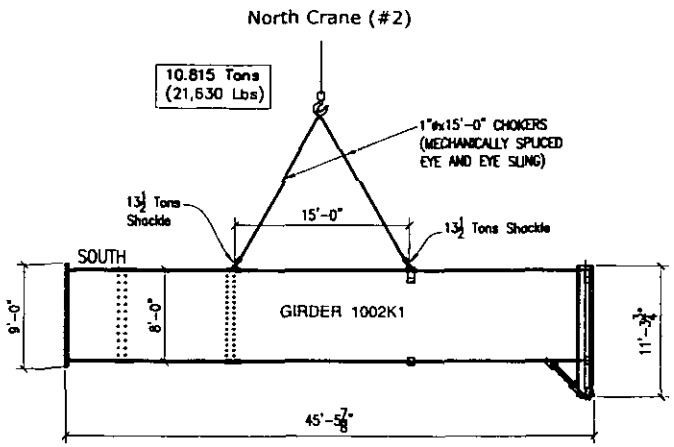

STEP `3'

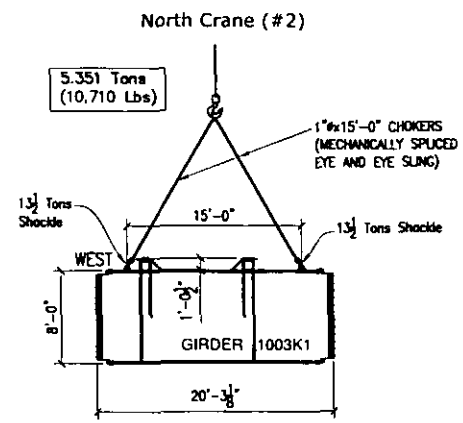

STEP `4'

WORK THIS DWG. WITH DWG. LP-38, LP-39, LP-41, LP-42

CRANE 2A - DUNNAGE INSTALLATION

PLAN AT 48th. FLOOR

REV.	DATE	DESCRIPTION
A	Nov. 28/2011	FOR APPROVAL

DCM Erectors, Inc.

DCM ERECTORS INC.

STRUCTURAL STEEL & MISCELLANEOUS METALS

77 Bellfield Rd., Suite 100, Etobicoke, Ontario, Canada M9W 1G6, Tel: (416) 241-6867, Fax: (416) 241-3239

110 East 42nd Street, Suite 1704, New York, N.Y. 10017, Tel: (212) 599-1803, Fax: (212) 599-1815

PROJECT:	WORLD TRADE CENTER - TOWER 4
SITE:	150 GREENWICH STREET, NEW YORK, N.Y.
CLIENT:	TISHMAN CONSTRUCTION CORP.
TITLE:	CRANE 2A DUNNAGE INSTALLATION LOGISTIC
CONTRACT No.	843
DRAWN:	Sam Nov 28/2011
CHECKED:	
SCALE:	
BLOCK:	
DRAWING No.	LP-40
	A

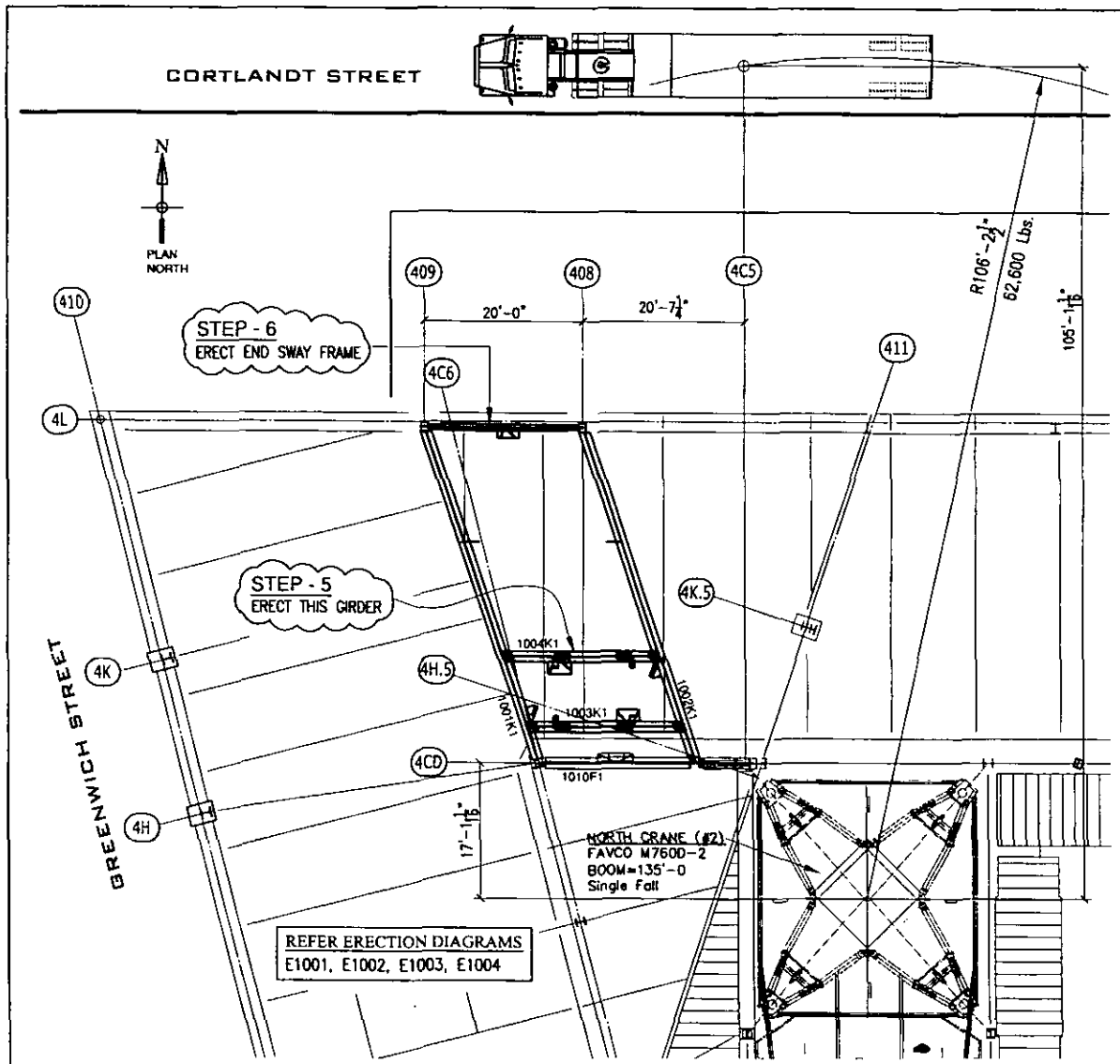

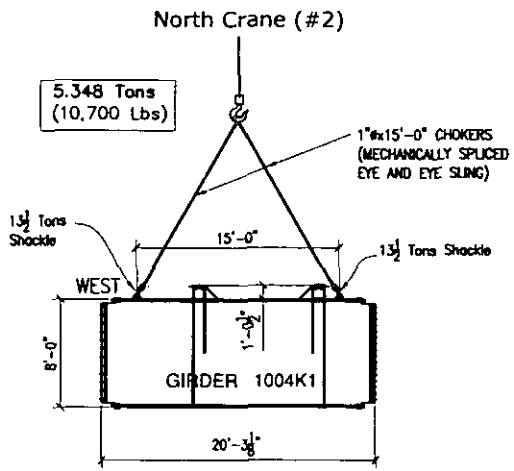

STEP `5'

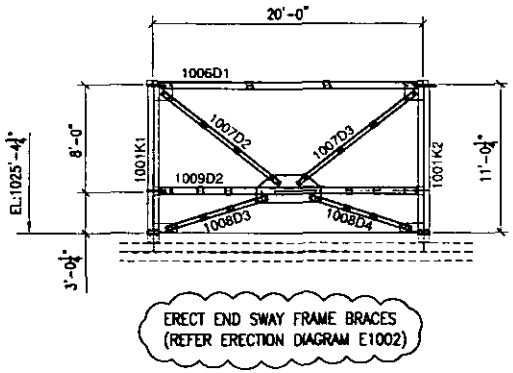

STEP `6'
LOOKING NORTH

CRANE 2A - DUNNAGE INSTALLATION

PLAN AT 48th. FLOOR

WORK THIS DWG. WITH DWG. LP-38, LP-39, LP-40, LP-42

REV.	DATE	DESCRIPTION
A	Nov.28/2011	FOR APPROVAL

DCM Erectors, Inc.

STRUCTURAL STEEL & MISCELLANEOUS METALS

77 Driftfield Rd., Suite 100, Etobicoke, Ontario, Canada M9W 1G6, Tel: (416) 241-6967, Fax: (416) 241-3239

110 East 42nd Street, Suite 1704, New York, N.Y. 10017, Tel: (212) 599-1603, Fax: (212) 599-1615

PROJECT:	WORLD TRADE CENTER - TOWER 4
SITE:	150 GREENWICH STREET, NEW YORK, N.Y.
CLIENT:	TISHMAN CONSTRUCTION CORP.
TITLE:	CRANE 2A DUNNAGE INSTALLATION LOGISTIC
CONTRACT No.	843
DRAWN:	Sam Nov.28/2011
CHECKED:	
SCALE:	
BLOCK:	
DRAWING No.	LP-41

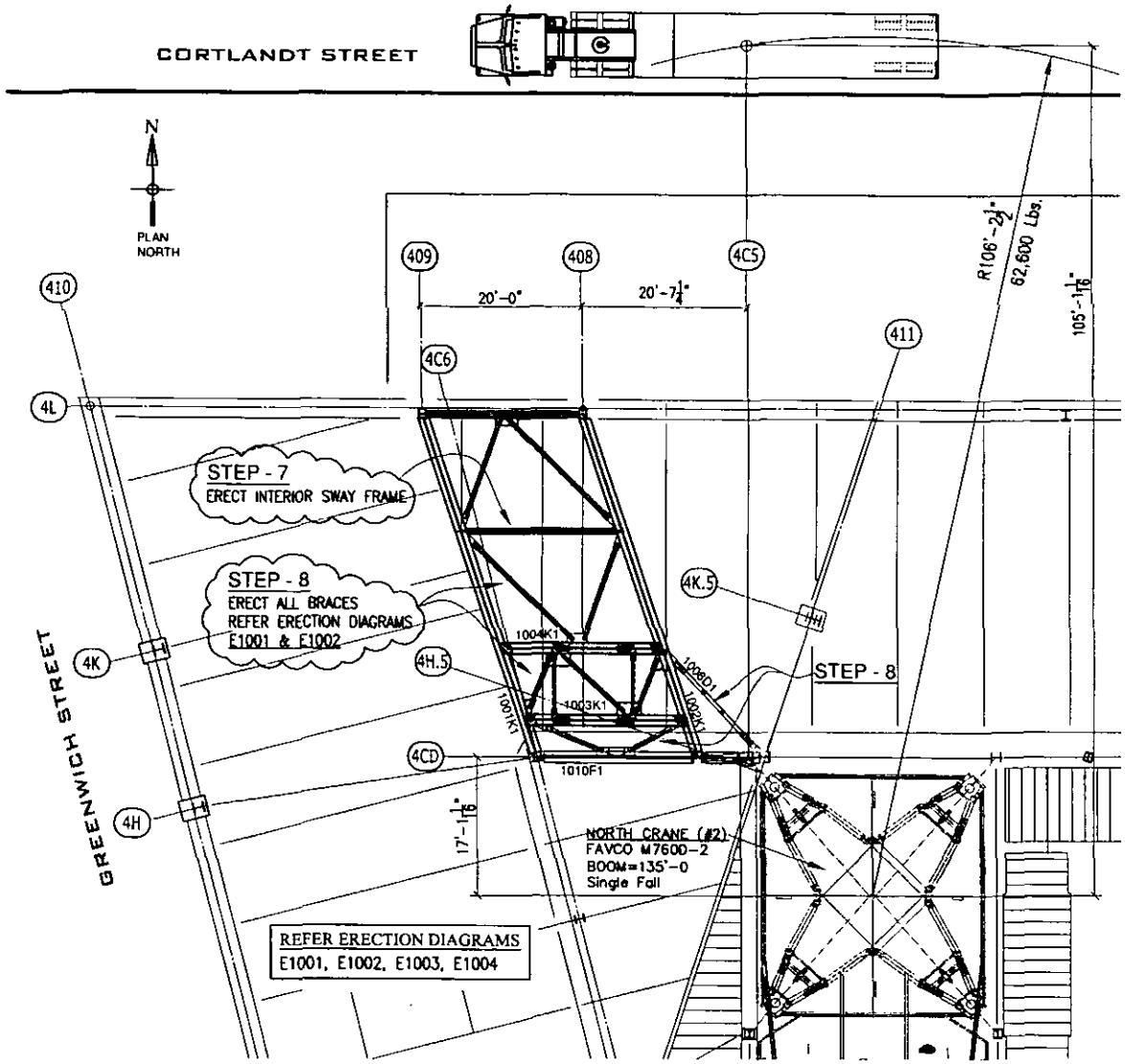

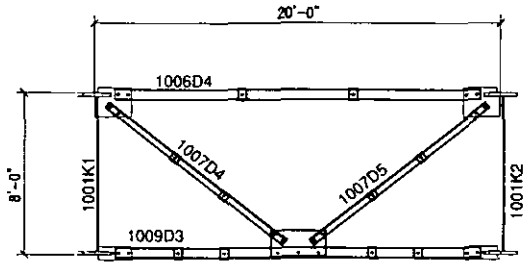

ERECT INTERIOR SWAY FRAME
(REFER ERECTION DIAGRAM E1002)

STEP '7'
LOOKING NORTH

WORK THIS DWG. WITH DWG. LP-38, LP-39, LP-40, LP-41

CRANE 2A - DUNNAGE INSTALLATION

PLAN AT 48th. FLOOR

REV.	DATE	DESCRIPTION
A	Nov.28/2011	FOR APPROVAL

DCM Erectors, Inc.

DCM ERECTORS INC.

STRUCTURAL STEEL & MISCELLANEOUS METALS

77 Belfield Rd., Suite 100, Etobicoke, Ontario, Canada M9W 1G6, Tel: (416) 241-0867, Fax: (416) 241-3230

110 East 42nd Street, Suite 1704, New York, N.Y. 10017, Tel: (212) 599-1803, Fax: (212) 599-1615

PROJECT	WORLD TRADE CENTER - TOWER 4
SITE	150 GREENWICH STREET, NEW YORK, N.Y.
CLIENT	TISHMAN CONSTRUCTION CORP.
TITLE	CRANE 2A DUNNAGE INSTALLATION LOGISTIC
CONTRACT No	843
DRAWN	Sam Nov.28/2011
CHECKED	
SCALE	
BLOCK	
DRAWING No	LP-42

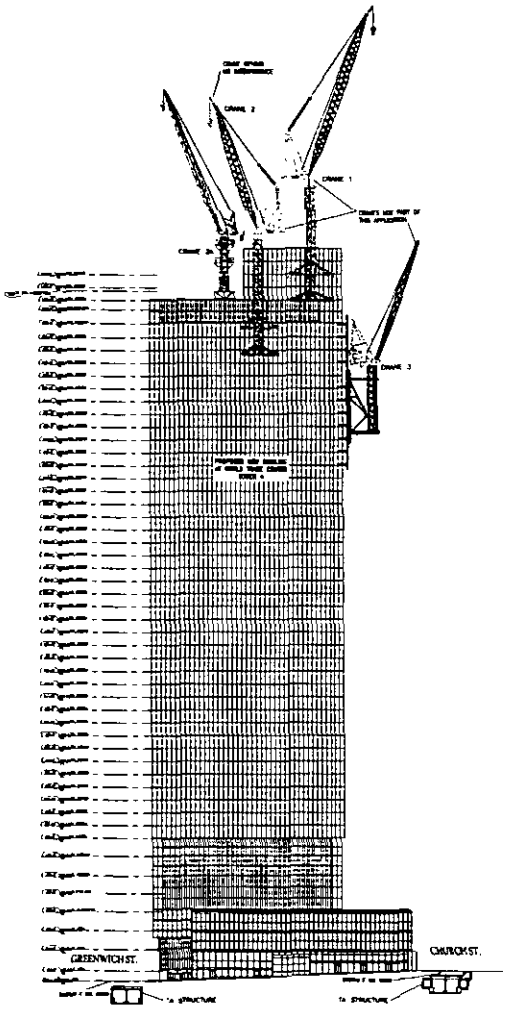

ELEVATION

PROPOSED TOWER CRANE 2A-
INITIAL CONFIGURATION

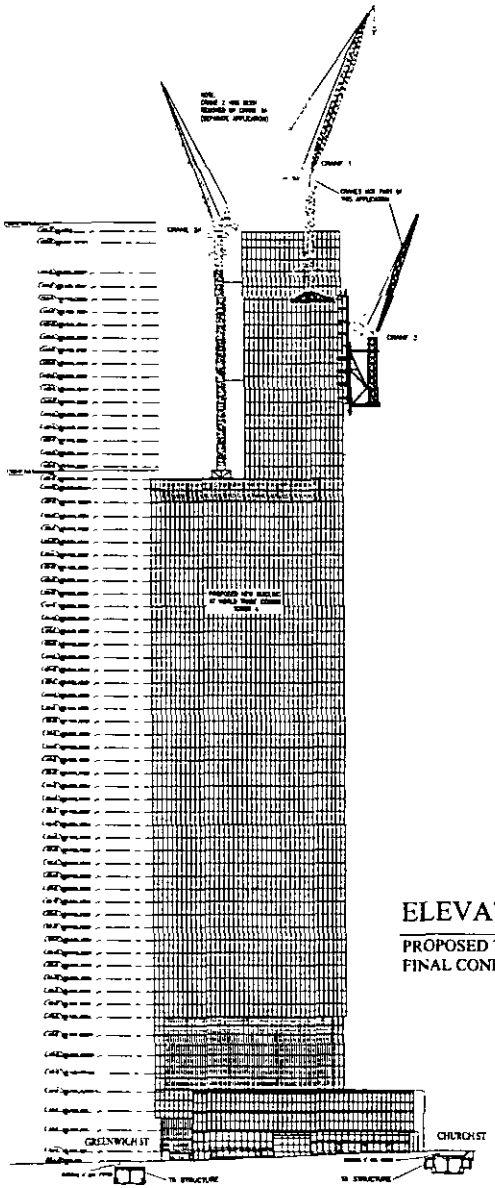

ELEVATION

PROPOSED TOWER CRANE 2A-
FINAL CONFIGURATION

DCM Erectors, Inc.

STRUCTURAL STEEL & MISCELLANEOUS METALS

77 Belfield Rd., Suite 100
Etobicoke, Ontario
Canada M9W 1G8
Tel. (416) 241-5967
Fax. (416) 241-3239

110 East 42nd Street
Suite 1704
New York, N.Y. 10017
Tel: (212) 599-1603
Fax: (212) 599-1615

REV	DATE	DESCRIPTION
A	Nov 28/2011	TA SUBMITTAL HGSASSOC

PROJECT	WORLD TRADE CENTER - TOWER 4
SITE	150 GREENWICH STREET, NEW YORK, N.Y.
CLIENT	TISHMAN CONSTRUCTION CORP
TITLE	LOGISTIC ELEVATION FOR CRANE -TA STRUCTURE APPROVAL
CONTRACT No.	843
DRAWN	JS 11-29-11
CHECKED	M.C. / F.G.
SCALE	1"=60'-0"
BLOCK	
DRAWING No.	TA-EL-01
REV	A

Federated Crane Co., L.L.C.

1640 New Market Avenue, South Plainfield, NJ 07080
Engineering Office:
Phone: (585) 381-1663
Fax: (585) 381-5336
Email: tkanzler@rochester.rr.com

February 1, 2012

New York City Department of Buildings
Cranes and Derricks Division
280 Broadway
New York, NY 10007

Attn: Delia Shumway, PE
Executive Director

Re: Upgrade Winch for FMC and Favco tower cranes
Hydraulic System Test Protocol

Dear Ms. Shumway:

Included below is the test protocol for the subject tower crane upgrade winch system you requested.

If you have any questions, please do not hesitate to call.

Sincerely,

Thomas Kanzler, P.E.
Chief Engineer

cc: M. Schiavoni
L. Shapiro

Federated Crane Upgrade Winch
Hydraulic System Shop/Field Testing Protocol
V1.0 2/1/2012

Charge Pressures

Main Hoist

Engine at speed
Controls switch to "On"
Main/Aux Hoist selector switch to "Main"
Main Hoist Fine Control Switch to "Off"
At HPU - verify charge pressure (at pressure switch) is at or above 400 psi _____
Rotate drum in either direction
At HPU - verify charge pressure (while drum is rotating) is at or above 380 psi _____
Stop drum
Turn gauge isolator valve to relieve charge pressure switch
Verify operator controls are disabled _____
Restore gauge isolator valve to run position
Controls switch to "Off"

Auxiliary Hoist

Engine at speed
Controls switch to "On"
Main/Aux Hoist selector switch to "Aux"
Aux Hoist Fine Control Switch to "Off"
At HPU - verify charge pressure (at pressure switch) is at or above 400 psi _____
Rotate drum in either direction
At HPU - verify charge pressure (while drum is rotating) is at or above 380 psi _____
Stop drum
Turn gauge isolator valve to relieve charge pressure switch
Verify operator controls are disabled _____
Restore gauge isolator valve to run position
Controls switch to "Off"

Boom Hoist

Engine at speed
Controls switch to "On"
At HPU - verify charge pressure (at pressure switch) is at or above 290 psi _____
Rotate drum in either direction
At HPU - verify charge pressure (while drum is rotating) is at or above 280 psi _____
Stop drum
Turn gauge isolator valve to relieve charge pressure switch
Verify operator controls are disabled _____
Restore gauge isolator valve to run position
Operate drum in either direction
Verify boom ratchet pawl retracts and resets when drum is started and stopped _____
Operate drum in opposite direction
Verify boom ratchet pawl retracts and resets when drum is started and stopped _____
Controls switch to "Off"

Slewing

Engine at speed
Controls switch to "On"
At HPU - Verify charge pressure (at pressure switch) is at or above 290 psi _____
Verify swing brake is engaged
Operate swing in either direction only enough to pressurize working circuit (audible pump whine)
At HPU - verify charge pressure is at or above 280 psi _____
Controls switch to "Off"

Operator's Cab Indicators

Engine at speed
Verify green "Charge Pressure" indicator on control enclosure IS lit _____
Verify red "Charge Pressure" indicator on control enclosure is NOT lit _____
Turn gauge isolator valve to relieve charge pressure switch (at any function)
Verify green "Charge Pressure" indicator on control enclosure is NOT lit _____
Verify red "Charge Pressure" indicator on control enclosure IS lit _____
Controls switch to "On"
Verify green indicator on operator's console IS lit _____
Controls switch to "Off"
Verify red indicator on operator's console IS lit _____

Boom Limits

Engine at speed
Boom up to load chart minimum load radius
Verify LMI stops boom up function at chart minimum load radius _____
Override LMI boom minimum load radius cutout
Boom up until boom hoist up limit activates *Do Not Allow Boom to Contact Backstops*
Verify boom hoist up limit functionality _____
Boom down to load chart maximum load radius
Verify LMI stops boom down function at chart maximum load radius _____

Anti-Two Block System

Main Hoist

Engine at speed
Raise main hook slowly to activate anti-two block system
Verify main hoist up is disabled when activated _____

Auxiliary Hoist

Engine at speed
Raise auxiliary hook slowly to activate anti-two block system
Verify auxiliary hoist up is disabled when activated _____
Verify boom hoist down is disabled _____

NYC Buildings

NYC .gov always open

CLICK HERE TO SIGN UP FOR BUILDINGS NEWS

NYC Department of Buildings

Cranes & Derricks CD

Hydraulic

CD NUMBER: 3705 RECORD NO.: 02

MANUFACTURER: LINKBELT/FMC

MODEL: TC 1900 (76) JANUARY 1979

EQUIPMENT TYPE: TOWER CRANE - INT CLIMBING MECHANISM

SERIAL No.: 76G9-1206C

Payment History Certificate of Operation

Current Status: EXPIRED ON 11/19/2011

Filing Information

Filing Status: RENEWAL - APPROVED FOR USE ON 12/13/2011

Filed: 10/03/2011 Registration Expiration Date: 11/19/2011

Invoice Number: 61043336 Fee Paid: $400.00

Applicant

Name: MICHAEL J SCHIAVONI Title: MEMBER

Business Name: FEDERATED CRANE CO LLC

Business Address: 1640 NEW MARKET AVE S. PLAINFIELD NJ 07080

Phone: 917-797-3441 Fax: 732-752-1158

Owner

Name: MICHAEL J SCHIAVONI Title: MEMBER

Business Name: FEDERATED CRANE CO LLC

Business Address: 1640 NEW MARKET AVE S. PLAINFIELD NJ 07080

Phone: 917-797-3441 Fax:

Non US Phone: Country:

Crane / Derrick / Mast Climber Information

Tower Height: 160FT Boom Length: 200FT Jib Length: 70FT Total Combined Length: 430FT

Maximum capacity: 115 TONS

Number of Drums: 3

Cable Size- 1) 1 5/8"
2) 7/8"
3) 1 1/4"
4)

Transmission Type: HYDRAULIC/PNEUMATIC

Power: DIESEL

Overall Carrier- Length:
Width:
Tailswing:

Width with Outriggers Extended:

Tower/Mast Property- Depth: 9' 9"
Width: 9' 9"
Height: 13' 7"

Counterweight Configuration- 1) 23,600 LB
2) 70,800 LB
3)
Bumper: N/A

If you have any questions please review these Frequently Asked Questions, the Glossary, or call the 311 Citizen Service Center by dialing 311 or (212) NEW YORK outside of New York City.

NYC Buildings

CRANES & DERRICKS

Certificate of Operation

CD Number: 3705 Issued: 06/08/2011 Expires: 01/13/2011

Serial #: 76G9-1206C

Owner Information: FEDERATED CRANE CO LLC
1640 NEW MARKET AVE
S. PLAINFIELD NJ 07080

Equipment Type: TOWER CRANE - INT CLIMBING MECHANISM

Make: LINKBELT/FMC

Model: TG 1900 (76) Year: 1979

Temporary

Emergency Telephone Day or Night: 311

Assistant Commissioner: Michael Alacha

Commissioner of Buildings:

Tampering with or knowingly making a false entry in or falsely altering this permit is a crime that is punishable by a fine, imprisonment or both.

NYC BUILDINGS

Crane / Derrick / Mobile Work Platform Approval and Operation Application / Certificate

Please File 2 Copies
Application Must Be Typewritten

For Internal Use Only	
CD Number	
Date Received	Fee Paid
Invoice No:	

2 CD Number

1. Application Type

	Original		Renewal		Change		
Equipment Type:		Mobile Crane	✓	Fix / Climber Tower Crane		Derrick	Work Platform

3. Applicant

Send correspondence to: ☐ Applicant ☐ Owner

Name: Richard Gilbert
Title: Safety & Operations Manager E-mail richard@dcmerectors.com
Company: Federated Equipment Co., L.L.C.
Address: 110 East 42nd Street, Suite 1704
City: New York State: NY Zip: 10017
Telephone: (212) 599 - 1603 Fax: (212) 599 - 1615

Owner

Name: Larry DavisPresident
Title: President E-mail ld@dcmerectors.com
Company: Federated Equipment Co., L.L.C.
Address: 110 East 42nd Street, Suite 1704
City: New York State: NY Zip: 10017
Telephone: (212) 599 - 1603 Fax: (212) 599 - 1615

4. Crane / Derrick / Work Platform Information

Prototype No.:
Manufacturer: Refer to seperate CD2 for FMC-TG1900 CD3705
Model: Model Year:
Serial Number:

Transmission		Power	
	Hydraulic		Gas
	Mechanical		Diesel
Capacity:			Electric

Drums

Number of Drums:		
No.	Wire Rope Size	
1	in.	
2	in.	
3	in.	
4	in.	

Work Platform Information

Platform Type:

	Single Mast
	Twin Mast
	Free Standing

Platforms I.D.'s:

5. Tower / Boom / Jib Section Information

Maximum Configuration: Tower Crane: Tower: Boom: Jib: Total: **Lift Crane:** Boom: Jib: Total:

	Latticed	Solid	
Tower/Mast Section I.D.			FE-21, FE-35, FE-19, FE-20, FE-34, TGT13-019, TGT13-021, TGT13-023
Boom Section I.D.			Refer to seperate CD2 for FMC-TG1900 CD3705
Jib / Sill / Leg Section I.D.			

6. Equipment Dimension

Overall Carrier		Tower / Mast Property		Derrick Information			
Length ft	Width ft	Tower/Mast Depth	ft	Type			
Width With Outriggers Extended	ft	Tower/Mast Width	ft		Chicago Boom		Guy Derrick
Tailswing	ft	Tower/Mast Height	ft		Gin Pole		Stiffleg Derrick

7. Statement and Signatures

- The Owner certifies that he will comply with the requirements of § 15.0 of Reference Standards RS 19-2 of the Building Code regarding "Inspection Required by Owner for Cranes & Derricks."
- Falsification of any statement is a misdemeanor under § 26-124 of the Administrative Code and is punishable by a fine or imprisonment, or both.
- Falsification of any statement is a misdemeanor under § 26-124 of the Administrative Code and is punishable by a fine or imprisonment, or both.

Applicant's Signature	Date	Owner's Signature	Date
	November 29, 2011		November 29, 2011

For Internal Use Only	TCAO Issued For:
	☐ This Site Only
	Expiration Date

Issued by: Date	Approved by Cranes & Derricks Authorized Signature	Date

MAGNETIC PARTICLE INSPECTION REPORT

CLIENT DCM Erectors Inc. 110 East 42nd Street New York, NY 10017	**LOCATION** South Plainfield, NJ	**INSPECTION DATE** 10/20/11 & 10/24/11	
	CAN JOB NO. J12M1002	**REPORT NO.** 12M1102	
	CLIENT ORDER NO.	**SHEET** 1	**OF** 1

COMPONENT/DESCRIPTION/DRAWING NO.
Tower Sections – See Below

MATERIAL Carbon Steel		**SURFACE CONDITION** Clean / Painted
PROCEDURE/WORK INSTRUCTION/TECHNIQUE MPI IP0019		**ACCEPTANCE STANDARD**
EQUIPMENT Magna Flux Y-7 AC/DC 111	**POWER/CURRENT** 115V-60Hz	**MATERIAL THICKNESS**
METHOD MPI	**MEDIUM** Circle Systems Dusting Powder 63 RED 16223	**BACKGROUND** Black

RESULTS

The magnetic particle inspection was completed using a Magna Flux Y-7 yoke and dry particle technique. Every weld on the following list of Tower Sections was inspected 100% from two planes to insure full coverage.

No relevant indications were found during the inspection.

COMPONENTS	LENGTH
FE-21	13'–7½" X 9'-9" X 9'-9"
FE-35	13'–7½" X 9'-9" X 9'-9"
FE-19	13'–7½" X 9'-9" X 9'-9"
FE-20	13'–7½" X 9'-9" X 9'-9"
FE-34	13'–7½" X 9'-9" X 9'-9"
TGT13-019	13'–7½" X 9'-9" X 9'-9"
TGT13-021	13'–7½" X 9'-9" X 9'-9"
TGT13-023	13'–7½" X 9'-9" X 9'-9"

This report relates exclusively to the work ordered and/or the item(s) inspected. It shall not be reproduced except in full without the approval of the inspection body and the client.

CAN INSPECTOR	ISSUING AUTHORITY	CLIENT
SIGN	**SIGN**	**SIGN**
NAME Brian Harvey	**NAME**	**NAME** Richard Gilbert
QUALS ASNT TC1A MT LII	**DATE**	**DATE** October 26, 2011

CAN

Federated Crane Co., L.L.C.
1640 New Market Avenue South Plainfield NJ 07080
Phone: (917) 797 –3441
Fax: (908) 941-5142

January 30, 2012

Port Authority of NY & NJ
115 Broadway
8th Floor
New York, New York 10006

Attn; Ms Maureen Lynch- Jacobs

Re; CD-3705 Hoist cable

Maureen,
In reference to the hoist cable on the above mentioned machine currently at the WTC Tower Four project. This cable was visually inspected at our shop in December 2011 and found to be within tolerance as per OSHA's regulation 1926.1412

Thanks,

Michael Schiavoni
Operations Manager
Federated Crane Co. LLC

Federated Crane Co., L.L.C.
1640 New Market Avenue South Plainfield NJ 07080
Phone: (917) 797 –3441
Fax: (908) 941-5142

January 30, 2012

Port Authority of NY & NJ
115 Broadway
8th Floor
New York, New York 10006

Attn; Ms Maureen Lynch- Jacobs

Re; CD-3705 Hydraulic System Testing

Maureen,
In reference to the safety valves, Load moments system and limit switches on the TG-1900, CD-3705 the hydraulic system testing protocol were all checked and found to be in compliance to the manufactures specifications . Please see attached report.

Thanks,

Michael Schiavoni
Operations Manager
Federated Crane Co. LLC

CHARGE PRESSURES

CHARGE PRESSURES	MINIMUM	ACTUAL	STATUS
MAIN PUMP	200	280	OK
COOLING SHUTTLE	160	180	OK
MA VALVE DISABLES			OK
BOOM PUMP	200	250	OK
COOLING SHUTTLE	160	200	OK
MA VALVES DISABLES			OK
AUXILIARY PUMP	200	210	OK
COOLING SHUTTLE	160	180	OK
MA VALVE DISABLES			OK
SWING PUMP	200	220	OK
COOLING SHUTTLE	160	180	OK

OPERATOR'S CAB CHARGE PRESSURE INDICATORS

NO CHARGE PRESSURE RED LIGHT IS ON	OK
GOOD CHARGE PRESSURE GREEN LIGHT IS ON	OK
DISABLE MAIN CHARGE PRESSURE RED LIGHT IS ON	OK
DISABLE BOOM CHARGE PRESSURE RED LIGHT IS ON	OK
DISABLE AUX CHARGE PRESSURE RED LIGHT IS ON	OK

MOTORS CASE FLOWS

MAIN HOIST WITH 40,000# ON HOOK LOW SPEED

	MAX GPM's	ACTUAL	STATUS
MOTOR #1 TOP	2.5 GPM	1.9 GPM	OK
MOTOR #2	2.5 GPM	1.7 GPM	OK
MOTOR #3	2.5 GPM	1.7 GPM	OK
MOTOR #4 BOTTOM	2.5 GPM	2 GPM	OK

AUXILIARY HOIST WITH 10,000# ON HOOK LOW SPEED

	MAX GPM's	ACTUAL	STATUS
AUX MOTOR	3.0 GPM	1.7 GPM	OK

BOOM HOIST 160' BOOM MAX RADUIS EMPTY HOOK

	MAX GPM's	ACTUAL	STATUS
BOOM MOTOR	0.4 GBM's	0.2 GPM	OK

INTERMEDIATE / HIGH SPEED LOCKOUT MAIN LOAD

MAIN HOIST	STATUS
HIGH SPEED MAX. 14,000 #	OK
MEDUIM SPEED MAX. 36,000#	OK

AUXILLIARY HOIST LOW/HIGH SPEED LOCKOUT

	STATUS
HIGH SPEED MAX. 1500 PSI.	OK

BOOM LIMITS

	STATUS
MAX BOOM 160'	OK
MIN. BOOM 20'	OK
MIN BOOM PNEUMATIC 87 DEGREES	OK

ANTI-TWO BLOCK SYSTEMS

	STATUS
MAIN LOAD	OK
AUXILIARY LOAD	OK

STROH ENGINEERING SERVICES, P.C.
41 Robert Street, Babylon, NY 11702, U.S.A.
Phone: 631-669-7531 Fax: 631-669-6369
E-mail: *info@stroengineering.com*

January 5, 2012

Mr. Wallace Caban, P.E.
Assistant Chief Engineer-Construction
Engineering Department
The Port Authority of NY & NJ
115 Broadway, 8th Floor
New York, NY 10006

Re: Third Party Engineering Review of FMC Link-Belt TG1900 Tower Crane 2A Installation
WTC Tower Four, New York, NY
(Tower Four – Tower Crane No. 2A – CD# 3705)

Dear Mr. Caban:

Ms. Maureen Lynch-Jacobs, Crane Safety Coordinator for the PANYNJ, requested that I review the design of the Crane 2A tower crane installation for Tower Four. I reviewed the tower crane installation design submittal, provided by KAJ Engineers Inc. and DCM Erectors Inc. and I find the design to be to the acceptable standard of care for this type of installation.

The submittals I reviewed included the design and erection of the base frame for Crane 2A, the removal of Crane 2 and proof of the building supports for the crane loads. The submittal did not include the design of the ties and the tie connections to the building for Crane 2A.

Please contact me with any questions or comments. Thank you.

Very truly yours,

Peter J. Stroh, P.E.
President
Stroh Engineering Services, P.C.

STATE OF NEW YORK
PETER JAMES STROH
No. 072184
LICENSED PROFESSIONAL ENGINEER

DCM ERECTORS INC.

110 East 42nd Street Suite 1710
New York, NY 10017
United States of America

Phone: (212) 599 – 1603
Fax: (212) 599 – 1615

Date: JAN 20 2012

Foreman: JOHN LONG

Project Name: WTC – Tower 4

CRANE # 2
BOOM REMOVAL

Project Location: WTC, New York

TOPICS

DOUBLE LANYARDS
EYE PROTECTION
TIE OFF
SAFE WORK AREA

COMMENTS FROM WORKERS

NAME *(Please Print)*	SIGNATURE
Gary Holder	
John Lowa	
Ed Tesen	
ARNOLD VAN HEES	
EDDIE MEAHAN	
Alex Deikus	
JEFF BIRDSALL	
Sam Lam	
Joe Milosciq	
COLIN MC PARTLAND	

Meeting Held by: *(Signature)*

EDDIE MEAHAN
(Print Name)

Send copy to: Main Office, and General Contractor

Tishman Construction Corporation of New York

WTC – Tower 4

Meeting Sign-In Sheet

Date: 1/12/2012

Subject: DCM TOWER CRANE 2A ASSEMBLY

Name	Company	E-Mail Address
EVERDI HILI	TCC	EHILI@TISHMANNYC.COM
MIKE CASTAGNOLI	TCC	MCASTAGNOLI@TISHMAN.COM
ANDREW Biello	TCC	ABiello@TISHMAN.COM
EDDIE MEAHAN	DCM	
Richard Gilbert	DCM	Richard@DCMTRIFECTORS.com
A VAN HEES	DCM	
Michael Feminella	DCM	
Marvin Jacobs	PA	JACOBS@PANYNJ.GOV
Ken Klemens	L14/TCC	KKlemmens@Tishman.com
Whitney Knudsen	TCC	RKNUDSEN@TISHMAN.COM
FRANK CASALE	DOB	FCASALE@BUILDINGS.NYC.GOV
Jaime Condren	Charter	Jaime.Condren@Charterlaw.com
Joseph Miloscia	Select Safety (DCM)	JOEMiloma1@aol.com
Joseph Hiller	DOB	JHiller@Buildings.NYC.GOV
Carl Curatola	TCC	CCuratola@Tishman.com
Mike Yang	PA REO	MYang@panyni.gov
TYLER TROAST	TCC	TTROAST@TISHMAN
Dominique Singh	Howard T. Shapiro	DSingh@HISAssoc.com

08430.01.04

HOWARD I. SHAPIRO & ASSOCIATES
CONSULTING ENGINEERS, P.C.
303 Merrick Road, Suite 400
Lynbrook, NY 11563
TEL.: 516-791-2600
FAX: 516-791-5426

Passed or Failed: PASS

World Trade Center Tower Crane Inspection Check List

1. Inspection Information

Date of Inspection: 1-20-2012 Project: WTC - Tower 4 Location: Crane 2A

Crane EOR: Jack Jurmac Field Contact(s): Eddie Meehan

Inspector Name: Chris Legaba / Dominique Sujo Others Present:

Type ☐ Unassembled ☑ Assembled/Load Test ☐ Periodic ☐ Pre-climb ☐ Post Climb ☐ Special

CD Extension Re-inspection

Inspection Results: ☑ No Deficiencies ☐ Reinspection Required Deficiencies:

2. Crane Data

Make: FMC Model: TC1900 Serial No.: 76G9-1204C Year:

CD: 3705 Expiration Date: Parts of Line: 2 Boom Length: 160'

Boom: ☑ Luffing ☐ Hammerhead Power: ☐ Electric ☑ Diesel Mast: 54'6"

Climber Type: ☐ Static ☐ Bottom ☑ Top ☐ Hybrid/Other:

3. Crane Owner Information

Crane Owner Name: Contact Name: Mike Schlewont Telephone: 917 497-3441

Address: City: State: Zip:

4. User Information

Company Name: DCM Erectors Contact Name: Eddie Meehan Telephone:

Address: 110 E 42nd St, Suite 1704 City: NY State: NY Zip: 10017

5. Rigger Information

Last Name: First Name: MI:

Licence No: Expiration Date: Type: Master Tower Special Master Hanger Special Hanger

6. Crane Safety Coordinator Information

Last Name: First Name: MI:

Licence No: Expiration Date: On Site: Y N

7. Hoist Machine Operator Information

Last Name: Bartz First Name: Frederic MI:

Licence No: 9539 Expiration Date: 10-31-2014 Type: Class A Class B Class C1 Class C2 Class C3

8. General Contractor/Site Safety Manager Information

Company Name: Tishman Contact Name: Telephone:

Address: City: State: Zip:

Licence No: Expiration Date: General Contractor Site Safety Manager

9. ON-SITE DOCUMENTATION

No.	Inspected Item			Status*
9a	Filing Application & Plan Data			
1	Approved Plans on site			S
2	Crane set-up conformity			S
3				

9. ON-SITE DOCUMENTATION - continued

No.	Inspected Item			Status*
9c	General			
4				
5	CD - Approved CD (CD-2)			
6	Plumb & Torque Report (CD-6)			
7	Notice Raising/Lowering (CD-7)			

10. ON SITE INSPECTION				
No.	Inspected Item			Status*
10a	Pre-Erection Site Data			
1	Foundation Pad			—
2	Structural Base			IS
3	Anchor Bolts			—
4	Rock Anchors			—
5	Subgrade			—
6				
7				
10b	Ties & Supports			
8	Slab Tie-in Reinforcing			
9	Tie-in Slab			
10	Collars			
11	Wedges			
12	Tie-ins	N/A		
13	Tie-in Bolts			
14	Collar/Tie Attachments			
15				
10c	Historical Data			
16				
17				
18				
19				
10d	General			
20				
21				
22				
23				
24				
25				
26				
27				
10e	Operator's Cab & Station			
28				
29				
30				
31				
32				
33				
34				
35				
36				
37				
38				
39				
40				
41				
42				
43				
44				
45				
46				
47				
48				
49				
50				
10f	Load Chart			
51	Per Configuration			
52				
53				
54				
55				
56				

10. ON SITE INSPECTION - CONTINUED				
No.	Inspected Item			Status*
10g	Power Plant - Upper			
57				
58				
58				
60				
61				
10h	Rotating Upper Superstructure			
62	Turntable			S
63	Hydraulic Pump(s)			IS
64	Electrical Wiring			IS
65	Main Hoist - Clutches/Brakes			IS
66	Auxiliary Hoist - Clutches/Brakes			IS
67	Boom Hoist - Clutches/Brakes			IS
68	Counterweight, Frame, Mounting			S
69				
70				
71	Note – hydraulics &			
72	control system were			
73	inspected and tested			
74	by Mike Shiavoni			
75				
76				
77				
78				
79				
80				
81				
82				
83				
84				
85				
86				
87				
88				
89				
90				
10i	Safety Devices/Operational Aids			
91	Boom Angle Indicator			S
92	Boom Hoist Shutoff			S
93	Lower Hoist Limit Device			S
94	Trolley Limit Device			—
95	Main Drum Rotation Indicator			IS
96	Auxiliary Drum Rotation Indicator			IS
97	Load Moment Indicator			S
98	Load Weight Indicator			S
99	Radius Indicator			S
100	Crane Level Indicator			—
101	Anti-Two Block Device			S
102	Two-Block Warning Device			—
103	Wind Velocity Device			S
104	Weathervaning			—
105	Aircraft Strobe Light			S
106				
107				
10j	Boom Support System			
108	Gantry/Mast			S
109	Boom Stops			S
110	Inner Bail			IS
111	Outer Bail			IS
112	Sheaves			IS
113	Boom Hoist Reeving			S
114				

10. ON SITE INSPECTION - CONTINUED				
No.	Inspected Item			Status*
10k	Lattice Boom			
115	Boom Section Identification			S
116	Boom Insert Sections			DS
117	Boom Section Alignment			S
118	Spreader Bar			DS
119	Sheaves			DS
120	Hoist Line Dead End			DS
121	Wire Rope Retainer(s)			DS
121	Boom Foot Pins/Keepers			S
122	Boom Head Section			DS
123	Boom Heel Section			S
124	Auxiliary Boom Head			DS
125	Auxiliary Boom Heel			DS
126	Lattice Member			DS
127	Cord Members			DS
128	End Connections/Pins			DS
129				
10l	Lattice Jib			
130	Jib Section Identification			
131	Jib Insert Sections			
132	Jib Section Alignment			
133	Positive Stops			
134	Sheave(s)			
135	Wire Rope Retainer(s)			
136	Jib Foot Pins/Keepers			
137	Jib Head Section	N/A		
138	Jib Heel Section			
139	Auxiliary Jib Head			
140	Auxiliary Jib Heel			
141	Lattice Member			
142	Cord Members			
143	End Connections/Pins			
10m	Trolley			
144	Frame			
145	Rails			
146	Rollers/Wheels			
147	Brakes	N/A		
148	Sheaves			
149				
10n	Mast Section			
151				
152	Mast Framing Sections			
152a	Chords:			S
152b	Lattice:			S
152c	Base Plates:			S
152d	Top Plates:			S
152e				
153	Mast Fastening System			
153a	Bolts:			S
153b	Washers:			S
153c	Nuts:			S
153d	Pins:			—
153e	Keepers:			—
153f				
154	Mast Safety Guards			
154a				
154b				
154c				
154d				
154e				
154f				

10. ON SITE INSPECTION - CONTINUED				
No.	Inspected Item			Status*
10o	Wire Rope			
155	Boom Hoist			
155a	Size/Construction: 1 1/4" inch			DS
155b	Lubrication			DS
155c	Reeving			DS
155d	Boom Hoist - Wrapping On Drum			S
156	Main Hoist			
156a	Size/Construction: 1 5/8" inch			DS
156b	Lubrication			DS
156c	Reeving			DS
156d	Main Hoist - Wrapping On Drum			S
157	Auxiliary Hoist/Whip Line			
157a	Size/Construction: 7/8" inch			DS
157b	Lubrication			DS
157c	Reeving			DS
157d	Aux Hoist - Wrapping On Drum			S
158	Boom Pendants			
158a	Size/Construction: _____ inch			
158b	Lubrication			
158c	Reeving/End Connections			
158d				
159	Jib Pendants			
159a	Size/Construction: _____ inch			
159b	Lubrication			
159c	Reeving/End Connections	N/A		
159d				
10p	Hooks, Blocks & Balls			
160	Main Block & Hook			
160a	Weight & Capacity Label			S
160b	Sheaves			DS
160c	Safety Latch			S
160d	Wear, Twist & Throat Opening			S
160e	Bearing/Swivel			S
160f	Wedge Socket End Fitting			S
160g	Non-Destructive Test Results			—
160h				
161	Ball & Hook			
161a	Weight & Capacity Label			S
161b	Safety Latches			S
161c	Wear, Twist & Throat Opening			S
161d	Swivel			DS
161e	Wedge Socket End Fitting			S
161f	Non-Destructive Test Results			—
161g	Sheaves/Bearings			DS
10q	Load Test (Attach Protocol & Notes)			
162	Moment			
162a	Parts of Line: _____			
162b	Block Weight _____ lb			
162c	Test Wt.	See attached procedure		
162d	Adjusted Wt.(see notes) _____ lb.			
162e	Radius -Warning 1 ft.			
162f	Radius -Warning 2 ft.			
162g	Radius -Cutout ft.			
162h	Result			
163	Line Pull			
163a	1st Test Wt : lb.			
163b	Tailing Wt. lb.			
163c	Combined Wt. lb.	See attached procedure		
163d	1st Test Wt %:			
163e	Combined Wt %: %			
163f	Rated Capacity : _____ lb.			
163g	Result			

11. Equipment Characteristics

Boom I. D. Number	Length	Jib I. D. No.	Length	Mast I. D. No.	Length
Total Length		Total Length		Total Length	
Cords: Tubular	Angular	Cords: Tubular	Angular	Cords: Tubular	Angular
Lacings: Tubular	Angular	Lacings: Tubular	Angular	Lacings: Tubular	Angular

Assembled Notes:

Unassembled Notes:

Status: (S) Satisfactory (U) Deficiencies (IS) Parts Hidden However Functional (-) Not Applicable

12. Summary/Comments

Item Numbers	Deficiencies	Date Corrected

No Deficiencies found @ time of inspection

Passed Load test ~~test~~ according to procedure.

High Boom Cut out @ 22.4' } As per Load Chart
Low Boom Cut out @ 160' }

13. EOR Comments

14. Inspector's & DOB Witness/Supervisor Endorsement

Name	Signature of Inspector	Date
Christopher Leandro	C Leandro	1-23-2012
Name	Signature of Crane EOR	Date
	Lawrence Scuprio (Designee)	1/21/12

NYC BUILDINGS

Crane / Derrick and Work Platform Plumbness And Torque Notification/ Anchor Bolt Pull Out Test

Please file 2 Copies
Application Must Be Typewritten

1/21/12

1. Location of Job

Borough: Manhattan

House No.(s): 150 Street Name: Greenwich

Special Place Name: WTC - Transit Hall - West Tower Crane

2. Crane / Work Platform Information

Manufacturer: FMC Link-Belt Model No.: TG 1800 C.D. No.: 3705 C.N. No.:

✓ Luffing Boom: ☐ Horizontal Boom ☐ Articulating Jib ☐ Other:

Tower Crane: ☐ External Climbing Crane ☐ Internal Climbing Crane Work Platform: ☐ Single Mast ☐ Double Mast

3. Surveyor's Information

Last Name: Conklin First Name: John M.I.:

Business Name: DCM Erectors, Inc Telephone: (212) 599-1603 Fax: (212) 599-1615

Address: 110 East 42nd St., Suite 1704

City: New York State: NY Zip: 10017

This is to Certify that I have measured the out of plumbness for 4 tower sections of the above crane with a tower height of 54 feet 6 inches. The lean towards the following directions indicated below was determined to be: 1/8 inches NORTH (Direction); 1/8 inches EAST (Direction);

Signature [signature] Date 1-20-12 Date of Survey 1-20-12

4. Tower / Mast Bracing Anchor Bolt Pull-out Test

Testing Laboratory: Telephone: Fax:

Address:

City: State: Zip:

Person Performing test: Title: Lic. No.: State:

I, the undersigned, am a P.E., R.A., or qualified technican of the above testing laboratory. I have performed / witnessed the anchor bolt pull-out test for bracing support of above hoisting equipment installation. I hereby certify that the anchors safely sustained the test pull without failure.

Location	Elev. / Floor	# Tested / Total # of Anchors	Wall Construction	Attachment Type	Bolt Size	Test Load	Design Load
1		/					
2		/					
3		/					
4		/					
5		/					

Signature Date Date of Survey

5. Supervisor's Statement

Last Name: Vanhees First Name: Arnold M.I.:

Business Name: DCM Erectors, Inc. Telephone: (212) 599-1603 Fax: (212) 599-1615

Address: 110 East 42nd St., Suite 1704

City: New York State: NY ZIP: 10017

This is to certify that the above installed 4 sections were torqued to Turn of the nut method ft. lbs on by Iron workers under my supervision. The manufacturer's recommended bolt-torque value is 4000 ft. lbs. The Manufacturer's allowable out of plumbness is: 1" inches E-W (Direction); 1" inches N-S (Direction);

[signature] 1/21/12 1/20/2012 1/21/12

Signature of Licensed Rigger Date

CD-8 Rev. 12/03

CD 3705
2A T4

WORLD TRADE CENTER - TOWER FOUR
NEW YORK, NY

TOWER CRANE INSTALLATIONS

FOR

DCM ERECTORS INC.

DCM PROJECT REF. 843

CRANE 2A
FMC TG1900 S/N 76G9-1206C
NYC CD No. 3705

LOAD TEST PROCEDURE

NY PERMIT LP368

Prepared by: J. Jurimae

LICENSED PROFESSIONAL ENGINEER
J. JURIMAE
PROVINCE OF ONTARIO

Issue R0 - 11/28/11
R1 01/19/12

(7 SHEETS)

THE STATE EDUCATION DEPARTMENT / THE UNIVERSITY OF THE STATE OF NEW YORK / ALBANY, NY 12234

State Board for Engineering and Land Surveying, Education Building, 89 Washington Avenue, 2nd Floor Mezzanine-East Wing
Tel. (518) 474-3817, Ext. 140
Fax (518) 473-6282
E-mail: enginbd@mail.nysed.gov
E-mail: lsurvbd@mail.nysed.gov

LIMITED PERMIT TO PRACTICE PROFESSIONAL ENGINEERING

This permit shall entitle the holder to practice Professional Engineering in New York but only in connection with the specific project listed below:

Permit Number: 000368 - RENEWAL	**Issued To:** **Jaak Jurimae**
Permit Issue Date: October 8, 2011	
Expiration Date: October 7, 2014	

This is to certify that

JAAK JURIMAE

having applied for a limited permit to practice professional engineering in the State of New York and having submitted satisfactory evidence of established and recognized professional standing in the **Province of Ontario and holds license number 22696017**, and the State Board for Professional Engineering having recommended the issuance of such limited permit; therefore, in accordance with the provisions of Section 7207, subdivision 1, of the Education Law, the said **Jaak Jurimae** is hereby granted this limited permit to practice professional engineering in this state but only in connection with a specific project, viz., **Tower Four – World Trade Center, New York, New York** and is authorized to file plans, specifications, and reports using his **Province of Ontario seal**, as provided in Section 7209 of the Education Law. A copy of this permit shall accompany all documents filed with building officials or others in conjunction with this project.

Jane W. Blair, PE
Executive Secretary

Non-transferable
Valid only for project listed above

Professional Engineers must register triennially with the department to practice the profession in New York State. Limited permit holders whose projects may take longer to complete than the three-year registration period must renew their NYS registration to practice the profession in New York State.

CRANE 2A	LOAD TEST WEIGHTS.

TEST #1 - MAX LIFTED LOAD (RADIUS < 80 FT)
(100% FOR ALARM, 110% CUT-OUT)
FMC TG1900 W/ 160 FT + CLIMBING FRONTE
SINGLE-PART LINE MAX LIFTED LOAD . 57200#

DEDUCTS: - HOOK BLOCK ~ 1500#
800 FT HOIST. LINE TO GRADE ~ 3700#
5200# (5200#)

NET MAX LIFTED TIP LOAD. ~ 52000#

TEST WEIGHTS: C = 11940#
D = 14060#
F = 25440#
51440# + RIGGING ≈ 52000#
FOR 100% CAPACITY

FOR 110% OF MAX LIFTED LOAD
ADD TEST WEIGHT G = 6,680#
TOTAL ≈ 63240# ≈ 1.10 x CAPACITY

TEST #2 - LOAD MOMENT
(100% FOR CUT-OUT)
W/ TEST WEIGHTS : D = 14060#
F = 25440#
39500#
HOOKBLOCK & RIGGING ~ 5200#
TOTAL 44700#

1

CHART CAPACITY @ 110 RADIUS ≈ 44600#
≈ 44700#

1. REVISE LOAD MOMENT TEST TO REFLECT LOAD MOMENT MONITORING SYSTEM CUT-OUT AT 100% OF CAPACITY 01-19-12

PROJECT	CLIENT	
NTC4		BY JJ DATE 11-28-11
		CK DATE
		RV 1 JJ DATE 01-19-12
KAJ ENGINEERS INC.	CONSULTING ENGINEERS TORONTO, CANADA	PROJECT NO. 8794
		PART SHEET 1 OF 1

FMC

General Specifications

Link-Belt® 115-ton *(104.31 metric ton)* Tower/gantry crane

TG-1900

Equipment Sales & Service (1964) Limited
1030 Martin Grove Road Rexdale, Ontario M9W 4W3
(416) 249-8141 Telex 06-989373

BRANCHES: Ottawa • Sudbury • Calgary • Edmonton
Sparwood, B.C.

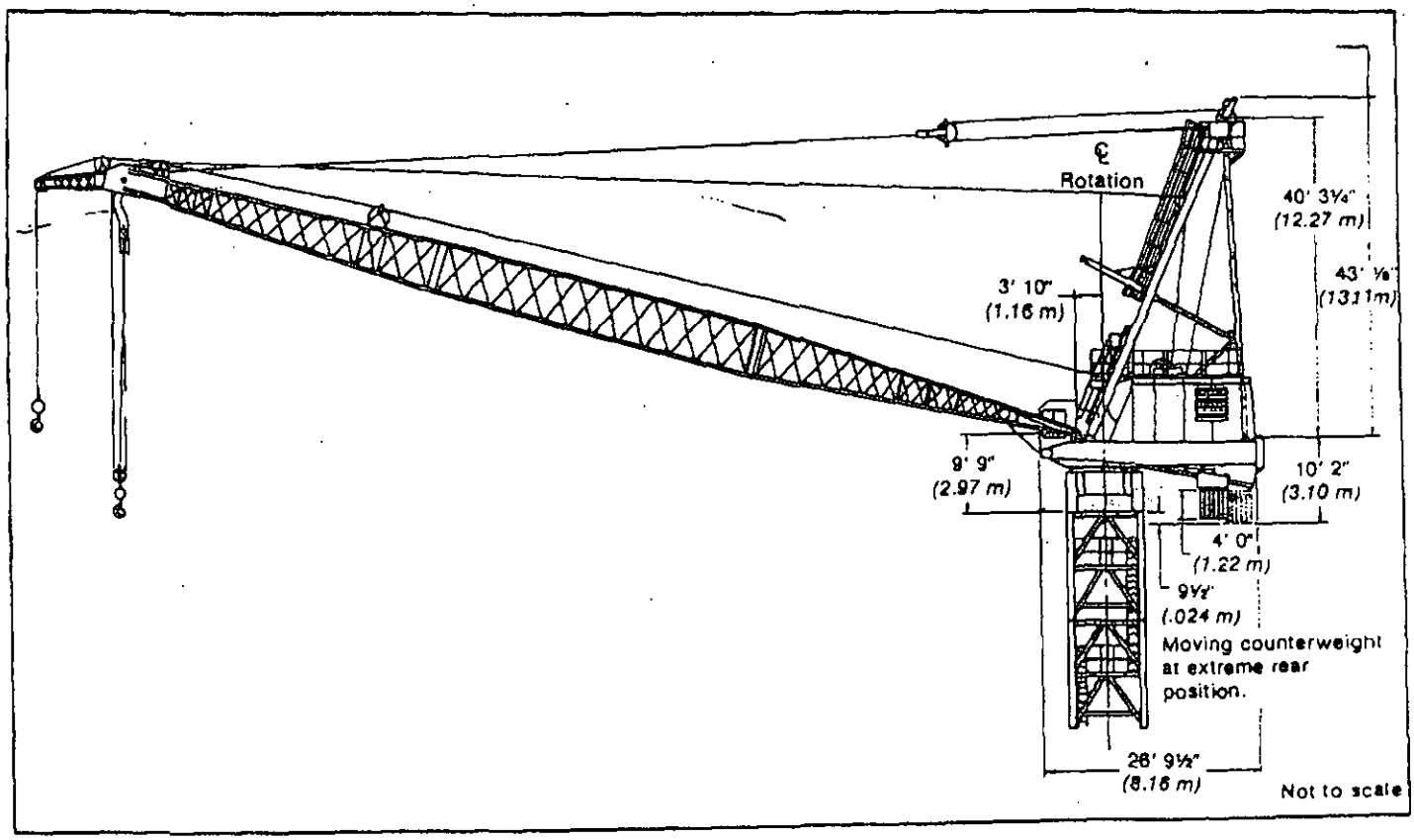

General dimensions	Feet	*meters*
Basic boom length	80' 0"	*24.38*
Maximum boom length	200' 0"	*60.96*
Length, optional boom tip extension	10' 0"	*3.05*
Tailswing	20' 10"	*9.15*
Over-all width, revolving upperstructure	13' 4"	*4.06*

TG-1900 lifting crane capacities — with climbing frame

Refer to Notes page 15.

Boom				Load radius②		Capacities — Main boom only①							
	Angle	Boom point height③				4-part hoist line		3-part hoist line		2-part hoist line		1-part hoist line	
Length	Degree	Feet	meters	Feet	meters	Pounds	kilograms	Pounds	kilograms	Pounds	kilograms	Pounds	kilograms
160' (48.77 m)	84.2	168' 11"	51.48	20	6.10					114,400	51 890		
	82.4	168' 4"	51.30	25	7.62							57,200	25 945
	80.6	167' 7"	51.07	30	9.14								
	78.8	166' 8"	50.79	35	10.67	154,500	70 080	155,200	70 397				
	76.9	165' 7"	50.47	40	12.19	135,400	61 416	136,100	61 733	114,400	51 880		
	73.2	162' 11"	49.65	50	15.24	107,600	48 806	108,300	49 124	109,000	49 441		
	69.4	159' 6"	48.62	60	18.29	88,300	40 052	89,000	40 369	89,700	40 687		
	65.6	155' 5"	47.38	70	21.34	74,200	33 656	74,900	33 974	75,600	34 291		
	61.6	150' 5"	45.84	80	24.38	63,800	28 803	64,100	29 075	64,800	29 392	57,200	25 945
	57.4	144' 6"	44.05	90	27.43	55,000	24 947	55,700	25 265	56,300	25 537	57,000	25 854
	53.0	137' 7"	41.93	100	30.48	48,300	21 908	48,900	22 180	49,500	22 452	50,200	22 770
	48.4	129' 5"	39.44	110	33.53	42,800	19 413	43,400	19 685	44,000	19 958	44,600	20 230
	43.4	119' 8"	36.48	120	36.58	38,300	17 372	38,800	17 599	39,400	17 871	39,900	18 098
	37.9	108' 1"	32.94	130	39.62	34,600	15 694	35,100	15 921	35,500	16 102	36,000	16 329
	31.6	93' 6"	28.56	140	42.67	30,900	14 016	31,400	14 242	31,800	14 424	32,200	14 606
	24.0	74' 9"	22.77	150	45.72	27,900	12 655	28,200	12 791	28,500	12 927	28,900	13 108
	12.5	44' 4"	13.52	160	48.77	22,300	10 115	22,600	10 251	22,900	10 387	23,700	10 750
170'⑤ (51.82 m)	84.5	178' 11"	54.54	20	6.10					114,300	51 845		
	82.8	178' 5"	54.37	25	7.62							57,100	25 900
	81.1	177' 8"	54.16	30	9.14								
	79.4	176' 10"	53.90	35	10.67	152,400	69 127	153,300	69 535				
	77.7	175' 10"	53.59	40	12.19	133,600	60 554	134,300	60 917	114,300	51 845		
	74.2	173' 4"	52.83	50	15.24	105,800	47 990	106,600	48 352	107,400	48 715		
	70.7	170' 2"	51.87	60	18.29	88,700	39 326	87,500	39 689	88,200	40 006		
	67.1	166' 4"	50.68	70	21.34	72,700	32 976	73,400	33 293	74,200	33 656		
	63.4	161' 8"	49.28	80	24.38	62,000	28 122	62,700	28 440	63,400	28 757	57,100	25 900
	59.5	156' 3"	47.62	90	27.43	53,600	24 312	54,300	24 630	55,000	24 947	55,700	25 265
	55.5	149' 11"	45.68	100	30.48	46,900	21 273	47,600	21 591	48,200	21 863	48,900	22 180
	51.3	142' 6"	43.42	110	33.53	41,400	18 778	42,000	19 050	42,700	19 368	43,300	19 640
	46.9	133' 10"	40.78	120	36.58	36,900	16 737	37,500	17 009	38,100	17 281	38,700	17 554
	42.1	123' 7"	37.68	130	39.62	33,100	15 013	33,700	15 286	34,200	15 512	34,800	15 785
	36.8	111' 8"	33.97	140	42.67	29,700	13 471	30,200	13 698	30,700	13 925	31,200	14 152
	30.7	95' 6"	29.40	150	45.72	26,600	12 065	27,000	12 246	27,400	12 428	27,800	12 609
	23.2	76' 10"	23.41	160	48.77	24,000	10 886	24,300	11 022	24,600	11 158	25,000	11 339
	12.1	45' 9"	13.95	170	51.82	19,000	8 618	19,200	8 708	19,600	8 890	20,200	9 162
180'⑤ (54.86 m)	84.8	189' 0"	57.60	20	6.10					114,200	51 800		
	83.2	188' 6"	57.45	25	7.62							57,100	25 900
	81.6	187' 10"	57.24	30	9.14								
	80.0	187' 0"	57.00	35	10.67	150,400	68 220	151,200	68 583				
	78.4	186' 1"	56.71	40	12.19	131,600	59 692	132,400	60 055	114,200	51 800		
	75.1	183' 8"	55.99	50	15.24	104,100	47 218	104,900	47 581	105,800	47 990		
	71.8	180' 9"	55.08	60	18.29	85,100	38 600	85,900	38 963	86,700	39 326		
	68.4	177' 1"	53.98	70	21.34	71,100	32 250	71,900	32 613	72,700	32 976		
	65.0	172' 10"	52.67	80	24.38	60,500	27 442	61,300	27 805	62,100	28 168	57,100	25 900
	61.4	167' 9"	51.13	90	27.43	52,200	23 677	52,900	23 995	53,700	24 357	54,400	24 675
	57.7	161' 10"	49.33	100	30.48	45,500	20 638	46,200	20 955	46,900	21 273	47,700	21 636
	53.8	155' 1"	47.26	110	33.53	40,000	18 143	40,700	18 461	41,400	18 778	42,100	19 096
	49.8	147' 2"	44.86	120	36.58	35,600	16 102	36,100	16 374	36,600	16 602	37,400	16 964
	45.5	138' 1"	42.08	130	39.62	31,700	14 378	32,300	14 651	32,900	14 923	33,500	15 195
	40.8	127' 8"	38.83	140	42.67	28,500	12 927	29,100	13 199	29,600	13 426	30,200	13 698
	35.7	114' 8"	34.96	150	45.72	25,300	11 475	25,800	11 702	26,300	11 929	26,900	12 201
	29.8	99' 2"	30.22	160	48.77	22,600	10 251	23,100	10 477	23,500	10 659	23,900	10 840
	22.6	78' 10"	24.03	170	51.82	20,400	9 253	20,700	9 389	21,100	9 570	21,400	9 706
	11.8	46' 6"	14.17	180	54.86	16,000	7 257	16,200	7 348	16,500	7 484	17,100	7 756

(continued)

⑤Consult manufacturer for boom lengths greater than 170' (51.82 m).
①Load handled off main boom head sheaves with 10' (3.05 m) boom tip extension mounted on boom.
②Measured vertically from center of boom head sheave to base of turntable bearing mounting.
③Measured from center of tower base section to center of gravity of freely suspended load.

TG-1900 lifting crane notes for crane mounted on a 9' 9" x 9' 9" (2.97 x 2.97 m) tower with or without climbing frame, pedestal, or on a bogie or gantry.

General notes:

1. Loads shown are in pounds and in all cases are limited by strength capabilities of the machine. Proper design of the substructure to withstand the loadings imposed by the machine shall be the responsibility of the purchaser. A deduction must be made from these capacities for weight of load handling equipment such as hook block, hook, sling, grapple, load weighing devices, etc.

2. The operator must make the following considerations when operating the crane:
   a. Make certain the actual load operating radius is the same as the radius specified on the capacity chart. The load radius is measured from the center of the tower base section to the center of gravity of the freely suspended load. The user must make allowances for increases in the load radius caused by stretching of the boom suspension and deflection of the boom and tower.
   b. Prevent shock or impact loading of the crane's structure especially when operating during low temperatures.
   c. Effect of wind on loads with large surface areas.

3. Do not lift a load with a single part of main hoist line at boom angles greater than 84.0°.

4. Do not lift a load on the 10' (3.05 m) boom tip extension when the main hook is in use.

5. For each 10 feet (3.05 m) of boom foot height above the lowest hook position, the following deductions must be made from these lifting capacities:
   192# (87 kg) when using 4 parts of main hoist line
   144# (65 kg) when using 3 parts of main hoist line
   96# (44 kg) when using 2 parts of main hoist line
   48# (22 kg) when using 1 part of main hoist line

6. If the 10' (3.05 m) boom tip extension is not attached to the boom, 2,400 pounds (1 089 kg) may be added to the main hoist lifting capacities but must not exceed the maximum rated capacity for the number of parts of line being used.

7. The boom hanger block is not required when using one part or two parts of main hoist line. If the hanger block is removed when using one part or two parts of main hoist line, 1,800 pounds (816 kg) may be added to these main hoist capacities but must not exceed the maximum rated capacity for the number of parts of line being used.

8. These capacities are based on a 30 m.p.h. (48.27 km/h) wind in the operating condition, and a hook load reduction must be made when winds exceed 30 m.p.h. (48.27 km/h).

9. If the machine is swung 360° in the nonoperating condition, the machine, reeving, and hook blocks must clear any obstacles with the boom stowed at its specified position. This precaution is necessary due to the weathervane rotation of the crane by the wind.

10. These capacities apply only to the machine as originally manufactured and normally equipped by FMC Corporation, Cable Crane and Excavator Division.

Tower mounted with climbing frame

Notes:

1. The maximum free standing tower height with a climbing frame is 162' 7½" (49.57 m) for boom lengths 80' (24.38 m) through 170' (51.82 m). For boom lengths greater than 170' (51.82 m) and for tower heights greater than 162' 7½" (49.57 m), consult manufacturer for additional requirements for the crane.

2. When the crane is in the non-operating condition, the boom must be stowed to conform to one of the following conditions:

Boom length	Condition
80' - 160' (24.38 - 48.77 m)	Stow boom at maximum rated radius
170' (51.82 m)	Stow boom at horizontal position

Tower mounted without climbing frame

Notes:

1. The maximum free standing tower height without a climbing frame is 162' 7½" (49.57 m) for boom lengths 80' (24.38 m) through 200' (60.96 m). For tower heights greater than 162' 7½" (49.57 m), consult manufacturer for additional requirements for the crane.

2. When the crane is in the non-operating condition, the boom must be stowed to conform to one of the following conditions:

Boom length	Condition
80' - 160' (24.38 - 48.77 m)	Stow boom between a 60° boom angle and maximum rated radius
170' - 190' (51.82 - 57.91 m)	Stow boom at maximum rated radius
200' (60.96 m)	Stow boom at horizontal position

Pedestal, bogie or gantry mounted

Notes:

1. Lifting capacities shown are not more than 66% of the tipping loads calculated under static conditions with the boom in the least stable direction. The user must take into account the dynamic effects of hoisting, lowering, booming, swinging, and traveling. Additional factors to be considered are freely suspended loads, track, wind or ground conditions, boom length and proper operating speeds for the existing conditions.

2. The operator must make certain the actual load operating radius is the same as the radius specified on the capacity chart. The load radius is measured from the center of the traveling base to the center of gravity of the freely suspended load. The user must make allowances for increases in the load radius caused by stretching of boom suspension and deflection of the boom and traveling base.

3. For these lifting capacities, the user must make certain that all specified ballast is properly assembled to the traveling base. Ballast may be necessary to meet stability requirement as specified on working areas and ballast requirement plate.

4. Use caution when approaching rail stops with crane bumpers. Excessive rate of contact can result in crane's instability and/or failure of rail stops.

5. When the crane is in the non-operating condition, the rail mounted traveling base must be secured with rail clamps or tie downs to prevent drifting.

We are constantly improving our products and therefore reserve the right to change designs and specifications.

DCM Erectors, Inc.

110 East 42nd Street – 1704, New York, NY 10017, Phone: (212) 599-1603, Fax: (212) 599-1615

77 Belfield Road, Etobicoke, ON, M9W 1E8, Phone: (416) 241-6967, Fax: (416) 3239

Certified Test Weight Schedule

				Weight	Date Certified
Pc	A	TEST WEIGHT BOX	A1	28,580	3/6/2009
Pc	B	Short Beam	B1	16,000	4/3/2009
Pc	C	Long Beam	C1	11,940	4/3/2009
Pc	D	Short Beam	D1	14,060	3/6/2009
Pc	E	Long Beam	E1	25,420	4/3/2009
Pc	F	Long Beam	F1	25,440	3/6/2009
Pc	G	Short Beam	G1	6,600	3/6/2009
Pc	H	Long Beam	H1	25,420	4/3/2009

Lynch-Jacobs, Maureen

From: Lynch-Jacobs, Maureen
Sent: Wednesday, January 25, 2012 9:29 AM
To: 'Delia Shumway'; fcasale@buildings.nyc.gov
Subject: FW: 843-WTC-Tower4_Crane2A_RevisedLoadTest
Attachments: WTC4 Crane 2A Load Test rev1.pdf

Boom

NYC BUILDINGS

Crane / Derrick / Mobile Work Platform Approval and Operation Application / Certificate

Please File 2 Copies
Application Must Be Typewritten

For Internal Use Only	
CD Number	
Date Received	Fee Paid
Invoice No	

1. Application Type							
	Original		✓	Renewal		Change	
Equipment Type:		Mobile Crane	✓	Fix / Climber Tower Crane		Derrick	Work Platform

2 CD Number
3705

3. Applicant Send correspondence to: ☐ Applicant ✓ Owner		Owner	
Name: Michael J Schiavoni		Name: Michael J. Schiavoni	
Title: Member	E-mail: msfederated@aol.com	Title: Member	E-mail: msfederated@aol.com
Company: Federated Crane Co. LLC		Company: Federated Crane Co. LLC	
Address: 1640 New Market Ave.		Address: 1640 New Market Ave.	
City: South PLainfield	State: New Jersey Zip: 07080	City: South Plainfield	State: New Jersey Zip: 07080
Telephone: 917-797-3441	Fax: 732-752-1158	Telephone: 917-797-3441	Fax: 732-752-1158

4. Crane / Derrick / Work Platform Information							
Prototype No.: P-155				Drums		Work Platform Information	
Manufacturer: FMC Link-Belt							
Model: TG-1900		Model Year: 1979		Number of Drums: 3		Platform Type:	
Serial Number: 76G9-1206C				No.	Wire Rope Size		Single Mast
Transmission		Power		1	1 5/8 in.		Twin Mast
✓	Hydraulic		Gas	2	1 1/4 in.		Free Standing
	Mechanical	✓	Diesel	3	7/8 in.	Platforms I.D.'s	
Capacity: 115			Electric	4	in.		

5. Tower / Boom / Jib Section Information			
Maximum Configuration: Tower Crane: Tower: 160 Boom: 200 Jib: 70 Total: 430			Lift Crane: Boom: 200 Jib: 70 Total 270
	Latticed	Solid	
Tower/Mast Section I.D.	x		17802 TGT13-014 TGT13-015 J64 J10827
Boom Section I.D.	x		87711(Heel) 7921(40' Insert) 88132(40' Insert) 79126(Point)
Jib / Sill / Leg Section I.D.	x		97775 (10' Tip Extension)

6. Equipment Dimension					
Overall Carrier		Tower / Mast Property		Derrick Information	
Length 27 ft	Width 13'-2" ft	Tower/Mast Depth 9'-9" ft		Type	
Width With Outriggers Extended na ft		Tower/Mast Width 9'-9" ft		Chicago Boom	Guy Derrick
Tailswing 22 ft		Tower/Mast Height 40' & 13' 7 1/2" ft		Gin Pole	Stiffleg Derrick

7. Statement and Signatures

- The Owner certifies that he will comply with the requirements of § 15.0 of Reference Standards RS 19-2 of the Building Code regarding "Inspection Required by Owner for Cranes & Derricks."
- Falsification of any statement is a misdemeanor under § 26-124 of the Administrative Code and is punishable by a fine or imprisonment, or both
- Falsification of any statement is a misdemeanor under § 26-124 of the Administrative Code and is punishable by a fine or imprisonment, or both

Applicant's Signature	Date	Owner's Signature	Date
	9-26-2011		9-26-2011

For Internal Use Only	TCAO Issued For:
	☐ This Site Only
	Expiration Date
Issued by: Date	Approved by Cranes & Derricks Authorized Signature Date

CERTIFIED TESTING & INSPECTIONS, INC.

TESTING • INSPECTIONS • ENGINEERING

Date: 12-01-11 & 12-05-11
CD # 3705
Report # 58

CLIENT: Federated Crane Co.
1640 New Market Ave.
S. Plainsfield, NJ

SUBJECT:

Magnetic Particle Inspection 100% of All welds on 14 Sections of boom on FMC Crane Model # FMC TG1900 Serial # 76G9-1206C in accordance with New York City Building Code Specifications. Tests were performed at 1640 New Market Ave.,S.Plainsfield, NJ on 12-01-11 & 12-05-11

TEST METHOD AND PROCEDURE:

Magnetic Particle Inspection was accomplished using 'white line' portable magnetic particle machine and using the dry powder and prod methods of inspection. All areas are inspected from two planes to insure 100% coverage. All test results are based at time of inspection.

RESULTS:
X INDICATES WELD LOCATION.

DISTANCE FROM REAR OF SECTION	TOP RIGHT CORD	BOTTOM RIGHT CORD	TOP LEFT CORD	BOTTOM LEFT CORD
#3705-MD 25' Long Machine Deck				
0'4" through 24'8"	X Accepted	X Accepted	X Accepted	X Accepted
#A08-78-01 Turntable Base	X Accepted	X Accepted	X Accepted	X Accepted
#3705-AF 45' A-Frame				
0'4" through 44'8"	X Accepted	X Accepted	X Accepted	X Accepted
* #7921 40' Boom Insert				
0'4" through 39'8"	X Accepted	X Accepted	X Accepted	X Accepted
* #88132 40' Boom Insert				
0'4" through 39'8"	X Accepted	X Accepted	X Accepted	X Accepted
* #779126 40' Point Section				
0'4" through 39'8"	X Accepted	X Accepted	X Accepted	X Accepted
* #97775 10' Tip Extension				
0'4" through 9'8"	X Accepted	X Accepted	X Accepted	X Accepted
* #87711 40' Heel Section				
0'4" through 39'8"	X Accepted	X Accepted	X Accepted	X Accepted

NOTE: Also inspected and found them to be free of weld defects:

- Counterweight - #3705 A,
- Counterweight - #3705 B,
- Counterweight - #3705 C,
- Counterweight - #3705 D,
- 10 ton Aux Ball & Hook - #9816447,
- 30 ton Hook Block - #206-H1.

Respectfully submitted,
CERTIFIED TESTING & INSPECTIONS, INC.

Joseph Cuozzo
NDT - Level III

All reports are confidential property of clients, and information contained may not be published or reproduced, pending our written approval.

P.O. Box 116 • Florence, NJ 08518 • 609.239.0994 • FAX 609.239.2118

2A

CERTIFIED TESTING & INSPECTIONS, INC.

TESTING • INSPECTIONS • ENGINEERING

MAGNETIC PARTICLE INSPECTION

CLIENT: Federated Crane DATE: 12-01-11 & 12-05-11 REPORT# 58MT
JOB #: WEATHER: Sunny / Cloudy
JOB LOCATION: 1640 New Market Ave. S. Plains, NJ
CREW: J.G.
SHIFT TIME: 7:00 AM to 3:00 AM HOURS REG: 8 STAND BY: OT
REQUESTED BY: PHONE #:
CLIENT SIGNATURE, NUMBER & DEPT.:

EQUIPMENT: Contour Probe DA400 MANUFACTURER: Parker Research
S/N: 19457 CALIBRATION DATE: 10-14-11
MEDIA: Dry Powder MANUFACTURER: Magnaflux BATCH #: 11E113
METHOD YOKE: X PROD: COIL: CIR: X LONG: X
DRY: X FLOURESCENT:
PART DESCRIPTION: FMC TG1900
PART S/N: 76G9-1206C / CD#3705
PROCEDURE: CTI-MT-002
ACCEPTANCE CRITERIA: CTI-MT-002 / AWS D1.1

JOB OR DRAWING#	PIECE#	SERIAL #	ACCEPT	REJECT	DEFECT LOCATION	DEFECT TYPE
25' Long Machine Deck	3705-MD	76G9-1206C	X			
Turntable Base	A08-78-01	A08-78-01	X			
45' A-Frame	3705-AF	76G9-1206C	X			
40' Boom Insert	7921	7921	X			
40' Boom Insert	88132	88132	X			
40' Point Section	779126	779126	X			
10' Tip Extension	97775	97775	X			
40' Heel Section	87711	87711	X			
Counterweight	3705 A	76G9-1206C	X			
Counterweight	3705 B	76G9-1206C	X			
Counterweight	3705 C	76G9-1206C	X			
Counterweight	3705 D	76G9-1206C	X			
10 ton Aux Ball & Hook	9816447	9816447	X			
30 ton Hook Block	206-H1	206-H1	X			

REMARKS: All test results are based at the time of inspections.

Respectfully submitted,
CERTIFIED TESTING & INSPECTIONS, INC.

Technician Joseph Cuozzo

All reports are confidential property of clients, and information contained may not be published or reproduced, pending our written approval.

P.O. Box 116 • Florence, NJ 08518 • 609.239.0994 • FAX 609.239.2118

Federated Crane Co., L.L.C.
1640 New Market Avenue South Plainfield NJ 07080
Phone: (917) 797 –3441
Fax: (908) 941-5142

January 5, 2012

Port Authority of NY & NJ
115 Broadway
8th Floor
New York, New York 10006

Attn: Ms Maureen Lynch- Jacobs

Re: CD-3705 Crane 2A Safety Valves

Maureen,
In reference to the safety valves, Load moments system and limit switches on the TG-1900, CD-3705 were all checked and found to be in compliance to the manufactures specification . The machinery deck was assembled in our shop to perform this test.

All safeties and limit switches will also be checked after the machine is erected and before the load test is preformed.

Thanks,

Michael Schiavoni
Operations Manager
Federated Crane Co. LLC

Federated Equipment Co., L. L. C.

110 East 42"d Street, Suite 1704, New York, NY 10017
Phone: 212 599-1603, Fax: 212 599-1615

January 13, 2012

Port Authority of NY & NJ
115 Broadway
New York, NY

Attention: Ms. Maureen Lynch-Jacobs

Reference: **CD** 3705
Hydraulic switches and sensors (safeties)

Dear Ms. Lynch-Jacobs;

This letter is written to inform you that I personally have inspected the various hydraulic switches/sensors on the above mentioned crane while it was stored in the owner's storage yard in New Jersey. All switches/sensors appeared to have been wired correctly.

In addition to the above mentioned inspection, I personally will also re-inspect the switches/sensors after the crane has been fully assembled and is operational.

Very truly yours,

Arnold Van Hees,
Equipment Manager,
Federated Equipment Co., L. L. C.

cc: Larry Davis – Federated Equipment Co., L. L. C.

Tishman Construction Corporation of New York

WTC – Tower 4

Meeting Sign-In Sheet

Date: 1/12/2012

Subject: DCM TOWER CRANE 2A ASSEMBLY

Name	Company	E-Mail Address
EVERDI HILL	TCC	EHill@tishmanna.com
MIKE CASTAGNOLI	TCC	MCASTAGNOLI@TISHMAN.COM
ANDREW Biello	TCC	ABiello@Tishman.com
EDDIE MEAHAN	DCM	
Richard GILBERT	DCM	Richard@DCMTOWERS.com
A VAN HEES	DCM	
Michael Feminella	DCM	
MALCOLM JACOBS	PA	JACOBS@PANYNJ.GOV
Ken Klemens	L14/TCC	KKlemmens@Tishman.com
WHITNEY KNUDSEN	TCC	RKNUDSEN@TISHMAN.COM
FRANK CASTLE	DOB	FCASTLE@BUILDINGS.NYC.GOV
Laine Cronfeld	Charatis	laine.cronfeld@charatisinsurance.com
Joseph Meiloscia	Select Safety (DCM)	JDEMilomo1@aol.com.
Joseph Hiller	DOB	JHiller@Buildings.NYC.GOV
Carl Curatola	TCC	CCuratola@Tishman.com
Mike Yang	PA REO	MYang@panynj.gov
TYLER TROAST	TCC	TTROAST@TISHMAN
Dominique Singh	Howard I. Shapiro	DSingh@HISAssoc.com

Tishman Construction Corporation of New York

WTC – Tower 4

Meeting Sign-In Sheet

Date: 1/12/2012

Subject: DCM TOWER CRANE 2A ASSEMBLY

Name	Company	E-Mail Address
EVERDI HILL	TCC	EHILL@TISHMANNYC.COM
MIKE CASTAGNOLI	TCC	MCASTAGNOLI@TISHMAN.COM
ANDREW Biello	TCC	ABiello@TISHMAN.COM
EDDIE MEAHAN	DCM	
Richard GILBERT	DCM	Richard@DCMERECTORS.COM
A VAN HEES	DCM	
Michael Feminella	DCM	
Marvin Jacobs	PA	JACOBS@PANYNJ.GOV
Ken Klemens	L14/TCC	KKlemmens@Tishman.com
Whitney Knudsen	TCC	RKNUDSEN@TISHMAN.COM
FRANK CASALE	DOB	FCASALE@BUILDINGS.NYC.GOV
Jayne Condron	Charatis	Jayne.Condron@Charatis[illegible].com
Joseph Miloscia	Select Safety (DCM)	JDEMilomo1@aol.com
Joseph Hiller	DOB	JHiller@Buildings.NYC.GOV
Carl Curatola	TCC	CCuratola@Tishman.com
Mike Yang	PA REO	MYANG@PANYNJ.GOV
TYLER TROAST	TCC	TTROAST@TISHMAN
Dominique Singh	Howard I. Shapiro	DSingh@HISAssoc.com

DCM ERECTORS INC

110 East 42nd Street Suite 1710
New York, NY 10017
United States of America

Phone: (212) 599 – 1603
Fax: (212) 599 – 1615

TOWER CRANE - SAFETY MEETING

Date: JAN 13 2012

Foreman: JOHN LONG

Project Name: WTC – Tower 4

Project Location: WTC, New York

TOPICS	COMMENTS FROM WORKERS
TOWER CRANE ERECTION	NONE
TIE OFF	
GATHERING TOOLS	

NAME (Please Print)	SIGNATURE
ARNOLD VAN HEES	
John Long	
Tim Long	
Gary Holder	
Ed [illegible]	
RB KNUDSEN TCC	
Dan Mahoney	
JEFF BIRDSALL	
Joseph Miloscia	

Meeting Held by: (Signature)

EDDIE MEAHAN
(Print Name)

Send copy to: Main Office, and General Contractor

Means & Method – Installing Tower Crane #2A

Date: December 16, 2011 Revision 15 17

WORLD TRADE CENTER-TOWER FOUR, New York, NY – Contract 843-000

Federated Crane Co., L.L.C.
1640 New Market Avenue South Plainfield NJ 07080
Phone: (917) 797 –3441
Fax: (908) 941-5142

January 5, 2012

Port Authority of NY & NJ
115 Broadway
8th Floor
New York, New York 10006

Attn; Ms Maureen Lynch- Jacobs

Re; CD-3705 Crane 2A

Maureen,
Federated Crane approves of Federated Equipment erecting and working our crane on Federated Equipment's mast sections on the World Trade Center Tower Four project.

Thanks,

Michael Schiavoni
Operations Manager
Federated Crane Co. LLC

Tower

MAGNETIC PARTICLE INSPECTION REPORT

CLIENT	LOCATION	INSPECTION DATE	
DCM Erectors Inc. 110 East 42nd Street New York, NY 10017	South Plainfield, NJ	10/20/11 & 10/24/11	
	CAN JOB NO. J12M1002	REPORT NO. 12M1102	
	CLIENT ORDER NO.	SHEET 1	OF 1

COMPONENT/DESCRIPTION/DRAWING NO.
Tower Sections – See Below

MATERIAL	SURFACE CONDITION
Carbon Steel	Clean / Painted

PROCEDURE/WORK INSTRUCTION/TECHNIQUE	ACCEPTANCE STANDARD
MPI IP0019	

EQUIPMENT	POWER/CURRENT	MATERIAL THICKNESS
Magna Flux Y-7 AC/DC 111	115V-60Hz	

METHOD	MEDIUM	BACKGROUND
MPI	Circle Systems Dusting Powder 63 RED 16223	Black

RESULTS

The magnetic particle inspection was completed using a Magna Flux Y-7 yoke and dry particle technique. Every weld on the following list of Tower Sections was inspected 100% from two planes to insure full coverage.

No relevant indications were found during the inspection.

COMPONENTS	LENGTH
FE-21	13'–7½" X 9'-9" X 9'-9"
FE-35	13'–7½" X 9'-9" X 9'-9"
FE-19	13'–7½" X 9'-9" X 9'-9"
FE-20	13'–7½" X 9'-9" X 9'-9"
FE-34	13'–7½" X 9'-9" X 9'-9"
TGT13-019	13'–7½" X 9'-9" X 9'-9"
TGT13-021	13'–7½" X 9'-9" X 9'-9"
TGT13-023	13'–7½" X 9'-9" X 9'-9"

This report relates exclusively to the work ordered and/or the item(s) inspected. It shall not be reproduced except in full without the approval of the inspection body and the client.

CAN INSPECTOR	ISSUING AUTHORITY	CLIENT
SIGN	SIGN	SIGN
NAME Brian Harvey	NAME	NAME Richard Gilbert
QUALS ASNT TC1A MPT LII	DATE	DATE October 26, 2011

CAN

MAGNETIC PARTICLE INSPECTION REPORT

CLIENT DCM Erectors Inc. 110 East 42nd Street New York, NY 10017	**LOCATION** South Plainfield, NJ	**INSPECTION DATE** 11//11/2011	
	CAN JOB NO. J12M1002	**REPORT NO.** 12M1102 TGCE-02	
	CLIENT ORDER NO.	**SHEET** 1	**OF** 1

COMPONENT/DESCRIPTION/DRAWING NO.
1900 Tower Crane
External Climbing System TGCE-02 & Foot Block

MATERIAL Carbon Steel		**SURFACE CONDITION** Clean / Painted
PROCEDURE/WORK INSTRUCTION/TECHNIQUE MPI IP0019		**ACCEPTANCE STANDARD**
EQUIPMENT Magna Flux Y-7 AC/DC 111	**POWER/CURRENT** 115V-60Hz	**MATERIAL THICKNESS**
METHOD MPI	**MEDIUM** Circle Systems Dusting Powder 63 RED 16223	**BACKGROUND** Black

RESULTS
The magnetic particle inspection was completed using a Magna Flux Y-7 yoke and dry particle technique. Every weld on the External Climbing System TGCE-02 and Foot Block was inspected 100% from two planes to insure full coverage.

No relevant indications were found during the inspection.

This report relates exclusively to the work ordered and/or the item(s) inspected. It shall not be reproduced except in full without the approval of the inspection body and the client.

CAN INSPECTOR	ISSUING AUTHORITY	CLIENT
SIGN	**SIGN**	**SIGN**
NAME Ralph Peaston	**NAME**	**NAME** Richard Gilbert
QUALS ASNT TC1A MPT LII	**DATE**	**DATE** Novemver 22, 2011

Cranes & Derricks Division
280 Broadway, 5th Floor, New York, NY 10007
Telephone: (212) 566-4696, Fax: (212) 566-5856
Email: candd@buildings.nyc.gov

SPECIAL REPORT

To:

From: F.Casale

Location: 4 W.T.C.

Reference: erection 3705 tower crane

Date of Inspection: 1-14-12

Inspector: F.Casale **Badge:** 1929

Date of Report:

1-14-12, arrived on-site 7:00am met with Maureen from P.A. tower rigger A.Vanhess #10 4 mast sections and climbing frame and rebella to be installed, L.Shapiro E O R performed unassembled inspection on Friday 1-13-12. Maureen has a E-mail that states they are acceptable, he will submit a report during this week. as of this morning the winds are steady at 9mph,gusting to 19 mph.

Frank Casale Digitally signed by Frank Casale DN: cn=Frank Casale, o=Cranes & Derricks, ou=Dept.Of Buildings, email=fcasale@buildings.nyc.gov, c=US Date: 2012.01.14 09:42:16 -05'00'

Signature **Supervisor**

NYC BUILDINGS

Crane / Derrick / Mobile Work Platform Approval and Operation Application / Certificate

Please File 2 Copies
Application Must Be Typewritten

For Internal Use Only	
CD Number	
Date Received	Fee Paid
Invoice No:	

1. Application Type

	Original	✓	Renewal		Change		
Equipment Type:		Mobile Crane	✓	Fix / Climber Tower Crane		Derrick	Work Platform

2 CD Number: 3705

3. Applicant

Send correspondence to: ☐ Applicant ☐ Owner

Applicant	Owner
Name: Michael J. Schiavoni	Name: Michael J. Schiavoni
Title: Member E-mail msfederated@aol.com	Title: Member E-mail msfederated@aol.com
Company: Federated Crane Co. LLC	Company: Federated Crane Co. LLC
Address: 1640 New Market Ave.	Address: 1640 New Market Ave.
City: South Plainfield State: NJ Zip: 07080	City: South Plainfield State: NJ Zip: 07080
Telephone: (917) 797-3441 Fax: (732) 752-1158	Telephone: (917) 797-3441 Fax: (732) 752-1158

4. Crane / Derrick / Work Platform Information

Prototype No.: P-155
Manufacturer: FMC Link Belt
Model: TG1900 Model Year:
Serial Number: 76G9-1206C

Transmission		Power	
✓	Hydraulic		Gas
	Mechanical	✓	Diesel
Capacity: 115			Electric

Drums

Number of Drums: 3

No.	Wire Rope Size
1	1 5/8 in.
2	1 1/4 in.
3	7/8 in.
4	in.

Work Platform Information

Platform Type:
☐ Single Mast
☐ Twin Mast
☐ Free Standing

Platforms I.D.'s:

5. Tower / Boom / Jib Section Information

Maximum Configuration: Tower Crane: Tower: 160 Boom: 200 Jib: 70 Total: 430 **Lift Crane:** Boom: 200 Jib: 70 Total: 270

	Latticed	Solid	
Tower/Mast Section I.D.			Refer to seperate CD2 for Tower Sections
Boom Section I.D.	X		87711(heel), 7921(40' insert), 88132(40' insert), 779126(point)
Jib / Sill / Leg Section I.D.			97775(10' tip extension)

6. Equipment Dimension

Overall Carrier	Tower / Mast Property	Derrick Information
Length 27 ft Width 12'-2" ft	Tower/Mast Depth Refer to seperate CD2 ft	Type
Width With Outriggers Extended n/a ft	Tower/Mast Width Refer to seperate CD2 ft	☐ Chicago Boom ☐ Guy Derrick
Tailswing 22 ft	Tower/Mast Height Refer to seperate CD2 ft	☐ Gin Pole ☐ Stiffleg Derrick

7. Statement and Signatures

- The Owner certifies that he will comply with the requirements of § 15.0 of Reference Standards RS 19-2 of the Building Code regarding "Inspection Required by Owner for Cranes & Derricks."
- Falsification of any statement is a misdemeanor under § 26-124 of the Administrative Code and is punishable by a fine or imprisonment, or both.
- Falsification of any statement is a misdemeanor under § 26-124 of the Administrative Code and is punishable by a fine or imprisonment, or both.

Applicant's Signature	Date	Owner's Signature	Date
	12-21-2011		12-21-2011

For Internal Use Only	TCAO Issued For:
	☐ This Site Only
	Expiration Date

Issued by: Date	Approved by Cranes & Derricks Authorized Signature	Date

CD-2 REV 08/15/05

Federated Crane Co., L.L.C.
1640 New Market Avenue South Plainfield NJ 07080
Phone: (917) 797 –3441
Fax: (908) 941-5142

TG-1900 CD-3705
SN# 76G9-1206C
FIVE YEAR HISTORY

March 1, 2011 – November 19, 2011
Fulton Transit Center NY, NY

November 1, 2008- June 30, 2010
Croton Water Treatment Plant Bronx, NY

August 4, 2007 - October 17, 2008
600 West 42nd Street New York, New York

November 11, 2006 - May 19, 2007
450 West 17th Street New York, New York

March 15, 2002 - December 14, 2002
330 Jay Street Brooklyn, New York

All times between these dates the machine was located at 1640 New Market Ave. South Plainfield, New Jersey

NYC BUILDINGS

Notification of Raising or Lowering of Climber or Tower Crane

The completed application must reach the Cranes and Derricks Division
48 hours before the raising or lowering of a Tower Crane.

Please file 2 copies
Application must be typewritten

1. Location Of Job

Borough: Manhattan

House No(s).: 150 Street Name: Greenwich Street

Special Place Name: Tower 4

2. Crane Information

C.D. No.: 3450 C.N. No.: Phase:

[ ] External Climbing Crane [✓] Internal Climbing Crane

Dates(s) of Proposed Raising or Lowering: January 15, 2012 Day of the Week: 7:00AM

Note: If the crane raising / lowering operation is to be performed on weekends, holidays, or other than normal working hours, an after-hour work variance must be submitted and approved by the Cranes & Derricks Division prior to commencement of work.

3. Supervisor's Statement

Last Name: Van Hees First Name: Arnold M.I.:

Business Name: DCM Erectors, Inc.

Address: 110 East 42nd Street, Suite 1704

City: New York State: NY Zip: 10017

Phone: (212) 599-1603 Fax: (212) 599-1615

I, Arnold Van Hees, **am a representative of the crane manufacturer, the owner of the crane or the contractor. I have at least 3 years of experience in construction or erection of tower crane and I have been designated as the supervisor in charge of raising or lowering the above crane. I will personally check that all horizontal bracing, collars, shoring and wedges in conformance of the drawings approved by the Cranes & Derricks Division. I will also ensure the tower crane manufacturer's climbing procedure be strictly followed.**

Falsification of any statement is a misdemeanor under Section 26-124 of the Administrative Code and is punishable by a fine, imprisonment, or both.

Signature **Date** January 06, 2012

4. Owner or Contracator Information

Last Name: Davis First Name: Larry M.I.:

Business Name: DCM Erectors, Inc.

Address: 110 East 42nd Street, Suite 1704

City: New York State: NY Zip: 10017

Signature **Date** January 06, 2012

NYC BUILDINGS ALTERNATE TOWER RIGGER

Notification of Erecting or Dismantling of Climber or Tower Crane

The completed application must be received by the Cranes and Derricks Division
2 business days before the raising or lowering of a Tower Crane.
Please file 2 copies; Application must be typewritten

1. Location Of Job

Borough: Manhattan

House No(s).: 150 Street Name: Greenwich Street

2. Crane Information

C.D. No.: 3460 C.N. No.: Phase: 2

External Climbing Crane	X	Internal Climbing Crane

Dates(s) of Proposed Raising or Lowering: January 15, 2012 Time of Proposed Raising or Lowering: 7:00AM

Note: If the crane raising / lowering operation is to be performed on weekends, holidays, or other than normal working hours, an after-hour work variance must be submitted and approved by the Cranes & Derricks Division prior to commencement of work.

3. Rigger's Statement

Last Name: Meahan First Name: Edward M.I.:

License Number: 029

Address: 8 Patriots Way

City: Middletown State: New Jersey Zip: 07748

Phone: 646-808-7616 Fax:

I, Edward Meahan, am a master or tower rigger licensed by the City of New York. I have been designated as the rigger supervising the erection, jumping, and/or dismantling the above-referenced crane. I will be present at the job site in accordance with the rules and regulations of the City of New York and will personally verify that all horizontal bracing, collars, shoring and wedges conform with the drawings approved by the Department. I will also ensure that these operations strictly follow the tower crane manufacturer's erecting, jumping and dismantling procedures Additionally, I will comply with the Department's rules and regulations in designating a rigging foreman and recognize that such designation does not relieve me of any responsibility for liability for any aspects of rigging safety.

I understand that falsification of any statement herein is a misdemeanor under Section 26-124 of the Administrative Code and is punishable by a fine, imprisonment, or both.

Signature: **Date:** January 06, 2012

4. Equipment User's Statement

Last Name: Davis First Name: Larry M.I.:

Business Name: DCM Erectors, Inc.

Address: 110 East 42nd Street, Suite 1704

City: New York State: NY Zip: 10017

I, Larry Davis, am the Equipment User as stated on the approved application for the Certificate of On-Site Inspection. I authorize the above-referenced rigger, or his rigging foreman, to supervise the erection, jumping or dismantling the above-referenced crane.

Signature: **Date:** January 06, 2012

Offital Use Only

Inspector's Name: **Signature** **Date**

CD-7 (Rev 07/07)

LERA

Leslie E. Robertson Associates, R.L.L.P
Consulting Structural Engineers

30 Broad Street, 47th Floor
New York, NY 10004-2304

Tel: (212) 750-9000
Fax: (212) 750-9002
http://www.lera.com

William J. Faschan
Partner
william.faschan@lera.com

02 December 2011
File: P414

Mr. Scott Thompson
Construction Executive
World Trade Center Properties, LLC
250 Greenwich St, 38th Floor
New York, NY 10007
Via e-mail: SThompson@Silvprop.com

RE: Tower 4, DCM Crane 2A Installation

Dear Mr. Thompson,

The following submittals were received by this office for review of loads imposed on base building structure by Crane 2A as stated in the submitted documents:

Package No., 03300-021.0: Crane Shop Drawings

Transmittal No. T4-15325

Item no. C2A Brief Rev. 1 Baseframe & Tie-in forces: returned on 12/02/11 as "Make Corrections Noted, Resubmit Not Required".

Transmittal No. T4-15800

Item no. C2-C2A Brief Rev. 0 Check of Cranes' Support Structure PH-1A & 1B: returned on 12/02/11 as "Make Corrections Noted, Resubmit Not Required".

Transmittal No. T4-15924

Item no. CR-2A Rev. 9 Crane 2A with 760 Tower section+ climber: returned on 12/02/11 as "Make Corrections Noted, Resubmit Not Required".

Item no. FLR_49-52 Rev. 1 Floor 49 to 52 framing with crane 2 in place: returned on 12/02/11 as "Make Corrections Noted, Resubmit Not Required".

Item no. LE-25.1 Rev. 3 Logistic Elevation For Crane #2 & 2A: returned on 12/02/11 as "Make Corrections Noted, Resubmit Not Required".

Item no. LE-25.2 Rev. 3 Logistic Elevation For Crane #1 & 2A: returned on 12/02/11 as "Make Corrections Noted, Resubmit Not Required".

Item no. LE-25.3 Rev. 4 Logistic Elevation for Crane #1 & 2A: returned on 12/02/11 as "Make Corrections Noted, Resubmit Not Required".

Item no. LE-25.4 Rev. 3 Logistic Elevation for Crane #1 & 2A: returned on 12/02/11 as "Make Corrections Noted, Resubmit Not Required".

Item no. LE-25.5 Rev. 3 Logistic Elevation for Crane #1 & 2A: returned on 12/02/11 as "Make Corrections Noted, Resubmit Not Required".
Item no. LE-25.6 Rev. 3 Logistic Elevation for Crane #1 & 2A: returned on 12/02/11 as "Make Corrections Noted, Resubmit Not Required".
Item no. LE-26.1 Rev. 0 Installation of crane 2A on 48th floor: returned on 12/02/11 as "Make Corrections Noted, Resubmit Not Required".
Item no. LE-26.2 Rev. 0 Installation of crane 2A on 48th floor: returned on 12/02/11 as "Make Corrections Noted, Resubmit Not Required".
Item no. LE-26.3 Rev. 0 Installation of crane 2A on 48th floor: returned on 12/02/11 as "Make Corrections Noted, Resubmit Not Required".
Item no. LP-15 Rev. 7 North crane #2 on top 48th floor: returned on 12/02/11 as "Make Corrections Noted, Resubmit Not Required".
Item no. LP-37 Rev. 3 Logistic Plan for Crane #1 & 2A: returned on 12/02/11 as "Make Corrections Noted, Resubmit Not Required".

The submittals above were reviewed only for capability of the permanent base building Tower 4 structure, as designed by our office, to sustain loads imposed as shown on these submittals. The loads provided were signed and sealed by the Contractor's engineer Jaak Jurimae PE (Province of Ontario License No. 22696017; New York Permit LP368). We have found these submittals to be consistent with the requirements of our specification and concur that the permanent base building structure can sustain the loads indicated. We have returned the submittals with comments, however do not require resubmission.

Note that our review of Contractor's submittal does not relieve Contractor from full responsibility for Contractor's means and methods.. Our review was specifically limited to capabilities of the permanent structure and does not warrant as to the correctness of the load data furnished, adequacy of equipment and/or its components, or methods, means and techniques of its use.

Sincerely,
LESLIE [illegible] ASSOCIATES, R.L.L.P

STATE OF NEW YORK
WILLIAM JAMES FASCHAN
No. [illegible]
LICENSED PROFESSIONAL ENGINEER

William J. Faschan

WJF/mal

Cc: Dave Marshall, Tishman, by e-mail: DMarshall@Tishman.com
Theodore Carpinelli, Tishman, by e-mail: TCarpinelli@Tishman.com
Tyler Troast, Tishman, by e-mail: TTroast@Tishman.com

For steel
cm

Troast, Tyler

From:	Gregory Vidgop [GregoryVidgop@asda.ca]
Sent:	Tuesday, December 27, 2011 12:14 PM
To:	Ritchie Bhaskaranand; Troast, Tyler; Richard Gilbert New York Address
Cc:	Carpinelli, Theodore; Mike Zilnik New York Address; Gary Decock; Larry Davis New York Address
Subject:	RE: DRP Upload: TCA 4000.05 - Transmittal #340_WTC-4 Crane 2A Installation Add. 1 (DRP Upload) (e-mail 7)
Attachments:	WELDING quaz-mike bet. 44TH & 45TH reinforcing sketch 11-30-11.pdf; WELDING quaz-bobby 48TH floor efw 12-09-11.pdf; WELDING quaz-mike bet. 43RD & 44TH reinforcing sketch 11-30-11.pdf

Ritchie,
this email is to confirm that a technician under my direction has inspected the column, diagonal and beams reinforcements required for the crane 2A installation. The members reinforcement has been completed as per EOR's requirements. The inspection reports are attached.
Please contact me in case of any questions.

Gregory Vidgop, P.E.
DCM Erectors - MRP
1640 New Market Ave
S. Plainfield, NJ 07080
Phone: 732-968-6061 x21
Fax: 732-968-5675
E-Mail GregoryV@asda.ca

From: Ritchie Bhaskaranand
Sent: Friday, December 23, 2011 11:03 AM
To: 'TTroast@tishman.com'; Richard Gilbert New York Address; Gregory Vidgop
Cc: 'tcarpinelli@tishman.com'; Mike Zilnik New York Address
Subject: Re: DRP Upload: TCA 4000.05 - Transmittal #340_WTC-4 Crane 2A Installation Add. 1 (DRP Upload) (e-mail 7)

The reinforcing is already completed , Gregory will write a letter

---

From: Troast, Tyler [mailto:ttroast@tishman.com]
Sent: Friday, December 23, 2011 09:37 AM
To: Richard Gilbert New York Address; Ritchie Bhaskaranand
Cc: Carpinelli, Theodore <tcarpinelli@tishman.com>; Mike Zilnik New York Address
Subject: FW: DRP Upload: TCA 4000.05 - Transmittal #340_WTC-4 Crane 2A Installation Add. 1 (DRP Upload) (e-mail 7)

Richard/ Ritchie,

See below. The PA responded to items #8 and #12. Can we have Jaak or Gregory write an e-mail indicating that the reinforcing is not required to be installed until the crane is operational. The PA thinks it needs to be installed prior to the dunnage. For item #12 we will probably need something from Kanzler/ Federated Crane.

Thanks,
Tyler

Tyler Troast
Assistant Project Manager

DCM ERECTORS INC.

110 East 42nd Street Suite 1710
New York, NY 10017
United States of America

Phone: (212) 599-1603
Fax: (212) 599-1615

WELDING INSPECTION REPORT

PROJECT: World Trade Center	**INSPECTOR: M. Williams**
PROJECT ADDRESS: WORLD TRADE CENTER Tower Four New York, NY	**DATE: 11/30/11**
ACCEPTANCE STANDARDS: AWS D1.1 (2010)	REF. SPEC: 05100
ACCEPTANCE CRITERIA: DRAWINGS & PROJECT SPECIFICATIONS	REF.DWG:sketch/pt 19/sheet 74

LOCATIONS: **4CD/4C5**

FRAMING / GRID **BET. 43RD & 44TH FRAME**

REINFORCING FOR CRANE 2 AND CRANE 2A LOADING

STAGES OF INSPECTION:	Base Metal Preparation [X]	Fit-up & Alignment [X]	Root Pass [X]
	Intermediate Passes: [X]	Final Inspection: [X]	Re-Inspection: [ ]

MACHINE TYPE: LINCOLN	**AMPS: 139-188**	**POLARITY: DC+**
MAKE: XMT 350VS	**PROCESS: SMAW**	**POSITION: 2F-2G thru 4F**
AWS JOINT DESIGN: TC-U4a	**THICKNESS: 3/4"**	**WELD SIZE : .312" - .375"**
[Groove]/[Fillet]/ Plug / Spot / Slot / Other:	**ELECTRODE: E7018**	
BASE MATERIAL: 572 GR. 50/572 GR. 50	**DIAMETER (IF PIPE):**	

WELDER	**LICENSE #**
MIKE DONNELLY	7369

SUMMARY OF INSPECTION:

PLATES WELDED TO EXISTING COLUMN FLANGE.

INSPECTION STATUS:	Accepted: [X]	Rejected: [ ]	Work in Progress: [ ]

DCM ERECTORS INC.

110 East 42nd Street Suite 1710
New York, NY 10017
United States of America

Phone: (212) 599-1603
Fax: (212) 599-1615

WELDING INSPECTION REPORT

PROJECT: World Trade Center	**INSPECTOR: M. Williams**
PROJECT ADDRESS: WORLD TRADE CENTER Tower Four New York, NY	**DATE: 11/30/11**
ACCEPTANCE STANDARDS: AWS D1.1 (2010)	REF. SPEC: 05100
ACCEPTANCE CRITERIA: DRAWINGS & PROJECT SPECIFICATIONS	REF.DWG:sketch/pt 19/sheet 74

LOCATIONS: **4CD/4C4**

FRAMING / GRID **BET. 44TH & 45TH FRAME**

REINFORCING FOR CRANE 2 AND CRANE 2A LOADING

STAGES OF INSPECTION:	Base Metal Preparation [X]	Fit-up & Alignment [X]	Root Pass [X]
	Intermediate Passes: [X]	Final Inspection: [X]	Re-Inspection: [ ]

MACHINE TYPE: LINCOLN	**AMPS: 139-188**	**POLARITY: DC+**
MAKE: XMT 350VS	**PROCESS: SMAW**	**POSITION: 2F-2G thru 4F**
AWS JOINT DESIGN: TC-U4a	**THICKNESS: 3/4"**	**WELD SIZE : .312" - .375"**
[Groove]/[**Fillet**]/ Plug / Spot / Slot / Other:	**ELECTRODE: E7018**	
BASE MATERIAL: 572 GR. 50/572 GR. 50	**DIAMETER (IF PIPE):**	

WELDER	**LICENSE #**
MIKE DONNELLY	7369

SUMMARY OF INSPECTION:

PLATES WELDED TO EXISTING COLUMN FLANGE.

INSPECTION STATUS:	Accepted: [X]	Rejected: [ ]	Work in Progress: [ ]

DCM ERECTORS INC.

110 East 42nd Street Suite 1710
New York, NY 10017
United States of America

Phone: (212) 599-1603
Fax: (212) 599-1615

WELDING INSPECTION REPORT

PROJECT: World Trade Center	**INSPECTOR: M. Williams**
PROJECT ADDRESS: WORLD TRADE CENTER Tower Four New York, NY	**DATE: 12/09/11**
ACCEPTANCE STANDARDS: AWS D1.1 (2010)	REF. SPEC: 05100
ACCEPTANCE CRITERIA: DRAWINGS & PROJECT SPECIFICATIONS	REF.DWG: SK. Modification

LOCATIONS:	**403-4C4/4CD**
FRAMING / GRID	**BET. 48TH FRAME**

DET. A-A , B-B (CRANE 2A LOADING)

STAGES OF INSPECTION:	Base Metal Preparation	X	Fit-up & Alignment	X	Root Pass X
	Intermediate Passes:	X	Final Inspection:	X	Re-Inspection:

MACHINE TYPE: LINCOLN	**AMPS: 139-188**	**POLARITY: DC+**
MAKE: XMT 350VS	**PROCESS: SMAW**	**POSITION: 1G, 2F THRU 4F**
AWS JOINT DESIGN:	**THICKNESS: 3/8" THRU 5/8"**	**WELD SIZE : .187"- .375", .625"**
[Groove]/[Fillet]/ Plug / Spot / Slot / Other:	**ELECTRODE: E7018**	
BASE MATERIAL: 572 GR. 50/572 GR. 50	**DIAMETER (IF PIPE):**	

WELDER	**LICENSE #**
ROBERT T. FANNING	7548

SUMMARY OF INSPECTION:

PLATE WELDED TO PLATE.
PLATE WELDED TO WEB OF EXISTING BEAM.
PLATE WELDED TO WEB OF EXISTING BEAM AND FLANGE OF EXISTING COLUMN.
BEAM STUB FLANGE WELDED TO DIAGONAL STUB FLANGE.

INSPECTION STATUS:	Accepted: X	Rejected:	Work in Progress:

Federated Crane Co., L.L.C.
1640 New Market Avenue South Plainfield NJ 07080
Phone: (917) 797 –3441
Fax: (908) 941-5142

January 5, 2012

Port Authority of NY & NJ
115 Broadway
8th Floor
New York, New York 10006

Attn: Ms Maureen Lynch- Jacobs

Re: CD-3705 Crane 2A

Maureen,
Federated Crane approves of Federated Equipment erecting and working our crane on Federated Equipment's mast sections on the World Trade Center Tower Four project.

Thanks,

Michael Schiavoni
Operations Manager
Federated Crane Co. LLC

DCM ERECTORS INC.
110 East 42nd St. New York, NY 10017 Phone: (212) 599-1603 Fax: (212) 599-1615
77 Belfield Road Etobicoke, Ontario M9W 1G6 Phone (416) 241 6967 Fx (416) 241 3239

Dunne

REPORT OF ULTRASONIC EXAMINATION

Project:	Tower 4	Project / Job No.:	832
Client:	PANYNJ	Location:	MRP Steel, SouthPlainfield NJ, Shop # 2
Contact:		Date:	9/17/2011

TESTING PARAMETERS

Equipment Identification		Transducer		Material			
Manufacturer:	GE	Angle:		Type:	Carbon Steel	Thickness:	1" 3/8"
Model:	USN-58L	Size:	.63X.63	Weld Joint AWS:	As per drawing		
Serial No.:	01RY8D	Mhz:	2.25	Welding Process(es):	FCAW		
Quality Requirements: Sec. No.:	AWS D 1.1 Sec. 6 ' Table 6.2						

WELD LOCATION AND IDENTIFICATION SKETCH

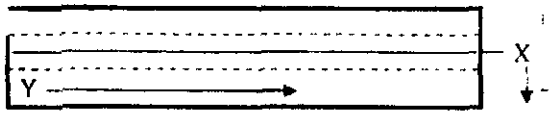

Comments: Piece # M4003-4
Crane Tower 4. Drawing 1003

GRID / ID / LOCATION	WELD JOINT	TRANSDUCER ANGLE (DEG)	FACE	Leg(s)	Decibels: Indication Level a	Decibels: Reference Level b	Decibels: Attenuation Factor c	Decibels: Indication Rating d	Discontinuity (inches): Length	Discontinuity (inches): Angular Distance (Sound Path)	Discontinuity (inches): Depth From "A" Surface	Distance: From X	Distance: From Y	Acceptable	Rejectable
	M4003-4	0	A			75%								✓	
		70	A	I/II		46								✓	
		70	B	I/II		46								✓	

Inspector: Irson Valentin
Level: II
Date: 9/17/2011

For Reference use only.

DCM ERECTORS INC.
110 East 42nd St. New York, NY 10017 Phone: (212) 599-1603 Fax: (212) 599-1615
77 Belfield Road Etobicoke, Ontario M9W 1G6 Phone (416) 241 6967 Fx (416) 241 3239

REPORT OF ULTRASONIC EXAMINATION

Project:	Tower 4	Project / Job No.:	832
Client:	PANYNJ	Location:	MRP Steel, SouthPlainfield NJ, Shop # 2
Contact:		Date:	9/16/2011

TESTING PARAMETERS

Equipment Identification		Transducer		Material			
Manufacturer:	GE	Angle:		Type:	Carbon Steel	Thickness:	1 - 3/8
Model:	USN-58L	Size:	.63X.63	Weld Joint AWS:	As per drawing		
Serial No.:	01RY8D	Mhz:	2.25	Welding Process(es):	FCAW		
Quality Requirements, Sec. No.:	AWS D 1.1 Sec. 6 / Table 6.2						

WELD LOCATION AND IDENTIFICATION SKETCH

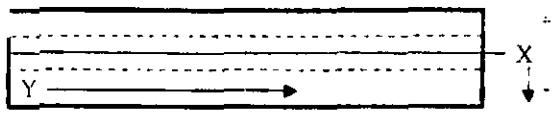

Comments: Piece # M4003-3
Crane Tower 4. Drawing 1003

GRID / ID / LOCATION	WELD JOINT	TRANSDUCER ANGLE (DEG)	FACE	Leg(s)	Decibels: Indication Level a	Decibels: Reference Level b	Decibels: Attenuation Factor c	Decibels: Indication Rating d	Discontinuity (inches): Length	Discontinuity (inches): Angular Distance (Sound Path)	Discontinuity (inches): Depth From "A" Surface	Distance: From X	Distance: From Y	Acceptable	Rejectable
	M4003-3	0	A			75%								✓	
		70	A	I/II		46								✓	
		70	B	I/II		46								✓	

Inspector: Irson Valentin
Level: II
Date: 9/16/2011

For Reference use only.

DCM ERECTORS INC.
110 East 42nd St. New York, NY 10017 Phone: (212) 599-1603 Fax: (212) 599-1615
77 Belfield Road Etobicoke, Ontario M9W 1G6 Phone (416) 241 6967 Fx (416) 241 5239

REPORT OF ULTRASONIC EXAMINATION

Project:	Tower 4	Project / Job No.:	832
Client:	PANYNJ	Location:	MRP Steel, SouthPlainfield NJ, Shop # 2
Contact:		Date:	9/14/2011

TESTING PARAMETERS

Equipment Identification		Transducer		Material			
Manufacturer:	GE	Angle:		Type:	Carbon Steel	Thickness:	1" - 3/8"
Model:	USN-58L	Size:	.63X.63	Weld Joint AWS:	As per drawing		
Serial No.:	01RY8D	Mhz:	2.25	Welding Process(es):	FCAW		
Quality Requirements. Sec. No.:	AWS D 1.1 Sec. 6 ' Tabl 6.2						

WELD LOCATION AND IDENTIFICATION SKETCH

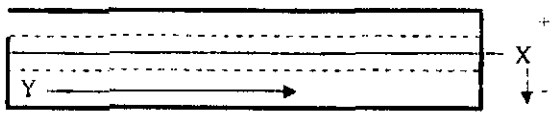

Comments: Piece # M4003-2
Crane Tower 4. Drawing 1003

GRID / ID / LOCATION	WELD JOINT	TRANSDUCER ANGLE (DEG)	FACE	Leg(s)	Decibels: Indication Level a	Decibels: Reference Level b	Decibels: Attenuation Factor c	Decibels: Indication Rating d	Discontinuity (inches): Length	Discontinuity (inches): Angular Distance (Sound Path)	Discontinuity (inches): Depth From "A" Surface	Distance: From X	Distance: From Y	Acceptable	Rejectable
	M4003-2	0	A			78%								✓	
		70	A	I/II		46								✓	
		70	B	I/II		46								✓	

Inspector: Irson Valentin
Level: II
Date: 9/14/2011

For Reference use only.

DCM ERECTORS INC.
110 East 42nd St. New York, NY 10017 Phone: (212) 599-1603 Fax: (212) 599-1615
77 Belfield Road Etobicoke, Ontario M9W 1G6 Phone (416) 241 6967 Fx (416) 241 3239

REPORT OF ULTRASONIC EXAMINATION

Project:	Tower 4	Project / Job No.:	832
Client:	PANYNJ	Location:	MRP Steel, SouthPlainfield NJ, Shop # 2
Contact:		Date:	9/13/2011

TESTING PARAMETERS

Equipment Identification		Transducer		Material			
Manufacturer:	GE	Angle:		Type:	Carbon Steel	Thickness:	1" 3/8"
Model:	USN-58L	Size:	.63X.63	Weld Joint AWS:	As per drawing		
Serial No.:	01RY8D	Mhz:	2.25	Welding Process(es):	FCAW		
Quality Requirements. Sec. No.:	AWS D 1.1 Sec. 6 ' Tabl 6.2						

WELD LOCATION AND IDENTIFICATION SKETCH

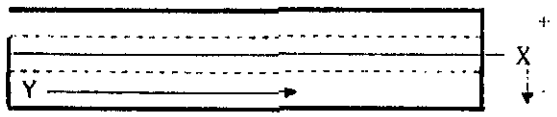

Comments: Piece # M4003-1
Crane Tower 4. Drawing 1003

GRID / ID / LOCATION	WELD JOINT	TRANSDUCER ANGLE (DEG)	FACE	Leg(s)	Decibels: Indication Level a	Decibels: Reference Level b	Decibels: Attenuation Factor c	Decibels: Indication Rating d	Discontinuity (inches): Length	Discontinuity (inches): Angular Distance (Sound Path)	Discontinuity (inches): Depth From "A" Surface	Distance: From X	Distance: From Y	Acceptable	Rejectable
	M4003-1	0	A			75%								✓	
		70	A	I/II		46								✓	
		70	B	I/II		46								✓	

Inspector: Irson Valentin
Level: II
Date: 9/13/2011

For Reference use only.

DCM ERECTORS INC.
110 East 42nd St. New York, NY 10017 Phone: (212) 599-1603 Fax: (212) 599-1615
77 Belfield Road Etobicoke, Ontario M9W 1G6 Phone 9416) 241 6967 Fx (416) 241 3239

MAGNETIC PARTICLE EXAMINATION REPORT

Project: Tower 4 | Date: 10/6/2011

Owner: PANYNJ

Contract No.: Contract #

FIELD: MRP Steel Shop # 2

Acceptance Criteria (Code): ASTM E 709

Remarks: Crane Tower 4 1003K1

Date	Piece Mark	Weld Identification	Interpretation		Repairs		Remarks
			Accept	Reject	Accept	Reject	
	M4003-1		Yes				

Method of Inspection:			Equipment:		Model:
[X] Dry	[ ] Wet	[ ] Residual	Instrument:	Magnaflux	Y-7
[X] AC	[ ] DC	[ ] Half-wave	Serial No.:	43550	Spacing:
[ ] Prod	[X] Yoke	[X] Continuous	Strength of field:		

Reported to: _____ Technician: Irson Valentin Level-II

DCM ERECTORS INC.
110 East 42nd St. New York, NY 10017 Phone: (212) 599-1603 Fax: (212) 599-1615
77 Belfield Road Etobicoke, Ontario M9W 1G6 Phone 9416) 241 6967 Fx (416) 241 3239

MAGNETIC PARTICLE EXAMINATION REPORT

Project: Tower 4 | Date: 10/3/2011

Owner: PANYNJ

Contract No.: Contract #

FIELD.: MRP Steel Shop # 2

Acceptance Criteria (Code): ASTM E 709

Remarks: Crane Tower 4 1004K1

Date	Piece Mark	Weld Identification	Interpretation		Repairs		Remarks
			Accept	Reject	Accept	Reject	
	P3003		Yes				

Method of Inspection:			Equipment:		Model:
[X] Dry	[ ] Wet	[ ] Residual	Instrument:	Magnaflux	Y-7
[X] AC	[ ] DC	[ ] Half-wave	Serial No.:	43550	Spacing:
[ ] Prod	[X] Yoke	[X] Continuous	Strength of field:		

Reported to: _____ Technician: Irson Valentin Level-II

DCM ERECTORS INC.
110 East 42nd St. New York, NY 10017 Phone: (212) 599-1603 Fax: (212) 599-1615
77 Belfield Road Etobicoke, Ontario M9W 1G6 Phone 9416) 241 6967 Fx (416) 241 3239

MAGNETIC PARTICLE EXAMINATION REPORT

Project: Tower 4 | Date: 10/3/2011

Owner: PANYNJ

Contract No.: Contract #

FIELD: MRF Steel Shop # 2

Acceptance Criteria (Code): ASTM E 709

Remarks: Crane Tower 4 1004K1

Date	Piece Mark	Weld Identification	Interpretation		Repairs		Remarks
			Accept	Reject	Accept	Reject	
	P3008		Yes				

Method of Inspection:			Equipment:		Model:
[X] Dry	[ ] Wet	[ ] Residual	Instrument:	Magnaflux	Y-7
[X] AC	[ ] DC	[ ] Half-wave	Serial No.:	43550	Spacing:
[ ] Prod	[X] Yoke	[X] Continuous	Strength of field:		

Reported to: _____ Technician: Irson Valentin Level-II

DCM ERECTORS INC.
110 East 42nd St. New York, NY 10017 Phone: (212) 599-1603 Fax: (212) 599-1615
77 Belfield Road Etobicoke, Ontario M9W 1G6 Phone 9416) 241 6967 Fx (416) 241 3239

MAGNETIC PARTICLE EXAMINATION REPORT

Project: Tower 4 | Date: 10/6/2011

Owner: PANYNJ

Contract No.: Contract #

FIELD: MRP Steel Shop # 2

Acceptance Criteria (Code): ASTM E 709

Remarks: Crane Tower 4 1004K1

Date	Piece Mark	Weld Identification	Interpretation		Repairs		Remarks
			Accept	Reject	Accept	Reject	
	P3060		Yes				

Method of Inspection:			Equipment:		Model:
[X] Dry	[ ] Wet	[ ] Residual	Instrument:	Magnaflux	Y-7
[X] AC	[ ] DC	[ ] Half-wave	Serial No.:	43550	Spacing:
[ ] Prod	[X] Yoke	[X] Continuous	Strength of field:		

Reported to: _____ Technician: Irson Valentin Level-II

DCM ERECTORS INC.
110 East 42nd St. New York, NY 10017 Phone: (212) 599-1603 Fax: (212) 599-1615
77 Belfield Road Etobicoke, Ontario M9W 1G6 Phone 9416) 241 6967 Fx (416) 241 3239

MAGNETIC PARTICLE EXAMINATION REPORT

Project: Tower 4 | Date: 10/14/2011

Owner: Tishman Construction

Contract No.: Contract # 832

FIELD.: MRP Steel Shop # 2

Acceptance Criteria (Code): ASTM E 709

Remarks: Top side of Girder

Date	Piece Mark	Weld Identification	Interpretation		Repairs		Remarks
			Accept	Reject	Accept	Reject	
10/14/2011	1004K01	(Rev. 4)					
	p3026	Fillet welds	Yes	-	None	-	
	p3046	Fillet welds	Yes	-	None	-	
	p3066	Fillet welds	Yes	-	None	-	
	p3036	Fillet welds	Yes	-	None	-	

Method of Inspection:			Equipment:		Model:
[X] Dry	[ ] Wet	[ ] Residual	Instrument:	Magnaflux	Y-7
[X] AC	[ ] DC	[ ] Half-wave	Serial No.:	43550	Spacing:
[ ] Prod	[X] Yoke	[X] Continuous	Strength of field:		

Reported to: W. Sturge

Technician: P. Pokharel

DCM ERECTORS INC.
110 East 42nd St. New York, NY 10017 Phone: (212) 599-1603 Fax: (212) 599-1615
77 Belfield Road Etobicoke, Ontario M9W 1G6 Phone 9416) 241 6967 Fx (416) 241 3239

MAGNETIC PARTICLE EXAMINATION REPORT

Project: Tower 4 | Date: 10/14/2011

Owner: Tishman Construction

Contract No.: Contract # 832

FIELD.: MRP Steel Shop # 2

Acceptance Criteria (Code): ASTM E 709

Remarks: Top side of Girder

Date	Piece Mark	Weld Identification	Interpretation		Repairs		Remarks
			Accept	Reject	Accept	Reject	
10/14/2011	1003K01	(Rev. 4)					
	p3054	Fillet welds	Yes	-	None	-	
	p3008	Fillet welds	Yes	-	None	-	
	p3046	Fillet welds	Yes	-	None	-	
	p3023	Fillet welds	Yes	-	None	-	
	p3029	Fillet welds	Yes	-	None	-	
	p3064	Fillet welds	Yes	-	None	-	
	p3066	Fillet welds	Yes	-	None	-	
	p3003	Fillet welds	Yes	-	None	-	
	p3053	Fillet welds	Yes	-	None	-	
	p3037	Fillet welds	Yes	-	None	-	

Method of Inspection:			Equipment:		Model:
[X] Dry	[ ] Wet	[ ] Residual	Instrument:	Magnaflux	Y-7
[X] AC	[ ] DC	[ ] Half-wave	Serial No.:	43550	Spacing:
[ ] Prod	[X] Yoke	[X] Continuous	Strength of field:		

Reported to: W. Sturge

Technician: P. Pokharel

DCM ERECTORS INC.
110 East 42nd St. New York, NY 10017 Phone: (212) 599-1603 Fax: (212) 599-1615
77 Belfield Road Etobicoke, Ontario M9W 1G6 Phone 9416) 241 6967 Fx (416) 241 3239

MAGNETIC PARTICLE EXAMINATION REPORT

Project: Tower 4 | Date: 10/14/2011

Owner: Tishman Construction

Contract No.: Contract # 832

FIELD.: MRP Steel Shop # 2

Acceptance Criteria (Code): ASTM E 709

Remarks: Top side of Girder

Date	Piece Mark	Weld Identification	Interpretation		Repairs		Remarks
			Accept	Reject	Accept	Reject	
10/14/2011	1001K01	Rev. 2					
	m4002	Fillet welds	Yes	-	None	-	
	p3015	Fillet welds	Yes	-	None	-	
	p3030	Fillet welds	Yes	-	None	-	
	p3012	Fillet welds	Yes	-	None	-	
	m4001	Fillet welds	Yes	-	None	-	
	p3011	Fillet welds	Yes	-	None	-	
	p3014	Fillet welds	Yes	-	None	-	
	p3016	Fillet welds	Yes	-	None	-	
	p3041	Fillet welds	Yes	-	None	-	
	p3018	Fillet welds	Yes	-	None	-	
	p3019	Fillet welds	Yes	-	None	-	
	p3010	Fillet welds	Yes	-	None	-	
	p3009	Fillet welds	Yes	-	None	-	
	p3017	Fillet welds	Yes	-	None	-	

Method of Inspection:			Equipment:		Model:
[X] Dry	[ ] Wet	[ ] Residual	Instrument:	Magnaflux	Y-7
[X] AC	[ ] DC	[ ] Half-wave	Serial No.:	43550	Spacing:
[ ] Prod	[X] Yoke	[X] Continuous	Strength of field:		

Reported to: W. Sturge

Technician: P. Pokharel

DCM ERECTORS INC.
110 East 42nd St. New York, NY 10017 Phone: (212) 599-1603 Fax: (212) 599-1615
77 Belfield Road Etobicoke, Ontario M9W 1G6 Phone 9416) 241 6967 Fx (416) 241 3239

MAGNETIC PARTICLE EXAMINATION REPORT

Project: Tower 4 | Date: 10/14/2011

Owner: Tishman Construction

Contract No.: Contract # 832

FIELD.: MRP Steel Shop # 2

Acceptance Criteria (Code): ASTM E 709

Remarks: Top side of Girder

Date	Piece Mark	Weld Identification	Interpretation		Repairs		Remarks
			Accept	Reject	Accept	Reject	
10/14/2011	1001K01						
	p3004	Fillet welds	Yes	-	None	-	
	p3048	Fillet welds	Yes	-	None	-	
	p3009	Fillet welds	Yes	-	None	-	
	p3022	Fillet welds	Yes	-	None	-	
	p3019	Fillet welds	Yes	-	None	-	
	p3069	Fillet welds	Yes	-	None	-	

Method of Inspection:			Equipment:		Model:
[X] Dry	[ ] Wet	[ ] Residual	Instrument:	Magnaflux	Y-7
[X] AC	[ ] DC	[ ] Half-wave	Serial No.:	43550	Spacing:
[ ] Prod	[X] Yoke	[X] Continuous	Strength of field:		

Reported to: W. Sturge

Technician: P. Pokharel

DCM ERECTORS INC.
110 East 42nd St. New York, NY 10017 Phone: (212) 599-1603 Fax: (212) 599-1615
77 Belfield Road Etobicoke, Ontario M9W 1G6 Phone 9416) 241 6967 Fx (416) 241 3239

MAGNETIC PARTICLE EXAMINATION REPORT

Project Tower 4 Date 10/15/2011

Owner PA NYNJ

Contract No. 832

FIELD. MRP shop 2

Acceptance Criteria (Code) ASTM E709 AWS D1.1

Remarks: Plate Girder for crane all welds checked 100%

Date	Piece Mark	Weld Identification	Interpretation		Repairs		Remarks
			Accept	Reject	Accept	Reject	
	1002k1	p3061 to p3061	x				CJP checked B/S
		m4001 to p3061	x				
		m4001 to p3014	x				
		m4001 to p3069	x				
	Note Piece marks are used multiple locations through out assembly						

Method of Inspection:			Equipment:		Model:
[x] Dry	[ ] Wet	[ ] Residual	Instrument:	Manaflux	Y-7
[x] AC	[ ] DC	[ ] Half-wave	Serial No.:	43550	Spacing:
[ ] Prod	[x] Yoke	[x] Continuous	Strength of field:		4 to 6

Reported to: _____ Technician: Paul Lenox Level II

DCM ERECTORS INC.
110 East 42nd St. New York, NY 10017 Phone: (212) 599-1603 Fax: (212) 599-1615
77 Belfield Road Etobicoke, Ontario M9W 1G6 Phone 9416) 241 6967 Fx (416) 241 3239

MAGNETIC PARTICLE EXAMINATION REPORT

Project Tower 4 Date 10/15/2011

Owner PA NYNJ

Contract No. 832

FIELD. MRP shop 2

Acceptance Criteria (Code) ASTM E709 AWS D1.1

Remarks: Plate Girder for crane all welds checked 100%

Date	Piece Mark	Weld Identification	Interpretation		Repairs		Remarks
			Accept	Reject	Accept	Reject	
	1003k1	p3060 to p3003	x				4 locations
		p3060 to p3008	x				4 locations
		p3060 to p3054	x				
		p3060 to p3053	x				
	Note Piece marks are used multiple locations through out assembly						

Method of Inspection:			Equipment:		Model:
[x] Dry	[ ] Wet	[ ] Residual	Instrument:	Manaflux	Y-7
[x] AC	[ ] DC	[ ] Half-wave	Serial No.:	43550	Spacing:
[ ] Prod	[x] Yoke	[x] Continuous	Strength of field:		4 to 6

Reported to: _____ Technician: Paul Lenox Level II

DCM ERECTORS INC.

110 East 42nd Street Suite 1710
New York, NY 10017
United States of America

Phone: (212) 599-1603
Fax: (212) 599-1615

WELDING INSPECTION REPORT

PROJECT: Tower 4 Crane Girder	**INSPECTOR: Dharam**
PROJECT ADDRESS:Shop 2, S Plainfield, NJ	**DATE: 10/15/11**
ACCEPTANCE STANDARDS: AWS D1.1	**REF. SPEC:**
ACCEPTANCE CRITERIA: DRAWINGS & PROJECT SPECIFICATIONS	**REF.DWG:**

LOCATIONS:

FRAMING / GRID **PLATE GIRDER**

STAGES OF INSPECTION:	Base Metal Preparation ok	Fit-up & Alignment ok	Root Pass ok
	Intermediate Passes: ok	Final Inspection: ok	Re-Inspection:

SUMMARY OF INSPECTION:

1002K1 -- All welds were inspected visually and were found acceptable in accordance with AWS D1.1

1003K1 -- All welds were inspected visually and were found acceptable in accordance with AWS D1.1

1001K1 -- All welds were inspected visually and were found acceptable in accordance with AWS D1.1

INSPECTION STATUS:	Accepted: X	Rejected:	Work in Progress:

DCM ERECTORS INC.

110 East 42nd Street Suite 1710
New York, NY 10017
United States of America

Phone: (212) 599-1603
Fax: (212) 599-1615

WELDING INSPECTION REPORT

PROJECT: Tower 4 Crane Girder	**INSPECTOR: Dharam**
PROJECT ADDRESS:Shop 2, S Plainfield, NJ	**DATE: 10/10/11**
ACCEPTANCE STANDARDS: AWS D1.1	**REF. SPEC:**
ACCEPTANCE CRITERIA: DRAWINGS & PROJECT SPECIFICATIONS	**REF.DWG:**

LOCATIONS:

FRAMING / GRID PLATE GIRDER

STAGES OF INSPECTION:	Base Metal Preparation ok	Fit-up & Alignment ok	Root Pass ok
	Intermediate Passes: ok	Final Inspection: ok	Re-Inspection:

SUMMARY OF INSPECTION:

1004K1 -- All welds were inspected visually and were found acceptable in accordance with AWS D1.1

INSPECTION STATUS:	Accepted: X	Rejected:	Work in Progress:

DCM ERECTORS INC.

110 East 42nd Street Suite 1710
New York, NY 10017
United States of America

Phone: (212) 599-1603
Fax: (212) 599-1615

WELDING INSPECTION REPORT

PROJECT: Tower 4 Crane Girder	**INSPECTOR: Dharam**
PROJECT ADDRESS:Shop 2, S Plainfield, NJ	**DATE: 10/14/11**
ACCEPTANCE STANDARDS: AWS D1.1	**REF. SPEC:**
ACCEPTANCE CRITERIA: DRAWINGS & PROJECT SPECIFICATIONS	**REF.DWG:**

LOCATIONS:

FRAMING / GRID **PLATE GIRDER**

STAGES OF INSPECTION:	Base Metal Preparation ok	Fit-up & Alignment ok	Root Pass ok
	Intermediate Passes: ok	Final Inspection: ok	Re-Inspection:

SUMMARY OF INSPECTION:

1002K1 -- All welds were inspected visually and were found acceptable in accordance with AWS D1.1

1003K1 -- All welds were inspected visually and were found acceptable in accordance with AWS D1.1

1001K1 -- All welds were inspected visually and were found acceptable in accordance with AWS D1.1

1004K1 -- All welds were inspected visually and were found acceptable in accordance with AWS D1.1

INSPECTION STATUS:	Accepted: X	Rejected:	Work in Progress:

DCM ERECTORS INC.
110 East 42nd St. New York, NY 10017 Phone: (212) 599-1603 Fax: (212) 599-1615
77 Belfield Road Etobicoke, Ontario M9W 1G6 Phone 9416) 241 6967 Fx (416) 241 3239

MAGNETIC PARTICLE EXAMINATION REPORT

Project: Tower 4 | Date: 10/10/2011

Owner: Tishman Construction

Contract No.: Contract # 832

FIELD.: MRP Steel Shop # 2

Acceptance Criteria (Code): ASTM E 709

Remarks:

Date	Piece Mark	Weld Identification	Interpretation		Repairs		Remarks
			Accept	Reject	Accept	Reject	
10/10/2011	1004K01						
	p3054	Fillet welds	Yes	-	None	-	
	p3008	Fillet welds	Yes	-	None	-	
	p3003	Fillet welds	Yes	-	None	-	
	p3054	Fillet welds	Yes	-	None	-	

Method of Inspection:			Equipment:		Model:
[X] Dry	[ ] Wet	[ ] Residual	Instrument:	Magnaflux	Y-7
[X] AC	[ ] DC	[ ] Half-wave	Serial No.:	43550	Spacing:
[ ] Prod	[X] Yoke	[X] Continuous	Strength of field:		

Reported to: W. Sturge

Technician: P. Pokharel

DCM ERECTORS INC.
110 East 42nd St. New York, NY 10017 Phone: (212) 599-1603 Fax: (212) 599-1615
77 Belfield Road Etobicoke, Ontario M9W 1G6 Phone 9416) 241 6967 Fx (416) 241 3239

MAGNETIC PARTICLE EXAMINATION REPORT

Project: Tower 4 | Date: 10/14/2011

Owner: Tishman Construction

Contract No.: Contract # 832

FIELD: MRP Steel Shop # 2

Acceptance Criteria (Code): ASTM E 709

Remarks: Top side of Girder

Date	Piece Mark	Weld Identification	Interpretation		Repairs		Remarks
			Accept	Reject	Accept	Reject	
10/14/2011	1002K01	(Rev. 3)					
	p3052	Fillet welds	Yes	-	None	-	
	p3047	Fillet welds	Yes	-	None	-	
	p3065	Fillet welds	Yes	-	None	-	
	p3024	Fillet welds	Yes	-	None	-	
	p3039	Fillet welds	Yes	-	None	-	
	p3022	Fillet welds	Yes	-	None	-	
	p3020	Fillet welds	Yes	-	None	-	
	p3025	Fillet welds	Yes	-	None	-	
	p3019	Fillet welds	Yes	-	None	-	
	p3041	Fillet welds	Yes	-	None	-	
	p3018	Fillet welds	Yes	-	None	-	
	p3030	Fillet welds	Yes	-	None	-	
	m4001	Fillet welds	Yes	-	None	-	
	p3012	Fillet welds	Yes	-	None	-	
	p3011	Fillet welds	Yes	-	None	-	
	p3004	Fillet welds	Yes	-	None	-	
	p3014	Fillet welds	Yes	-	None	-	

Method of Inspection:			Equipment:		Model:
[X] Dry	[ ] Wet	[ ] Residual	Instrument:	Magnaflux	Y-7
[X] AC	[ ] DC	[ ] Half-wave	Serial No.:	43550	Spacing:
[ ] Prod	[X] Yoke	[X] Continuous	Strength of field:		

Reported to: W. Sturge

Technician: P. Pokharel

DCM ERECTORS INC.
110 East 42nd St. New York, NY 10017 Phone: (212) 599-1603 Fax: (212) 599-1615
77 Belfield Road Etobicoke, Ontario M9W 1G6 Phone 9416) 241 6967 Fx (416) 241 3239

MAGNETIC PARTICLE EXAMINATION REPORT

Project Tower 4 Date 10/15/2011

Owner PA NYNJ

Contract No. 832

FIELD. MRP shop 2

Acceptance Criteria (Code) ASTM E709 AWS D1.1

Remarks: Plate Girder for crane all welds checked 100%

Date	Piece Mark	Weld Identification	Interpretation		Repairs		Remarks
			Accept	Reject	Accept	Reject	
	1001K1	m4001 to p3062	x				
		m4002 to p3062	x				
		m4002 to p3063	x				2 locations
		m4001 to p3014	x				2 locations
	Note Piece marks are used multiple locations through out assembly						

Method of Inspection:			Equipment:		Model:
[x] Dry	[ ] Wet	[ ] Residual	Instrument:	Manaflux	Y-7
[x] AC	[ ] DC	[ ] Half-wave	Serial No.:	43550	Spacing:
[ ] Prod	[x] Yoke	[x] Continuous	Strength of field:		4 to 6

Reported to: _____ Technician: Paul Lenox Level II

DCM ERECTORS INC.
110 East 42nd St. New York, NY 10017 Phone: (212) 599-1603 Fax: (212) 599-1615
77 Belfield Road Etobicoke, Ontario M9W 1G6 Phone 9416) 241 6967 Fx (416) 241 3239

REPORT OF ULTRASONIC EXAMINATION

Project:	Tower 4	Project / Job No.:	832
Client:	PANYNJ	Location:	MRP Steel, SouthPlainfield NJ, Shop # 2
Contact:		Date:	10/6/2011

TESTING PARAMETERS

Equipment Identification		Transducer		Material			
Manufacturer:	GE	Angle:		Type:	Carbon Steel	Thickness:	1" - 3/8"
Model:	USN-58L	Size:	.63X.63	Weld Joint AWS:	As per drawing		
Serial No.:	01RY8D	Mhz:	2.25	Welding Process(es):	FCAW		
Quality Requirements, Sec. No.:	AWS D 1.1 Sec. 6 ' Tabl 6.2						

WELD LOCATION AND IDENTIFICATION SKETCH

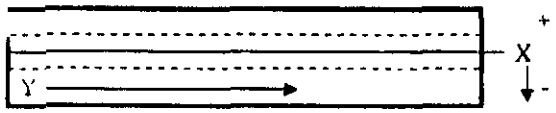

Comments: 1004K1
Crane Tower 4. Drawing 1004

GRID / ID / LOCATION	WELD JOINT	TRANSDUCER ANGLE (DEG)	FACE	Leg(s)	Decibels: Indication Level a	Decibels: Reference Level b	Decibels: Attenuation Factor c	Decibels: Indication Rating d	Discontinuity (inches): Length	Discontinuity (inches): Angular Distance (Sound Path)	Discontinuity (inches): Depth From "A" Surface	Distance: From X	Distance: From Y	Acceptable	Rejectable
	M4003-2	0	A			75%								✓	
		70	A	I/II		46								✓	
		70	B	I/II		46								✓	

Inspector: Irson Valentin
Level: II
Date: 10/6/2011

For Reference use only.

DGM ERECTORS INC.
110 East 42nd St. New York, NY 10017 Phone: (212) 599-1603 Fax: (212) 599-1615
77 Belfield Road Etobicoke, Ontario M9W 1G6 Phone (416) 241 6967 Fx (416) 241 3239

REPORT OF ULTRASONIC EXAMINATION

Project:	Tower 4	Project / Job No.:	832
Client:	PANYNJ	Location:	MRP Steel, SouthPlainfield NJ, Shop # 2
Contact:		Date:	10/6/2011

TESTING PARAMETERS

Equipment Identification		Transducer		Material			
Manufacturer:	GE	Angle:		Type:	Carbon Steel	Thickness:	1" - 3/8"
Model:	USN-58L	Size:	.63X.63	Weld Joint AWS:	As per drawing		
Serial No.:	01RY8D	Mhz:	2.25	Welding Process(es):	FCAW		
Quality Requirements. Sec. No.:	AWS D 1.1 Sec. 6 Tabl 6.2						

WELD LOCATION AND IDENTIFICATION SKETCH

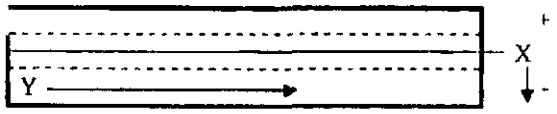

Comments: 1004K1
Crane Tower 4. Drawing 1004

GRID / ID / LOCATION	WELD JOINT	TRANSDUCER ANGLE (DEG)	FACE	Leg(s)	Decibels: Indication Level a	Decibels: Reference Level b	Decibels: Attenuation Factor c	Decibels: Indication Rating d	Discontinuity (inches): Length	Discontinuity (inches): Angular Distance (Sound Path)	Discontinuity (inches): Depth From "A" Surface	Distance: From X	Distance: From Y	Acceptable	Rejectable
	P3060	0	A			75%								✓	
		70	A	I/II		46								✓	
		70	B	I/II		46								✓	

Inspector: Irson Valentin
Level: II
Date: 10/6/2011

For Reference use only.

DCM ERECTORS INC.
110 East 42nd St. New York, NY 10017 Phone: (212) 599-1603 Fax: (212) 599-1615
77 Belfield Road Etobicoke, Ontario M9W 1G6 Phone (416) 241 6967 Fx (416) 241 3239

REPORT OF ULTRASONIC EXAMINATION

Project:	Tower 4	Project / Job No.:	832
Client:	PANYNJ	Location:	MRP Steel, SouthPlainfield NJ, Shop # 2
Contact:		Date:	10/6/2011

TESTING PARAMETERS

Equipment Identification		Transducer		Material			
Manufacturer:	GE	Angle:		Type:	Carbon Steel	Thickness:	1 - 3/8"
Model:	USN-58L	Size:	.63X.63	Weld Joint AWS:	As per drawing		
Serial No.:	01RY8D	Mhz:	2.25	Welding Process(es):	FCAW		
Quality Requirements. Sec. No.:	AWS D 1.1 Sec. 6 / Table 6.2						

WELD LOCATION AND IDENTIFICATION SKETCH

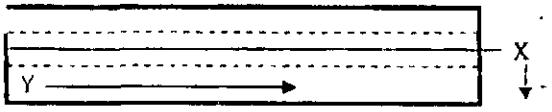

Comments: 1003K1
Crane Tower 4. Drawing 1003

GRID / ID / LOCATION	WELD JOINT	TRANSDUCER ANGLE (DEG)	FACE	Leg(s)	Decibels: Indication Level a	Decibels: Reference Level b	Decibels: Attenuation Factor c	Decibels: Indication Rating d	Discontinuity (inches): Length	Discontinuity (inches): Angular Distance (Sound Path)	Discontinuity (inches): Depth From "A" Surface	Distance: From X	Distance: From Y	Acceptable	Rejectable
	M1003-1	0	A			75%								✓	
		70	A	I/II		46								✓	
		70	B	I/II		46								✓	

Inspector: Irson Valentin
Level: II
Date: 10/6/2011

For Reference use only.

DCM ERECTORS INC.
110 East 42nd St. New York, NY 10017 Phone: (212) 599-1603 Fax: (212) 599-1615
77 Belfield Road Etobicoke, Ontario M9W 1G6 Phone 9416) 241 6967 Fx (416) 241 3239

REPORT OF ULTRASONIC EXAMINATION

Project:	Tower 4	Project / Job No.:	832
Client:	PANYNJ	Location:	MRP Steel, SouthPlainfield NJ. Shop # 2
Contact:		Date:	10/4/2011

TESTING PARAMETERS

Equipment Identification		Transducer		Material			
Manufacturer:	GE	Angle:		Type:	Carbon Steel	Thickness:	1"
Model:	USN-58L	Size:	.63X.63	Weld Joint AWS:	As per drawing		
Serial No.:	01RY8D	Mhz:	2.25	Welding Process(es):	FCAW		
Quality Requirements, Sec. No.:	AWS D 1.1 Sec. 6 / Table 6.2						

WELD LOCATION AND IDENTIFICATION SKETCH

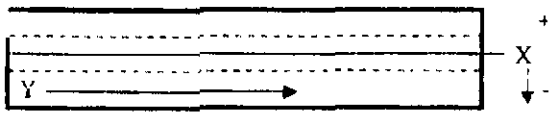

Comments:
Crane Tower 4. 1004K1

GRID / ID / LOCATION	WELD JOINT	TRANSDUCER ANGLE (DEG)	FACE	Leg(s)	Decibels: Indication Level a	Decibels: Reference Level b	Decibels: Attenuation Factor c	Decibels: Indication Rating d	Discontinuity (inches): Length	Discontinuity (inches): Angular Distance (Sound Path)	Discontinuity (inches): Depth From "A" Surface	Discontinuity (inches): Distance From X	Discontinuity (inches): Distance From Y	Acceptable	Rejectable
	P3008	0	A			75%								✓	
		70	A	I/II		46								✓	
		70	B	I/II		46								✓	

Inspector: Irson Valentin

Level: II

Date: 10/4/2011

For Reference use only.

DCM ERECTORS INC.
110 East 42nd St. New York, NY 10017 Phone: (212) 599-1603 Fax: (212) 599-1615
77 Belfield Road Etobicoke, Ontario M9W 1G6 Phone (416) 241 6967 Fx (416) 241 3239

REPORT OF ULTRASONIC EXAMINATION

Project:	Tower 4	Project / Job No.:	832
Client:	PANYNJ	Location:	MRP Steel, SouthPlainfield NJ, Shop # 2
Contact:		Date:	10/4/2011

TESTING PARAMETERS

Equipment Identification		Transducer		Material			
Manufacturer:	GE	Angle:		Type:	Carbon Steel	Thickness:	1
Model:	USN-58L	Size:	.63X.63	Weld Joint AWS:	As per drawing		
Serial No.:	01RY8D	Mhz:	2.25	Welding Process(es):	FCAW		
Quality Requirements, Sec. No.:	AWS D 1.1 Sec. 6 ' Tabl 6.2						

WELD LOCATION AND IDENTIFICATION SKETCH

Comments:
Crane Tower 4. 1004K1

GRID / ID / LOCATION	WELD JOINT	TRANSDUCER ANGLE (DEG)	FACE	Leg(s)	Decibels: Indication Level (a)	Decibels: Reference Level (b)	Decibels: Attenuation Factor (c)	Decibels: Indication Rating (d)	Discontinuity (inches): Length	Discontinuity (inches): Angular Distance (Sound Path)	Discontinuity (inches): Depth From "A" Surface	Distance: From X	Distance: From Y	Acceptable	Rejectable
	P3003	0	A			75%								✓	
		70	A	I/II		46								✓	
		70	B	I/II		46								✓	

Inspector: Irson Valentin
Level: II
Date: 10/4/2011

For Reference use only.

DCM ERECTORS INC.
110 East 42nd St. New York, NY 10017 Phone: (212) 599-1603 Fax: (212) 599-1615
77 Belfield Road Etobicoke, Ontario M9W 1G6 Phone 9416) 241 6967 Fx (416) 241 3239

REPORT OF ULTRASONIC EXAMINATION

Project:	WTC Tower 4	**Project / Job No.:**	832
Client:	PANYNJ	**Location:**	MRP Steel, SouthPlainfield NJ, Shop # 2
Contact:		**Date:**	10/6/2011

TESTING PARAMETERS

Equipment Identification		Transducer		Material			
Manufacturer:	GE Krautkramer	Angle:	70/60/45	Type:	Carbon Steel	Thickness:	1, 0.75
Model:	USN-58L	Size:	.63X.63	Weld Joint AWS:	As per drawing		
Serial No.:	01RY8D	Mhz:	2.25	Welding Process(es):	FCAW		
Quality Requirements, Sec. No.:				AWS D1.1, Sec. 6 TABLE 6.2			

WELD LOCATION AND IDENTIFICATION SKETCH

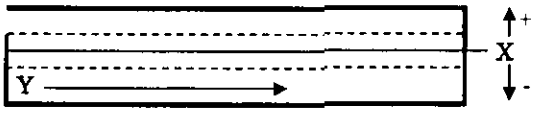

BU5 GF

Comments:

1004K1 Crane Girder

Base Metal Scanned: Yes
Accept / Reject: Accept

GRID / ID / LOCATION	WELD JOINT	TRANSDUCER ANGLE (DEG)	FACE	Leg(s)	Decibels: Indication Level a	Decibels: Reference Level b	Decibels: Attenuation Factor c	Decibels: Indication Rating d	Discontinuity (inches): Length	Discontinuity (inches): Angular Distance (Sound Path)	Discontinuity (inches): Depth From "A" Surface	Distance: From X	Distance: From Y	Acceptable	Rejectable
	(N/S)														
	p3002-2 to top flange	70	A	I/II		49								√	
	p3003 to top flange	70	A	I/II		49								√	
	Revised sec GG @ top west flange (1'3" length)														
	below assy m4003-1	70	A	I/II		49								√	
	below assy m4003-2	70	A	I/II	54	49		4	1'3"	1:541	0.527	0	0		√

The welds were MT'd prior to UT and found acceptable

Inspector: Dharam Gurnani

Level: II

Date: 10/6/2011

DCM ERECTORS INC.
110 East 42nd St. New York, NY 10017 Phone: (212) 599-1603 Fax: (212) 599-1615
77 Belfield Road Etobicoke, Ontario M9W 1G6 Phone 9416) 241 6967 Fx (416) 241 3239

REPORT OF ULTRASONIC EXAMINATION

Project:	WTC Tower 4	**Project / Job No.:**	832
Client:	PANYNJ	**Location:**	MRP Steel, SouthPlainfield NJ, Shop # 2
Contact:		**Date:**	10/5/2011

TESTING PARAMETERS

Equipment Identification		Transducer		Material			
Manufacturer:	GE Krautkramer	Angle:	70/60/45	Type:	Carbon Steel	Thickness:	1, 0.75
Model:	USN-58L	Size:	.63X.63	Weld Joint AWS:	As per drawing		
Serial No.:	01RY8D	Mhz:	2.25	Welding Process(es):	FCAW		
Quality Requirements, Sec. No.:	AWS D1.1, Sec. 6 TABLE 6.2						

WELD LOCATION AND IDENTIFICATION SKETCH

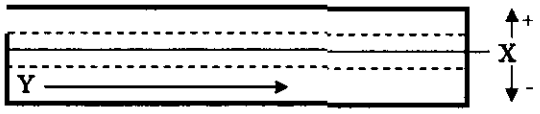

BU5 GF

Comments:

1003K1 Crane Girder

Base Metal Scanned: Yes
Accept / Reject: Accept

GRID / ID / LOCATION	WELD JOINT	TRANSDUCER ANGLE (DEG)	FACE	Leg(s)	Decibels: Indication Level a	Decibels: Reference Level b	Decibels: Attenuation Factor c	Decibels: Indication Rating d	Discontinuity (inches): Length	Discontinuity (inches): Angular Distance (Sound Path)	Discontinuity (inches): Depth From "A" Surface	Distance: From X	Distance: From Y	Acceptable	Rejectable
	(N/S)														
	p3002-1 to top west flange	70	A	I/II		49								√	
	p3003 to top west flange	70	A	I/II		49								√	
	p3001 to top west flange	70	A	I/II		49								√	
	p3002-2 to top west flange	70	A	I/II		49								√	
	Revised sec GG @ top west flange (1'3" length)														
	below assy m4003-1	70	A	I/II		49								√	
	below assy m4003-2	70	A	I/II		49								√	

The welds were MT'd prior to UT and found acceptable

Inspector: Dharam Gurnani

Level: II

Date: 10/5/2011

DCM ERECTORS INC.
110 East 42nd St. New York, NY 10017 Phone: (212) 599-1603 Fax: (212) 599-1615
77 Belfield Road Etobicoke, Ontario M9W 1G6 Phone (416) 241 6967 Fx (416) 241 3239

REPORT OF ULTRASONIC EXAMINATION

Project:	TOWER 4	**Project / Job No.:**	832
Client:	TISHMAN	**Location:**	MRP Steel, SouthPlainfield NJ, Shop # 2
Contact:		**Date:**	10/13/2011

TESTING PARAMETERS

Equipment Identification		Transducer		Material			
Manufacturer:	GE	Angle:		Type:	Carbon Steel	Thickness:	0.78
Model:	USN-58L	Size:	.63X.63	Weld Joint AWS:	Pre qualified		
Serial No.:	01RY8D	Mhz:	2.25	Welding Process(es):	FCAW		
Quality Requirements, Sec. No.:	AWS D1.1, Sec. 6 TABLE 6.2						

WELD LOCATION AND IDENTIFICATION SKETCH

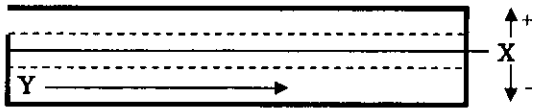

Comments:

Piece Mark: 1002 K01

Repair from UT report dated 10-12-11

GRID / ID / LOCATION	WELD JOINT	TRANSDUCER ANGLE (DEG)	FACE	Leg(s)	Decibels: Indication Level a	Decibels: Reference Level b	Decibels: Attenuation Factor c	Decibels: Indication Rating d	Discontinuity (inches): Length	Discontinuity (inches): Angular Distance (Sound Path)	Discontinuity (inches): Depth From "A" Surface	Distance: From X	Distance: From Y	Acceptable	Rejectable
	WEB(R1)	71.0	A	I/II		49			2.00			0	10.0	✓	
	WEB(R1)	71.0	A	I/II		49			2.00			0	5.0	✓	

Inspec: D. Gurnani/P. Pokharel

Level: II

Date: 10/13/2011

DCM ERECTORS INC.
110 East 42nd St. New York, NY 10017 Phone: (212) 599-1603 Fax: (212) 599-1615
77 Belfield Road Etobicoke, Ontario M9W 1G6 Phone 9416) 241 6967 Fx (416) 241 3239

REPORT OF ULTRASONIC EXAMINATION

Project:	WTC Tower 4	Project / Job No.:	832
Client:	PANYNJ	Location:	MRP Steel, SouthPlainfield NJ, Shop # 2
Contact:		Date:	10/12/2011

TESTING PARAMETERS

Equipment Identification		Transducer		Material			
Manufacturer:	GE Krautkramer	Angle:	70/60/45	Type:	Carbon Steel	Thickness:	2
Model:	USN-58L	Size:	.63X.63	Weld Joint AWS:	As per drawing		
Serial No.:	01RY8D	Mhz:	2.25	Welding Process(es):	FCAW		
Quality Requirements, Sec. No.:			AWS D1.1, Sec. 6 TABLE 6.2				

WELD LOCATION AND IDENTIFICATION SKETCH

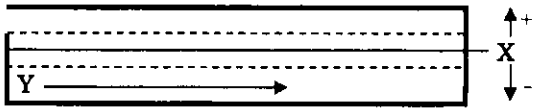

BU5 GF

Comments:

1003K1 Crane Girder

Base Metal Scanned: Yes
Accept / Reject: Accept

GRID / ID / LOCATION	WELD JOINT	TRANSDUCER ANGLE (DEG)	FACE	Leg(s)	Decibels: Indication Level a	Decibels: Reference Level b	Decibels: Attenuation Factor c	Decibels: Indication Rating d	Discontinuity (inches): Length	Discontinuity (inches): Angular Distance (Sound Path)	Discontinuity (inches): Depth From "A" Surface	Distance: From X	Distance: From Y	Acceptable	Rejectable
	2 hole pluged @	70	A	I		49								√	
	bottom flange East end														
	2 hole pluged @	70	A	I		49								√	
	bottom flange West end														

The welds were MT'd prior to UT and found acceptable

Inspector: Dharam Gurnani

Level: II

Date: 10/12/2011

DCM ERECTORS INC.
110 East 42nd St. New York, NY 10017 Phone: (212) 599-1603 Fax: (212) 599-1615
77 Belfield Road Etobicoke, Ontario M9W 1G6 Phone 9416) 241 6967 Fx (416) 241 3239

REPORT OF ULTRASONIC EXAMINATION

Project:	WTC Tower 4	**Project / Job No.:**	832
Client:	PANYNJ	**Location:**	MRP Steel, SouthPlainfield NJ, Shop # 2
Contact:		**Date:**	10/12/2011

TESTING PARAMETERS

Equipment Identification		Transducer		Material			
Manufacturer:	GE Krautkramer	Angle:	70/60/45	Type:	Carbon Steel	Thickness:	2
Model:	USN-58L	Size:	.63X.63	Weld Joint AWS:	As per drawing		
Serial No.:	01RY8D	Mhz:	2.25	Welding Process(es):	FCAW		
Quality Requirements, Sec. No.:			AWS D1.1, Sec. 6 TABLE 6.2				

WELD LOCATION AND IDENTIFICATION SKETCH

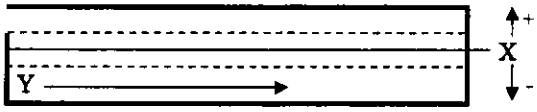

BU5 GF

Comments:

1004K1 Crane Girder

Base Metal Scanned: Yes
Accept / Reject: Accept

GRID / ID / LOCATION	WELD JOINT	TRANSDUCER ANGLE (DEG)	FACE	Leg(s)	Decibels: Indication Level a	Decibels: Reference Level b	Decibels: Attenuation Factor c	Decibels: Indication Rating d	Discontinuity (inches): Length	Discontinuity (inches): Angular Distance (Sound Path)	Discontinuity (inches): Depth From "A" Surface	Distance: From X	Distance: From Y	Acceptable	Rejectable
	1 hole pluged @	70	A	I		49								√	
	Top flange East end														

The welds were MT'd prior to UT and found acceptable

Inspector: Dharam Gurnani

Level: II

Date: 10/12/2011

DCM ERECTORS INC.
110 East 42nd St. New York, NY 10017 Phone: (212) 599-1603 Fax: (212) 599-1615
77 Belfield Road Etobicoke, Ontario M9W 1G6 Phone 9416) 241 6967 Fx (416) 241 3239

REPORT OF ULTRASONIC EXAMINATION

Project:	WTC Tower 4	**Project / Job No.:**	832
Client:	PANYNJ	**Location:**	MRP Steel, SouthPlainfield NJ, Shop # 2
Contact:		**Date:**	10/6/2011

TESTING PARAMETERS

Equipment Identification		Transducer		Material			
Manufacturer:	GE Krautkramer	Angle:	70/60/45	Type:	Carbon Steel	Thickness:	1
Model:	USN-58L	Size:	.63X.63	Weld Joint AWS:	As per drawing		
Serial No.:	01RY8D	Mhz:	2.25	Welding Process(es):	FCAW		
Quality Requirements, Sec. No.:			AWS D1.1, Sec. 6 TABLE 6.2				

WELD LOCATION AND IDENTIFICATION SKETCH

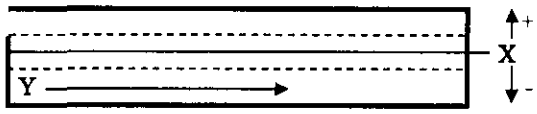

BU5 GF

Comments:

1003K1 Crane Girder

Base Metal Scanned: Yes
Accept / Reject: Accept

GRID / ID / LOCATION	WELD JOINT	TRANSDUCER ANGLE (DEG)	FACE	Leg(s)	Decibels: Indication Level a	Decibels: Reference Level b	Decibels: Attenuation Factor c	Decibels: Indication Rating d	Discontinuity (inches): Length	Discontinuity (inches): Angular Distance (Sound Path)	Discontinuity (inches): Depth From "A" Surface	Distance: From X	Distance: From Y	Acceptable	Rejectable
	(F/S)														
	p3002-1 to top west flange	70	A	I/II		49								√	
	p3003 to top west flange	70	A	I/II		49								√	
	p3001 to top west flange	70	A	I/II		49								√	
	p3002-2 to top west flange	70	A	I/II		49								√	

The welds were MT'd prior to UT and found acceptable

Inspector: Dharam Gurnani

Level: II

Date: 10/6/2011

DCM ERECTORS INC.
110 East 42nd St. New York, NY 10017 Phone: (212) 599-1603 Fax: (212) 599-1615
77 Belfield Road Etobicoke, Ontario M9W 1G6 Phone 9416) 241 6967 Fx (416) 241 3239

REPORT OF ULTRASONIC EXAMINATION

Project:	WTC Tower 4	**Project / Job No.:**	832
Client:	PANYNJ	**Location:**	MRP Steel, SouthPlainfield NJ, Shop # 2
Contact:		**Date:**	10/10/2011

TESTING PARAMETERS

Equipment Identification		Transducer		Material			
Manufacturer:	GE Krautkramer	Angle:	70/60/45	Type:	Carbon Steel	Thickness:	1, 0.5
Model:	USN-58L	Size:	.63X.63	Weld Joint AWS:	As per drawing		
Serial No.:	01RY8D	Mhz:	2.25	Welding Process(es):	FCAW		
Quality Requirements, Sec. No.:	AWS D1.1, Sec. 6 TABLE 6.2						

WELD LOCATION AND IDENTIFICATION SKETCH

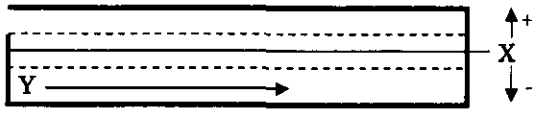

BU5 GF

Comments:

1004K1 Crane Girder

Base Metal Scanned: Yes
Accept / Reject: Accept

GRID / ID / LOCATION	WELD JOINT	TRANSDUCER ANGLE (DEG)	FACE	Leg(s)	Decibels: Indication Level (a)	Decibels: Reference Level (b)	Decibels: Attenuation Factor (c)	Decibels: Indication Rating (d)	Discontinuity (inches): Length	Discontinuity (inches): Angular Distance (Sound Path)	Discontinuity (inches): Depth From "A" Surface	Distance: From X	Distance: From Y	Acceptable	Rejectable
	m4003 East to top flange														
	Top	70	A	I/II		49								√	
	Bottom	70	A	I/II		49								√	
	web	70	A	I/II		49								√	

The welds were MT'd prior to UT and found acceptable

Inspector: Dharam Gurnani

Level: II

Date: 10/10/2011

Federated Crane Co., L.L.C.

1640 New Market Avenue, South Plainfield, NJ 07080
Engineering Office:
Phone: (585) 381-1663
Fax: (585) 381-5336
Email: tkanzler@rochester.rr.com

January 19, 2012

New York City Department of Buildings
Cranes and Derricks Division
280 Broadway
New York, NY 10007

Attn: Delia Shumway, PE
Executive Director

Re: FMC Link-Belt TG-1900 with standard winch (CD3705)
Hydraulic Field Test Protocol

Dear Ms. Shumway:

Included below is the test protocol for the subject tower crane we discussed during yesterday's phone conference. It is being transmitted for discussion purposes, and as such, formatting for field use has not yet been addressed. We therefore reserve the right to revise as necessary at a later date.

If you have any questions, please do not hesitate to call.

Sincerely,

Thomas Kanzler, P.E.
Chief Engineer

cc: M. Schiavoni
L. Shapiro

FMC Link-Belt TG-1900
Hydraulic System Field Testing Protocol
V1.0 1/19/2012

Charge Pressures

Main Hoist

Engine at speed
Air controls switch enabled
Main/Aux Hoist selector switch to "Main"
Main Hoist Drum Speed Selector Switch to "Low"
At HPU - Verify charge pressure (at pressure switch) is at or above 200 psi _____
Rotate drum in either direction
At cooling shuttle manifold - verify charge pressure (while drum is rotating) is at or above 160 psi _____
Stop drum
Turn gauge isolator valve to relieve charge pressure switch
Verify main air valve disables operator controls _____
Restore gauge isolator valve to run position

Auxiliary Hoist

Engine at speed
Air controls switch enabled
Main/Aux Hoist selector switch to "Aux"
Aux Hoist Drum Speed Selector Switch to "Low"
At HPU - Verify charge pressure (at pressure switch) is at or above 200 psi _____
Rotate drum in either direction
At cooling shuttle manifold - verify charge pressure (while drum is rotating) is at or above 160 psi _____
Stop drum
Turn gauge isolator valve to relieve charge pressure switch
Verify main air valve disables operator controls _____
Restore gauge isolator valve to run position

continued next page

Boom Hoist

Engine at speed
Air controls switch enabled
At HPU - Verify charge pressure (at pressure switch) is at or above 200 psi _____
Rotate drum in either direction
At cooling shuttle manifold - verify charge pressure (while drum is rotating) is at or above 160 psi _____
Stop drum
Turn gauge isolator valve to relieve charge pressure switch
Verify main air valve disables operator controls _____
Restore gauge isolator valve to run position
Operate drum in either direction
Verify boom ratchet pawl retracts and resets when drum is started and stopped _____
Operate drum in opposite direction
Verify boom ratchet pawl retracts and resets when drum is started and stopped _____

Slewing

Engine at speed
Air controls switch enabled
At HPU - Verify charge pressure (at pressure switch) is at or above 200 psi _____
Verify swing brake is engaged
Operate swing in either direction only enough to pressurize working circuit (audible pump whine)
At cooling shuttle manifold - verify charge pressure is at or above 160 psi _____

Operator's Cab Indicators

Engine at speed
Verify red "Charge Pressure" indicator on operator's console is NOT lit _____
Enable Air Controls Switch on operator's console
Verify green "Air Control" Indicator on operator's console IS lit _____
Turn gauge isolator valve to relieve charge pressure switch (at any hoist function)
Verify red "Charge Pressure" indicator on operator's console IS lit _____
Verify green "Air Control" indicator is NOT lit _____

Hoist Motor Case Flows

Main Hoist

Engine at speed
Air controls switch enabled
Main/Aux Hoist selector switch to "Main"
Main Hoist Drum Speed Selector Switch to "Low"
Option 1: Hoist load of approximately 40,000 lb
Verify case flow rate from each motor while hoisting is less than 2.5 gpm _____
Option 2: Hoist load of approximately 55,000 lb
Verify case flow rate from each motor while hoisting is less than 3.6 gpm _____

Auxiliary Hoist

Engine at speed
Air controls switch enabled
Main/Aux Hoist selector switch to "Aux"
Auxiliary Hoist Drum Speed Selector Switch to "Low"
Hoist load greater than 10,000 lb
Verify case flow rate from motor is less than 3.0 gpm _____

Boom Hoist

Engine at speed
Air controls switch enabled
Empty hook
Boom down to max radius
Raise boom (drum must be turning – speed not relevant)
Verify case flow rate from motor is no greater than 0.4 gpm _____

Intermediate/High Speed Lockout

Main Hoist

Engine at 1000-1100 rpm (full speed acceptable, but not necessary)
Air controls enabled
Main Hoist Drum Speed Switch set to "High"
Hoist empty hook at full speed (reduced engine speed)
Simulate hook load of 14,000-14,500 lb at LMI
Verify audible drum speed reduction _____
Simulate hook load of 36,000-36,500 lb at LMI
Verify further audible drum speed reduction _____

Auxiliary Hoist

Engine OFF
Disconnect Aux. Hoist pressure switch hydraulic line, cap/plug open port
Connect Aux. Hoist pressure switch to portable hand-operated hydraulic pump
Engine at 1000-1100 rpm (full speed acceptable, but not necessary)
Air controls enabled
Auxiliary Hoist Drum Speed Switch set to "High"
Hoist empty hook at full speed (reduced engine speed)
Pressurize Aux. Hoist pressure switch (slowly) to 1500 psi (falling)
Verify audible drum speed reduction with no higher than 1500 psi at pressure switch _____
Engine OFF
Reconnect Aux. Hoist pressure switch hydraulic line

Boom Limits

Engine at speed
Boom up to load chart minimum load radius
Verify LMI stops boom up function at chart minimum load radius _____
Override LMI boom minimum load radius cutout
Boom up until pneumatic boom hoist up limit activates *Do Not Allow Boom to Contact Backstops*
Verify pneumatic boom hoist up limit functionality _____
Boom down to load chart maximum load radius
Verify LMI stops boom down function at chart maximum load radius _____

Anti-Two Block System

Main Hoist

Engine at speed
Raise main hook slowly to activate anti-two block system
Verify main hoist up is disabled when activated _____

Auxiliary Hoist

Engine at speed
Raise auxiliary hook slowly to activate anti-two block system
Verify auxiliary hoist up is disabled when activated _____
Verify boom hoist down is disabled _____

WORLD TRADE CENTER - TOWER FOUR
NEW YORK, NY

TOWER CRANE INSTALLATIONS

FOR

DCM ERECTORS INC.

DCM PROJECT REF. 843

CRANE 2A
FMC TG1900 S/N 76G9-1206C
NYC CD No. 3705

LOAD TEST PROCEDURE

NY PERMIT LP368

Prepared by: J. Jurimae

LICENSED PROFESSIONAL ENGINEER
J. JURIMAE
PROVINCE OF ONTARIO

Issue R0 - 11/28/11

(7 SHEETS)

Ex-1

THE STATE EDUCATION DEPARTMENT / THE UNIVERSITY OF THE STATE OF NEW YORK / ALBANY, NY 12234

State Board for Engineering and Land Surveying, Education Building, 89 Washington Avenue, 2nd Floor Mezzanine-East Wing
Tel. (518) 474-3817, Ext. 140
Fax (518) 473-6282
E-mail: enginbd@mail.nysed.gov
E-mail: lsurvbd@mail.nysed.gov

LIMITED PERMIT TO PRACTICE PROFESSIONAL ENGINEERING

This permit shall entitle the holder to practice Professional Engineering in New York but only in connection with the specific project listed below:

Permit Number: 000368 - RENEWAL	**Issued To:** **Jaak Jurimae**
Permit Issue Date: October 8, 2011	
Expiration Date: October 7, 2014	

This is to certify that

JAAK JURIMAE

having applied for a limited permit to practice professional engineering in the State of New York and having submitted satisfactory evidence of established and recognized professional standing in the **Province of Ontario and holds license number 22696017**, and the State Board for Professional Engineering having recommended the issuance of such limited permit; therefore, in accordance with the provisions of Section 7207, subdivision 1, of the Education Law, the said **Jaak Jurimae** is hereby granted this limited permit to practice professional engineering in this state but only in connection with a specific project, viz., **Tower Four – World Trade Center, New York, New York** and is authorized to file plans, specifications, and reports using his **Province of Ontario seal**, as provided in Section 7209 of the Education Law. A copy of this permit shall accompany all documents filed with building officials or others in conjunction with this project.

Jane W. Blair, PE
Executive Secretary

Non-transferable
Valid only for project listed above

Professional Engineers must register triennially with the department to practice the profession in New York State. Limited permit holders whose projects may take longer to complete than the three-year registration period must renew their NYS registration to practice the profession in New York State.

CRANE 2A	LOAD TEST WEIGHTS.

TEST #1 - MAX LIFTED LOAD (RADIUS < 80 FT)
(100% FOR ALARM, 110% CUT-OUT)
FMC TG1900 W/ 160 FT + CLIMBING FRAME
SINGLE-PART LINE MAX LIFTED LOAD . 57200#

DEDUCTS: - HOOK BLOCK ~ 1500#
800 FT HOIST. LINE TO GRADE ~ 3700#
5200# (5200#)

NET MAX LIFTED TIP LOAD. ~ 52000#

TEST WEIGHTS: C = 11940#
D ~ 14080#
F = 25440#
51440# + RIGGING ≈ 52000#
FOR 100% CAPACITY

FOR 110% OF MAX LIFTED LOAD
ADD TEST WEIGHT G = 6,880#
TOTAL ≈ 63240# ≈ 1.10 x CAPACITY

TEST #2 - LOAD MOMENT
(100% FOR ALARM, 110% CUT-OUT)
W/ TEST WEIGHTS C, D + F + HOOK BLOCK + CABLE
+ RIGGING ≈ 57200#
CHART CAPACITY @ 90 FT RADIUS ~ 57000# ≈ 57200
FOR 100% CAP.
INTERPOLATED CHART CAPACITY @ 98 FT RADIUS ≈ 51600#
≈ 110% OF CHART CAPACITY W/
57200# TIP LOAD

PROJECT	CLIENT	
NTC4		BY JJ DATE 11-28-11
		CK ____ DATE ____
		RV ____ DATE ____
KAJ ENGINEERS INC.	CONSULTING ENGINEERS TORONTO, CANADA	PROJECT NO. 8794
		PART ____ SHEET 1 OF 1

FMC

General Specifications

Link-Belt® 115-ton *(104.31 metric ton)*
Tower/gantry crane

TG-1900

Equipment Sales & Service (1988) Limited
1930 Bonhill Drive Reed Reading, Ontario M5W 4W3
(416) 363-8141 Telex 06-989273
BRANCHES: Ottawa • Sudbury • Calgary • Edmonton
Sparwood, B.C.

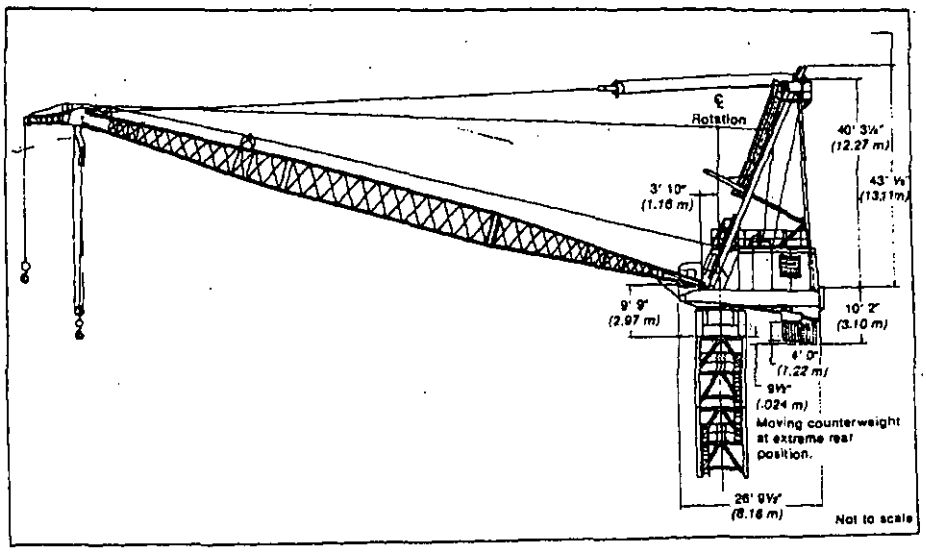

General dimensions	Feet	meters
Basic boom length	80' 0"	24.38
Maximum boom length	200' 0"	60.96
Length, optional boom tip extension	10' 0"	3.05
Tailswing	20' 10"	9.15
Over-all width, revolving upperstructure	13' 4"	4.06

TG-1900 lifting crane capacities — with climbing frame

Refer to Notes page 15.

Boom				Load radius②		Capacities — Main boom only①							
	Angle	Boom point height③				4-part hoist line		3-part hoist line		2-part hoist line		1-part hoist line	
Length	Degree	Feet	meters	Feet	meters	Pounds	Kilograms	Pounds	Kilograms	Pounds	Kilograms	Pounds	Kilograms
160' (48.77 m)	84.2	168' 11"	51.46	20	6.10					114,400	51 890		
	82.4	168' 4"	51.30	25	7.62					↑	↑	57,300	25 946
	80.6	167' 7"	51.07	30	9.14							↑	↑
	78.8	166' 8"	50.79	35	10.67	154,500	70 080	165,900	75 297				
	76.9	165' 7"	50.47	40	12.19	135,400	61 415	136,100	61 733	114,400	51 890		
	73.2	162' 11"	49.65	50	15.24	107,800	48 908	108,500	49 194	109,000	49 441		
	69.4	159' 6"	48.62	60	18.29	88,300	40 052	89,000	40 369	89,700	40 687		
	65.6	156' 3"	47.58	70	21.34	74,300	33 696	74,900	33 974	75,600	34 291		
	61.8	152' 8"	46.54	80	24.38	63,800	28 933	64,100	29 075	64,800	29 392	57,200	25 945
	57.4	144' 8"	44.09	90	27.43	55,000	24 947	55,700	25 265	56,300	25 537	57,000	25 854
	52.9	137' 7"	41.83	100	30.48	48,300	21 908	48,900	22 180	49,500	22 452	50,200	22 770
	48.4	129' 5"	39.44	110	33.53	43,300	19 413	43,400	19 685	44,000	19 958	44,600	20 230
	43.4	119' 8"	36.49	120	36.58	38,300	17 372	38,800	17 599	39,400	17 871	39,800	18 098
	37.9	108' 1"	32.94	130	39.62	34,600	15 694	35,100	15 921	35,600	16 103	36,000	16 329
	31.6	93' 8"	28.58	140	42.67	30,900	14 016	31,400	14 242	31,800	14 424	32,200	14 606
	24.0	74' 9"	22.77	150	45.72	27,900	12 656	28,300	12 791	28,600	12 927	28,900	13 108
	12.8	44' 4"	13.52	160	48.77	22,300	10 116	22,600	10 251	22,900	10 387	23,700	10 750
170'④ (51.82 m)	84.5	178' 11"	54.54	20	6.10					114,300	51 845		
	82.9	178' 8"	54.37	25	7.62					↑	↑	57,100	25 900
	81.1	177' 8"	54.16	30	9.14							↑	↑
	79.4	176' 10"	53.90	35	10.67	152,400	69 127	153,300	69 535				
	77.7	175' 10"	53.59	40	12.19	133,800	60 664	134,300	60 917	114,300	51 845		
	74.2	173' 4"	52.83	50	15.24	106,600	48 360	106,600	48 352	107,400	48 715		
	70.7	170' 2"	51.87	60	18.29	86,700	39 326	87,600	39 689	88,300	40 006		
	67.1	166' 4"	50.68	70	21.34	72,700	32 976	73,400	33 293	74,200	33 656		
	63.4	161' 9"	49.29	80	24.38	62,000	28 122	62,700	28 440	63,400	28 757	57,100	25 900
	59.6	156' 3"	47.62	90	27.43	53,800	24 312	54,300	24 630	55,000	24 947	55,700	25 265
	55.5	149' 11"	45.68	100	30.48	46,900	21 273	47,600	21 591	48,200	21 863	48,800	22 180
	51.2	142' 8"	43.42	110	33.53	41,400	18 779	42,000	19 050	42,700	19 368	43,300	19 640
	46.9	133' 10"	40.78	120	36.58	36,800	16 737	37,800	17 009	38,100	17 281	38,700	17 554
	42.1	123' 7"	37.68	130	39.62	33,100	15 013	33,700	15 286	34,300	15 512	34,900	15 785
	36.8	111' 8"	33.97	140	42.67	29,700	13 471	30,300	13 698	30,700	13 925	31,200	14 152
	30.7	98' 8"	29.40	150	45.72	26,800	12 065	27,000	12 246	27,400	12 428	27,800	12 609
	23.2	76' 10"	23.41	160	48.77	24,000	10 886	24,300	11 022	24,600	11 158	25,000	11 339
	12.1	46' 8"	13.86	170	51.82	19,000	8 618	19,200	8 709	19,600	8 890	20,300	9 162
180'④ (54.86 m)	84.8	188' 0"	57.60	20	6.10					114,200	51 800		
	83.2	188' 6"	57.45	25	7.62					↑	↑	57,100	25 900
	81.6	187' 10"	57.24	30	9.14							↑	↑
	80.0	187' 0"	57.00	35	10.67	150,400	68 220	151,200	68 583				
	78.4	186' 1"	56.71	40	12.19	131,800	59 693	132,400	60 056	114,200	51 800		
	75.1	183' 8"	55.99	50	15.24	104,100	47 218	104,900	47 581	105,500	47 860		
	71.8	180' 8"	55.08	60	18.29	85,100	38 600	85,900	38 963	86,700	39 326		
	68.4	177' 1"	53.98	70	21.34	71,100	32 250	71,800	32 613	72,700	32 976		
	65.0	172' 10"	52.67	80	24.38	60,800	27 442	61,300	27 805	62,100	28 168	57,100	25 900
	61.4	167' 9"	51.13	90	27.43	52,300	23 677	52,900	23 996	53,700	24 357	54,400	24 675
	57.7	161' 10"	49.33	100	30.48	45,800	20 638	46,300	20 864	46,900	21 273	47,700	21 636
	53.8	156' 1"	47.56	110	33.53	40,000	18 143	40,700	18 461	41,400	18 778	42,100	19 096
	49.8	147' 2"	44.86	120	36.58	35,800	16 102	36,100	16 374	36,800	16 692	37,400	16 964
	45.6	138' 1"	42.08	130	39.62	31,700	14 379	32,300	14 651	32,900	14 923	33,600	15 195
	40.8	127' 8"	38.83	140	42.67	28,500	12 927	29,100	13 199	29,600	13 426	30,200	13 698
	36.7	114' 9"	34.96	150	45.72	25,300	11 475	25,800	11 702	26,300	11 929	26,800	12 201
	29.6	99' 2"	30.22	160	48.77	22,600	10 251	23,100	10 477	23,600	10 705	23,800	10 840
	22.6	78' 10"	24.03	170	51.82	20,400	9 253	20,700	9 389	21,100	9 570	21,400	9 706
	11.0	46' 6"	14.17	180	54.86	16,000	7 257	16,200	7 348	16,600	7 484	17,100	7 756

(continued)

④Consult manufacturer for boom lengths greater than 170' (51.82 m).
①Load handles off main boom head sheaves with 10' (3.05 m) boom tip extension mounted on boom.
②Measured vertically from center of boom head sheave to base of turntable bearing mounting.
③Measured from center of tower base section to center of gravity of freely suspended load.

TG-1900 lifting crane notes for crane mounted on a 9' 9" x 9' 9" (2.97 x 2.97 m) tower with or without climbing frame, pedestal, or on a bogie or gantry.

General notes:

1. Loads shown are in pounds and in all cases are limited by strength capabilities of the machine. Proper design of the substructure to withstand the loadings imposed by the machine shall be the responsibility of the purchaser. A deduction must be made from these capacities for weight of load handling equipment such as hook block, hook, sling, grapple, load weighing devices, etc.

2. The operator must make the following considerations when operating the crane:
   a. Make certain the actual load operating radius is the same as the radius specified on the capacity chart. The load radius is measured from the center of the tower base section to the center of gravity of the freely suspended load. The user must make allowances for increases in the load radius caused by stretching of the boom suspension and deflection of the boom and tower.
   b. Prevent shock or impact loading of the crane's structure especially when operating during low temperatures.
   c. Effect of wind on loads with large surface areas.

3. Do not lift a load with a single part of main hoist line at boom angles greater than 84.0°.

4. Do not lift a load on the 10' (3.05 m) boom tip extension when the main hook is in use.

5. For each 10 feet (3.05 m) of boom foot height above the lowest hook position, the following deductions must be made from these lifting capacities:
   192# (87 kg) when using 4 parts of main hoist line
   144# (65 kg) when using 3 parts of main hoist line
   96# (44 kg) when using 2 parts of main hoist line
   48# (22 kg) when using 1 part of main hoist line

6. If the 10' (3.05 m) boom tip extension is not attached to the boom, 2,400 pounds (1 089 kg) may be added to the main hoist lifting capacities but must not exceed the maximum rated capacity for the number of parts of line being used.

7. The boom hanger block is not required when using one part or two parts of main hoist line. If the hanger block is removed when using one part or two parts of main hoist line, 1,800 pounds (816 kg) may be added to these main hoist capacities but must not exceed the maximum rated capacity for the number of parts of line being used.

8. These capacities are based on a 30 m.p.h. (48.27 km/h) wind in the operating condition, and a hook load reduction must be made when winds exceed 30 m.p.h. (48.27 km/h).

9. If the machine is swung 360° in the nonoperating condition, the machine, reeving, and hook blocks must clear any obstacles with the boom stowed at its specified position. This precaution is necessary due to the weathervane rotation of the crane by the wind.

10. These capacities apply only to the machine as originally manufactured and normally equipped by FMC Corporation, Cable Crane and Excavator Division.

Tower mounted with climbing frame

Notes:

1. The maximum free standing tower height with a climbing frame is 162' 7½" (49.57 m) for boom lengths 80' (24.38 m) through 170' (51.82 m). For boom lengths greater than 170' (51.82 m) and for tower heights greater than 162' 7½" (49.57 m), consult manufacturer for additional requirements for the crane.

2. When the crane is in the non-operating condition, the boom must be stowed to conform to one of the following conditions:

Boom length	Condition
80' - 160' (24.38 - 48.77 m)	Stow boom at maximum rated radius
170' (51.82 m)	Stow boom at horizontal position

Tower mounted without climbing frame

Notes:

1. The maximum free standing tower height without a climbing frame is 162' 7½" (49.57 m) for boom lengths 80' (24.38 m) through 200' (60.96 m). For tower heights greater than 162' 7½" (49.57 m), consult manufacturer for additional requirements for the crane.

2. When the crane is in the non-operating condition, the boom must be stowed to conform to one of the following conditions:

Boom length	Condition
80' - 160' (24.38 - 48.77 m)	Stow boom between a 60° boom angle and maximum rated radius
170' - 190' (51.82 - 57.91 m)	Stow boom at maximum rated radius
200' (60.96 m)	Stow boom at horizontal position

Pedestal, bogie or gantry mounted

Notes:

1. Lifting capacities shown are not more than 85% of the tipping loads calculated under static conditions with the boom in the least stable direction. The user must take into account the dynamic effects of hoisting, lowering, booming, swinging, and traveling. Additional factors to be considered are freely suspended loads, track, wind or ground conditions, boom length and proper operating speeds for the existing conditions.

2. The operator must make certain the actual load operating radius is the same as the radius specified on the capacity chart. The load radius is measured from the center of the traveling base to the center of gravity of the freely suspended load. The user must make allowances for increases in the load radius caused by stretching of boom suspension and deflection of the boom and traveling base.

3. For these lifting capacities, the user must make certain that all specified ballast is properly assembled to the traveling base. Ballast may be necessary to meet stability requirement as specified on working areas and ballast requirement plate.

4. Use caution when approaching rail stops with crane bumpers. Excessive rate of contact can result in crane's instability and/or failure of rail stops

5. When the crane is in the non-operating condition, the rail mounted traveling base must be secured with rail clamps or tie downs to prevent drifting.

We are constantly improving our products and therefore reserve the right to change designs and specifications.

DCM Erectors, Inc.
110 East 42nd Street - 1704, New York, NY 10017, Phone: (212) 599-1603, Fax: (212) 599-1618
77 Belfield Road, Etobicoke, ON, M9W 1E8, Phone: (416) 241-6967, Fax: (416) 3239

Certified Test Weight Schedule

				Weight	Date Certified
Pc	A	TEST WEIGHT BOX	A1	28,580	3/6/2009
Pc	B	Short Beam	B1	16,000	4/3/2009
Pc	C	Long Beam	C1	11,940	4/3/2009
Pc	D	Short Beam	D1	14,060	3/6/2009
Pc	E	Long Beam	E1	25,420	4/3/2009
Pc	F	Long Beam	F1	25,440	3/6/2009
Pc	G	Short Beam	G1	6,600	3/6/2009
Pc	H	Long Beam	H1	25,420	4/3/2009

LERA

Leslie E. Robertson Associates, R.L.L.P
Consulting Structural Engineers

30 Broad Street, 47th Floor
New York, NY 10004-2304

Tel: (212) 750-9000
Fax: (212) 750-9002
http://www.lera.com

William J. Faschan
Partner
william.faschan@lera.com

10 January 2012
File: P414

Mr. Scott Thompson
Construction Executive
World Trade Center Properties, LLC
250 Greenwich St, 38th Floor
New York, NY 10007
Via e-mail: SThompson@Silvprop.com

RE: Tower 4, DCM Crane 2 Dismantling

Dear Mr. Thompson,

The following submittals were received by this office for review of loads imposed on base building structure by Crane 2 dismantling as stated in the submitted documents:

Package No. 03300-021.0: Crane Shop Drawings

Transmittal No. T4-16335

Item no. LE-27.01 Rev. 0 Dismantling Crane 2 Using Crane 1 & 2A 12/05/11 as "Make Corrections Noted, Resubmission Not Required".

Item no. LE-27.03 Rev. 0 Dismantling Crane 2 Machinery Using Crane 1 12/05/11 as "Make Corrections Noted, Resubmission Not Required".

Item no. LE-27.04 Rev. 0 Dismantling Crane 2 Using Crane 2A 12/06/11 as "Make Corrections Noted, Resubmission Not Required".

Item no. LE-27.05 Rev. 0 Dismantling Crane 2 Using Crane 2A 12/06/11 as "Make Corrections Noted, Resubmission Not Required".

Item no. LE-27.06 Rev. 0 Dismantling Crane 2 Using Crane 2A 12/06/11 as "Make Corrections Noted, Resubmission Not Required".

Item no. LE-27.07 Rev. 0 Dismantling Crane 2 Using Crane 2A 12/07/11 as "Make Corrections Noted, Resubmission Not Required".

Item no. LE-27.08 Rev. 0 Dismantling Crane 2 Using Crane 2A 12/07/11 as "Make Corrections Noted, Resubmission Not Required".

Item no. LE-27.09 Rev. 0 Dismantling Crane 2 Using Crane 2A 12/08/11 as "Make Corrections Noted, Resubmission Not Required".

Item no. LP-43.0 Rev. 0 Dismantling Crane 2 using Crane 1 &2A 12/15/11 as "Make Corrections Noted, Resubmission Not Required".

Transmittal No. T4-16428

Item no. 46449 Rev. 0 Crane 2 Dismantling Calculations for LE-27.6 as "Make Corrections Noted, Resubmission Not Required".

Item no. LE-27.02 Rev. 1 Dismantling Crane 2 Boom using Crane 1 01/04/12 as "Make Corrections Noted, Resubmission Not Required".

Item no. LP-43.1 Rev. 1 Dismantling Crane 2 Boom Lay Down Location 01/05/12 as "Make Corrections Noted, Resubmission Not Required".

The submittals above were reviewed only for capability of the permanent base building Tower 4 structure, as designed by our office, to sustain loads imposed as shown on these submittals. The loads provided were signed and sealed by the Contractor's engineer Grigoriy Vidgop PE (New York State License No. 079380). We have found these submittals to be consistent with the requirements of our specification and concur that the permanent base building structure can sustain the loads indicated. We have returned the submittals with comments, however do not require resubmission.

Note that our review of Contractor's submittal does not relieve Contractor from full responsibility for Contractor's means and methods. Our review was specifically limited to capabilities of the permanent structure and does not warrant as to the correctness of the load data furnished, adequacy of equipment and/or its components, or methods, means and techniques of its use.

Sincerely,
LESLIE E. ROBERTSON ASSOCIATES, R.L.L.P

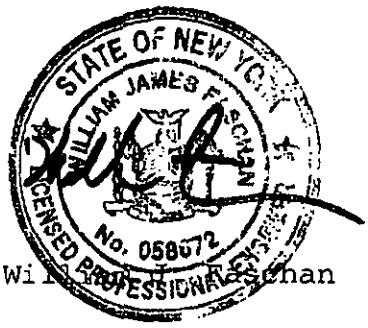

William J. Fischan

WJF/mal

Cc: Dave Marshall, Tishman, by e-mail: DMarshall@Tishman.com
Theodore Carpinelli, Tishman, by e-mail: TCarpinelli@Tishman.com
Tyler Troast, Tishman, by e-mail: TTroast@Tishman.com

CATERPILLAR®

Industrial Engine
328-444 bkW/
440-595 bhp

C15 ACERT®

1800-2100 rpm

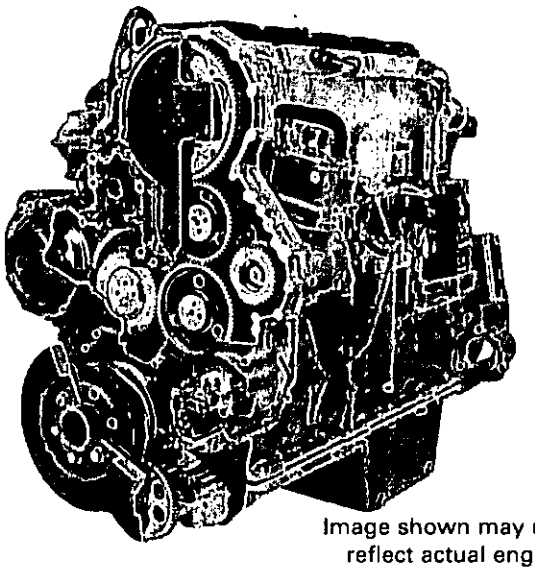

Image shown may not reflect actual engine

CATERPILLAR® ENGINE SPECIFICATIONS

I-6, 4-Stroke-Cycle Diesel	
Bore (mm, in)	137 mm, 5.39 in.
Stroke (mm, in)	171 mm, 6.73 in.
Displacement	15.2 liters, 923 cu.in.
Aspiration	Turbocharged/ATAAC
Compression Ratio	18:1
Rotation (from flywheel end)	Counterclockwise
Weight, Net Dry (approximate kg, lb)	1332 kg, 2937 lb.

FEATURES

Emissions

Meets Tier 3, Stage IIIA emission requirements. Tier 3 refers to EPA (U.S.) standards. Stage IIIA refers to European standards.

Worldwide Supplier Capability

Caterpillar
- Casts engine blocks, heads, and cylinder liners
- Machines critical components
- Assembles complete engine

Ownership of these manufacturing processes enables Caterpillar to produce high quality, dependable product.

Factory-designed systems built at Caterpillar ISO 9001:2000 certified facilities.

Testing

Prototype testing on every model:
- proves computer design
- verifies system torsional stability
- tests functionality on every model

Every Caterpillar engine is dynamometer tested under full load to ensure proper engine performance.

Full Range of Attachments

Wide range of bolt-on system expansion attachments, factory designed and tested

Unmatched Product Support Offered Through Worldwide Caterpillar Dealer Network

More than 1,500 dealer outlets

Caterpillar factory-trained dealer technicians service every aspect of your industrial engine

99.7% of parts orders filled within 24 hours worldwide

Caterpillar parts and labor warranty

Preventive maintenance agreements available for repair before failure options

Scheduled Oil Sampling program matches your oil sample against Caterpillar set standards to determine:
- internal engine component condition
- presence of unwanted fluids
- presence of combustion by-products

Web Site

For all your industrial power requirements, visit www.cat-industrial.com.

CATERPILLAR®

Industrial Engine

C15 ACERT®

328-444 bkW/
440-595 bhp

STANDARD ENGINE EQUIPMENT

Air Inlet System
- Air to air aftercooled (ATAAC)
- Turbocharged

Control System
- Electronic governing, PTO speed control
- Programmable ratings
- Cold mode start strategy
- Automatic altitude compensation
- Power compensation for fuel temperature
- Programmable low and high idle and total engine limit
- Electronic diagnostics and fault logging
- Engine monitoring system
- J1939 Broadcast (diagnostic and engine status)
- ADEM™ A4

Cooling System
- Thermostats and housing, vertical outlet
- Jacket water pump, centrifugal
- Water pump, inlet

Exhaust System
- Exhaust manifold, dry
- Optional exhaust outlet

Flywheels and Flywheel Housing
- SAE No. 1 Flywheel housing

Fuel System
- MEUI injection
- Fuel filter, secondary (2 micron high performance)
- Fuel transfer pump
- Fuel priming pump
- ACERT® Technology

Lube System
- Crankcase breather
- Oil cooler
- Oil filler
- Oil filter
- Oil pan front sump
- Oil dipstick
- Oil pump (gear driven)

General
- Paint, Caterpillar Yellow
- Vibration damper
- Lifting eyes

CATERPILLAR®

Industrial Engine

C15 ACERT®

328-444 bkW/
440-595 bhp

PERFORMANCE CURVES

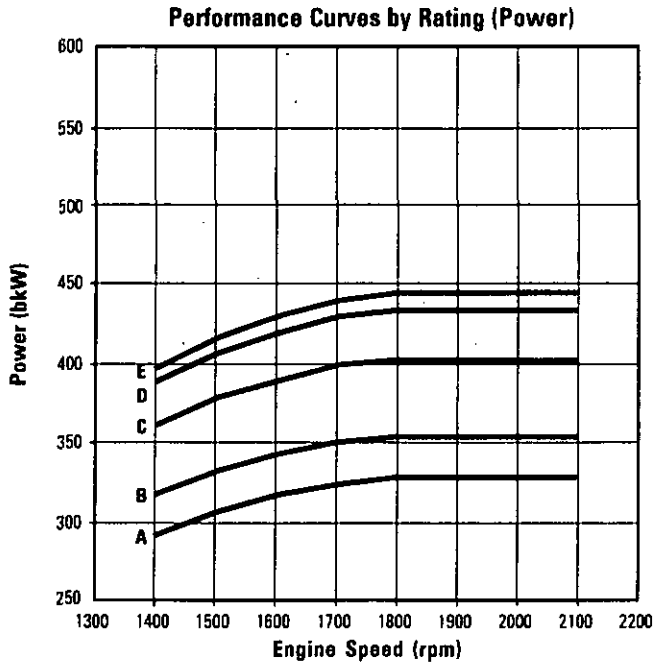

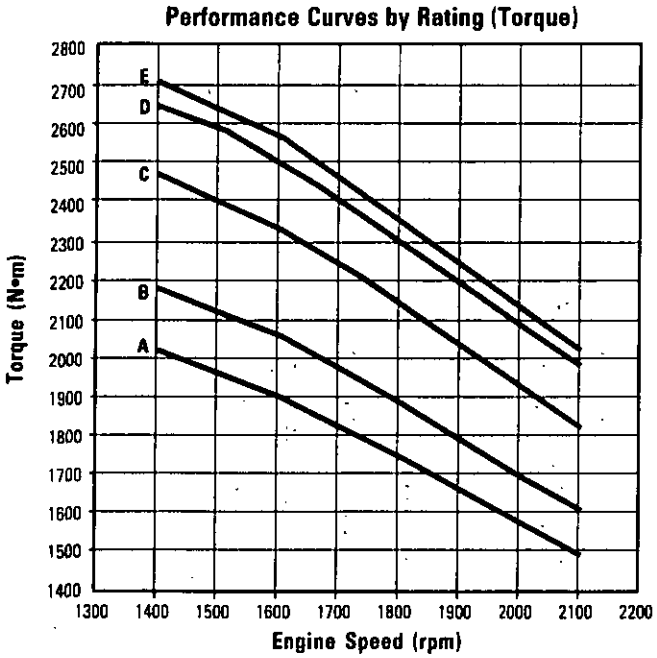

DIMENSIONS

Length	mm (in)	1661 (65.39)
Width	mm (in)	901 (35.47)
Height	mm (in)	1336 (52.60)

INDUSTRIAL RATINGS AND CONDITIONS

IND - A (Continuous) Continuous heavy duty service where the engine is operated at maximum power and speed up to 100% of the time without interruption or load cycling.

IND - B For service where power and/or speed are cyclic (time at full load not to exceed 80%).

IND - C (Intermittent) Intermittent service where maximum power and/or speed are cyclic (time at full load not to exceed 50%).

IND - D For service where maximum power is required for periodic overloads.

IND - E For service where maximum power is required for a short time for initial starting or sudden overload. For emergency service where standard power is unavailable.

Engine Performance Engine performance is corrected to inlet air standard conditions of 99 kPa (29.31 in Hg) dry barometer and 25° C (77° F) temperature. These values correspond to the standard atmospheric pressure and temperature as shown in SAE J1995.

Performance measured using a standard fuel with fuel gravity of 35 degrees API having a lower heating value of 42 780 kJ/kg (18,390 Btu/lb) when used at 29° C (84.2° F) where the density is 838.9 g/liter (7.001 lb/U.S. gal).

The corrected performance values shown for Caterpillar engines will approximate the values obtained when the observed performance data is corrected to SAE J1995, ISO 3046-2 and 8665 and 2288 and 9249 and 1585, EEC 80/1269 and DIN 70020 standard reference conditions.

©2005 Caterpillar
All rights reserved.

FMC

General Specifications

Link-Belt® 115-ton *(104.31 metric ton)* Tower/gantry crane

TG-1900

Equipment Sales & Service (1988) Limited
1030 Martin Grove Road Rexdale, Ontario M9W 4W3
(416) 249-8141 Telex 06-989373

BRANCHES: Ottawa • Sudbury • Calgary • Edmonton
Sparwood, B.C.

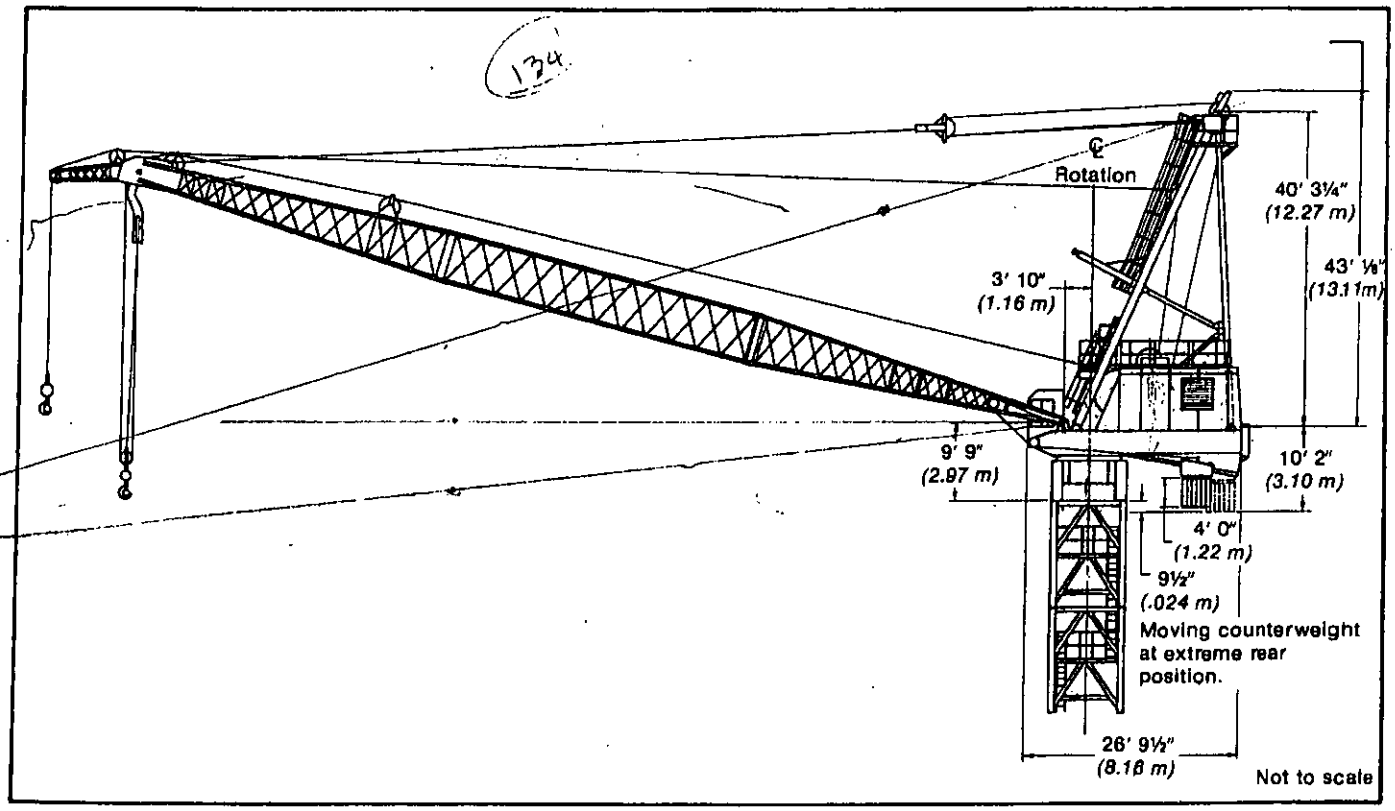

General dimensions	Feet	*meters*
Basic boom length	80' 0"	*24.38*
Maximum boom length	200' 0"	*60.96*
Length, optional boom tip extension	10' 0"	*3.05*
Tailswing	20' 10"	*9.15*
Over-all width, revolving upperstructure	13' 4"	*4.06*

Weights for transporting — approximate

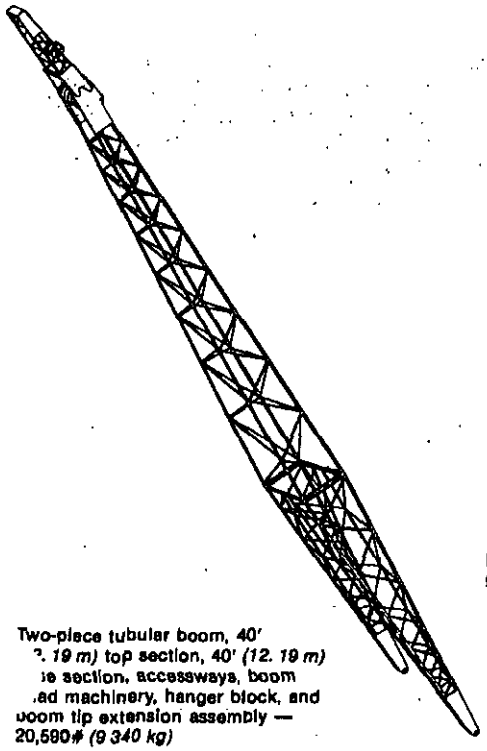

Two-piece tubular boom, 40' ?. 19 m) top section, 40' (12. 19 m) ie section, accessways, boom ad machinery, hanger block, and oom tip extension assembly — 20,590# (9 340 kg)

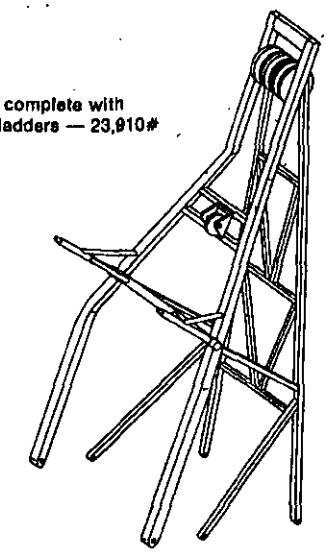

Mast assembly complete with platforms and ladders — 23,910# (10 846 kg)

Main load hoist drum and shaft — 9,700# (4 400 kg)

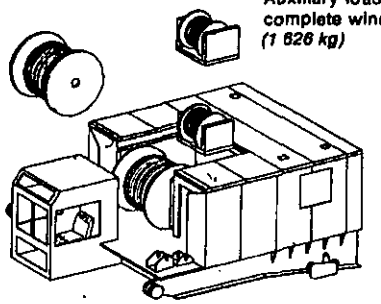

Auxiliary load hoist, including complete winch assembly — 3,585# (1 626 kg)

Basic upper including machine deck, swing system, turntable bearing, counterweight trolley, main and auxiliary load hoist winches (including drum assemblies), boomhoist cable, machinery cab, and operators cab — 84,555# (38 354 kg)

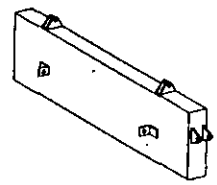

Fixed counterweight and linkage — 23,700# (10 750 kg)

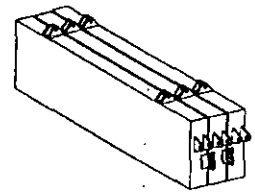

Moving counterweights (3 @ 23,600# — 10 705 kg) — 70,800# (32 114 kg)

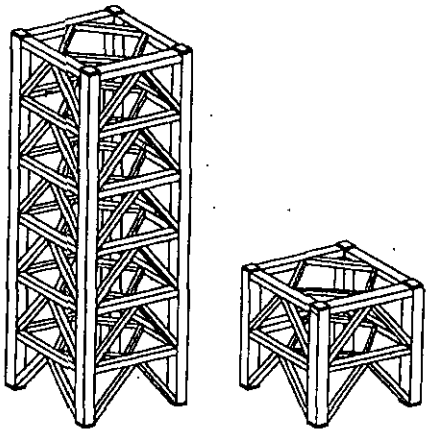

1900 tower weights — 40' (12.19 m) tower assembly complete — 30,685# (13 910 kg), 13' 7½" (4.15 m) tower assembly complete — 11,670# (5 294 kg)

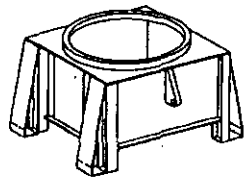

Turntable bearing mounting base and bolts — 16,560# (7 512 kg)

Machine working weights — approximate

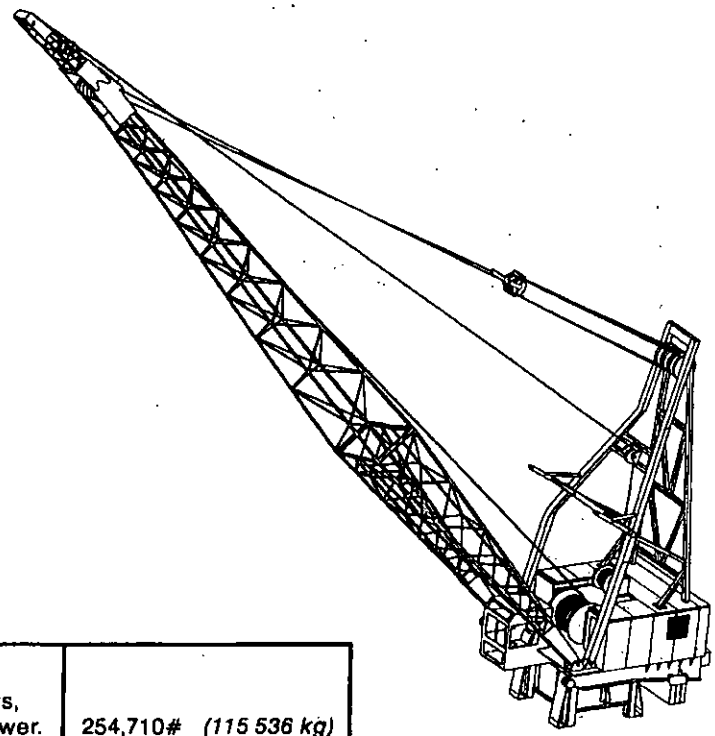

Machine w/80' *(24.38 m)* boom, 10' *(3.05 m)* boom tip extension, including counterweights, all necessary operating equipment, but no tower.	254,710# *(115 536 kg)*

General Specifications

Foundation

Foundation requirements and foundation reaction charts — consult factory.

Tower

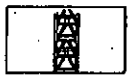

Free standing tower (non-climbing)

Welded, high strength, low alloy steel, wide flange beams. Sections 13' 7½" *(4.15 m)* or 40' *(12.19 m)* long, 9' 9" x 9' 9" *(2.97 x 2.97 m)* outside dimensions; bolted together on machined pads at each corner.

Climbing tower — consult factory.

Revolving upperstructure

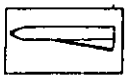

Frame

All-welded, high strength, low alloy steel; machined to accommodate boom, mast, swing-system, main hoist drum mounting frame and drum, power unit and operator's cab. Optional: auxiliary hoist drum mounting frame and drum mounted on top of main hoist drum frame.

Turntable bearing mounting base

Welded, high-strength, low-alloy steel, wide-flange beam construction. The circular turntable bearing mounting pad, along with the tower connecting pads, are machined to assure squareness, proper fit, and a flat surface to uniformly transfer loads. Overall dimensions for the mounting base are 9' 9" x 12' 3⅜" x 5' 3⅜" *(2.97 x 3.75 x 1.61 m)* high.

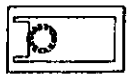

Turntable bearing

Roller bearing type; inner race with integral swing gear bolted to transition section mounted on top of tower section; outer race bolted to revolving upperstructure frame. Swing gear teeth machine-cut.

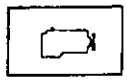

Engine

Diesel; turbocharged full pressure lubrication, oil filter, air cleaner, hour meter, hand throttle, and complete set of engine gauges. Optional: electric motor drive — consult factory.

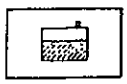

Fuel tank

750 gallons *(2 839 L)* capacity. (Sufficient to run crane for approximately 80 hours of average lifting crane operation.)

Hydraulic system

[illegible] boomhoist, main load and auxiliary load hoist drums — all hydraulically operated. Hydraulic power is supplied by reversible flow, variable displacement, piston-type pumps, flange mounted to gear reduction unit, which is mounted on output shaft of engine. Hydraulic pumps are connected through closed loop hydraulic circuit to radial piston hydraulic motors which power operating functions. Normal braking of operational functions accomplished by hydraulic motors when oil flow through motors is reduced by movement of control lever toward neutral position.

Engine Specifications	GM 12V-71T
Number of cylinders	12
Bore and stroke — inches — *(mm)*	4¼ x 5 *(108 x 127)*
Piston displacement — cu. in. — *(cm³)*	852 *(13 964)*
High idle r.p.m.	2 050
Horsepower @ full load speed — — *(W)*	493 *(367 630)*
Peak torque — ft. lbs. — *(J)*	1450 @ 1850 r.p.m. *(1966)*
Electrical system Batteries	24-volt 2 - 12-volt

Sump tank

Fabricated steel, non-pressurized; baffled for strength and deaeration. Mounted above power unit. Return line filter mounted on internal side of tank, and charge filter mounted in pressurized line between suction pump and charge pumps mounted to power unit. Capacity — 120 gallons *(454.25 L)*.

Principal Operating Functions —

Control system

Air controls; control levers for various functions mounted convenient to operator; "dead man" type controls return to "zero speed, brake on" position if released.

Main load hoist drum

Grooved, 54" *(1.37 m)* root diameter; mounted on anti-friction bearings on non-turning shaft. Drum driven through spur gear reduction by four two-speed, high torque, radial piston hydraulic motors. Infinitely variable rope drum speed control in three speed ranges — low, medium, and high — is standard.

Low Speed — Hydraulic motors each set to run at 90 cu. in. *(1 475.10 cm³)* displacement per revolution.

Medium Speed — Two hydraulic motors each set to run at 25 cu. in. *(409.75 cm³)*, and two hydraulic motors set to run at 90 cu. in. *(1 475.10 cm³)* displacement per revolution.

High Speed — Hydraulic motors each set to run at 25 cu. in. *(409.75 cm³)* displacement per revolution.

Optional main load hoist drum — Available is an optional main hoist drum for greater wire rope capacities.

Auxiliary load hoist drum — Optional. Smooth, 18" *(0.46 m)* root diameter, 33⅛" *(0.84 m)* wide between flanges; mounted on anti-friction bearings on non-turning shaft. Drum driven through spur gear reduction by one 2-speed, high torque, radial piston hydraulic motor. Infinitely variable speed control in two speed ranges — low and high — is standard.

Low speed — Hydraulic motor set to run at 90 cu. in. *(1 475.10 cm³)* displacement per revolution.

High speed — Hydraulic motor set to run at 45 cu. in. *(737.55 cm³)* displacement per revolution.

Drum brakes

External contracting band holding brakes; spring applied, air released. Brake drums involute splined to hydraulic motor counter-shafts at opposite end of shafts from motors. Brakes spring applied when control lever is moved to "brake on" position; air released when control lever is moved to neutral position — at which time hydraulic motor is blocked hydraulically to restrain load.

Load indicating and overload warning system — Equipped with a load-moment device for measuring the load and the load radius. Incorporated with this device is an overload warning system which warns the operator when an overload condition exists and inhibits certain functions of the machine.

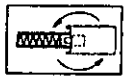

Swing mechanism

Two fixed displacement, high torque, radial piston hydraulic motors; each drive one vertical swing shaft. Machine-cut swing pinion splined on each vertical swing shaft.

Swing Brake — Disc type, mounted on one hydraulic swing motor, spring applied, air released. Holding brake only, *not intended for stopping swing.*

Swing Speed — 1.45 r.p.m. @ high idle no load; 1.14 r.p.m. @ engine full load speed.

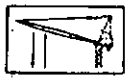

Independent hydraulic boomhoist

Grooved, wire rope drum, 24" *(0.61 m)* root diameter; mounted on anti-friction bearings on non-turning shaft. Drum driven through spur gear reduction by one hydraulic motor. Infinitely variable control.

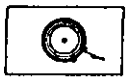

Boomhoist brake

Arrangement same as for load hoist drum brakes.

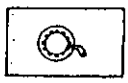

Drum locking pawl

Mechanical drum locking pawl is standard; pawl is air released.

Electrical system

24-volt; two 12-volt batteries.

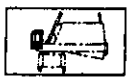

Operator's cab

Completely enclosed operator's cab is located between boomfeet for greater visibility. Tinted safety glass is used throughout the cab. The side windows are sliding. Main front windows swing outward for ventilation and ease of cleaning, while the upper and lower front windows are stationary. Rear door slides to the right and has provisions for a padlock. To reduce the sound level, the cab is trimmed with sound proofing. Instrumentation includes tachometer, air pressure gauge, load gauges, and load indicator. Standard equipment also includes two dome lights, a dry chemical fire extinguisher, defroster fan and hot water heater.

Machinery cab

Fabricated steel cab has two doorways at front of cab to provide inside access. Two doorways provide access to the sump tank for service, while a doorway is also provided for access to the hydraulic lines. A ladder and platform is provided to gain access to roof. Handrail is provided around the roof of the machinery cab and winch package. *Three lights are also provided inside the* machinery cab as standard equipment.

Counterweight

Total 94,400# *(42 819 kg)*. One fixed counterweight — 23,600# *(10 705 kg)* — *attached to rear of frame. Moving* counterweight — 70,800# *(32 114 kg)* consisting of three segments weighing 23,600# *(10 705 kg)* each — is attached to moving trolley which rides on underneath side of revolving upperstructure frame. Counterweight moves toward rear of frame as boom is lowered — provides rear moment to compensate for that which is imposed by lifting load.

Boom

Heavy duty boom

Tubular; basic boom two-piece 80' *(24.38 m)* long; 75" wide *(1.90 m)*, 75" *(1.90 m)* deep at connections. Main chords of T-1 alloy steel are 5¼" *(0.13 m)* outside diameter. Maximum boom length is 200' *(60.96 m)*. Expanded metal walkways are provided on top of the boom for access to the boomhead machinery.

Base section — 40' *(12.19 m)* long, boom feet are 4¾" *(0.12 m)* wide on 96⅛" *(2.44 m)* centers.

Boom extensions — Available in 10' *(3.05 m)*, 20' *(6.10 m)*, 30 *(9.14 m)* and 40' *(12.19 m)* lengths with appropriate length pendants.

Top section — 40' *(12.19 m)* long. Equipped with two head sheaves. Sheaves are mounted on anti-friction bearings. A hanger block equipped with single sheave is supplied as standard equipment for use with 3 or 4 parts of line.

Boom connections — In-line pin connected.

Boom tip extension

Optional: Tapered, 10' *(3.05 m)* long, 14,800# *(6 713 kg)* rating. Tubular main chords, 100,000 p.s.i. *(7 031 kg/cm²)* alloy steel; pin-connected to boom top section in fixed position, 18 degrees offset from boom. Equipped with one main load hoist rope sheave and one hoist rope deflector sheave mounted on anti-friction bearings. Mounts on boom *lengths 80' (24.38 m) through 200' (60.96 m).*

Boom stops

Dual, rigid, with spring loaded bumper ends: mounted on mast.

Boomhoist bridle

Connects boomhoist wire rope reeving to boom pendants. Equipped with three sheaves, mounted on anti-friction bearings to accommodate 6-part boomhoist wire rope reeving.

Mast

Supports boom suspension system. Wide flange beam construction, pin-connected to revolving upperstructure frame. Equipped with three boomhoist sheaves on anti-friction bearings and one fleeting auxiliary load hoist line deflector sheave.

Mast ladders and platforms — Accessibility to the mast for reeving rope and maintenance is provided by upper and lower platforms. The upper platform is located near the top of the mast, while the lower platform is located 10½' *(3.20 m)* above the crane deck. A ladder provides accessibility to both platforms.

FMC

Auxiliary Equipment

Boom angle indicator

Standard; pendulum type mounted on boom base section.

Load hoist limit switch — Prevents hoisting load into boom peak.

Engine alarm — Trips warning buzzer if water temperature is too high or if engine oil pressure is too low.

Main air solenoid valve — When properly adjusted, acts to immobilize all systems in event of an engine failure.

We are constantly improving our products and therefore reserve the right to change designs and specifications.

FMC

Link-Belt® TG-1900 lifting crane capacities — without climbing frame

Refer to Notes page 15.

Tower — **free standing,** without climbing frame; 9' 9" x 9' 9" (2.97 x 2.97 m) cross section. Tower heights 13' 7½" (4.15 m) through 162' 7½" (49.57 m) — see footnote④.

Mast — 43' 0⅛" (13.11 m) over-all height.

Boom — tubular; 75" x 75" (1.91 x 1.91 m) with 40' (12.19 m) base section, 40' (12.19 m) top section, 1¾" (44 mm) diameter boom pendants, with or without boom tip extension.

Boom tip extension — tubular; 14,800# *(6 713 kg) rating; 10' (3.05 m) long.*

Counterweights — Total 94,400# (42 820 kg). Includes one fixed counterweight — 23,600# (10 705 kg) plus one moving counterweight — 70,800# (32 115 kg) consisting of three sections weighing *23,600# (10 705 kg) each.*

Boom				Load radius③		Capacities — Main boom only①							
	Angle	Boom point height②				4-part hoist line		3-part hoist line		2-part hoist line		1-part hoist line	
Length	Degree	Feet	meters	Feet	meters	Pounds	kilograms	Pounds	kilograms	Pounds	kilograms	Pounds	kilograms
80' (24.38 m)	85.5	89' 6"	27.27	10	3.05					115,200	52 253		
	84.8	89' 5"	27.25	11	3.35								
	84.1	89' 4"	27.22	12	3.66								
	83.4	89' 2"	27.19	13	3.96								
	82.7	89' 1"	27.15	14	4.27							57,600	26 126
	81.9	88' 11"	27.11	15	4.57								
	78.3	88' 1"	26.84	20	6.10	230,400	104 507	172,800	78 380				
	74.6	86' 10"	26.48	25	7.62	230,400	104 507						
	70.9	85' 4"	26.00	30	9.14	204,200	92 623						
	67.0	83' 5"	25.42	35	10.67	177,500	80 512	172,800	78 380				
	63.1	81' 1"	24.71	40	12.19	156,800	71 123	157,100	71 259				
	54.7	75' 0"	22.87	50	15.24	126,800	57 515	127,100	57 651	115,200	52 253		
	45.4	68' 8"	20.31	60	18.29	106,300	48 216	106,600	48 352	106,800	48 443		
	34.1	54' 8"	16.65	70	21.34	90,200	40 914	90,400	41 004	90,700	41 140		
	17.7	34' 1"	10.38	80	24.38	69,000	31 297	69,700	31 615	71,100	32 250	57,600	26 126
90' (27.43 m)	85.4	99' 5"	30.31	11	3.35					115,100	52 208		
	84.8	99' 4"	30.28	12	3.66								
	84.1	99' 3"	30.25	13	3.96								
	83.5	99' 2"	30.22	14	4.27							57,500	26 081
	82.8	99' 0"	30.18	15	4.57								
	79.6	98' 3"	29.95	20	6.10	230,300	104 462	172,700	78 335				
	76.4	97' 2"	29.62	25	7.62	230,300	104 462						
	73.1	95' 10"	29.21	30	9.14	201,900	91 580						
	69.7	94' 2"	28.69	35	10.67	175,400	79 560	172,700	78 335				
	66.3	92' 1"	28.08	40	12.19	154,700	70 170	155,100	70 352				
	59.1	86' 11"	26.50	50	15.24	124,800	56 608	125,200	56 789	115,100	52 208		
	51.4	80' 0"	24.39	60	18.29	104,300	47 309	104,600	47 445	104,900	47 581		
	42.6	70' 8"	21.55	70	21.34	88,600	40 188	88,900	40 324	89,100	40 415		
	32.1	57' 7"	17.56	80	24.38	76,500	34 699	76,700	34 790	77,000	34 926		
	16.7	35' 7"	10.84	90	27.43	59,700	27 079	60,300	27 351	61,400	27 850	57,500	26 081
100' (30.48 m)	85.3	109' 5"	33.34	12	3.66					115,000	52 163		
	84.7	109' 4"	33.31	13	3.96								
	84.1	109' 2"	33.28	14	4.27								
	83.6	109' 1"	33.25	15	4.57							57,500	26 081
	80.7	108' 5"	33.04	20	6.10								
	77.8	107' 5"	32.75	25	7.62	230,100	104 371	172,500	78 244				
	74.8	106' 3"	32.38	30	9.14	199,700	90 582	172,500	78 244				
	71.8	104' 9"	31.92	35	10.67	173,300	78 607	172,500	78 244				
	68.8	102' 11"	31.38	40	12.19	152,700	69 263	153,200	69 490				
	62.5	98' 5"	29.99	50	15.24	122,900	55 746	123,400	55 973	115,000	52 163		
	55.8	92' 5"	28.17	60	18.29	102,400	46 447	102,800	46 629	103,200	46 810		
	48.5	84' 8"	25.81	70	21.34	87,100	39 507	87,500	39 689	87,900	39 870		
	40.4	74' 6"	22.70	80	24.38	74,900	33 974	75,200	34 110	75,600	34 291		
	30.4	60' 5"	18.41	90	27.43	65,600	29 755	65,800	29 846	66,100	29 982	57,500	26 081
	15.8	37' 0"	11.28	100	30.48	51,900	23 541	52,400	23 768	53,300	24 176	55,800	25 310
110' (33.53 m)	85.2	119' 4"	36.37	13	3.96					114,900	52 117		
	84.7	119' 3"	36.35	14	4.27								
	84.2	119' 2"	36.32	15	4.57								
	81.5	118' 6"	36.13	20	6.10							57,400	26 036
	78.9	117' 8"	35.86	25	7.62	229,900	104 280	172,400	78 199				
	76.2	116' 7"	35.53	30	9.14	197,500	89 584	172,400	78 199				
	73.5	115' 2"	35.11	35	10.67	171,300	77 700	171,800	77 927				
	70.8	113' 7"	34.62	40	12.19	150,800	68 401	151,300	68 628				
	65.2	109' 7"	33.39	50	15.24	121,100	54 930	121,600	55 156	114,900	52 117		
	59.3	104' 3"	31.78	60	18.29	100,700	45 676	101,100	45 858	101,600	46 084		
	53.0	97' 7"	29.74	70	21.34	85,800	38 918	86,200	39 099	86,600	39 281		
	46.1	89' 1"	27.14	80	24.38	73,600	33 384	74,000	33 565	74,300	33 701		
	38.4	78' 1"	23.79	90	27.43	64,100	29 075	64,400	29 211	64,800	29 392		
	29.0	63' 1"	19.22	100	30.48	56,700	25 718	56,900	25 809	57,200	25 945	57,400	26 036
	15.1	38' 4"	11.69	110	33.53	45,200	20 502	45,600	20 683	46,400	21 046	48,400	21 953

(continued)

④Consult manufacturer for tower heights greater than 162' 7½" (49.57 m).

①Load handled off main boom head sheaves with 10' (3.05 m) boom tip extension mounted on boom.
②Measured vertically from center of boom head sheave to base of turntable bearing mounting.
③Measured from center of tower base section to center of gravity of freely suspended load.

TG-1900 lifting crane capacities — without climbing frame

Refer to Notes page 15.

Boom				Load radius②		Capacities — Main boom only①							
	Angle	Boom point height②				4-part hoist line		3-part hoist line		2-part hoist line		1-part hoist line	
Length	Degree	Feet	meters	Feet	meters	Pounds	kilograms	Pounds	kilograms	Pounds	kilograms	Pounds	kilograms
120' (36.58 m)	85.6	129' 4"	39.43	13	3.96					114,800	52 072		
	85.1	129' 3"	39.41	14	4.27								
	84.6	129' 2"	39.38	15	4.57								
	82.2	128' 7"	39.20	20	6.10							57,400	26 036
	79.8	127' 10"	38.96	25	7.62	229,700	104 190	172,200	78 108				
	77.4	126' 10"	38.66	30	9.14	195,300	88 586	172,200	78 108				
	74.9	125' 7"	38.28	35	10.67	169,200	76 747	169,800	77 019				
	72.4	124' 2"	37.83	40	12.19	148,900	67 539	149,400	67 766				
	67.4	120' 6"	36.72	50	15.24	119,400	54 158	119,900	54 385	114,800	52 072		
	62.1	115' 9"	35.28	60	18.29	99,000	44 905	99,500	45 132	100,000	45 359		
	56.5	109' 10"	33.47	70	21.34	84,100	38 147	84,600	38 373	85,000	38 555		
	50.6	102' 5"	31.22	80	24.38	72,300	32 794	72,800	33 021	73,200	33 202		
	44.1	93' 2"	28.41	90	27.43	62,800	28 485	63,200	28 667	63,600	28 848	57,400	26 036
	36.7	81' 5"	24.82	100	30.48	55,200	25 038	55,600	25 219	55,900	25 355	56,200	25 491
	27.7	65' 7"	19.99	110	33.53	49,200	22 316	49,500	22 452	49,700	22 543	50,000	22 679
	14.4	39' 8"	12.09	120	36.58	39,600	17 916	39,800	18 052	40,400	18 325	42,000	19 050
130' (39.62 m)	85.5	139' 4"	42.47	14	4.27					114,700	52 027		
	85.1	139' 3"	42.44	15	4.57								
	82.8	138' 9"	42.28	20	6.10							57,300	25 990
	80.6	138' 0"	42.06	25	7.62								
	78.4	137' 1"	41.77	30	9.14	193,200	87 634	172,100	78 063				
	76.1	135' 11"	41.43	35	10.67	167,200	75 840	167,800	76 112				
	73.8	134' 7"	41.02	40	12.19	147,000	66 678	147,600	66 950				
	69.2	131' 3"	40.00	50	15.24	117,600	53 342	118,200	53 614	114,700	52 027		
	64.4	126' 11"	38.69	60	18.29	97,300	44 134	97,900	44 406	98,400	44 633		
	59.4	121' 7"	37.06	70	21.34	82,500	37 421	83,000	37 648	83,600	37 920		
	54.1	115' 1"	35.07	80	24.38	71,100	32 250	71,600	32 477	72,200	32 749		
	48.5	107' 0"	32.62	90	27.43	61,500	27 895	62,000	28 122	62,500	28 349	57,300	25 990
	42.3	97' 2"	29.61	100	30.48	53,900	24 448	54,300	24 630	54,800	24 856	55,200	25 038
	35.2	84' 8"	25.81	110	33.53	47,800	21 681	48,100	21 817	48,500	21 999	48,900	22 180
	26.6	68' 0"	20.73	120	36.58	42,800	19 413	43,100	19 549	43,400	19 685	43,700	19 821
	13.9	40' 11"	12.46	130	39.62	34,400	15 603	34,700	15 739	35,300	16 011	36,600	16 601
140' (42.67 m)	85.4	149' 3"	45.50	15	4.57					114,600	51 981		
	83.4	148' 9"	45.35	20	6.10							57,300	25 990
	81.3	148' 1"	45.14	25	7.62								
	79.2	147' 3"	44.88	30	9.14	190,900	86 590	172,000	78 017				
	77.1	146' 2"	44.56	35	10.67	165,200	74 933	165,800	75 205				
	75.0	145' 0"	44.18	40	12.19	145,100	65 816	145,800	66 133				
	70.7	141' 11"	43.24	50	15.24	115,900	52 571	116,500	52 843	114,600	51 981		
	66.3	137' 11"	42.05	60	18.29	95,700	43 408	96,300	43 680	96,900	43 953		
	61.8	133' 1"	40.56	70	21.34	80,900	36 695	81,500	36 967	82,100	37 239		
	57.0	127' 2"	38.76	80	24.38	69,700	31 615	70,200	31 842	70,800	32 114		
	52.0	120' 0"	36.59	90	27.43	60,400	27 396	60,900	27 623	61,400	27 850	57,300	25 990
	46.6	111' 5"	33.96	100	30.48	52,700	23 904	53,200	24 131	53,700	24 357	54,200	24 584
	40.7	100' 11"	30.77	110	33.53	46,500	21 092	46,900	21 273	47,400	21 500	47,800	21 681
	33.9	87' 10"	26.76	120	36.58	41,400	18 778	41,800	18 960	42,200	19 141	42,500	19 277
	25.6	70' 4"	21.43	130	39.62	37,300	16 918	37,600	17 055	37,900	17 191	38,100	17 281
	13.4	42' 1"	12.83	140	42.67	29,900	13 562	30,200	13 698	30,700	13 925	31,800	14 424
150' (45.72 m)	85.7	159' 4"	48.56	15	4.57					114,500	51 936		
	83.8	158' 10"	48.42	20	6.10							57,200	25 945
	81.9	158' 3"	48.22	25	7.62								
	79.9	157' 5"	47.98	30	9.14	188,800	85 638	171,800	77 927				
	78.0	156' 5"	47.68	35	10.67	163,200	74 026	163,900	74 343				
	76.0	155' 3"	47.33	40	12.19	143,200	64 954	143,900	65 271				
	72.1	152' 5"	46.46	50	15.24	114,200	51 800	114,900	52 117	114,500	51 936		
	68.0	148' 10"	45.35	60	18.29	94,100	42 683	94,700	42 955	95,400	43 272		
	63.8	144' 4"	43.99	70	21.34	79,400	36 015	80,000	36 287	80,700	36 604		
	59.5	138' 11"	42.34	80	24.38	68,200	30 935	68,800	31 207	69,400	31 479		
	54.9	132' 6"	40.38	90	27.43	59,300	26 898	59,800	27 124	60,400	27 396	57,200	25 945
	50.1	124' 10"	38.04	100	30.48	51,500	23 360	52,100	23 632	52,700	23 904	53,200	24 131
	44.9	115' 8"	35.25	110	33.53	45,300	20 547	45,800	20 774	46,300	21 001	46,800	21 228
	39.2	104' 7"	31.87	120	36.58	40,100	18 189	40,600	18 415	41,100	18 642	41,500	18 824
	32.7	90' 9"	27.67	130	39.62	35,900	16 283	36,300	16 465	36,700	16 646	37,100	16 828
	24.8	72' 7"	22.11	140	42.67	32,300	14 651	32,600	14 787	32,900	14 923	33,200	15 059
	12.9	43' 3"	13.18	150	45.72	25,900	11 748	26,200	11 884	26,600	12 065	27,500	12 473

(continued)

①Load handled off main boom head sheaves with 10' (3.05 m) boom tip extension mounted on boom.
②[illegible]sured vertically from center of boom head sheave to base of turntable bearing mounting.
([illegible]red from center of tower base section to center of gravity of freely suspended load.

TG-1900 lifting crane capacities — without climbing frame

Refer to Notes page 15.

Boom				Load radius②		Capacities — Main boom only①							
	Angle	Boom point height③				4-part hoist line		3-part hoist line		2-part hoist line		1-part hoist line	
Length	Degree	Feet	meters	Feet	meters	Pounds	kilograms	Pounds	kilograms	Pounds	kilograms	Pounds	kilograms
160' (48.77 m)	84.2	168' 11"	51.48	20	6.10					114,400	51 890		
	82.4	168' 4"	51.30	25	7.62							57,200	25 945
	80.6	167' 7"	51.07	30	9.14								
	78.8	166' 8"	50.79	35	10.67	161,100	73 073	161,900	73 438				
	76.9	165' 7"	50.47	40	12.19	141,300	64 092	142,100	64 455	114,400	51 890		
	73.2	162' 11"	49.65	50	15.24	112,400	50 983	113,200	51 346	113,900	51 664		
	69.4	159' 6"	48.62	60	18.29	92,500	41 957	93,200	42 274	93,900	42 592		
	65.6	155' 5"	47.36	70	21.34	77,800	35 289	78,500	35 607	79,200	35 924		
	61.6	150' 5"	45.84	80	24.38	66,700	30 254	67,300	30 526	68,000	30 844		
	57.4	144' 6"	44.05	90	27.43	57,900	26 263	58,600	26 580	59,200	26 852	57,200	25 945
	53.0	137' 7"	41.93	100	30.48	50,400	22 861	51,000	23 133	51,700	23 450	52,300	23 722
	48.4	129' 5"	39.44	110	33.53	44,100	20 003	44,700	20 275	45,300	20 547	45,900	20 819
	43.4	119' 8"	36.49	120	36.58	39,000	17 690	39,500	17 916	40,000	18 143	40,500	18 370
	37.9	108' 1"	32.94	130	39.62	34,600	15 694	35,100	15 921	35,600	16 147	36,100	16 374
	31.6	93' 8"	28.55	140	42.67	30,900	14 016	31,400	14 242	31,800	14 424	32,200	14 605
	24.0	74' 9"	22.77	150	45.72	27,900	12 655	28,200	12 791	28,500	12 927	28,900	13 108
	12.5	44' 4"	13.52	160	48.77	22,300	10 115	22,600	10 251	22,900	10 387	23,700	10 750
170' (51.82 m)	84.5	178' 11"	54.54	20	6.10					114,300	51 845		
	82.8	178' 5"	54.37	25	7.62							57,100	25 900
	81.1	177' 8"	54.16	30	9.14								
	79.4	176' 10"	53.90	35	10.67	159,100	72 188	159,900	72 529				
	77.7	175' 10"	53.59	40	12.19	139,400	63 230	140,200	63 593	114,300	51 845		
	74.2	173' 4"	52.83	50	15.24	110,700	50 212	111,500	50 575	112,300	50 938		
	70.7	170' 2"	51.87	60	18.29	90,900	41 231	91,600	41 549	92,400	41 911		
	67.1	166' 4"	50.69	70	21.34	76,300	34 609	77,000	34 928	77,800	35 289		
	63.4	161' 8"	49.28	80	24.38	65,200	29 574	65,900	29 891	66,700	30 254		
	59.5	156' 3"	47.62	90	27.43	56,500	25 627	57,200	25 945	57,900	26 263	57,100	25 900
	55.5	149' 11"	45.68	100	30.48	49,400	22 407	50,000	22 679	50,700	22 997	51,400	23 314
	51.3	142' 6"	43.42	110	33.53	43,000	19 504	43,700	19 821	44,300	20 094	45,000	20 411
	46.9	133' 10"	40.78	120	36.58	37,800	17 145	38,400	17 417	39,000	17 690	39,600	17 962
	42.1	123' 7"	37.68	130	39.62	33,500	15 195	34,000	15 422	34,600	15 694	35,100	15 921
	36.8	111' 5"	33.97	140	42.67	29,700	13 471	30,200	13 698	30,700	13 925	31,200	14 152
	30.7	96' 6"	29.40	150	45.72	26,600	12 065	27,000	12 246	27,400	12 428	27,800	12 609
	23.2	76' 10"	23.41	160	48.77	24,000	10 886	24,300	11 022	24,600	11 158	25,000	11 339
	12.1	45' 5"	13.85	170	51.82	19,000	8 618	19,200	8 708	19,600	8 890	20,200	9 162
180' (54.86 m)	84.8	189' 0"	57.60	20	6.10					114,200	51 800		
	83.2	188' 6"	57.45	25	7.62							57,100	25 900
	81.6	187' 10"	57.24	30	9.14								
	80.0	187' 0"	57.00	35	10.67	152,500	69 172	153,400	69 581				
	78.4	186' 1"	56.71	40	12.19	137,500	62 368	138,300	62 731	114,200	51 800		
	75.1	183' 8"	55.99	50	15.24	109,000	49 441	109,800	49 804	110,700	50 212		
	71.8	180' 9"	55.08	60	18.29	89,200	40 460	90,100	40 868	90,900	41 231		
	68.4	177' 1"	53.98	70	21.34	74,800	33 928	75,600	34 291	76,400	34 654		
	65.0	172' 10"	52.67	80	24.38	63,700	28 893	64,500	29 256	65,300	29 619		
	61.4	167' 9"	51.13	90	27.43	55,000	24 947	55,800	25 310	56,600	25 673	57,100	25 900
	57.7	161' 10"	49.33	100	30.48	48,100	21 817	48,800	22 135	49,500	22 452	50,300	22 815
	53.8	155' 1"	47.26	110	33.53	42,000	19 050	42,700	19 368	43,400	19 685	44,100	20 003
	49.8	147' 2"	44.86	120	36.58	36,700	16 646	37,400	16 964	38,000	17 236	38,700	17 554
	45.5	138' 1"	42.08	130	39.62	32,300	14 651	32,900	14 923	33,600	15 240	34,200	15 512
	40.8	127' 5"	38.83	140	42.67	28,600	12 972	29,100	13 199	29,700	13 471	30,300	13 743
	35.7	114' 9"	34.96	150	45.72	25,300	11 475	25,800	11 702	26,300	11 929	26,900	12 201
	29.8	99' 2"	30.22	160	48.77	22,600	10 251	23,100	10 477	23,500	10 659	23,900	10 840
	22.6	78' 10"	24.03	170	51.82	20,400	9 253	20,700	9 389	21,100	9 570	21,400	9 706
	11.8	46' 6"	14.17	180	54.86	16,600	7 257	16,200	7 348	16,500	7 484	17,100	7 756

(continued)

①Load handled off main boom head sheaves with 10' (3.05 m) boom tip extension mounted on boom.
②Measured vertically from center of boom head sheave to base of turntable bearing mounting.
③Measured from center of tower base section to center of gravity of freely suspended load.

DORAL - @ 39TH.

TG-1900 lifting crane capacities — without climbing frame

Refer to Notes page 15.

Boom				Load radius③		Capacities — Main boom only①							
	Angle	Boom point height②				4-part hoist line		3-part hoist line		2-part hoist line		1-part hoist line	
Length	Degree	Feet	meters	Feet	meters	Pounds	kilograms	Pounds	kilograms	Pounds	kilograms	Pounds	kilograms
190' (57.91 m)	85.1	199' 0"	60.66	20	6.10					114,100	51 754		
	83.6	198' 6"	60.51	25	7.62					↑	↑	57,000	25 854
	82.1	197' 11"	60.32	30	9.14							↑	↑
	80.5	197' 2"	60.09	35	10.67	139,400	63 230	140,300	63 639	↓	↓		
	79.0	196' 3"	59.81	40	12.19	134,200	60 872	136,500	61 915	114,100	51 754		
	75.9	194' 0"	59.14	50	15.24	105,500	47 854	108,000	48 987	109,000	49 441		
	72.8	191' 3"	58.28	60	18.29	86,900	39 417	88,500	40 142	89,400	40 551		
	69.6	187' 10"	57.25	70	21.34	73,200	33 202	74,100	33 611	75,000	34 019		
	66.4	183' 9"	56.01	80	24.38	62,300	28 258	63,100	28 621	63,900	28 984	57,000	25 854
	63.0	179' 0"	54.57	90	27.43	53,600	24 312	54,400	24 675	55,300	25 083	56,100	25 446
	59.6	173' 7"	52.90	100	30.48	46,700	21 182	47,500	21 545	48,300	21 908	49,000	22 226
	56.0	167' 3"	50.98	110	33.53	40,900	18 551	41,700	18 914	42,400	19 232	43,200	19 595
	52.3	160' 0"	48.78	120	36.58	35,700	16 193	36,400	16 510	37,100	16 828	37,800	17 145
	48.4	151' 9"	46.25	130	39.62	31,200	14 152	31,900	14 469	32,600	14 787	33,300	15 104
	44.2	142' 2"	43.34	140	42.67	27,500	12 473	28,100	12 745	28,700	13 018	29,400	13 335
	39.7	131' 1"	39.95	150	45.72	24,200	10 976	24,800	11 249	25,400	11 521	25,900	11 748
	34.7	117' 11"	35.93	160	48.77	21,400	9 706	21,900	9 933	22,500	10 205	23,000	10 432
	29.0	101' 9"	31.02	170	51.82	19,100	8 663	19,500	8 845	20,000	9 071	20,400	9 253
	22.0	80' 9"	24.63	180	54.86	17,200	7 801	17,500	7 937	17,900	8 119	18,200	8 255
	11.5	47' 6"	14.48	190	57.91	13,200	5 987	13,400	6 078	13,700	6 214	14,200	6 441
200' (m)	85.4	209' 1"	63.72	20	6.10					114,000	51 709		
	83.9	208' 7"	63.58	25	7.62					↑	↑	57,000	25 854
	82.5	208' 0"	63.40	30	9.14							↑	↑
	81.0	207' 3"	63.18	35	10.67					↓	↓		
	79.6	206' 5"	62.92	40	12.19	125,300	56 835	126,300	57 288	114,000	51 709		
	76.6	204' 4"	62.27	50	15.24	101,600	46 084	104,200	47 264	107,400	48 715		
	73.7	201' 8"	61.47	60	18.29	83,400	37 829	85,500	38 782	87,900	39 870		
	70.7	198' 5"	60.49	70	21.34	70,600	32 023	72,300	32 794	73,500	33 339		
	67.6	194' 8"	59.32	80	24.38	60,800	27 578	61,700	27 986	62,600	28 394	57,000	25 854
	64.5	190' 2"	57.97	90	27.43	52,200	23 677	53,100	24 085	53,900	24 448	54,800	24 856
	61.2	185' 1"	56.41	100	30.48	45,300	20 547	46,100	20 910	47,000	21 318	47,800	21 681
	57.9	179' 2"	54.62	110	33.53	39,600	17 962	40,400	18 325	41,300	18 733	42,100	19 096
	54.5	172' 6"	52.58	120	36.58	34,600	15 694	35,400	16 057	36,200	16 420	36,900	16 737
	50.9	164' 10"	50.25	130	39.62	30,200	13 698	30,900	14 016	31,700	14 378	32,400	14 696
	47.1	156' 2"	47.60	140	42.67	26,400	11 974	27,100	12 292	27,800	12 609	28,500	12 927
	43.0	146' 2"	44.56	150	45.72	23,100	10 477	23,700	10 750	24,400	11 067	25,000	11 339
	38.6	134' 7"	41.03	160	48.77	20,300	9 207	20,900	9 480	21,500	9 752	22,100	10 024
	33.8	121' 0"	36.87	170	51.82	17,900	8 119	18,400	8 346	18,900	8 572	19,500	8 845
	28.2	104' 4"	31.80	180	54.86	15,800	7 166	16,300	7 393	16,700	7 574	17,200	7 801
	21.4	82' 8"	25.21	190	57.91	14,200	6 441	14,500	6 577	14,900	6 758	15,200	6 894
	11.2	48' 6"	14.78	200	60.96	10,600	4 808	10,800	4 898	11,100	5 034	11,500	5 216

①Load handled off main boom head sheaves with 10' (3.05 m) boom tip extension mounted on boom.
②Measured vertically from center of boom head sheave to base of turntable bearing mounting.
③Measured from center of tower base section to center of gravity of freely suspended load.

TG-1900 lifting crane capacities — with climbing frame

Refer to **Notes** page 15.

Tower — free standing, with climbing frame; 9' 9" x 9' 9" (2.97 x 2.97 m) cross section. Tower heights 40' 0" (12.19 m) through 162' 7½" (49.57 m) — see footnote⑧.

Mast — 43' 0⅛" (13.11 m) over-all height.

Boom — tubular; 75" x 75" (1.91 x 1.91 m) with 40' (12.19 m) base section, 40' (12.19 m) top section, 1¾" (44 mm) diameter boom pendants, with or without boom tip extension.

Boom tip extension — tubular; 14,800# (6 713 kg) rating; 10' (3.05 m) long.

Counterweights — Total 94,400# (42 820 kg). Includes one fixed counterweight — 23,600# (10 705 kg) plus one moving counterweight — 70,800# (32 115 kg) consisting of three sections weighing 23,600# (10 705 kg) each.

Boom				Load radius③		Capacities — Main boom only①							
	Angle	Boom point height②				4-part hoist line		3-part hoist line		2-part hoist line		1-part hoist line	
Length	Degree	Feet	meters	Feet	meters	Pounds	kilograms	Pounds	kilograms	Pounds	kilograms	Pounds	kilograms
80' (24.38 m)	85.5	89' 6"	27.27	10	3.05					115,200	52 253		
	84.8	89' 5"	27.25	11	3.35								
	84.1	89' 4"	27.22	12	3.66								
	83.4	89' 2"	27.19	13	3.96							57,600	26 126
	82.7	89' 1"	27.15	14	4.27								
	81.9	88' 11"	27.11	15	4.57								
	78.3	88' 1"	26.84	20	6.10	230,400	104 507	172,800	78 380				
	74.6	86' 10"	26.48	25	7.62	230,400	104 507	172,800	78 380				
	70.9	85' 4"	26.00	30	9.14	196,600	89 176	172,800	78 380				
	67.0	83' 5"	25.42	35	10.67	170,800	77 473	171,200	77 655				
	63.1	81' 1"	24.71	40	12.19	150,800	68 401	151,200	68 583				
	54.7	75' 0"	22.87	50	15.24	121,900	55 292	122,200	55 428	115,200	52 253		
	45.4	66' 8"	20.31	60	18.29	102,100	46 311	102,400	46 447	102,700	46 583		
	34.1	54' 8"	16.65	70	21.34	88,000	39 916	88,200	40 006	88,400	40 097		
	17.7	34' 1"	10.38	80	24.38	69,000	31 297	69,700	31 615	71,100	32 250	57,600	26 126
90' (27.43 m)	85.4	99' 5"	30.31	11	3.35					115,100	52 208		
	84.8	99' 4"	30.28	12	3.66								
	84.1	99' 3"	30.25	13	3.96								
	83.5	99' 2"	30.22	14	4.27							57,500	26 081
	82.8	99' 0"	30.18	15	4.57								
	79.6	98' 3"	29.95	20	6.10	230,300	104 462	172,700	78 335				
	76.4	97' 2"	29.62	25	7.62	228,500	103 645	172,700	78 335				
	73.1	95' 10"	29.21	30	9.14	194,300	88 133	172,700	78 335				
	69.7	94' 2"	28.69	35	10.67	168,700	76 521	169,100	76 702				
	66.3	92' 1"	28.08	40	12.19	148,700	67 449	149,100	67 630				
	59.1	86' 11"	26.50	50	15.24	119,900	54 385	120,300	54 567	115,100	52 208		
	51.4	80' 0"	24.39	60	18.29	100,100	45 404	100,400	45 540	100,800	45 722		
	42.6	70' 8"	21.55	70	21.34	85,800	38 918	86,100	39 054	86,400	39 190		
	32.1	57' 7"	17.56	80	24.38	75,200	34 110	75,400	34 200	75,600	34 291		
	16.7	35' 7"	10.84	90	27.43	59,700	27 079	60,300	27 351	61,400	27 850	57,500	26 081
100' (30.48 m)	85.3	109' 5"	33.34	12	3.66					115,000	52 163		
	84.7	109' 4"	33.31	13	3.96								
	84.1	109' 2"	33.28	14	4.27								
	83.6	109' 1"	33.25	15	4.57							57,500	26 081
	80.7	108' 5"	33.04	20	6.10								
	77.8	107' 5"	32.75	25	7.62	226,100	102 557	172,500	78 244				
	74.8	106' 3"	32.38	30	9.14	192,100	87 135	172,500	78 244				
	71.8	104' 9"	31.92	35	10.67	168,600	75 568	167,000	75 749				
	68.8	102' 11"	31.38	40	12.19	146,800	66 587	147,200	66 768				
	62.5	98' 5"	29.99	50	15.24	118,000	53 523	118,400	53 705	115,000	52 163		
	55.8	92' 5"	28.17	60	18.29	98,200	44 542	98,600	44 724	99,000	44 905		
	48.5	84' 8"	25.81	70	21.34	83,900	38 056	84,200	38 192	84,600	38 373		
	40.4	74' 8"	22.70	80	24.38	73,100	33 157	73,400	33 293	73,700	33 429		
	30.4	60' 5"	18.41	90	27.43	64,900	29 438	65,100	29 528	65,400	29 664	57,500	26 081
	15.8	37' 0"	11.28	100	30.48	51,900	23 541	52,400	23 768	53,300	24 176	55,800	25 310
110' (33.53 m)	85.2	119' 4"	36.37	13	3.96					114,900	52 117		
	84.7	119' 3"	36.35	14	4.27								
	84.2	119' 2"	36.32	15	4.57								
	81.5	118' 6"	36.13	20	6.10							57,400	26 036
	78.9	117' 8"	35.86	25	7.62	223,700	101 468	172,400	78 199				
	76.2	116' 7"	35.53	30	9.14	189,900	86 137	172,400	78 199				
	73.5	115' 2"	35.11	35	10.67	164,600	74 661	165,100	74 888				
	70.8	113' 7"	34.62	40	12.19	144,900	65 725	145,400	65 952				
	65.2	109' 7"	33.39	50	15.24	116,200	52 707	116,700	52 934	114,900	52 117		
	59.3	104' 3"	31.78	60	18.29	96,500	43 771	96,900	43 953	97,400	44 179		
	53.0	97' 7"	29.74	70	21.34	82,100	37 239	82,500	37 421	83,000	37 648		
	46.1	89' 1"	27.14	80	24.38	71,300	32 341	71,700	32 522	72,100	32 704		
	38.4	78' 1"	23.79	90	27.43	62,900	28 530	63,300	28 712	63,600	28 848	57,400	26,036
	29.0	63' 1"	19.22	100	30.48	56,400	25 582	56,700	25 718	57,000	25 854	57,200	25 945
	15.1	38' 4"	11.69	110	33.53	45,200	20 502	45,600	20 683	46,400	21 046	48,400	21 953

(continued)

⑧Consult manufacturer for tower heights greater than 162' 7½" (49.57 m).
①Load handled off main boom head sheaves with 10' (3.05 m) boom tip extension mounted on boom.
②Measured vertically from center of boom head sheave to base of turntable bearing mounting.
③Measured from center of tower base section to center of gravity of freely suspended load.

TG-1900 lifting crane capacities — with climbing frame

Refer to Notes page 15.

Boom				Load radius③		Capacities — Main boom only①							
	Angle	Boom point height②				4-part hoist line		3-part hoist line		2-part hoist line		1-part hoist line	
Length	Degree	Feet	meters	Feet	meters	Pounds	kilograms	Pounds	kilograms	Pounds	kilograms	Pounds	kilograms
120' (36.58 m)	85.6	129' 4"	39.43	13	3.96					114,800	52 072		
	85.1	129' 3"	39.41	14	4.27								
	84.6	129' 2"	39.38	15	4.57								
	82.2	128' 7"	39.20	20	6.10							57,400	26 036
	79.8	127' 10"	38.96	25	7.62	221,300	100 380	172,200	78 108				
	77.4	126' 10"	38.66	30	9.14	187,700	85 139	172,200	78 108				
	74.9	125' 7"	38.28	35	10.67	162,500	73 708	163,100	73 980				
	72.4	124' 2"	37.83	40	12.19	142,900	64 818	143,500	65 090				
	67.4	120' 6"	36.72	50	15.24	114,400	51 890	115,000	52 163	114,800	52 072		
	62.1	115' 9"	35.28	60	18.29	94,800	43 000	95,300	43 227	95,800	43 454		
	56.5	109' 10"	33.47	70	21.34	80,500	36 514	80,900	36 695	81,400	36 922		
	50.6	102' 5"	31.22	80	24.38	69,600	31 570	70,000	31 751	70,500	31 978		
	44.1	93' 2"	28.41	90	27.43	61,200	27 759	61,600	27 941	62,000	28 122	57,400	26 036
	36.7	81' 5"	24.82	100	30.48	54,500	24 720	54,900	24 902	55,200	25 038	55,600	25 219
	27.7	65' 7"	19.99	110	33.53	49,200	22 316	49,500	22 452	49,700	22 543	50,000	22 679
	14.4	39' 8"	12.09	120	36.58	39,500	17 916	39,800	18 052	40,400	18 325	42,000	19 050
130' (39.62 m)	85.5	139' 4"	42.47	14	4.27					114,700	52 027		
	85.1	139' 3"	42.44	15	4.57								
	82.8	138' 9"	42.28	20	6.10							57,300	25 990
	80.6	138' 0"	42.06	25	7.62								
	78.4	137' 1"	41.77	30	9.14	185,600	84 186	172,100	78 063				
	76.1	135' 11"	41.43	35	10.67	160,500	72 801	161,100	73 073				
	73.8	134' 7"	41.02	40	12.19	141,100	64 001	141,700	64 274	114,700	52 027		
	69.2	131' 3"	40.00	50	15.24	112,700	51 119	113,300	51 392	113,900	51 664		
	64.4	126' 11"	38.69	60	18.29	93,100	42 229	93,700	42 501	94,300	42 773		
	59.4	121' 7"	37.06	70	21.34	78,900	35 788	79,400	36 015	79,900	36 242		
	54.1	115' 1"	35.07	80	24.38	68,000	30 844	68,500	31 071	69,000	31 297		
	48.5	107' 0"	32.62	90	27.43	59,600	27 034	60,000	27 215	60,500	27 442	57,300	25 990
	42.3	97' 2"	29.61	100	30.48	52,900	23 995	53,300	24 176	53,700	24 357	54,100	24 539
	35.2	84' 8"	25.81	110	33.53	47,500	21 545	47,800	21 681	48,200	21 863	48,600	22 044
	26.6	68' 0"	20.73	120	36.58	42,800	19 413	43,100	19 549	43,400	19 685	43,700	19 821
	13.9	40' 11"	12.46	130	39.62	34,400	15 603	34,700	15 739	35,300	16 011	36,600	16 601
140' (42.67 m)	85.4	149' 3"	45.50	15	4.57					114,600	51 981		
	83.4	148' 9"	45.35	20	6.10							57,300	25 990
	81.3	148' 1"	45.14	25	7.62								
	79.2	147' 3"	44.88	30	9.14	183,400	83 188	172,000	78 017				
	77.1	146' 2"	44.56	35	10.67	158,500	71 894	159,200	72 211				
	75.0	145' 0"	44.18	40	12.19	139,200	63 140	139,800	63 412	114,600	51 981		
	70.7	141' 11"	43.24	50	15.24	111,000	50 348	111,600	50 620	112,300	50 938		
	66.3	137' 11"	42.05	60	18.29	91,500	41 503	92,100	41 775	92,700	42 048		
	61.8	133' 1"	40.56	70	21.34	77,300	35 062	77,900	35 334	78,500	35 607		
	57.0	127' 2"	38.76	80	24.38	66,500	30 163	67,000	30 390	67,600	30 662		
	52.0	120' 0"	36.59	90	27.43	58,000	26 308	58,500	26 535	59,100	26 807	57,300	25 990
	46.6	111' 5"	33.96	100	30.48	51,300	23 269	51,800	23 496	52,300	23 722	52,700	23 904
	40.7	100' 11"	30.77	110	33.53	45,800	20 774	46,300	21 001	46,700	21 182	47,200	21 409
	33.9	87' 10"	26.76	120	36.58	41,400	18 778	41,800	18 960	42,200	19 141	42,500	19 277
	25.6	70' 4"	21.43	130	39.62	37,300	16 918	37,600	17 055	37,900	17 191	38,100	17 281
	13.4	42' 1"	12.83	140	42.67	29,900	13 562	30,200	13 698	30,700	13 925	31,800	14 424
150' (45.72 m)	85.7	159' 4"	48.56	15	4.57					114,500	51 936		
	83.8	158' 10"	48.42	20	6.10							57,200	25 945
	81.9	158' 3"	48.22	25	7.62								
	79.9	157' 5"	47.98	30	9.14	181,200	82 190	171,800	77 927				
	78.0	156' 5"	47.68	35	10.67	156,500	70 987	157,200	71 304				
	76.0	155' 3"	47.33	40	12.19	137,300	62 278	138,000	62 595	114,500	51 936		
	72.1	152' 5"	46.46	50	15.24	109,300	49 577	110,000	49 895	110,600	50 167		
	68.0	148' 10"	45.35	60	18.29	89,900	40 777	90,600	41 095	91,200	41 367		
	63.8	144' 4"	43.99	70	21.34	75,700	34 336	76,400	34 654	77,000	34 926		
	59.5	138' 11"	42.34	80	24.38	65,000	29 483	65,600	29 755	66,200	30 027		
	54.9	132' 6"	40.38	90	27.43	56,500	25 627	57,100	25 900	57,700	26 172	57,200	25 945
	50.1	124' 10"	38.04	100	30.48	49,800	22 588	50,300	22 815	50,900	23 087	51,400	23 314
	44.9	115' 8"	35.25	110	33.53	44,300	20 094	44,800	20 320	45,300	20 547	45,800	20 774
	39.2	104' 7"	31.87	120	36.58	39,800	18 052	40,300	18 279	40,700	18 461	41,200	18 688
	32.7	90' 9"	27.67	130	39.62	35,900	16 283	36,300	16 465	36,700	16 646	37,100	16 828
	24.8	72' 7"	22.11	140	42.67	32,300	14 651	32,600	14 787	32,900	14 923	33,200	15 059
	12.9	43' 3"	13.18	150	45.72	25,900	11 748	26,200	11 884	26,600	12 065	27,500	12 473

(continued)

①Load handled off main boom head sheaves with 10' (3.05 m) boom tip extension mounted on boom.
②Measured vertically from center of boom head sheave to base of turntable bearing mounting.
③Measured from center of tower base section to center of gravity of freely suspended load.

TG-1900 lifting crane capacities — with climbing frame

Refer to Notes page 15.

Boom				Load radius③		Capacities — Main boom only①							
	Angle	Boom point height②				4-part hoist line		3-part hoist line		2-part hoist line		1-part hoist line	
Length	Degree	Feet	meters	Feet	meters	Pounds	kilograms	Pounds	kilograms	Pounds	kilograms	Pounds	kilograms
	84.2	168' 11"	51.48	20	6.10					114,400	51 890		
	82.4	168' 4"	51.30	25	7.62							57,200	25 945
	80.6	167' 7"	51.07	30	9.14								
	78.8	166' 8"	50.79	35	10.67	154,500	70 080	155,200	70 397				
	76.9	165' 7"	50.47	40	12.19	135,400	61 416	136,100	61 733	114,400	51 890		
	73.2	162' 11"	49.65	50	15.24	107,600	48 806	108,300	49 124	109,000	49 441		
	69.4	159' 6"	48.62	60	18.29	88,300	40 052	89,000	40 369	89,700	40 687		
160'	65.6	155' 5"	47.36	70	21.34	74,200	33 656	74,900	33 974	75,600	34 291		
(48.77 m)	61.6	150' 5"	45.84	80	24.38	63,500	28 803	64,100	29 075	64,800	29 392	57,200	25 945
	57.4	144' 6"	44.05	90	27.43	55,000	24 947	55,700	25 265	56,300	25 537	57,000	25 854
	53.0	137' 7"	41.93	100	30.48	48,300	21 908	48,900	22 180	49,500	22 452	50,200	22 770
	48.4	129' 5"	39.44	110	33.53	42,800	19 413	43,400	19 685	44,000	19 958	44,600	20 230
	43.4	119' 8"	36.49	120	36.58	38,300	17 372	38,800	17 599	39,400	17 871	39,900	18 098
	37.9	108' 1"	32.94	130	39.62	34,600	15 694	35,100	15 921	35,500	16 102	36,000	16 329
	31.6	93' 8"	28.55	140	42.67	30,900	14 016	31,400	14 242	31,800	14 424	32,200	14 605
	24.0	74' 9"	22.77	150	45.72	27,900	12 655	28,200	12 791	28,500	12 927	28,900	13 108
	12.5	44' 4"	13.52	160	48.77	22,300	10 115	22,600	10 251	22,900	10 387	23,700	10 750
	84.5	178' 11"	54.54	20	6.10					114,300	51 845		
	82.8	178' 5"	54.37	25	7.62							57,100	25 900
	81.1	177' 8"	54.16	30	9.14								
	79.4	176' 10"	53.90	35	10.67	152,400	69 127	153,300	69 535				
	77.7	175' 10"	53.59	40	12.19	133,500	60 554	134,300	60 917	114,300	51 845		
	74.2	173' 4"	52.83	50	15.24	105,800	47 990	106,600	48 352	107,400	48 715		
	70.7	170' 2"	51.87	60	18.29	86,700	39 326	87,500	39 689	88,200	40 006		
	67.1	166' 4"	50.69	70	21.34	72,700	32 976	73,400	33 293	74,200	33 656		
170'©	63.4	161' 8"	49.28	80	24.38	62,000	28 122	62,700	28 440	63,400	28 757	57,100	25 900
(51.82 m)	59.5	156' 3"	47.62	90	27.43	53,600	24 312	54,300	24 630	55,000	24 947	55,700	25 265
	55.5	149' 11"	45.68	100	30.48	46,900	21 273	47,600	21 591	48,200	21 863	48,900	22 180
	51.3	142' 6"	43.42	110	33.53	41,400	18 778	42,000	19 050	42,700	19 368	43,300	19 640
	46.9	133' 10"	40.78	120	36.58	36,900	16 737	37,500	17 009	38,100	17 281	38,700	17 554
	42.1	123' 7"	37.68	130	39.62	33,100	15 013	33,700	15 286	34,200	15 512	34,800	15 785
	36.8	111' 5"	33.97	140	42.67	29,700	13 471	30,200	13 698	30,700	13 925	31,200	14 152
	30.7	96' 6"	29.40	150	45.72	26,600	12 065	27,000	12 246	27,400	12 428	27,800	12 609
	23.2	76' 10"	23.41	160	48.77	24,000	10 886	24,300	11 022	24,600	11 158	25,000	11 339
	12.1	45' 5"	13.85	170	51.82	19,000	8 618	19,200	8 708	19,600	8 890	20,200	9 162
	84.8	189' 0"	57.60	20	6.10					114,200	51 800		
	83.2	188' 6"	57.45	25	7.62							57,100	25 900
	81.6	187' 10"	57.24	30	9.14								
	80.0	187' 0"	57.00	35	10.67	150,400	68 220	151,200	68 583				
	78.4	186' 1"	56.71	40	12.19	131,600	59 692	132,400	60 055	114,200	51 800		
	75.1	183' 8"	55.99	50	15.24	104,100	47 218	104,900	47 581	105,800	47 990		
	71.8	180' 9"	55.08	60	18.29	85,100	38 600	85,900	38 963	86,700	39 326		
	68.4	177' 1"	53.98	70	21.34	71,100	32 250	71,900	32 613	72,700	32 976		
180'©	65.0	172' 10"	52.67	80	24.38	60,500	27 442	61,300	27 805	62,100	28 168	57,100	25 900
(54.86 m)	61.4	167' 9"	51.13	90	27.43	52,200	23 677	52,900	23 995	53,700	24 357	54,400	24 675
	57.7	161' 10"	49.33	100	30.48	45,500	20 638	46,200	20 955	46,900	21 273	47,700	21 636
	53.8	155' 1"	47.26	110	33.53	40,000	18 143	40,700	18 461	41,400	18 778	42,100	19 096
	49.8	147' 2"	44.86	120	36.58	35,500	16 102	36,100	16 374	36,800	16 692	37,400	16 964
	45.5	138' 1"	42.08	130	39.62	31,700	14 378	32,300	14 651	32,900	14 923	33,500	15 195
	40.8	127' 5"	38.83	140	42.67	28,500	12 927	29,100	13 199	29,600	13 426	30,200	13 698
	35.7	114' 9"	34.96	150	45.72	25,300	11 475	25,800	11 702	26,300	11 929	26,900	12 201
	29.8	99' 2"	30.22	160	48.77	22,600	10 251	23,100	10 477	23,500	10 659	23,900	10 840
	22.6	78' 10"	24.03	170	51.82	20,400	9 253	20,700	9 389	21,100	9 570	21,400	9 706
	11.8	46' 6"	14.17	180	54.86	16,000	7 257	16,200	7 348	16,500	7 484	17,100	7 756

(continued)

©Consult manufacturer for boom lengths greater than 170' (51.82 m).
①Load handled off main boom head sheaves with 10' (3.05 m) boom tip extension mounted on boom.
②Measured vertically from center of boom head sheave to base of turntable bearing mounting.
③Measured from center of tower base section to center of gravity of freely suspended load.

TG-1900 lifting crane capacities — with climbing frame

Refer to **Notes** page 15.

Boom				Load radius ③		Capacities — Main boom only ①							
	Angle	Boom point height ②				4-part hoist line		3-part hoist line		2-part hoist line		1-part hoist line	
Length	Degree	Feet	meters	Feet	meters	Pounds	kilograms	Pounds	kilograms	Pounds	kilograms	Pounds	kilograms
	85.1	199' 0"	60.66	20	6.10					114,100	51 754		
	83.6	198' 6"	60.51	25	7.62					↑	↑	57,000	25 854
	82.1	197' 11"	60.32	30	9.14							↑	↑
	80.5	197' 2"	60.09	35	10.67	139,400	63 230	140,300	63 639	↓	↓		
	79.0	196' 3"	59.81	40	12.19	129,600	58 785	130,500	59 193	114,100	51 754		
	75.9	194' 0"	59.14	50	15.24	102,400	46 447	103,300	46 856	104,100	47 218		
	72.8	191' 3"	58.28	60	18.29	83,500	37 874	84,300	38 237	85,200	38 646		
	69.6	187' 10"	57.25	70	21.34	69,600	31 570	70,500	31 978	71,300	32 341		
	66.4	183' 9"	56.01	80	24.38	59,100	26 807	59,900	27 170	60,700	27 533	57,000	25 854
190'©	63.0	179' 0"	54.57	90	27.43	50,800	23 042	51,600	23 405	52,400	23 768	53,200	24 131
(57.91 m)	59.6	173' 7"	52.90	100	30.48	44,100	20 003	44,900	20 366	45,700	20 729	46,400	21 046
	56.0	167' 3"	50.98	110	33.53	38,600	17 508	39,400	17,871	40 100	18 189	40,900	18 551
	52.3	160' 0"	48.78	120	36.58	34,100	15 467	34,800	15 785	35,500	16 102	36,300	16 465
	48.4	151' 9"	46.25	130	39.62	30,300	13 743	31,000	14 061	31,700	14 378	32,400	14 696
	44.2	142' 2"	43.34	140	42.67	27,100	12 292	27,800	12 609	28,400	12 882	29,000	13 154
	39.7	131' 1"	39.95	150	45.72	24,200	10 976	24,800	11 249	25,400	11 521	25,900	11 748
	34.7	117' 11"	35.93	160	48.77	21,400	9 706	21,900	9 933	22,500	10 205	23,000	10 432
	29.0	101' 9"	31.02	170	51.82	19,100	8 663	19,500	8 845	20,000	9 071	20,400	9 253
	22.0	80' 9"	24.63	180	54.86	17,200	7 801	17,500	7 937	17,900	8 119	18,200	8 255
	11.5	47' 6"	14.48	190	57.91	13,200	5 987	13,400	6 078	13,700	6 214	14,200	6 441
	85.4	209' 1"	63.72	20	6.10					114,000	51 709		
	83.9	208' 7"	63.58	25	7.62					↑	↑	57,000	25 854
	82.5	208' 0"	63.40	30	9.14							↑	↑
	81.0	207' 3"	63.18	35	10.67					↓	↓		
	79.6	206' 5"	62.92	40	12.19	125,300	56.835	126,300	57 288	114,000	51,709		
	76.6	204' 4"	62.27	50	15.24	100,600	45 631	101,600	46 084	102,500	46 493		
	73.7	201' 8"	61.47	60	18.29	81,900	37 149	82,800	37 557	83,700	37 965		
	70.7	198' 5"	60.49	70	21.34	68,100	30 889	69,000	31 297	69,900	31 706		
	67.6	194' 8"	59.32	80	24.38	57,600	26 126	58,500	26 535	59,400	26 943	57,000	25 854
200'©	64.5	190' 2"	57.97	90	27.43	49,300	22 362	50,200	22 770	51,100	23 178	51,900	23 541
(60.96 m)	61.2	185' 1"	56.41	100	30.48	42,700	19 368	43,500	19 731	44,400	20 139	45,200	20 502
	57.9	179' 2"	54.62	110	33.53	37,300	16 918	38,100	17 281	38,900	17 644	39,700	18 007
	54.5	172' 6"	52.58	120	36.58	32,700	14 832	33,500	15 195	34,300	15 558	35,100	15 921
	50.9	164' 10"	50.25	130	39.62	29,000	13 154	29,700	13 471	30,400	13 789	31,200	14 152
	47.1	156' 2"	47.60	140	42.67	25,800	11 702	26,500	12 020	27,200	12 337	27,900	12 655
	43.0	146' 2"	44.56	150	45.72	23,000	10 432	23,700	10 750	24,300	11 022	25,000	11 339
	38.6	134' 7"	41.03	160	48.77	20,300	9 207	20,900	9 480	21,500	9 752	22,100	10 024
	33.8	121' 0"	36.87	170	51.82	17,900	8 119	18,400	8 346	18,900	8 572	19,500	8 845
	28.2	104' 4"	31.80	180	54.86	15,800	7 166	16,300	7 393	16,700	7 574	17,200	7 801
	21.4	82' 8"	25.21	190	57.91	14,200	6 441	14,500	6 577	14,900	6 758	15,200	6 894
	11.2	48' 6"	14.78	200	60.96	10,600	4 808	11,200	5 080	11,100	5 034	11,500	5 216

©Consult manufacturer for boom lengths greater than 170' (51.82 m).
①Load handled off main boom head sheaves with 10' (3.05 m) boom tip extension mounted on boom.
②Measured vertically from center of boom head sheave to base of turntable bearing mounting.
③Measured from center of tower base section to center of gravity of freely suspended load.

TG-1900 lifting crane capacities — pedestal, bogie or gantry mounted

Refer to **Notes** page 15.

Mounting — pedestal, bogie, or gantry.

Mast — 43′ 0⅛″ (13.11 m) over-all height.

Boom — tubular; 75″ x 75″ (1.91 x 1.91 m) with 40′ (12.19 m) base section, 40′ (12.19 m) top section, 1¾″ (44 mm) diameter boom pendants, with or without boom tip extension.

Boom tip extension — tubular; 14,800# (6 713 kg) rating; 10′ (3.05 m) long.

Counterweights — Total 94,400# (42 820 kg). Includes one fixed counterweight — 23,600# (10 705 kg) plus one moving counterweight — 70,800# (32 115 kg) consisting of three sections weighing 23,600# (10 705 kg) each.

Boom				Load radius③		Capacities — Main boom only①							
	Angle	Boom point height②				4-part hoist line		3-part hoist line		2-part hoist line		1-part hoist line	
Length	Degree	Feet	meters	Feet	meters	Pounds	kilograms	Pounds	kilograms	Pounds	kilograms	Pounds	kilograms
60′ (24.38 m)	85.5	89′ 6″	27.27	10	3.05					115,200	52 253		
	84.8	89′ 5″	27.25	11	3.35								
	84.1	89′ 4″	27.22	12	3.66								
	83.4	89′ 2″	27.19	13	3.96								
	82.7	89′ 1″	27.15	14	4.27							57,600	26 126
	81.9	88′ 11″	27.11	15	4.57								
	78.3	88′ 1″	26.84	20	6.10	230,400	104 507	172,800	78 380				
	74.6	86′ 10″	26.48	25	7.62	230,400	104 507						
	70.9	85′ 4″	26.00	30	9.14	217,600	98 701						
	67.0	83′ 5″	25.42	35	10.67	186,400	84 549	172,800	78 380				
	63.1	81′ 1″	24.71	40	12.19	162,600	73 754	163,000	73 935				
	54.7	75′ 0″	22.87	50	15.24	128,900	58 468	129,200	58 604	115,200	52 253		
	45.4	68′ 8″	20.31	60	18.29	106,300	48 216	106,600	48 352	106,800	48 443		
	34.1	54′ 8″	16.65	70	21.34	90,200	40 914	90,400	41 004	90,700	41 140		
	17.7	34′ 1″	10.38	80	24.38	69,000	31 297	69,700	31 615	71,100	32 250	57,600	26 126
90′ (27.43 m)	85.4	99′ 5″	30.31	11	3.35					115,100	52 208		
	84.8	99′ 4″	30.28	12	3.66								
	84.1	99′ 3″	30.25	13	3.96								
	83.5	99′ 2″	30.22	14	4.27							57,500	26 081
	82.8	99′ 0″	30.18	15	4.57								
	79.6	98′ 3″	29.95	20	6.10	230,300	104 462	172,700	78 335				
	76.4	97′ 2″	29.62	25	7.62	230,300	104 462						
	73.1	95′ 10″	29.21	30	9.14	216,400	98 157						
	69.7	94′ 2″	28.69	35	10.67	185,100	83 959	172,700	78 335				
	66.3	92′ 1″	28.08	40	12.19	161,300	73 164	161,700	73 345				
	59.1	86′ 11″	26.50	50	15.24	127,500	57 833	127,900	58 014	115,100	52 208		
	51.4	80′ 0″	24.39	60	18.29	104,800	47 536	105,100	47 672	105,500	47 854		
	42.6	70′ 8″	21.55	70	21.34	88,600	40 188	88,900	40 324	89,100	40 415		
	32.1	57′ 7″	17.56	80	24.38	76,500	34 699	76,700	34 790	77,000	34 926		
	16.7	35′ 7″	10.84	90	27.43	59,700	27 079	60,300	27 351	61,400	27 850	57,500	26 081
100′ (30.48 m)	85.3	109′ 5″	33.34	12	3.66					115,000	52 163		
	84.7	109′ 4″	33.31	13	3.96								
	84.1	109′ 2″	33.28	14	4.27								
	83.6	109′ 1″	33.25	15	4.57							57,500	26 081
	80.7	108′ 5″	33.04	20	6.10								
	77.8	107′ 5″	32.75	25	7.62	230,100	104 371	172,500	78 244				
	74.8	106′ 3″	32.38	30	9.14	215,100	97 567	172,500	78 244				
	71.8	104′ 9″	31.92	35	10.67	183,900	83 415	172,500	78 244				
	68.8	102′ 11″	31.38	40	12.19	160,100	72 620	160,500	72 801				
	62.5	98′ 5″	29.99	50	15.24	126,300	57 288	126,700	57 470	115,000	52 163		
	55.8	92′ 5″	28.17	60	18.29	103,500	46 946	103,900	47 128	104,300	47 309		
	48.5	84′ 8″	25.81	70	21.34	87,100	39 507	87,500	39 689	87,900	39 870		
	40.4	74′ 6″	22.70	80	24.38	74,900	33 974	75,200	34 110	75,600	34 291		
	30.4	60′ 5″	18.41	90	27.43	65,600	29 755	65,800	29 846	66,100	29 982	57,500	26 081
	15.8	37′ 0″	11.28	100	30.48	51,900	23 541	52,400	23 768	53,300	24 176	55,800	25 310
110′ (33.53 m)	85.2	119′ 4″	36.37	13	3.96					114,900	52 117		
	84.7	119′ 3″	36.35	14	4.27								
	84.2	119′ 2″	36.32	15	4.57								
	81.5	118′ 6″	36.13	20	6.10							57,400	26 036
	78.9	117′ 8″	35.86	25	7.62	229,900	104 280	172,400	78 199				
	76.2	116′ 7″	35.53	30	9.14	214,000	97 068	172,400	78 199				
	73.5	115′ 2″	35.11	35	10.67	182,700	82 871	172,400	78 199				
	70.8	113′ 7″	34.62	40	12.19	158,900	72 075	159,400	72 302				
	65.2	109′ 7″	33.39	50	15.24	125,100	56 744	125,600	56 971	114,900	52 117		
	59.3	104′ 3″	31.78	60	18.29	102,300	46 402	102,700	46 583	103,200	46 810		
	53.0	97′ 7″	29.74	70	21.34	85,900	38 963	86,300	39 145	86,700	39 326		
	46.1	89′ 1″	27.14	80	24.38	73,600	33 384	74,000	33 565	74,300	33 701		
	38.4	78′ 1″	23.79	90	27.43	64,100	29 075	64,400	29 211	64,800	29 392		
	29.0	63′ 1″	19.22	100	30.48	56,700	25 718	56,900	25 809	57,200	25 945	57,400	26 036
	15.1	38′ 4″	11.69	110	33.53	45,200	20 502	45,600	20 683	46,400	21 046	48,400	21 953

(continued)

①Load handled off main boom head sheaves with 10′ (3.05 m) boom tip extension mounted on boom.
②Measured vertically from center of boom head sheave to base of turntable bearing mounting.
③Measured from centerline of rotation to center of gravity of freely suspended load.

TG-1900 lifting crane capacities — pedestal, bogie, or gantry mounted

Refer to Notes page 15.

Boom				Load radius③		Capacities — Main boom only①							
	Angle	Boom point height②				4-part hoist line		3-part hoist line		2-part hoist line		1-part hoist line	
Length	Degree	Feet	meters	Feet	meters	Pounds	kilograms	Pounds	kilograms	Pounds	kilograms	Pounds	kilograms
	85.6	129' 4"	39.43	13	3.96					114,800	52 072		
	85.1	129' 3"	39.41	14	4.27								
	84.6	129' 2"	39.38	15	4.57								
	82.2	128' 7"	39.20	20	6.10							57,400	26 036
	79.8	127' 10"	38.98	25	7.62	229,700	104 190	172,200	78 108				
	77.4	126' 10"	38.68	30	9.14	212,900	96 569	172,200	78 108				
	74.9	125' 7"	38.28	35	10.67	181,600	82 372	172,200	78 108				
120'	72.4	124' 2"	37.83	40	12.19	157,800	71 576	158,300	71 803				
(36.58 m)	67.4	120' 6"	36.72	50	15.24	123,900	56 200	124,500	56 472	114,800	52 072		
	62.1	115' 9"	35.28	60	18.29	101,100	45 858	101,600	46 084	102,100	46 311		
	56.5	109' 10"	33.47	70	21.34	84,700	38 419	85,100	38 600	85,600	38 827		
	50.6	102' 5"	31.22	80	24.38	72,300	32 794	72,800	33 021	73,200	33 202		
	44.1	93' 2"	28.41	90	27.43	62,800	28 485	63,200	28 667	63,600	28 848	57,400	26 036
	36.7	81' 5"	24.82	100	30.48	55,200	25 038	55,600	25 219	55,900	25 355	56,200	25 491
	27.7	65' 7"	19.99	110	33.53	49,200	22 316	49,500	22 452	49,700	22 543	50,000	22 679
	14.4	39' 8"	12.09	120	36.58	39,500	17 916	39,800	18 052	40,400	18 325	42,000	19 050
	85.5	139' 4"	42.47	14	4.27					114,700	52 027		
	85.1	139' 3"	42.44	15	4.57								
	82.8	138' 9"	42.28	20	6.10							57,300	25 990
	80.6	138' 0"	42.06	25	7.62								
	78.4	137' 1"	41.77	30	9.14	211,900	96 116	172,100	78 063				
	76.1	135' 11"	41.43	35	10.67	180,600	81 918	172,100	78 063				
	73.8	134' 7"	41.02	40	12.19	156,700	71 077	157,300	71 350				
130'	69.2	131' 3"	40.00	50	15.24	122,900	55 746	123,400	55 973	114,700	52 027		
(39.62 m)	64.4	126' 11"	38.69	60	18.29	100,000	45 359	100,500	45 586	101,100	45 858		
	59.4	121' 7"	37.06	70	21.34	83,500	37 874	84,100	38 147	84,600	38 373		
	54.1	115' 1"	35.07	80	24.38	71,100	32 250	71,600	32 477	72,200	32 749		
	48.5	107' 0"	32.62	90	27.43	61,500	27 895	62,000	28 122	62,500	28 349	57,300	25 990
	42.3	97' 2"	29.61	100	30.48	53,900	24 448	54,300	24 630	54,800	24 856	55,200	25 038
	35.2	84' 8"	25.81	110	33.53	47,800	21 681	48,100	21 817	48,500	21 999	48,900	22 180
	26.6	68' 0"	20.73	120	36.58	42,800	19 413	43,100	19 549	43,400	19 685	43,700	19 821
	13.9	40' 11"	12.46	130	39.62	34,400	15 603	34,700	15 739	35,300	16 011	36,600	16 601
	85.4	149' 3"	45.50	15	4.57					114,600	51 981		
	83.4	148' 9"	45.35	20	6.10							57,300	25 990
	81.3	148' 1"	45.14	25	7.62								
	79.2	147' 3"	44.88	30	9.14	210,800	95 617	172,000	78 017				
	77.1	146' 2"	44.56	35	10.67	179,500	81 419	172,000	78 017				
	75.0	145' 0"	44.18	40	12.19	155,600	70 578	156,300	70 896				
	70.7	141' 11"	43.24	50	15.24	121,800	55 247	122,400	55 519	114,600	51 981		
140'	66.3	137' 11"	42.05	60	18.29	98,900	44 860	99,500	45 132	100,100	45 404		
(42.67 m)	61.8	133' 1"	40.56	70	21.34	82,400	37 376	83,000	37 648	83,600	37 920		
	57.0	127' 2"	38.76	80	24.38	70,000	31 751	70,600	32 023	71,100	32 250		
	52.0	120' 0"	36.59	90	27.43	60,400	27 396	60,900	27 623	61,400	27 850	57,300	25 990
	46.6	111' 5"	33.96	100	30.48	52,700	23 904	53,200	24 131	53,700	24 357	54,200	24 584
	40.7	100' 11"	30.77	110	33.53	46,500	21 092	46,900	21 273	47,400	21 500	47,800	21 681
	33.9	87' 10"	26.76	120	36.58	41,400	18 778	41,800	18 960	42,200	19 141	42,500	19 277
	25.6	70' 4"	21.43	130	39.62	37,300	16 918	37,600	17 055	37,900	17 191	38,100	17 281
	13.4	42' 1"	12.83	140	42.67	29,900	13 562	30,200	13 698	30,700	13 925	31,800	14 424
	85.7	159' 4"	48.56	15	4.57					114,500	51 936		
	83.8	158' 10"	48.42	20	6.10							57,200	25 945
	81.9	158' 3"	48.22	25	7.62								
	79.9	157' 5"	47.98	30	9.14	209,700	95 118	171,800	77 927				
	78.0	156' 5"	47.68	35	10.67	178,400	80 920	171,800	77 927				
	76.0	155' 3"	47.33	40	12.19	154,600	70 125	155,300	70 442				
	72.1	152' 5"	46.46	50	15.24	120,700	54 748	121,400	55 066	114,500	51 936		
	68.0	148' 10"	45.35	60	18.29	97,800	44 361	98,500	44 678	99,200	44 996		
150'	63.8	144' 4"	43.99	70	21.34	81,300	36 877	82,000	37 194	82,600	37 466		
(45.72 m)	59.5	138' 11"	42.34	80	24.38	68,900	31 252	69,500	31 524	70,200	31 842		
	54.9	132' 6"	40.38	90	27.43	59,300	26 898	59,800	27 124	60,400	27 396	57,200	25 945
	50.1	124' 10"	38.04	100	30.48	51,500	23 360	52,100	23 632	52,700	23 904	53,200	24 131
	44.9	115' 8"	35.25	110	33.53	45,300	20 547	45,800	20 774	46,300	21 001	46,800	21 228
	39.2	104' 7"	31.87	120	36.58	40,100	18 189	40,600	18 415	41,100	18 642	41,500	18 824
	32.7	90' 9"	27.67	130	39.62	35,900	16 283	36,300	16 465	36,700	16 646	37,100	16 828
	24.8	72' 7"	22.11	140	42.67	32,300	14 651	32,600	14 787	32,900	14 923	33,200	15 059
	12.9	43' 3"	13.18	150	45.72	25,900	11 748	26,200	11 884	26,600	12 065	27,500	12 473

(continued)

①Load handled off main boom head sheaves with 10' (3.05 m) boom tip extension mounted on boom.
②Measured vertically from center of boom head sheave to base of turntable bearing mounting.
③Measured from centerline of rotation to center of gravity of freely suspended load.

TG-1900 lifting crane capacities — pedestal, bogie, or gantry mounted

Refer to **Notes** page 15.

Boom				Load radius③		Capacities — Main boom only①							
	Angle	Boom point height②				4-part hoist line		3-part hoist line		2-part hoist line		1-part hoist line	
Length	Degree	Feet	meters	Feet	meters	Pounds	kilograms	Pounds	kilograms	Pounds	kilograms	Pounds	kilograms
160' (48.77 m)	84.2	168' 11"	51.48	20	6.10					114,400	51 890		
	82.4	168' 4"	51.30	25	7.62					↑	↑	57,200	25 945
	80.6	167' 7"	51.07	30	9.14							↑	↑
	78.8	166' 8"	50.79	35	10.67	172,400	78 199	171,700	77 881				
	76.9	165' 7"	50.47	40	12.19	149,600	67 857	153,500	69 626	↓	↓		
	73.2	162' 11"	49.65	50	15.24	118,800	53 886	120,400	54 612	114,400	51 890		
	69.4	159' 6"	48.62	60	18.29	96,800	43 907	97,500	44 225	98,200	44 542		
	65.6	155' 5"	47.36	70	21.34	80,300	36 423	81,000	36 740	81,700	37 058		
	61.6	150' 5"	45.84	80	24.38	67,800	30 753	68,500	31 071	69,200	31 388		
	57.4	144' 6"	44.05	90	27.43	58,200	26 399	58,800	26 671	59,500	26 988	57,200	25 945
	53.0	137' 7"	41.93	100	30.48	50,400	22 861	51,000	23 133	51,700	23 450	52,300	23 722
	48.4	129' 5"	39.44	110	33.53	44,100	20 003	44,700	20 275	45,300	20 547	45,900	20 819
	43.4	119' 8"	36.49	120	36.58	39,000	17 690	39,500	17 916	40,000	18 143	40,500	18 370
	37.9	108' 1"	32.94	130	39.62	34,600	15 694	35,100	15 921	35,600	16 147	36,100	16 374
	31.6	93' 8"	28.55	140	42.67	30,900	14 016	31,400	14 242	31,800	14 424	32,200	14 605
	24.0	74' 9"	22.77	150	45.72	27,900	12 655	28,200	12 791	28,500	12 927	28;900	13 108
	12.5	44' 4"	13.52	160	48.77	22,300	10 115	22,600	10 251	22,900	10 387	23,700	10 750
170' (51.82 m)	84.5	178' 11"	54.54	20	6.10					114,300	51 845		
	82.8	178' 5"	54.37	25	7.62					↑	↑	57,100	25 900
	81.1	177' 8"	54.16	30	9.14							↑	↑
	79.4	176' 10"	53.90	35	10.67	165,600	75 114	166,400	75 477				
	77.7	175' 10"	53.59	40	12.19	144,000	65 317	147,700	66 995	↓	↓		
	74.2	173' 4"	52.83	50	15.24	114,000	51 709	116,600	52 888	114,300	51 845		
	70.7	170' 2"	51.87	60	18.29	94,400	42 819	96,500	43 771	97,300	44 134		
	67.1	166' 4"	50.69	70	21.34	79,200	35 924	80,000	36 287	80,700	36 604		
	63.4	161' 8"	49.28	80	24.38	66,800	30 299	67,500	30 617	68,300	30 980		
	59.5	156' 3"	47.62	90	27.43	57,100	25 900	57,800	26 217	58,500	26 535	57,100	25 900
	55.5	149' 11"	45.68	100	30.48	49,400	22 407	50,000	22 679	50,700	22 997	51,400	23 314
	51.3	142' 6"	43.42	110	33.53	43,000	19 504	43,700	19 821	44,300	20 094	45,000	20 411
	46.9	133' 10"	40.78	120	36.58	37,800	17 145	38,400	17 417	39,000	17 690	39,600	17 962
	42.1	123' 7"	37.68	130	39.62	33,500	15 195	34,000	15 422	34,600	15 694	35,100	15 921
	36.8	111' 5"	33.97	140	42.67	29,700	13 471	30,200	13 698	30,700	13 925	31,200	14 152
	30.7	96' 6"	29.40	150	45.72	26,600	12 065	27,000	12 246	27,400	12 428	27,800	12 609
	23.2	76' 10"	23.41	160	48.77	24,000	10 886	24,300	11 022	24,600	11 158	25,000	11 339
	12.1	45' 5"	13.85	170	51.82	19,000	8 618	19,200	8 708	19,600	8 890	20,200	9 162
180' (54.86 m)	84.8	189' 0"	57.60	20	6.10					114,200	51 800		
	83.2	188' 6"	57.45	25	7.62					↑	↑	57,100	25 900
	81.6	187' 10"	57.24	30	9.14							↑	↑
	80.0	187' 0"	57.00	35	10.67	152,500	69 172	153,400	69 581				
	78.4	186' 1"	56.71	40	12.19	138,900	63 003	142,500	64 636	↓	↓		
	75.1	183' 8"	55.99	50	15.24	109,600	49 713	112,200	50 893	114,200	51 800		
	71.8	180' 9"	55.08	60	18.29	90,500	41 050	92,600	42 002	96,000	43 544		
	68.4	177' 1"	53.98	70	21.34	76,900	34 881	78,700	35 697	79,800	36 196		
	65.0	172' 10"	52.67	80	24.38	65,800	29 846	66,500	30 163	67,300	30 526		
	61.4	167' 9"	51.13	90	27.43	56,100	25 446	56,800	25 764	57,600	26 126	57,100	25 900
	57.7	161' 10"	49.33	100	30.48	48,300	21 908	49,000	22 226	49,800	22 588	50,500	22 906
	53.8	155' 1"	47.26	110	33.53	42,000	19 050	42,700	19 368	43,400	19 685	44,100	20 003
	49.8	147' 2"	44.86	120	36.58	36,700	16 646	37,400	16 964	38,000	17 236	38,700	17 554
	45.5	138' 1"	42.08	130	39.62	32,300	14 651	32,900	14 923	33,600	15 240	34,200	15 512
	40.8	127' 5"	38.83	140	42.67	28,600	12 972	29,100	13 199	29,700	13 471	30,300	13 743
	35.7	114' 9"	34.96	150	45.72	25,300	11 475	25,800	11 702	26,300	11 929	26,900	12 201
	29.8	99' 2"	30.22	160	48.77	22,600	10 251	23,100	10 477	23,500	10 659	23,900	10 840
	22.6	78' 10"	24.03	170	51.82	20,400	9 253	20,700	9 389	21,100	9 570	21,400	9 706
	11.8	46' 6"	14.17	180	54.86	18,000	7 257	18,200	7 348	18,500	7 484	17,100	7 756

(continued)

①Load handled off main boom head sheaves with 10' (3.05 m) boom tip extension mounted on boom.
②Measured vertically from center of boom head sheave to base of turntable bearing mounting.
③Measured from centerline of rotation to center of gravity of freely suspended load.

TG-1900 lifting crane capacities — pedestal, bogie, or gantry mounted

Refer to **Notes** page 15.

Boom				Load radius②		Capacities — Main boom only①							
	Angle	Boom point height③				4-part hoist line		3-part hoist line		2-part hoist line		1-part hoist line	
Length	Degree	Feet	meters	Feet	meters	Pounds	kilograms	Pounds	kilograms	Pounds	kilograms	Pounds	kilograms
	85.1	199' 0"	60.66	20	6.10					114,100	51 754		
	83.8	198' 6"	60.51	25	7.62					↑	↑	57,000	25 854
	82.1	197' 11"	60.32	30	9.14							↑	↑
	80.5	197' 2"	60.09	35	10.67	139,400	63 230	140,300	63 639	↓	↓		
	79.0	196' 3"	59.81	40	12.19	134,200	60 872	137,700	62 459	114,100	51 754		
	75.9	194' 0"	59.14	50	15.24	105,500	47 854	108,000	48 987	112,500	51 029		
	72.8	191' 3"	58.28	60	18.29	86,900	39 417	88,900	40 324	92,200	41 821		
	69.6	187' 10"	57.25	70	21.34	73,700	33 429	75,400	34 200	78,100	35 425		
	66.4	183' 9"	56.01	80	24.38	63,700	28 893	65,200	29 574	66,400	30 118		
190' (57.91 m)	63.0	179' 0"	54.57	90	27.43	55,000	24 947	55,800	25 310	56,700	25 718	57,000	25 854
	59.6	173' 7"	52.90	100	30.48	47,300	21 454	48,000	21 772	48,800	22 135	49,600	22 498
	56.0	167' 3"	50.98	110	33.53	40,900	18 551	41,700	18 914	42,400	19 232	43,200	19 595
	52.3	160' 0"	48.78	120	36.58	35,700	16 193	36,400	16 510	37,100	16 828	37,800	17 145
	48.4	151' 9"	46.25	130	39.62	31,200	14 152	31,900	14 469	32,600	14 787	33,300	15 104
	44.2	142' 2"	43.34	140	42.67	27,500	12 473	28,100	12 745	28,700	13 018	29,400	13 335
	39.7	131' 1"	39.95	150	45.72	24,200	10 976	24,800	11 249	25,400	11 521	25,900	11 748
	34.7	117' 11"	35.93	160	48.77	21,400	9 706	21,900	9 933	22,500	10 205	23,000	10 432
	29.0	101' 9"	31.02	170	51.82	19,100	8 663	19,500	8 845	20,000	9 071	20,400	9 253
	22.0	80' 9"	24.63	180	54.86	17,200	7 801	17,500	7 937	17,900	8 119	18,200	8 255
	11.5	47' 6"	14.48	190	57.91	13,200	5 987	13,400	6 078	13,700	6 214	14,200	6 441
	85.4	209' 1"	63.72	20	6.10					114,000	51 709		
	83.9	208' 7"	63.58	25	7.62					↑	↑	57,000	25 854
	82.5	208' 0"	63.40	30	9.14							↑	↑
	81.0	207' 3"	63.18	35	10.67					↓	↓		
	79.6	206' 5"	62.92	40	12.19	125,300	56 835	126,300	57 288	114,000	51 709		
	76.6	204' 4"	62.27	50	15.24	101,600	46 084	104,200	47 264	108,600	49 260		
	73.7	201' 8"	61.47	60	18.29	83,400	37 829	85,500	38 782	88,800	40 279		
	70.7	198' 5"	60.49	70	21.34	70,600	32 023	72,300	32 794	74,900	33 974		
	67.6	194' 8"	59.32	80	24.38	60,900	27 623	62,400	28 304	64,600	29 302	57,000	25 854
200' (60.96 m)	64.5	190' 2"	57.97	90	27.43	53,200	24 131	54,600	24 766	55,700	25 265	56,600	25 673
	61.2	185' 1"	56.41	100	30.48	46,200	20 955	47,100	21 364	47,900	21 727	48,800	22 135
	57.9	179' 2"	54.62	110	33.53	39,900	18 098	40,700	18 461	41,500	18 824	42,300	19 186
	54.5	172' 6"	52.58	120	36.58	34,600	15 694	35,400	16 057	36,200	16 420	36,900	16 737
	50.9	164' 10"	50.25	130	39.62	30,200	13 698	30,900	14 016	31,700	14 378	32,400	14 696
	47.1	156' 2"	47.60	140	42.67	26,400	11 974	27,100	12 292	27,800	12 609	28,500	12 927
	43.0	146' 2"	44.56	150	45.72	23,100	10 477	23,700	10 750	24,400	11 067	25,000	11 339
	38.6	134' 7"	41.03	160	48.77	20,300	9 207	20,900	9 480	21,500	9 752	22,100	10 024
	33.8	121' 0"	36.87	170	51.82	17,900	8 119	18,400	8 346	18,900	8 572	19,500	8 845
	28.2	104' 4"	31.80	180	54.86	15,800	7 166	16,300	7 393	16,700	7 574	17,200	7 801
	21.4	82' 8"	25.21	190	57.91	14,200	6 441	14,500	6 577	14,900	6 758	15,200	6 894
	11.2	48' 6"	14.78	200	60.96	10,600	4 808	10,800	4 898	11,100	5 034	11,500	5 216

①Load handled off main boom head sheaves with 10' (3.05 m) boom tip extension mounted on boom.
②Measured vertically from center of boom head sheave to base of turntable bearing mounting.
③Measured from centerline of rotation to center of gravity of freely suspended load.

TG-1900 lifting crane capacities — off boom tip extension① only

Mounting — pedestal, bogie, gantry or free standing tower with or without climbing frame.

Mast — 43′ 0⅛″ (13.11 m) over-all height.

Boom — tubular; 75″ x 75″ (1.91 x 1.91 m) with 40′ (12.19 m) base section, 40′ (12.19 m) top section, 1¾″ (44 mm) diameter boom pendants, with boom tip extension.

Boom tip extension — tubular; 14,800# (6 713 kg) rating; 10′ (3.05 m) long.

Counterweights — Total 94,400# (42 820 kg). Includes one fixed counterweight — 23,600# (10 705 kg) plus one moving counterweight — 70,800# (32 115 kg) consisting of three sections weighing 23,600# (10 705 kg) each.

Boom①						Capacities	
		Boom point height②		Load radius③		1-part hoist line	
Length	Angle Degree	Feet	meters	Feet	meters	Pounds	kilograms
80′ (24.38 m)	75.5	95′ 8″	29.17	30	9.14	14,800	6 713
	72.2	94′ 0″	28.65	35	10.67	↕	↕
	68.7	92′ 0″	28.04	40	12.19		
	61.6	87′ 0″	26.52	50	15.24		
	53.8	80′ 2″	24.44	60	18.29		
	45.1	71′ 0″	21.64	70	21.34		
	34.7	58′ 2″	17.74	80	24.38	14,800	6 713
90′ (27.43 m)	77.0	106′ 0″	32.31	30	9.14	14,800	6 713
	74.0	104′ 7″	31.88	35	10.67	↕	↕
	71.0	102′ 10″	31.33	40	12.19		
	64.7	98′ 5″	29.99	50	15.24		
	58.0	92′ 6″	28.19	60	18.29		
	50.8	84′ 11″	25.88	70	21.34		
	42.6	74′ 10″	22.80	80	24.38		
	32.8	61′ 0″	18.59	90	27.43	14,800	6 713
100′ (30.48 m)	75.5	115′ 0″	35.05	35	10.67	14,800	6 713
	72.8	113′ 5″	34.56	40	12.19	↕	↕
	67.2	109′ 6″	33.38	50	15.24		
	61.3	104′ 4″	31.79	60	18.29		
	55.0	97′ 8″	29.78	70	21.34		
	48.2	89′ 4″	27.22	80	24.38		
	40.5	78′ 6″	23.93	90	27.43		
	31.1	63′ 8″	19.42	100	30.48	14,800	6 713
110′ (33.53 m)	76.8	125′ 5″	38.22	35	10.67	14,800	6 713
	74.3	124′ 0″	37.80	40	12.19	↕	↕
	69.2	120′ 5″	36.70	50	15.24		
	63.9	115′ 8″	35.27	60	18.29		
	58.4	111′ 11″	34.11	70	21.34		
	52.4	102′ 7″	31.27	80	24.38		
	45.9	93′ 6″	28.50	90	27.43		
	38.6	81′ 11″	24.96	100	30.48		
	29.7	66′ 2″	20.18	110	33.53	14,800	6 713

①Load handled off peak sheave of 10′ (3.05 m) boom tip extension mounted on boom.
②Measured vertically from center of boom tip extension peak sheave to base of turntable bearing mounting.
③Measured from centerline of rotation to center of gravity of freely suspended load.

Boom①						Capacities	
		Boom point height②		Load radius③		1-part hoist line	
Length	Angle Degree	Feet	meters	Feet	meters	Pounds	kilograms
120′ (36.58 m)	77.8	135′ 8″	41.36	35	10.67	14,800	6 713
	75.5	134′ 5″	40.97	40	12.19	↕	↕
	70.9	131′ 1″	39.96	50	15.24		
	66.1	126′ 11″	38.68	60	18.29		
	61.1	121′ 7″	37.06	70	21.34		
	55.8	115′ 1″	35.08	80	24.38		
	50.2	107′ 2″	32.67	90	27.43		
	44.0	97′ 6″	29.72	100	30.48		
	37.0	85′ 2″	25.97	110	33.53		
	28.5	68′ 8″	20.94	120	36.58	14,800	6 713
130′ (39.62 m)	76.6	144′ 8″	44.10	40	12.19	14,800	6 713
	72.3	141′ 8″	43.19	50	15.24	↕	↕
	67.9	137′ 11″	42.03	60	18.29		
	63.4	133′ 1″	40.57	70	21.34		
	58.6	127′ 2″	38.77	80	24.38		
	53.6	120′ 2″	36.64	90	27.43		
	48.2	117′ 8″	34.05	100	30.48		
	42.3	101′ 4″	30.88	110	33.53		
	35.5	88′ 4″	26.91	120	36.58		
	27.4	71′ 1″	21.67	130	39.62	14,800	6 713
140′ (42.67 m)	77.5	155′ 1″	47.27	40	12.19	14,700	6 668
	73.5	152′ 4″	46.42	50	15.24	↕	↕
	69.5	148′ 8″	45.32	60	18.29		
	65.3	144′ 4″	43.98	70	21.34		
	60.9	138′ 11″	42.34	80	24.38		
	56.4	132′ 7″	40.42	90	27.43		
	51.6	125′ 0″	38.10	100	30.48		
	46.4	115′ 11″	35.33	110	33.53		
	40.7	104′ 11″	31.97	120	36.58		
	34.2	91′ 4″	27.83	130	39.62		
	26.4	73′ 5″	22.37	140	42.67	14,700	6 668

(continued)

Refer to Notes page 15.

TG-1900 lifting crane capacities — off boom tip extension① only

Refer to Notes page 15.

Boom① Length	Boom① Angle Degree	Boom point height② Feet	Boom point height② meters	Load radius③ Feet	Load radius③ meters	Capacities 1-part hoist line Pounds	Capacities 1-part hoist line kilograms
150' (45.72 m)	78.3	165' 4"	50.38	40	12.19	14,700	6 668
	74.6	162' 8"	49.59	50	15.24		
	70.8	159' 5"	48.59	60	18.29		
	66.9	155' 4"	47.34	70	21.34		
	62.9	150' 5"	45.84	80	24.38		
	58.8	144' 6"	44.04	90	27.43		
	54.4	137' 8"	41.97	100	30.48		
	49.8	129' 7"	39.50	110	33.53		
	44.8	120' 0"	36.58	120	36.58		
	39.3	108' 6"	33.07	130	39.62		
	33.1	94' 2"	28.71	140	42.67		
	25.5	75' 7"	23.04	150	45.72	14,700	6 668
160' (48.77 m)	75.5	173' 1"	52.76	50	15.24	14,700	6 668
	72.0	170' 0"	51.82	60	18.29		
	68.4	166' 2"	50.66	70	21.34		
	64.7	161' 7"	49.26	80	24.38		
	60.8	156' 2"	47.61	90	27.43		
	56.8	149' 11"	45.69	100	30.48		
	52.6	142' 7"	43.46	110	33.53		
	48.2	134' 0"	40.84	120	36.58		
	43.4	123' 11"	37.76	130	39.62		
	38.1	111' 11"	34.11	140	42.67		
	32.0	97' 1"	29.60	150	45.72		
	24.7	77' 8"	23.68	160	48.77	14,700	6 668
170' (51.82 m)	76.4	183' 6"	55.93	50	15.24	14,700	6 668
	73.0	180' 6"	55.02	60	18.29		
	69.6	177' 0"	53.95	70	21.34		
	66.2	172' 8"	52.64	80	24.38		
	62.6	167' 8"	51.11	90	27.43		
	58.9	161' 11"	49.35	100	30.48		
	55.1	155' 1"	47.27	110	33.53		
	51.0	147' 4"	44.90	120	36.58		
	46.7	138' 4"	42.15	130	39.62		
	42.1	127' 8"	38.92	140	42.67		
	36.9	115' 2"	35.11	150	45.72		
	31.1	99' 10"	30.42	160	48.77		
	23.9	79' 8"	24.29	170	51.82	14,700	6 668
180' (54.86 m)	77.1	193' 10"	59.07	50	15.24	14,700	6 668
	74.0	191' 0"	58.22	60	18.29		
	70.8	187' 8"	57.21	70	21.34		
	67.5	183' 8"	55.99	80	24.38		
	64.2	179' 0"	54.56	90	27.43		
	60.7	173' 7"	52.91	100	30.48		
	57.2	167' 4"	50.99	110	33.53		
	53.5	160' 2"	48.83	120	36.58		
	49.5	151' 11"	46.30	130	39.62		
	45.4	142' 5"	43.40	140	42.67		
	40.9	131' 5"	40.05	150	45.72		
	35.9	118' 5"	36.09	160	48.77		
	30.2	102' 5"	31.21	170	51.82		
	23.3	81' 8"	24.90	180	54.86	14,700	6 668

Boom① Length	Boom① Angle Degree	Boom point height② Feet	Boom point height② meters	Load radius③ Feet	Load radius③ meters	Capacities 1-part hoist line Pounds	Capacities 1-part hoist line kilograms
190' (57.91 m)	77.8	204' 1"	62.21	50	15.24	14,700	6 668
	74.8	201' 6"	61.42	60	18.29		
	71.8	198' 4"	60.44	70	21.34		
	68.7	194' 6"	59.28	80	24.38		
	65.6	190' 1"	57.94	90	27.43		
	62.3	185' 0"	56.39	100	30.48		
	59.0	179' 2"	54.62	110	33.53		
	55.6	172' 7"	52.61	120	36.58		
	52.0	165' 0"	50.29	130	39.62		
	48.2	156' 4"	47.67	140	42.67		
	44.1	146' 5"	44.65	150	45.72		
	39.8	135' 0"	41.15	160	48.77		
	34.9	121' 6"	37.03	170	51.82		
	29.4	105' 0"	32.00	180	54.86	14,700	6 668
	22.6	83' 8"	25.51	190	57.91	12,600	5 715
200' (60.96 m)	78.4	214' 4"	65.32	50	15.24	14,700	6 668
	75.5	211' 10"	64.56	60	18.29		
	72.7	208' 10"	63.64	70	21.34		
	69.8	205' 4"	62.58	80	24.38		
	66.8	201' 1"	61.30	90	27.43		
	63.8	196' 4"	59.83	100	30.48		
	60.7	190' 11"	58.19	110	33.53		
	57.4	184' 8"	56.30	120	36.58		
	54.1	177' 8"	54.16	130	39.62		
	50.6	169' 8"	51.72	140	42.67		
	46.9	160' 8"	48.98	150	45.72		
	43.0	150' 5"	45.84	160	48.77		
	38.7	138' 6"	42.21	170	51.82	14,700	6 668
	34.0	124' 6"	37.95	180	54.86	13,900	6 305
	28.7	107' 6"	32.77	190	57.91	11,800	5 352
	22.1	85' 7"	26.09	200	60.96	9,900	4 491

①Load handled off peak sheave of 10' (3.05 m) boom tip extension mounted on boom.
②Measured vertically from center of boom tip extension peak sheave to base of turntable bearing mounting.
③Measured from centerline of rotation to center of gravity of freely suspended load.

TG-1900 lifting crane notes for crane mounted on a 9′ 9″ x 9′ 9″ (2.97 x 2.97 m) tower with or without climbing frame, pedestal, or on a bogie or gantry.

General notes:

1. Loads shown are in pounds and in all cases are limited by strength capabilities of the machine. Proper design of the substructure to withstand the loadings imposed by the machine shall be the responsibility of the purchaser. A deduction must be made from these capacities for weight of load handling equipment such as hook block, hook, *sling, grapple, load weighing devices,* etc.

2. The operator must make the following considerations when operating the crane:
   a. Make certain the actual load operating radius is the same as the radius specified on the capacity chart. The load radius is measured from the center of the tower base section to the center of gravity of the freely *suspended load. The user must make* allowances for increases in the load radius caused by stretching of the boom suspension and deflection of the boom and tower.
   b. Prevent shock or impact loading of the crane's structure especially when operating during low temperatures.
   c. Effect of wind on loads with large surface areas.

3. Do not lift a load with a single part of *main hoist line at boom angles greater* than 84.0°.

4. Do not lift a load on the 10′ (3.05 m) boom tip extension when the main hook is in use.

5. For each 10 feet (3.05 m) of boom foot height above the lowest hook position, the following deductions must be made from these lifting capacities:
   192# (87 kg) when using 4 parts of main hoist line
   144# (65 kg) when using 3 parts of main hoist line
   96# (44 kg) when using 2 parts of main hoist line
   48# (22 kg) when using 1 part of main hoist line

6. If the 10′ (3.05 m) boom tip extension is not attached to the boom, 2,400 pounds (1 089 kg) may be added to the main hoist lifting capacities but must not exceed the maximum rated capacity for the number of parts of line being used.

7. The boom hanger block is not required when using one part or two parts of main hoist line. If the hanger block is removed when using one part or two parts of main hoist line, 1,800 pounds (816 kg) may be added to these main hoist capacities but must not exceed the maximum rated capacity for the number of parts of line being used.

8. These capacities are based on a 30 m.p.h. (48.27 km/h) wind in the operating condition, and a hook load reduction must be made when winds exceed 30 m.p.h. (48.27 km/h).

9. If the machine is swung 360° in the nonoperating condition, the machine, reeving, and hook blocks must clear any *obstacles with the boom stowed at its* specified position. This precaution is necessary due to the weathervane rotation of the crane by the wind.

10. These capacities apply only to the machine as originally manufactured and normally equipped by FMC Corporation, Cable Crane and Excavator Division.

Tower mounted with climbing frame

Notes:

1. The maximum free standing tower height with a climbing frame is 162′ 7½″ (49.57 m) for boom lengths 80′ (24.38 m) through 170′ (51.82 m). For boom lengths greater than 170′ (51.82 m) and for tower heights greater than 162′ 7½″ (49.57 m), consult manufacturer for additional requirements for the crane.

2. When the crane is in the non-operating condition, the boom must be stowed to conform to one of the following conditions:

Boom length	Condition
80′ - 160′ (24.38 - 48.77 m)	Stow boom at maximum rated radius
170′ (51.82 m)	Stow boom at horizontal position

Tower mounted without climbing frame

Notes:

1. The maximum free standing tower height without a climbing frame is 162′ 7½″ (49.57 m) for boom lengths 80′ (24.38 m) through 200′ (60.96 m). For tower heights greater than 162′ 7½″ (49.57 m), consult manufacturer for additional requirements for the crane.

2. When the crane is in the non-operating condition, the boom must be stowed to conform to one of the following *conditions:*

Boom length	Condition
80′ - 160′ (24.38 - 48.77 m)	Stow boom between a 60° boom angle and maximum rated radius
170′ - 190′ (51.82 - 57.91 m)	Stow boom at maximum rated radius
200′ (60.96 m)	Stow boom at horizontal position

Pedestal, bogie or gantry mounted

Notes:

1. Lifting capacities shown are not more than 66% of the tipping loads calculated under static conditions with the boom in the least stable direction. The user must take into account the dynamic effects of hoisting, lowering, booming, swinging, and traveling. Additional factors to be considered are freely suspended loads, track, wind or ground conditions, boom length and proper operating speeds for the existing conditions.

2. The operator must make certain the actual load operating radius is the same as the radius specified on the capacity chart. The load radius is measured from the center of the traveling base to the center of gravity of the freely suspended load. The user must make allowances for increases in the load radius caused by stretching of boom suspension and deflection of the boom and traveling base.

3. For these lifting capacities, the user must make certain that all specified ballast is properly assembled to the traveling base. Ballast may be necessary to meet stability requirement as specified on working areas and ballast requirement plate.

4. Use caution when approaching rail stops with crane bumpers. Excessive rate of contact can result in crane's instability and/or failure of rail stops.

5. When the crane is in the non-operating condition, the rail mounted traveling base must be secured with rail clamps or tie downs to prevent drifting.

We are constantly improving our products and therefore reserve the right to change designs and specifications.

DCL International Inc.

Mailing address: P.O. Box 90, Concord, Ontario, Canada, L4K 1B2
Toll free: 1-800-872-1968 *Phone:* 905-660-6450 *Fax:* 905-660-7566 *E-mail:* sales@dcl-inc.com

DCL MINE-X® ULTRA

SF	**A non-blocking diesel particulate filter for most above ground diesel applications. Available in standard design or as a muffler replacement.**	

The following document certifies that the DCL product in question has been administered according to DCL specifications pertaining to the given application. MINE-X® products are sized according to application specifications obtained through DCL's clients and DCL is not responsible for incorrect information supplied by clients leading to wrongful sizing assessments.

Working Principles

The oxidation catalyst converts carbon monoxide (CO) and hydrocarbons (HC) into carbon dioxide (CO_2) and water (H_2O). In diesel engine applications the catalyst additionally converts the volatile organic fraction of particulate matter of exhaust into CO_2 and H_2O.

$CO + O_2 \rightarrow CO_2$
$HC + O_2 \rightarrow CO_2 + H_2O$
$C + O_2 \rightarrow CO_2$

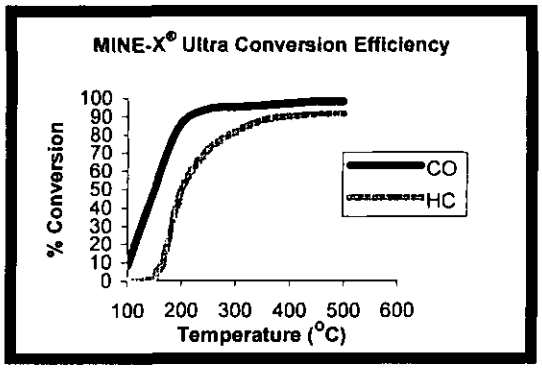

Typical Conversion Efficiencies for MINE-X® Ultra for Diesel Engines

EMISSION	UNTREATED DIESEL FUEL	CATALYST PERFORMANCE
Carbon Monoxide (CO)	500-1000 ppm	Typically exceeds 50% removal at 160 °C (320 °F). Typically exceeds 90% removal at above 260 °C (500 °F).
Hydrocarbons (HC)	300-500 ppm C_1	Typically exceeds 50% removal at 250 °C (482 °F). Typically exceeds 70% removal at above 300 °C (572 °F).
Diesel Particulate Matter (DPM)	25-150 mg/m³	Typically exceeds 50% removal when used with diesel fuel with a sulfur content less than 15 ppm (ULSD fuel).