THE PORT AUTHORITY OF NY & NJ
PROCUREMENT DEPARTMENT
2 MONTGOMERY STREET, 3RD FL.
JERSEY CITY, NJ 07302

3-11-2015

ADDENDUM # 1

To prospective Bidder for Bid # 41672 entitled, "Construct and Deliver Two (2) Barge-Type Rail Car Floats for the Transport of Rail Cars":

Due back on 4/7/2015, no later than 11:00 AM

I. CHANGES/MODIFICATIONS:

A. See attached Part V, Specifications:

- Exhibit B – Sustainability Documents
- Exhibit C – Coating Reference Documents
- Exhibit D – Cathodic Protection Reference Documents

which were inadvertently not included.

II. BIDDER'S QUESTIONS AND ANSWERS

The following information is available in response to questions submitted by prospective Bidders. The responses should not be deemed to answer all questions, which have been submitted by Bidders to the Port Authority. It addresses only those questions, which the Port Authority has deemed to require additional information and/or clarification. The fact that information has not been supplied with respect to any questions asked by a Bidders does not mean or imply, nor should it be deemed to mean or imply, any meaning, construction, or implication with respect to the terms.

The Port Authority makes no representations, warranties or guarantees that the information contained herein is accurate, complete or timely or that such information accurately represents the conditions that would be encountered during the performance of the Contract. The furnishing of such information by the Port Authority shall not create or be deemed to create any obligation or liability upon it for any reason whatsoever and each Bidder, by submitting its Bid, expressly agrees that it has not relied upon the foregoing information, and that it shall not hold the Port Authority liable or responsible therefore in any manner whatsoever. Accordingly, nothing contained herein and no representation, statement or promise, of the Port Authority, its Commissioners, officers, agents, representatives, or employees, oral or in writing, shall impair or limit the effect of

the warranties of the Bidder required by this Bid or Contract and the Bidder agrees that it shall not hold the Port Authority liable or responsible therefore in any manner whatsoever.

Q1. Is the Bid Opening the same date as Bid Due Date, April 7th at 11AM?
A1. Yes. Please see front cover of the "Invitation for Bid/Public bid Opening" where it states, "SUBMIT SEALED BIDS BEFORE THE DUE DATE AND TIME TO THE ABOVE ADDRESS WHERE THEY WILL BE PUBLICLY OPENED AND READ".

Q2. Is there a weight estimate for the Car Float?
A2. No. Please refer to the Invitation for Bid. Based on the material specified in the design, the Bidder can determine the weight estimate for the Car Float.

Q3. When is Contract award?
A3. Please see Part II, Contract Specific Information for Bidders, Section 3, "Expected Date of Commencement of Contract", "On or about June 11, 2015."

Q4. Could you please offer guidance on the likelihood of the Port Authority requiring a Performance Bond?
A4. It cannot be determined at this time if a Performance Bond will be required. However, please see Part III, "Contract Specific Terms and Conditions, Section 10, penultimate paragraph, first sentence, "If the Contractor furnishes a bond in accordance with the requirements of the Port Authority under this numbered clause, the Port Authority shall reimburse the Contractor for the net amount actually paid by it to the surety or sureties as the premium on such bond."

THE PORT AUTHORITY OF NY & NJ
Kathy Leslie Whelan, Asst. Director
Commodities & Services Division

QUESTIONS CONCERNING THIS ADDENDUM MAY BE ADDRESSED TO Mr. Richard A. Grehl, WHO CAN BE REACHED AT (201) 395-3441 or at rgrehl@panynj.gov.

PS11All

EXHIBIT B. SUSTAINABILITY DOCUMENTS

Document Title
Sustainable Infrastructure Guidelines - Project Credit Checklist Form
Sustainable Infrastructure Guidelines - Project Credit Documentation Form

SUSTAINABLE INFRASTRUCTURE GUIDELINES
PROJECT CREDIT CHECKLIST FORM - Version 1.0

PORT AUTHORITY OF NY & NJ

GENERAL PROJECT INFORMATION

PROJECT NAME:	*Cross Harbor Freight Program - Contract No. #2&7*
FACILITY:	*Port Jersey - Greenville Yard*
LE/A or RE:	*Yu S. Wong*
PHONE NUMBER:	*973-792-4541*
EMAIL ADDRESS:	*ywong@panynj.gov*
PID #	*10195000/10199000*
CONTRACT #	*NYNJRR-644.516*
DATE:	*8/2/2012*
PROJECT ACHIEVEMENT:	Gold

PROJECT CERTIFICATION SIGNATURES

By entering the names below as a digital signature, the LEA and Principal Engineer certify that all information in this document is correct and accurate.

LEA (stage 3) or RE (stage 4) digital signature:

Type digital signature here

I certify that the information contained in this document is correct and accurate.

Principal digital signature (Stage 3):

Type digital signature here

I certify that the information contained in this document is correct and accurate.

PROJECT TYPE

Choose a Project Type or Types

- ☐ Airfield New Construction / Reconstruction
- ☐ Airfield Pavement Rehabilitation
- ☐ Bridge New Construction / Reconstruction
- ☐ Bridge and Tunnel Rehabilitation
- ☐ Civil - Work Orders
- ☐ Intelligent Transportation System
- ☑ **Marine Structures - Docks, Wharves, Bulkheads, etc.**
- ☐ Parking Lot New Construction / Reconstruction
- ☐ Parking Lot Rehabilitation
- ☐ Port Site Work
- ☐ Roadway New Construction / Reconstruction
- ☐ Roadway Pavement Rehabilitation
- ☐ Trackwork
- ☐ Utility New Construction
- ☐ Utility Rehabilitation

Associated Scopes of Work

- ☐ Landscaping
- ☐ Exterior Lighting
- ☐ MECH / EL / Fire Suppression System Installation
- ☐ Traffic Safety and Public Environment

	CREDIT NUMBER	POINTS ACHIEVABLE	CREDIT NAME	PURSUING CREDIT?	POINTS ACHIEVED	INCLUDE CREDIT
SITE	IS-1		Utilize Integrated Team Approach	☐		☐
	IS-2		Prepare a Site Assessment	☐		☐
	IS-3		Maximize Use of Previously Developed Land	☐		☐
	IS-4		Maximize Use of Known Contaminated Sites	☐		☐
	IS-5		Protect the Ecological Health of Wetlands and Floodplains	☐		☐
	IS-6		Protect and Maintain Absorbent Landscapes			☐
			15% of absorbant landscape protected and maintained (1 point)	☐		
			30% of absorbant landscape protected and maintained (2 points)	☐		
	IS-7		Utilize Pervious Pavements			☐
			25% of total pavement area utilizes pervious pavement (1 point)	☐		
			50% of total pavement area utilizes pervious pavement (2 points)	☐		
			75% of total pavement area utilizes pervious pavement (3 points)	☐		
	IS-8		Utilize Appropriate Vegetation	☐		☐
	IS-9		Use Turfgrass Appropriately	☐		☐
	IS-10		Amend and Reuse Existing Soils	☐		☐
	IS-11		Balance Earthwork			☐
			25% less removal of material or less new material required (1 point)	☐		
			50% less removal of material or less new material required (2 points)	☐		
	IS-12		Coordinate Utility Work			☐
			Coodrinate Utility Work (1 point)	☐		
			Install Leak Detection System (1 point)	☐		
	IS-13		Utilize Trenchless Technology			☐
			Rehabilitation of existing pipe (2 points), or:	☐		
			Replacement of pipe (1 point)	☐		
	IS-14		Mitigate Heat Island Effect			☐
			50% of site area utilizes heat island effect mitigation strategies (1 point)	☐		
			75% of site area utilizes heat island effect mitigation strategies (2 points)	☐		
			95% of site area utilizes heat island effect mitigation strategies (3 points)	☐		
	IS-15		Minimize Light Pollution	☐		☐
	IS-16		Optimize Public Environments - Bicycles and Pedestrians			☐
			Pedestrian amenities (1 point)	☐		
			Bicycle amenities (2 points)	☐		
	IS-17		Optimize Traffic Safety	☐		☐
	IS-18		Optimize Roadway Alignment Selection	☐		☐
	IS-19		Expand or Enhance Intermodal Connection	☐		☐
	IS-20		Use Transportation System Management	☐		☐
	IS-21		Use Transportation Technologies	☐		☐
WATER	IW-1		Implement Stormwater Best Management Practices			☐
			> 1/4 NJ (new imperv surface) ***or*** >1 arce NY (soil erosion) (1 point)	☐		
			< 1/4 NJ (new imperv. surface) ***or*** <1 arce NY (soil erosion) (3 points)	☐		
	IW-2		Implement Rainwater Neutrality	☐		☐
	IW-3		Reduce Use of Potable Water for Irrigation			☐
			Use harvested storm water for 50% of irrigation requirments (1 point)	☐		
			Use harvested storm water for 75% of irrigation requirments (2 points)	☐		
	IW-4		Utilize End Use Metering - Water	☐		☐
ERGY	IE-1		Optimize Energy Performance			☐
			10% reduction (2 point)	☐		
			20% reduction (4 points)	☐		
			30% reduction (6 points)	☐		
	IE-2		Commissioning Electrical and Mechanical Systems	☐		☐

EN	IE-3		Utilize End Use Metering - Energy	☐		☐
	IE-4		Use On-Site Renewable Energy	☐		☐
	IE-5		Protect Ozone Layer	☐		☐
	IE-6		Provide Alternative Fueling Stations	☐		☐
MATERIAL	IM-1	1 to 3	Use Recycled Materials			☐
			Specify one (1) type of material (1 point)	☑	1	
			Specify three (3) types of materials (2 points)	☐		
			Specify five (5) types of materials (3 points)	☐		
	IM-2	1	Use Local / Regional Materials	☐		☐
	IM-3		Reuse Materials	☐		☐
	IM-4	1	Use Durable Materials	☐		☐
	IM-5	1	Use Sustainably Harvested Wood	☐		☐
	IM-6		Minimize Use of Toxic and / or Hazardous Materials	☐		☐
	IM-7		Enhance Pavement Lifecycle	☐		☐
	IM-8		Utilize Thin Surface Paving	☐		☐
	IM-9		Utilize Warm Mix Asphalt Technology	☐		☐
CONSTRUCTION	IC-1	2	Minimize Pollution from Construction Activity	☑	2	☐
	IC-2	2	Protect Existing Natural Systems	☑	2	☐
	IC-3		Utilize Transportation Management During Construction	☐		☐
	IC-4	1	Utilize Green Construction Equipment	☑	1	☐
	IC-5	1	Reduce Noise and Vibration During Construction	☑	1	☐
	IC-6	1 to 2	Implement Construction Waste Management			☐
			75% diversion - all required materials (1 point)	☑	1	
			75% diversion - all recommended materials (1 point)	☑	1	
	IC-7		Implement Integrated Pest Management During Construction	☐		☐
O + M	IO-1		Implement Sustainable Landscape Maintenance	☐		☐
	IO-2		Maintain Soil Quality	☐		☐

TOTAL POINTS

TOTAL POINTS ACHIEVABLE: **14**

RATING	POINTS		
CERTIFIED	6	to	8
GOLD	9	to	10
PLATINUM	11	to	14

POINTS ACHIEVED: **9**

RATING ACHIEVED: **GOLD**

SUSTAINABLE INFRASTRUCTURE GUIDELINES
PROJECT CREDIT DOCUMENTATION FORM

PORT AUTHORITY OF NY & NJ

INSTRUCTIONS	GENERAL PROJECT INFORMATION	
For each credit, provide applicable documentation type (drawing #, specification # or narrative) as indicated in project manual. All documentation is required at the end of Stage 3 and/or 4 as indicated below.	PROJECT NAME:	*Enter project name here*
	FACILITY:	*Enter facility here*
	LE/A or RE:	*Enter LEA or RE name here*
	PHONE:	*Enter phone number here*
	EMAIL:	*Enter email address here*
	PID #	*Enter PID number here*
	CONTRACT #	*Enter contract number here*
	DATE:	

Credit Number	Credit Title	Document-ation Stage	Contract Drawing Number	Reference Specification Number	Narrative Description
SITE SECTION					
IS-1	UTILIZE AN INTEGRATED TEAM APPROACH	1, 2, & 3			
IS-2	PREPARE A SITE ASSESSMENT	1, 2, & 3			
IS-3	MAXIMIZE USE OF PREVIOUSLY DEVELOPED SITES	3			
IS-4	MAXIMIZE USE OF KNOWN CONTAMINATED SITES	3, 4			
IS-5	PROTECT ECOLOGICAL HEALTH OF WETLAND, FLOODPLAINS & RIPARIAN BUFFERS	3			
IS-6	PROTECT AND MAINTAIN ABSORBENT LANDSCAPES	3			
IS-7	UTILIZE PERVIOUS PAVEMENT	3			
IS-8	UTILIZE APPROPRIATE VEGETATION	3, 4			

Credit Number	Credit Title	Document-ation Stage	Contract Drawing Number	Reference Specification Number	Narrative Description
IS-9	USE TURFGRASS APPROPRIATELY	3, 4			
IS-10	AMEND AND REUSE EXISTING SOILS	3, 4			
IS-11	BALANCE EARTHWORK	3			
IS-12	COORDINATE UTILITY WORK	3			
IS-13	UTILIZE TRENCHLESS TECHNOLOGY	3			
IS-14	MITIGATE HEAT ISLAND EFFECT	3			
IS-15	MINIMIZE LIGHT POLLUTION	3			
IS-16	OPTIMIZE PUBLIC ENVIRONMENTS - BICYCLES AND PEDESTRIANS	3			
IS-17	OPTIMIZE TRAFFIC SAFETY	3			
IS-18	OPTIMIZE ROADWAY ALIGNMENT SECTION	3			
IS-19	EXPAND OR ENHANCE INTERMODAL CONNECTIVITY	3			
IS-20	USE TRANSPORTATION SYSTEM MANAGEMENT	3			
IS-21	USE TRANSPORTATION TECHNOLOGIES	3			
WATER SECTION					
IW-1	IMPLEMENT STORMWATER BEST MANAGEMENT PRACTICES STRATEGIES	3			

Credit Number	Credit Title	Document-ation Stage	Contract Drawing Number	Reference Specification Number	Narrative Description
IW-2	IMPLEMENT RAINWATER NEUTRALITY	3			
IW-3	REDUCE USE OF POTABLE WATER FOR IRRIGATION	3			
IW-4	UTILIZE END USE METERING - WATER	3			
ENERGY SECTION					
IE-1	OPTIMIZE ENERGY PERFORMANCE	3			
IE-2	COMMISSION ELECTRICAL AND MECHANICAL SYSTEMS	3, 4			
IE-3	UTILIZE END USE METERING - ENERGY	3			
IE-4	USE ON-SITE RENEWABLE ENERGY	3			
IE-5	PROTECT OZONE LAYER	3			
IE-6	PROVIDE ALTERNATIVE FUELING STATIONS	3			
MATERIAL SECTION					
IM-1	USE RECYCLED MATERIALS	3, 4			
IM-2	USE LOCAL / REGIONAL MATERIALS	3, 4			
IM-3	REUSE MATERIALS	3			
IM-4	USE DURABLE MATERIALS	3			

Credit Number	Credit Title	Document-ation Stage	Contract Drawing Number	Reference Specification Number	Narrative Description
IM-5	USE SUSTAINABLY HARVESTED WOOD	3, 4			
IM-6	MINIMIZE USE OF TOXIC AND/OR HAZARDOUS MATERIALS	3			
IM-7	ENHANCE PAVEMENT LIFECYCLE	3			
IM-8	UTILIZE THIN SURFACE PAVING	3			
IM-9	UTILIZE WARM-MIX ASPHALT TECHNOLOGY	3			
CONSTRUCTION SECTION					
IC-1	MINIMIZE POLLUTION FROM CONSTRUCTION ACTIVITY	3, 4			
IC-2	PROTECT EXISTING NATURAL SYSTEMS	3, 4			
IC-3	UTILIZE TRANSPORTATION MANAGEMENT DURING CONSTRUCTION	3, 4			
IC-4	UTILIZE GREEN CONSTRUCTION EQUIPMENT	3, 4			
IC-5	REDUCE NOISE AND VIBRATION ABATEMENT DURING CONSTRUCTION	3, 4			
IC-6	IMPLEMENT CONSTRUCTION WASTE MANAGEMENT	3, 4			
IC-7	IMPLEMENT INTEGRATED PEST MANAGEMENT DURING CONSTRUCTION	3, 4			
OPERATIONS & MAINTENANCE SECTION					
IO-1	IMPLEMENT SUSTAINABLE LANDSCAPE MAINTENANCE	3			

Credit Number	Credit Title	Document-ation Stage	Contract Drawing Number	Reference Specification Number	Narrative Description
IO-2	MAINTAIN SOIL QUALITY	3			

EXHIBIT C. COATING REFERENCE DOCUMENTS

Document Title
Hempel Specification Sheets
Product Data - Hempadur Multi-Strength 45751/ 45753
Product Data - Hempasil Nexus 27302
Product Data - Hempasil X3 87500
Product Data - Hempathane HS 55610

Other Acceptable Coating Manufacturers:

Document Title
Sherwin – Williams Specification Sheets
Product Data – Sherwin – Williams SEAGUARD 5000 HS Black & Red
Product Data - Sherwin – Williams SEAGUARD ABLATIVE Antifouling Coating Red
Product Data - Sherwin – Williams SEAGUARD Void Coat LT
Product Data - Sherwin – Williams ACROLON 218 HS

Document Title
PPG Protective and Marine Coatings Specification Sheets
Product Data – Amercoat 235
Product Data – Amercoat 214 Antifouling Coating
Product Data – Amercoat 450 H
Product Data – Dimetcote 302 H
Product Data – Amercoat 237 M

Specification sheet

Hempel (USA) Inc.

Project: CAR FLOAT SPECIFICATION Rev1

Area:

Underwater Area

Surface preparation:

Oil and grease etc. to be removed by emulsion cleaning. Salts and other contamination to be removed by high pressure fresh water hosing. When the surface is dry abrasive blasting to minimum SSPC-SP 10 with a surface profile corresponding to Rugotest No. 3 BN 10, Keane-Tator Comparator, min. 3.0 G/S or ISO Comparator Rough Medium (G). Dust off residues.

Product name (including quality number)	Treated area %		Colour	Shade no.	Film thickness (mil) Wet	Film thickness (mil) Dry	Theoretical spreading rate (sq.ft/US gal)	Application methods Brush	Application methods Roller	Application methods Spray	Recommended Nozzle orifice	Recommended Nozzle pressure
HEMPADUR MULTI-STRENGTH 45751	f/c	100	Red	50630	10	8	160.9	X	(X)	X	.021"-.023"	3625 p.s.i.
HEMPADUR MULTI-STRENGTH 45751	f/c	100	Grey	11480	10	8	160.9	X	(X)	X	.021"-.023"	3625 p.s.i.
HEMPASIL NEXUS 27302	f/c	100	Light red	55001	7	4	237.6	(X)		X	.019"-.021"	2175 p.s.i.
HEMPASIL X3 87500	f/c	100	Red	59151	7	5	228.1	(X)		X	0.019	2175 p.s.i.
t/u: touch up f/c: full coat s/c: stripe coat			Total d.f.t.			25		X: Recommended (X): Possible				

Recoating intervals. Ample ventilation Hrs=Hour(s) Mth=Month(s) N/R=Not Recommended

Quality no	D.F.T. (mil)	Recoated with quality no	104°F Min.	104°F Max.	86°F Min.	86°F Max.	68°F Min.	68°F Max.	50°F Min.	50°F Max.	32°F Min.	32°F Max.	14°F Min.	14°F Max.
45751	8	45751	110 Min	9 Day	3 Hrs	15 Day	6 Hrs	30 Day	15 Hrs	75 Day	N/R	N/R	N/R	N/R
45751	8	27302	2 Hrs	7 Hrs	4 Hrs	12 Hrs	8 Hrs	24 Hrs	20 Hrs	60 Hrs	N/R	N/R	N/R	N/R
27302	4	87500	1)	1)	1)	1)	1)	1)	1)	1)	N/R	N/R	N/R	N/R

Remarks and Product information see next page.

Specification sheet

Hempel (USA) Inc.

Project: CAR FLOAT SPECIFICATION Rev1

Area:

Underwater Area

Remarks:

Normal good painting practice must be followed throughout the entire painting procedure.
HEMPASIL products contain silicone materials, which may contaminate other paint materials and surfaces. Any equipment used, e.g. brushes, rags or cans should either be disposed of or thoroughly cleaned after use. All efforts (including masking if necessary) should be made to ensure, that silicone contamination in the form of spray dust is kept to a minimum.

It is recommended that all other paint work is completed prior to application of HEMPASIL system and that special care is taken during both application and cleaning.

Note that the minimum application temperature for HEMPASIL is 50°F and if the temperature is below 59°F, then the temperature of the paint must be a minimum of 68°F, when applied.

All hoses used must be extremely clean and, if possible, should be either new or dedicated for silicone use. It is recommended that the same paint hoses are used for both HEMPASIL NEXUS and HEMPASIL X3 87500, with thorough cleaning between the two operations.
All equipment that is not new must be cleaned using HEMPEL'S TOOL CLEANER 99610 by recirculation or immersion (stirrers) for several hours before use to remove all traces of paint and then rinsed with HEMPEL'S THINNER 08080 prior to use.
It is recommended that extra equipment is available and ready in the event of a failure of the equipment in use.

Any masking should be secured carefully; the topsides area and any other area not to be coated with HEMPASIL X3 87500 should be covered with plastic. This plastic should be properly secured using double width tape so that it does not fall or blow into any freshly applied paint. The masking must be checked and if necessary repaired prior to every application to make sure that it is secure.

All sharp edges or areas that are difficult to paint should receive a stripe coat prior to full coat application.

Application of HEMPASIL products are only permitted during daylight hours.

The specified high film thickness for HEMPASIL X3 87500 can best be obtained by airless spray application. If another application method is used more applications are necessary to achieve the specified dry film thickness. Use of an application method other than spray may affect the fouling release performance of the system.

A minimum of 24 hours should be allowed before undocking, irrespective of temperature (above 50°F). If the temperature falls below 50°F then 48 hours must be allowed before undocking.
1) Overcoating intervals between HEMPASIL NEXUS 27302 and HEMPASIL X3 87500
(in hours)

27302 to 87500 at:	104°F Min.	Max.	86°F Min.	Max.	68°F Min.	Max.	50°F Min.	Max.
80-90% RH	3	12	4	18	6	24	18	30
60-80% RH	4	12	5	18	7	24	20	30
40-60% RH	5	12	6	18	9	24	22	30

The data, specifications, directions and recommendations (hereinafter "information") given in this painting specification are based upon test results obtained under controlled or specifically defined conditions and said information is correct to the best of our knowledge. The User must satisfy itself that it is appropriate to use the Product in accordance with the information in the actual conditions under which the Product is intended to be used, and the Manufacturer and Seller do not guarantee the accuracy, completeness or appropriateness of the Information when the Product is used in those conditions. The provisions regarding Hempel's liability in its applicable conditions for sale, delivery and service shall apply to any and all claims arising out of or in connection with the use of the products recommended above, overleaf or otherwise.

Specification sheet

Hempel (USA) Inc.

Project: CAR FLOAT SPECIFICATION Rev1

Area:

Underwater Area

Product information:	Shade no.	Volume solids %	Curing agent	Mixing ratio volume	Pot life 68°F	Dry to touch 68°F	Flash point °F	Thinner	Application restrictions Min. Temp. °F	Max. RH%
HEMPADUR MULTI-STRENGTH 45751	50630	79	97652	3 : 1	1 h	7 h	81	08450	50	90
HEMPADUR MULTI-STRENGTH 45751	11480	79	97652	3 : 1	1 h	7 h	81	08450	50	90
HEMPASIL NEXUS 27302	55001	70	98100	14.8 : 4.2 : 1	1 h	2 h	86	08080	50	
HEMPASIL X3 87500	59151	70	98950	17.8 : 2.2	2 h	3 h	82	08080	32	85

The data, specifications, directions and recommendations (hereinafter "Information") given in this painting specification are based upon test results obtained under controlled or specifically defined conditions and said Information is correct to the best of our knowledge. The User must satisfy itself that it is appropriate to use the Product in accordance with the Information in the actual conditions under which the Product is intended to be used, and the Manufacturer and Seller do not guarantee the accuracy, completeness or appropriateness of the Information when the Product is used in those conditions. The provisions regarding Hempel's liability in its applicable conditions for sale, delivery and service shall apply to any and all claims arising out of or in connection with the use of the products recommended above, overleaf or otherwise.

Specification sheet

Hempel (USA) Inc.

Project: CAR FLOAT SPECIFICATION Rev1

Area:

Above Water Area

Surface preparation:

Oil and grease etc. to be removed by emulsion cleaning. Salts and other contamination to be removed by high pressure fresh water hosing. When the surface is dry abrasive blasting to minimum SSPC-SP 10 with a surface profile corresponding to Rugotest No. 3 BN 10, Keane-Tator Comparator, min. 3.0 G/S or ISO Comparator Rough Medium (G). Dust off residues.

Product name (including quality number)	Treated area %	Colour	Shade no.	Film thickness (mil) Wet	Film thickness (mil) Dry	Theoretical spreading rate (sq.ft/US gal)	Application methods Brush	Application methods Roller	Application methods Spray	Recommended Nozzle orifice	Recommended Nozzle pressure
HEMPADUR MULTI-STRENGTH 45751	f/c 100	Red	50630	10	8	160.9	X	(X)	X	.021"-.023"	3625 p.s.i.
HEMPADUR MULTI-STRENGTH 45751	f/c 100	Grey	11480	10	8	160.9	X	(X)	X	.021"-.023"	3625 p.s.i.
HEMPATHANE HS 55610	f/c 100	To Be Advised	T.B.A	5	3	353.0	X	(X)	X	.017"-.021"	2538 p.s.i.
t/u: touch up f/c: full coat s/c: stripe coat		Total d.f.t.			19		X: Recommended		(X): Possible		

Recoating intervals. Ample ventilation Hrs=Hour(s) Mth=Month(s) N/R=Not Recommended

Quality no	D.F.T. (mil)	Recoated with quality no	104°F Min.	104°F Max.	86°F Min.	86°F Max.	68°F Min.	68°F Max.	50°F Min.	50°F Max.	32°F Min.	32°F Max.	14°F Min.	14°F Max.
45751	8	45751	110 Min	9 Day	3 Hrs	15 Day	6 Hrs	30 Day	15 Hrs	75 Day	N/R	N/R	N/R	N/R
45751	8	55610	95 Min	22 Hrs	3 Hrs	36 Hrs	5 Hrs	72 Hrs	13 Hrs	7½ Day	N/R	N/R	N/R	N/R

Remarks and Product information see next page.

Specification sheet

Hempel (USA) Inc.

Project: CAR FLOAT SPECIFICATION Rev1

Area:

Above Water Area

Remarks:

Normal good painting practice must be followed throughout the entire painting procedure.

Consult the separate APPLICATION INSTRUCTIONS for HEMPADUR MULTI-STRENGTH 45751.

The surface must be completely clean and dry with a temperature 5°F above the dew point to avoid condensation.

The specified high film thickness can best be obtained by airless spray application. If another application method is used more applications are necessary to achieve the specified dry film thickness.

Stripe coating with brush before or after spray application of each coat is to be carried out on areas difficult to cover properly by spray as eg edges, corners, flanges, cutouts, handwelds and other rough surfaces.

Before recoating after exposure in contaminated environments, clean the surface thoroughly by (high pressure) fresh water hosing and allow to dry.

If the maximum recoating interval is exceeded, roughening of the surface is necessary to ensure intercoat adhesion.

Product information:	Shade no.	Volume solids %	Curing agent	Mixing ratio volume	Pot life 68°F	Dry to touch 68°F	Flash point °F	Thinner	Application restrictions Min. Temp. °F	Max. RH%
HEMPADUR MULTI-STRENGTH 45751	50630	79	97652	3 : 1	1 h	7 h	81	08450	50	90
HEMPADUR MULTI-STRENGTH 45751	11480	79	97652	3 : 1	1 h	7 h	81	08450	50	90
HEMPATHANE HS 55610	T.B.A	65	97050	7 : 1	2 h	5 h	88	08080	14	85

The data, specifications, directions and recommendations (hereinafter "information") given in this painting specification are based upon test results obtained under controlled or specifically defined conditions and said information is correct to the best of our knowledge. The User must satisfy itself that it is appropriate to use the Product in accordance with the information in the actual conditions under which the Product is intended to be used, and the Manufacturer and Seller do not guarantee the accuracy, completeness or appropriateness of the information when the Product is used in those conditions. The provisions regarding Hempel's liability in its applicable conditions for sale, delivery and service shall apply to any and all claims arising out of or in connection with the use of the products recommended above, overleaf or otherwise.

Specification sheet

Hempel (USA) Inc.

Project: CAR FLOAT SPECIFICATION Rev1

Area:

Main Deck

Surface preparation:

Oil and grease etc. to be removed by emulsion cleaning. Salts and other contamination to be removed by high pressure fresh water hosing. When the surface is dry abrasive blasting to minimum SSPC-SP 10 with a surface profile corresponding to Rugotest No. 3 BN 10, Keane-Tator Comparator, min. 3.0 G/S or ISO Comparator Rough Medium (G). Dust off residues.

Product name (including quality number)		Treated area %	Colour	Shade no.	Film thickness (mil) Wet	Film thickness (mil) Dry	Theoretical spreading rate (sq.ft/US gal)	Application methods Brush	Application methods Roller	Application methods Spray	Recommended Nozzle orifice	Recommended Nozzle pressure
HEMPADUR MULTI-STRENGTH 45751	f/c	100	Red	50630	10	8	160.9	X	(X)	X	.021"-.023"	3625 p.s.i.
HEMPADUR MULTI-STRENGTH 45751	f/c	100	Grey	11480	10	8	160.9	X	(X)	X	.021"-.023"	3625 p.s.i.
HEMPATHANE HS 55610	f/c	100	To Be Advised	T.B.A	5	3	353.0	X	(X)	X	.017"-.021"	2538 p.s.i.
t/u: touch up f/c: full coat s/c: stripe coat			Total d.f.t.			19		X: Recommended (X): Possible				

Recoating intervals. Ample ventilation Hrs=Hour(s) Mth=Month(s) N/R=Not Recommended

Quality no	D.F.T. (mil)	Recoated with quality no	104°F Min.	104°F Max.	86°F Min.	86°F Max.	68°F Min.	68°F Max.	50°F Min.	50°F Max.	32°F Min.	32°F Max.	14°F Min.	14°F Max.
45751	8	45751	110 Min	9 Day	3 Hrs	15 Day	6 Hrs	30 Day	15 Hrs	75 Day	N/R	N/R	N/R	N/R
45751	8	55610	95 Min	22 Hrs	3 Hrs	36 Hrs	5 Hrs	72 Hrs	13 Hrs	7½ Day	N/R	N/R	N/R	N/R

Remarks and Product information see next page.

Specification sheet

Hempel (USA) Inc.

Project: CAR FLOAT SPECIFICATION Rev1

Area:
Main Deck

Remarks:

Normal good painting practice must be followed throughout the entire painting procedure.

Consult the separate APPLICATION INSTRUCTIONS for HEMPADUR MULTI-STRENGTH 45751.

The surface must be completely clean and dry with a temperature 5°F above the dew point to avoid condensation.

The specified high film thickness can best be obtained by airless spray application. If another application method is used more applications are necessary to achieve the specified dry film thickness.

Stripe coating with brush before or after spray application of each coat is to be carried out on areas difficult to cover properly by spray as eg edges, corners, flanges, cutouts, handwelds and other rough surfaces.

HEMPEL'S ANTI-SLINT 67500 should be sprinkled evenly on the surface immediately upon application of the penultimate coat of HEMPADUR MULTI-STRENGTH 45751 while the paint is still wet. Consumption approximately 5.5 lbs per 270 sq-ft. When the paint is dry, sweep up surplus grit and apply the final coat of HEMPATHANE HS 55610.

Before recoating after exposure in contaminated environments, clean the surface thoroughly by (high pressure) fresh water hosing and allow to dry.

If the maximum recoating interval is exceeded, roughening of the surface is necessary to ensure intercoat adhesion.

Product information:	Shade no.	Volume solids %	Curing agent	Mixing ratio volume	Pot life 68°F	Dry to touch 68°F	Flash point °F	Thinner	Application restrictions Min. Temp. °F	Max. RH%
HEMPADUR MULTI-STRENGTH 45751	50630	79	97652	3 : 1	1 h	7 h	81	08450	50	90
HEMPADUR MULTI-STRENGTH 45751	11480	79	97652	3 : 1	1 h	7 h	81	08450	50	90
HEMPATHANE HS 55610	T.B.A	65	97050	7 : 1	2 h	5 h	88	08080	14	85

The data, specifications, directions and recommendations (hereinafter "Information") given in this painting specification are based upon test results obtained under controlled or specifically defined conditions and said Information is correct to the best of our knowledge. The User must satisfy itself that it is appropriate to use the Product in accordance with the Information in the actual conditions under which the Product is intended to be used, and the Manufacturer and Seller do not guarantee the accuracy, completeness or appropriateness of the Information when the Product is used in those conditions. The provisions regarding Hempel's liability in its applicable conditions for sale, delivery and service shall apply to any and all claims arising out of or in connection with the use of the products recommended above, overleaf or otherwise.

Product Data

HEMPADUR MULTI-STRENGTH 45751/ HEMPADUR MULTI-STRENGTH 45753

Medium to high temperatures: 45751: BASE 45755 with CURING AGENT 97652
Low to medium temperatures: 45753: BASE 45755 with CURING AGENT 98750

Description:
HEMPADUR MULTI-STRENGTH 45751/45753 is a self-priming, two-component, high-build, epoxy-polyamide/amine paint which cures to an abrasion and corrosion resistant coating. Applicable by standard heavy duty airless spray equipment.

Recommended use:
As a heavy duty coating for areas exposed to abrasion and aggressive corrosive climate such as ramps, ship hulls and holds of bulk carriers.
As a ballast tank coating for special purposes such as chemical carriers carrying hot cargoes and other purposes where "pure epoxy coating" is requested.
As a finishing coat where a cosmetic appearance is of less importance.
HEMPADUR MULTI-STRENGTH 45751 is intended for use in warm climates.
HEMPADUR MULTI-STRENGTH 45753 is intended for use in cold climates - see APPLICATION CONDITIONS overleaf.

Service temperatures:

Dry exposure only:	Maximum 140°C/284°F *(See REMARKS overleaf)*
Ballast water service:	Resists normal ambient temperatures at sea*
Other water service:	50°C/122°F (no temperature gradient)
Other liquids:	Contact HEMPEL

**Avoid long-term exposure to negative temperature gradients.*

Certificates/Approvals:
Tested for non-contamination of grain cargo at the Newcastle Occupational Health, Great Britain. Approved by Lloyd's Register of Shipping as a recognized corrosion control coating. Approved as a ballast tank coating by Germanischer Lloyd, Germany.
HEMPADUR MULTI-STRENGTH 45753 has been classified B1 by DNV, Norway.
Recognized by Lloyd's Register of Shipping as a low friction surface coating for ships navigating in first year ice conditions. Conforms with Norsok M-501, system no. 7.
HEMPADUR MULTI-STRENGTH 45753 has been tested by Teknologisk Institutt AS, Norway, and approved for internal use in pipe lines for water power generation according to NS 5417.
Complies with EU Directive 2004/42/EC, subcategory j (see REMARKS overleaf).

Availability:
Part of Group Assortment. Local availability subject to confirmation.

PHYSICAL CONSTANTS:

	45751	45753
Version; mixed product:		
Colours/Shade nos:	Grey/12340 - Red/50630	Grey/12340 - Red/50630
Finish:	Semi-gloss	Semi-gloss
Volume solids, %:	79 ± 1	79 ± 1
Theoretical spreading rate:	4.0 m²/litre - 200 micron 158 sq.ft./US gallon - 8 mils	4.0 m²/litre - 200 micron 158 sq.ft./US gallon - 8 mils
Flash point:	27°C/81°F	27°C/81°F
Specific gravity:	1.6 kg/litre - 13.4 lbs/US gallon	1.6 kg/litre - 13.4 lbs/US gallon
Dry to touch:	7-8 hours at 20°C/68°F	8-10 hours at 10°C/50°F
Fully cured:	7 days at 20°C/68°F	14 days at 10°C/50°F
V.O.C.:	260 g/litre - 2.2 lbs/US gallon	245 g/litre - 2.0 lbs/US gallon

The physical constants stated are nominal data according to the HEMPEL Group's approved formulas. They are subject to normal manufacturing tolerances and where stated, being standard deviation according to ISO 3534-1.

APPLICATION DETAILS:

	45751	45753
Mixing ratio:	Base 45755 : Curing agent 97652 3 : 1 by volume	Base 45755 : Curing agent 98750 3 : 1 by volume
Application method:	Airless spray	
Thinner (max.vol.):	08450 (5%)(See PRECEDING COAT overleaf and separate APPLICATION INSTRUCTIONS)	
Pot life:	1 hour (20°C/68°F)	1 hour (20°C/68°F)
Nozzle orifice:	.021"-.023"	.021"-.023"
Nozzle pressure:	250 bar/3600 psi *(Airless spray data are indicative and subject to adjustment)*	250 bar/3600 psi
Cleaning of tools:	HEMPEL'S TOOL CLEANER 99610	
Indicated film thickness, dry:	200 micron/8 mils	200 micron/8 mils
Indicated film thickness, wet:	250 micron/10 mils	250 micron/10 mils
Recoat interval, min:	6 hours (20°C/68°F)	12 hours (10°C/50°F)
Recoat interval, max:	See REMARKS overleaf	See REMARKS overleaf

Safety:
Handle with care. Before and during use, observe all safety labels on packaging and paint containers, consult HEMPEL Material Safety Data Sheets and follow all local or national safety regulations. Avoid inhalation, avoid contact with skin and eyes, and do not swallow. Take precautions against possible risks of fire or explosions as well as protection of the environment. Apply only in well ventilated areas.

SURFACE PREPARATION:

New steel:
"Heavy duty use": Abrasive blasting to min. Sa 2½ with a surface profile corresponding to Rugotest No. 3, min. BN10, Keane-Tator Comparator 3.0 G/S, or ISO Comparator Rough Medium (G). Oil and grease must be removed with suitable detergent, salts and other contaminants by (high pressure) fresh water hosing prior to blasting. After blasting, clean the surface carefully from abrasive and dust.
Ballast tanks: For PSPC type approved coating, consult separate APPLICATION INSTRUCTIONS - BALLAST TANKS for HEMPADUR MULTI-STRENGTH 45753.
Stainless steel: (Ballast tanks in chemical carriers) to be abrasive blasted to a uniform, sharp, dense profile, ISO Comparator Medium (G), corresponding to Rz minimum 50 micron. Any salts, grease, oil, etc. to be removed before abrasive blasting is commenced.
Repair and maintenance: The actual purpose and conditions may make other types and degrees of surface preparation than the above described relevant. Reference is made to separate application instructions.

APPLICATION CONDITIONS:

Use only where application and curing can proceed at temperatures above -10°C/14°F for HEMPADUR MULTI-STRENGTH 45753 and above 10°C/50°F for HEMPADUR MULTI-STRENGTH 45751. The temperature of the paint itself should be above 15°C/59°F, preferably above 20°C/68°F for HEMPADUR MULTI-STRENGTH 45751, for proper application. Apply only on a dry and clean surface with a temperature above the dew point to avoid condensation. Relative humidity max. 90%. In confined spaces provide adequate ventilation during application and drying.

PRECEDING COAT:

None, but HEMPADUR 15590 can be used as a "blast primer" for HEMPADUR MULTI-STRENGTH 45751. HEMPADUR MULTI-STRENGTH 45753 can be used as a "blast primer" for HEMPADUR MULTI-STRENGTH 45753 when diluted 25-30% with HEMPEL'S THINNER 08450.

SUBSEQUENT COAT: None, HEMPADUR or HEMPATHANE-paint as per specification, depending on area of use.

REMARKS:

VOC - EU directive 2004/42/EC:

45751				
	As supplied	5 vol. % thinning	Limit phase i, 2007	Limit phase ii, 2010
VOC in g/l	260	290	550	500
45753				
	As supplied	5 vol. % thinning	Limit phase i, 2007	Limit phase ii, 2010
VOC in g/l	245	275	550	500

VOC: For VOC of other shades, please refer to Safety Data Sheet.

Colour of curing agent: The curing agent 98750 has a tendency to become darker at storage. This has no influence on performance, but may influence the shade of the mixed product.

Some **certificates** have been issued under the former quality numbers 45750 or 4575.
HEMPADUR MULTI-STRENGTH 45751 is identical with the former 45750 except that mixing ratio and thixotropy properties have been adjusted to specific demands of application, for instance dual feed two component spray equipment and supply in 1000 litres paint containers.

Weathering/ service temperatures: The natural tendency of epoxy coatings to chalk in outdoor exposure and to become more sensitive to mechanical damage and chemical exposure at elevated temperatures is also reflected in this product.

Film thicknesses: May be specified in another film thickness than indicated depending on purpose and area of use. This will alter spreading rate and may influence drying time and recoating interval. Normal range dry is 150-250 micron/6-10 mils. It is recommended to use heavy airless spray equipment with a pump transmission rate of 60:1 (approximately), and a theoretical output of min. 12 litres per minute.

Curing agent: Curing agents 97652 and 98750 are hazy. This is intended and has no negative influence on the performance.

Recoating: Recoating intervals related to later conditions of exposure:
(200 micron/8 mils dry film thickness of HEMPADUR MULTI-STRENGTH 45751/45753)

	Curing agent 97652						Curing agent 98750					
	Minimum			Maximum			Minimum			Maximum		
Surface temp.	20°C/68°F						10°C/50°F					
Recoated with	Atmospheric			Atmospheric			Atmospheric			Atmospheric		
	Medium	Severe	Immer-sion *	Medium	Severe	Immer-sion *	Medium	Severe	Immer-sion *	Medium	Severe	Immer-sion *
HEMPADUR	4 hours	5 hours	6 hours	None	None	30 days	8 hours	10 hours	12 hours	None	None	60 days
HEMPATHANE Topcoat	4 hours	5 hours	N/R	10 days	3 days	N/R	8 hours	10 hours	N/R	20 days	5 days	N/R

* and heavy wear - eg bulk cargo holds and fender areas. If such areas are to be topcoated with HEMPATHANE, same max as for atmospheric/severe apply. The long maximum recoating interval for HEMPADUR will be reduced if the coating is more than just scarcely exposed to direct sunshine before recoating. If the interval is exceeded, roughening of surface is necessary to ensure intercoat adhesion.

Thinning: Normally not to be diluted.

Note: **HEMPADUR MULTI-STRENGTH 45751/45753 is for professional use only.**

ISSUED BY: HEMPEL A/S - 4575112340C0007/4575312340C0005

This Product Data Sheet supersedes those previously issued. For explanations, definitions and scope, see "Explanatory Notes" in the HEMPEL Book.
Data, specifications, directions and recommendations given in this data sheet represent only test results or experience obtained under controlled or specially defined circumstances. Their accuracy, completeness or appropriateness under the actual conditions of any intended use of the Products herein must be determined exclusively by the Buyer and/or User. The Products are supplied and all technical assistance is given subject to HEMPEL's GENERAL CONDITIONS OF SALES, DELIVERY AND SERVICE, unless otherwise expressly agreed in writing. The Manufacturer and Seller disclaim, and Buyer and/or User waive all claims involving, any liability, including but not limited to negligence, except as expressed in said GENERAL CONDITIONS for all results, injury or direct or consequential losses or damages arising from the use of the Products as recommended above, on the overleaf or otherwise.
Product data are subject to change without notice and become void five years from the date of issue.

Product Data

HEMPASIL NEXUS 27302

FOULING RELEASE TIECOAT
BASE 27309 with CURING AGENT 98100 and ADDITIVE 99701

Description: HEMPASIL NEXUS 27302 is a high solid three component silicone based product.

Recommended use: As a tiecoat for the HEMPASIL FOULING RELEASE System, securing adhesion between the anticorrosive system and the Hempasil Fouling Release topcoat.

Availability: Part of Group Assortment. Local availability subject to confirmation.

PHYSICAL CONSTANTS:

Colour/Shade nos:	Light red 55001
Finish:	Semi-gloss
Volume solids, %:	70 (see REMARKS overleaf)
Theoretical spreading rate:	5.8 m²/litre - 120 micron 234 sq.ft./US gallon - 4.8 mils
Flash point:	30°C/86°F
Specific gravity:	1.3 kg/litre - 10.8 lbs/US gallon
Dry to touch:	2 hours at 20°C/68°F
Fully cured:	7 days at 20°C/68°F
V.O.C.:	265 g/litre - 2.3 lbs/US gallon
Shelf life:	1 year (25°C/77°F) from time of production. Depending on storage conditions, mechanical stirring may be necessary before usage. If the shelf life is exceeded please contact HEMPEL for further advice.

The physical constants stated are nominal data according to the HEMPEL Group's approved formulas. They are subject to normal manufacturing tolerances and where stated, being standard deviation according to ISO 3534-1.

APPLICATION DETAILS:

Mixing ratio:	Shade 55001: Base 27309: Curing Agent 98100: Additive 99701 14,8 : 4,2 : 1 by volume *(See REMARKS overleaf)*
Application method:	Airless spray Brush/roller *(touch-up) (see REMARKS overleaf)*
Thinner:	No thinning *(see REMARKS overleaf)*
Nozzle orifice:	.019"-.021"
Nozzle pressure:	150 bar/2200 psi *(Airless spray data are indicative and subject to adjustment)*
Cleaning of tools:	THINNER 08080 *(see REMARKS overleaf)*
"Pot life":	1 hour (20°C/68°F) *(see REMARKS overleaf)*
Indicated film thickness, dry:	120 micron/4.8 mils
Indicated film thickness, wet:	175 micron/7 mils
Recoat interval, min:	6 hours (20°C/68°F) (see REMARKS overleaf)
Recoat interval, max:	24 hours (20°C/68°F)

Safety: Handle with care. Before and during use, observe all safety labels on packaging and paint containers, consult HEMPEL Material Safety Data Sheets and follow all local or national safety regulations. Avoid inhalation, avoid contact with skin and eyes, and do not swallow. Take precautions against possible risks of fire or explosions as well as protection of the environment. Apply only in well ventilated areas.

HEMPASIL NEXUS 27302

SURFACE PREPARATION:	**New construction:** According to painting specification/product data sheet for the specified HEMPADUR system. **Maintenance, old F/R systems:** Possible spot repair with specified HEMPADUR system followed by spot application of HEMPASIL NEXUS 27302. In any of the above-mentioned cases, a detailed working specification is available upon request.
APPLICATION CONDITIONS:	Use only where application can proceed at temperatures above 10°C/50°F. The temperature of the surface and that of the paint itself must also be above this limit. Apply only on a surface with a temperature above the dew point to avoid condensation. The surface should be clean and dry. In confined spaces provide adequate ventilation during application and drying.
PRECEDING COAT:	HEMPADUR according to specification.
SUBSEQUENT COAT:	HEMPASIL FOULING RELEASE COATING according to specification.
REMARKS:	It is of the utmost importance that thorough protection and cleaning procedures are followed before and after application respectively. It is advisable to apply HEMPASIL system after all other exterior painting is complete. This is to avoid silicone contamination of other painted surfaces. **Before** application cover all surfaces surrounding the areas to be applied with plastic sheeting to avoid overspray. **After** application clean all equipment thoroughly, before re-using equipment. See below.
Volume solids:	The stated value is the theoretical volume solids: solid content of the mixed product. Due to the chemical reaction in the mixture the practical volume solid will be approx. 5% lower than indicated.
Mixing:	Add ADDITIVE 99701 to BASE 27309 while stirring. Immediately after add CURING AGENT 98100 and mix.
"Pot life":	The pot life is 1 hour at 20°C/68°F. No change in the paints physical properties (e.g. viscosity increase) is apparent when this time is exceeded. It is important that the paint is no longer used as its adhesion properties to the preceding coat are dramatically reduced after that time.
Application method:	A well executed spray application is necessary. This paint material has special application properties and it is recommended first to make a small-scale application to get familiar with the properties.
Thinning:	Not recommended. In exceptional cases use THINNER 08080 (max 5 vol.%).
Recoating by itself:	HEMPASIL NEXUS 27302 must be applied in one coat. In case HEMPASIL NEXUS 27302 has to be recoated by itself, application must be wet in wet.
Weather conditions:	Please refer to application manual.
Cleaning of tools:	Very thorough cleaning with THINNER 08080 is necessary. DISPOSE OF CLEANING SOLVENTS AFTER USE. DO NOT RE-USE SOLVENTS AFTER CLEANING.
Storage of cans:	Must be stored under absolutely dry conditions, protect against seeping humidity.
Note:	**HEMPASIL NEXUS 27302 is for professional use only.**
ISSUED BY:	HEMPEL A/S - 2730255001CR001

This Product Data Sheet supersedes those previously issued.
For explanations, definitions and scope, see "Explanatory Notes" in the HEMPEL Book.
Data, specifications, directions and recommendations given in this data sheet represent only test results or experience obtained under controlled or specially defined circumstances. Their accuracy, completeness or appropriateness under the actual conditions of any intended use of the Products herein must be determined exclusively by the Buyer and/or User.
The Products are supplied and all technical assistance is given subject to HEMPEL's GENERAL CONDITIONS OF SALES, DELIVERY AND SERVICE, unless otherwise expressly agreed in writing. The Manufacturer and Seller disclaim, and Buyer and/or User waive all claims involving, any liability, including but not limited to negligence, except as expressed in said GENERAL CONDITIONS for all results, injury or direct or consequential losses or damages arising from the use of the Products as recommended above, on the overleaf or otherwise.
Product data are subject to change without notice and become void five years from the date of issue.

Product Data

HEMPASIL X3 87500

BASE 87509 - HEMPASIL CROSSLINKER 98950
FOULING RELEASE COATING

Description:
HEMPASIL X3 is a third generation fouling release coating with high solids content. The product is based on silicone, is biocide free and cures after addition of HEMPASIL CROSSLINKER 98950.
It provides a smooth, low surface energy repellent surface with unique fouling release properties. A hydro gel micro layer prevents fouling organisms firmly adhering while the silicone polymers facilitate self-cleaning. HEMPASIL X3 therefore possess a high fuel saving potential. Under extended static conditions (idle periods) the coating may accumulate some fouling.

Recommended use:
For vessels with service speeds above 8 knots.

Availability:
Part of Group Assortment. Local availability subject to confirmation.

PHYSICAL CONSTANTS:

Colour/Shade nos.:	Red/59151 , Blue/30170, Black/19990
Finish:	Glossy
Volume solids, %:	71±1
Theoretical spreading rate:	4.7 m^2/litre - 150 micron 192 sq.ft./US gallon - 6 mils
Flash point:	28°C/82°F
Specific gravity:	1.0 kg/litre - 8.3 lbs/US gallon
Dry to touch:	3 hours at 20°C/68°F
Fully cured:	7 days at 20°C/68°F
V.O.C.:	265 g/litre - 2.2 lbs/US gallon
Shelf life:	1½ years (25°C/77°F) from time of production. Depending on storage conditions, mechanical stirring may be necessary before usage. If the shelf life is exceeded please contact HEMPEL for further advice.

The physical constants stated are nominal data according to the HEMPEL Group's approved formulas. They are subject to normal manufacturing tolerances and where stated, being standard deviation according to ISO 3534-1.

APPLICATION DETAILS:

Mixing ratio for 87500:	Base 87509 : CROSSLINKER 98950 17.8:2.2 by volume
Application method:	Airless spray Brush *(touch-up) (see REMARKS overleaf)*
Thinner (max. vol.):	No thinning *(see REMARKS overleaf)*
Nozzle orifice:	.019"-.021"
Nozzle pressure:	150 bar/2200 psi *(Airless spray data are indicative and subject to adjustment)*
Cleaning of tools:	THINNER 08080
Pot life:	2 hours (20°C/68°F) after addition of HEMPASIL CROSSLINKER 98950, clear 00000
Indicated film thickness, dry:	150 micron/ 6 mils
Indicated film thickness, wet:	225 micron/ 9 mils
Recoat interval, min:	6 hours (20°C/68°F)
Recoat interval, max:	None

Safety:
Handle with care. Before and during use, observe all safety labels on packaging and paint containers, consult HEMPEL Material Safety Data Sheets and follow all local or national safety regulations. Avoid inhalation, avoid contact with skin and eyes, and do not swallow. Take precautions against possible risks of fire or explosions as well as protection of the environment. Apply only in well ventilated areas.

HEMPASIL 87500

APPLICATION CONDITIONS:	Use only where application can proceed at temperatures above 10°C/50°F. The temperature of the surface and that of the paint itself must also be above this limit. Apply only on a surface with a temperature above the dew point to avoid condensation. Relative humidity of the air between min. 30% and max. 85%. The surface should be clean and dry. The special application properties do furthermore necessitate extra consideration as to possible windy weather. The on-site representative from Hempel is to be consulted. In confined spaces provide adequate ventilation during application and drying.
PRECEDING COAT:	HEMPASIL NEXUS 27302 in light red 55001 or according to specification.
SUBSEQUENT COAT:	None.
REMARKS:	It is of the utmost importance that thorough protection and cleaning procedures are followed before and after application respectively. It is advisable to apply HEMPASIL SYSTEM after all other exterior painting is complete. This is to avoid silicone contamination of other painted surfaces. **Before** application cover all surfaces surrounding the areas to be applied with plastic sheeting to avoid overspray. **After** application clean all equipment very thoroughly. See below.
Application method:	A well executed spray application is necessary. This paint material has special application properties and it is recommended first to make a small-scale application to get familiar with the properties.
Thinning:	Not recommended. In exceptional cases use THINNER 08080 (max. 5 vol%).
Recommended number of coats:	One coat normally recommended.
Cleaning of tools:	Very thorough cleaning with THINNER 08080 is necessary. DISPOSE OF CLEANING SOLVENTS AFTER USE. DO NOT RE-USE SOLVENTS AFTER CLEANING.
Detailed instructions:	Will be available in connection with separate painting specifications.
Undocking:	Minimum 24 hours (20°C/68°F). At temperatures below 15°C/59°F minimum 48 hours.
Storage of cans:	Must be stored under absolutely dry conditions, protect against seeping humidity.
Note:	**HEMPASIL X3 87500 is for professional use only.**
ISSUED BY:	HEMPEL A/S - 8750059151CR001

This Product Data Sheet supersedes those previously issued.
For explanations, definitions and scope, see "Explanatory Notes" in the HEMPEL Book.
Data, specifications, directions and recommendations given in this data sheet represent only test results or experience obtained under controlled or specially defined circumstances. Their accuracy, completeness or appropriateness under the actual conditions of any intended use of the Products herein must be determined exclusively by the Buyer and/or User.
The Products are supplied and all technical assistance is given subject to HEMPEL's GENERAL CONDITIONS OF SALES, DELIVERY AND SERVICE, unless otherwise expressly agreed in writing. The Manufacturer and Seller disclaim, and Buyer and/or User waive all claims involving, any liability, including but not limited to negligence, except as expressed in said GENERAL CONDITIONS for all results, injury or direct or consequential losses or damages arising from the use of the Products as recommended above, on the overleaf or otherwise.
Product data are subject to change without notice and become void five years from the date of issue.

Product Data

HEMPATHANE HS 55610

BASE 55619 with CURING AGENT 97050

Description:	HEMPATHANE HS 55610 is a two-component polyurethane topcoat, cured with aliphatic isocyanate, with good gloss and colour retention. Contains zinc phosphate.
Recommended use:	As a VOC-compliant, high-build finishing coat for protection of structural steel in corrosive environment. May be specified as a one coat "Direct To Metal" system in environments classified as C2 and C3.
Service temperatures:	Maximum, dry exposure only: 120°C/248°F *(see REMARKS overleaf)*
Availability:	Part of Group Assortment. Local availability subject to confirmation.

PHYSICAL CONSTANTS:

Colours/Shade nos:	White/10000*
Finish:	Glossy
Volume solids, %:	65 ± 1
Theoretical spreading rate:	6.5 m²/litre - 100 micron 261 sq.ft./US gallon - 4 mils
Flash point:	31°C/88°F
Specific gravity:	1.4 kg/litre - 11.7 lbs/US gallon
Surface dry:	3 (approx.) hours at 20°C/68°F *(ISO 1517)*
Dry to touch:	5 (approx.) hours at 20°C/68°F
Fully cured:	7 days at 20°C/68°F
V.O.C.:	330 g/litre - 2.7 lbs/US gallon

**Wide range of colours available via Hempel's MULTI-TINT system.*

The physical constants stated are nominal data according to the HEMPEL Group's approved formulas. They are subject to normal manufacturing tolerances and where stated, being standard deviation according to ISO 3534-1.

APPLICATION DETAILS:

Mixing ratio for 55610:	Base 55619 : Curing agent 97050 7 : 1 by volume	
Application method:	Airless spray *(see REMARKS overleaf)*	Brush *(see REMARKS overleaf)*
Thinner (max.vol.):	08080 (5%)	08080 (5%)
Pot life:	2 hours (20°C/68°F)	
Nozzle orifice:	.017"-.021"	
Nozzle pressure:	175 bar/2540 psi *(Airless spray data are indicative and subject to adjustment)*	
Cleaning of tools:	THINNER 08080/08880	
Indicated film thickness, dry:	100 micron/4 mils *(see REMARKS overleaf)*	
Indicated film thickness, wet:	150 micron/6 mils	
Recoat interval, min:	16 hours (20°C/68°F)	
Recoat interval, max:	None *(see REMARKS overleaf)*	

Safety:	Handle with care. Before and during use, observe all safety labels on packaging and paint containers, consult HEMPEL Material Safety Data Sheets and follow all local or national safety regulations. Avoid inhalation, avoid contact with skin and eyes, and do not swallow. Take precautions against possible risks of fire or explosions as well as protection of the environment. Apply only in well ventilated areas.

HEMPATHANE HS 55610

SURFACE PREPARATION: For one coat, direct to metal: as per relevant painting specification.

APPLICATION CONDITIONS: The surface must be completely clean and dry at the time of application, and its temperature must be above the dew point to avoid condensation. Minimum temperature for curing is -10°C/ 14°F.
At the freezing point and below, be aware of the risk of ice on the surface which will hinder the adhesion. High humidity and/or condensation during application and the following 24 hours (20°C/68°F) may adversely affect the film formation.
In confined spaces provide adequate ventilation during application and drying.

PRECEDING COAT: HEMPADUR FAST DRY 15560, HEMPADUR MASTIC 45880/45881 or according to specification.

SUBSEQUENT COAT: None.

REMARKS:
Service temperatures: At service temperatures above 100°C/212°F HEMPATHANE HS 55610 will become more soft. Furthermore, discolouration may occur.

VOC - EU directive 2004/42/EC:

	As supplied	5 vol. % thinning	Limit phase, 2010
VOC in g/l	330	360	500

VOC: For VOC of other shades, please refer to Safety Data Sheet.

Colours: Certain lead-free red and yellow colours may discolour when exposed to chlorine- containing atmosphere.
To obtain full opacity, an extra coat may be necessary, especially for certain lead-free colours in eg red, orange, yellow and green.

Stripe coating: When specified as a one coat "Direct to Metal"-system 100 micron/4 mils must be applied.
In addition follow "Good Painting Practise" and apply stripe coating before the spray application on areas difficult to cover properly by spray application.

Film thicknesses: May be specified in another film thickness than indicated depending on purpose and area of use. Normal range dry is minimum 50 micron/2 mils (diluted) and minimum 75 micron/3 mils (undiluted), maximum 125 micron/5 mils. This will alter spreading rate and may influence drying time and recoat interval.

Recoat interval: **Maximum recoating interval: A completely clean surface is mandatory to ensure intercoat adhesion, especially at long recoat intervals. Any dirt, oil, and grease have to be removed. e.g. with suitable detergent followed by (high pressure) fresh water cleaning. Salts to be removed by fresh water hosing.**
To check an adequate quality of the surface cleaning a test patch is recommended before actual recoating.

Notes: CURING AGENT 97050 is sensitive to moisture. Store in a dry place and keep the can tightly closed until use. Open curing agent cans with caution as overpressure might exist. Even small traces of water in the mixed paint will reduce the pot life and result in film defects.

HEMPATHANE HS 55610 is for professional use only.

ISSUED BY: HEMPEL A/S - 5561010000CR002

This Product Data Sheet supersedes those previously issued.
For explanations, definitions and scope, see "Explanatory Notes" in the HEMPEL Book.
Data, specifications, directions and recommendations given in this data sheet represent only test results or experience obtained under controlled or specially defined circumstances. Their accuracy, completeness or appropriateness under the actual conditions of any intended use of the Products herein must be determined exclusively by the Buyer and/or User.
The Products are supplied and all technical assistance is given subject to HEMPEL's GENERAL CONDITIONS OF SALES, DELIVERY AND SERVICE, unless otherwise expressly agreed in writing. The Manufacturer and Seller disclaim, and Buyer and/or User waive all claims involving, any liability, including but not limited to negligence, except as expressed in said GENERAL CONDITIONS for all results, injury or direct or consequential losses or damages arising from the use of the Products as recommended above, on the overleaf or otherwise.
Product data are subject to change without notice and become void five years from the date of issue.

Protective & Marine Coatings

SEAGUARD® 5000 HS EPOXY

PART A	N11B350	BLACK	PART A	N11W350	OFF WHITE
PART A	N11R350	RED	PART A	N11G350	GREEN
PART A	N11H350	BUFF	PART A	N11A350	GRAY
			PART B	N11V350	HARDENER

Revised: March 27, 2013

PRODUCT INFORMATION

9.40

PRODUCT DESCRIPTION

SEAGUARD 5000 HS EPOXY is a high performance and high solids, polyamine cured epoxy that is designed to be used as a part of an anticorrosive system for marine applications, or as a lining system for fuel, brine, ballast and non-potable water tanks.

- Complies with IMO Performance Standard for Protective Coatings SOLAS REGULATIONS II-1/3-2 and XII/6.3
- Corrosion resistant
- Outstanding adhesion
- Qualified to MIL-PRF-24647 for underwater hull
- Qualified to MIL-PRF-23236 for ballast tanks and fuel tanks

PRODUCT CHARACTERISTICS

Finish:	Low Sheen
Color:	Black, Off White, Red Deck, Green, Gray, Buff
Volume Solids:	73% ± 2% mixed
Weight Solids:	79% ± 2% mixed
VOC (EPA Method 24):	<250 g/L; 2.08 lb/gal
Mix Ratio:	1:1 by volume (2 components)

Recommended Spreading Rate per coat:

	Minimum	Maximum
Wet mils (microns)	7.0 (175)	10.0 (250)
Dry mils (microns)	5.0 (125)	7.0 (175)
~Coverage sq ft/gal (m^2/L)	167 (4.1)	234 (5.7)
Theoretical coverage sq ft/gal (m^2/L) @ 1 mil / 25 microns dft	1168 (28.6)	

NOTE: Brush or roll application may require multiple coats to achieve maximum film thickness and uniformity of appearance.

Drying Schedule @ 7.0 mils wet (175 microns):

	@ 35°F/1.7°C	@ 50°F/10°C	@ 77°F/25°C 50% RH	@ 110°F/43°C
To touch:	8 hours	5 hours	4 hours	2 hours
To recoat:				
minimum:	24 hours	12 hours	6 hours	3 hours
maximum*:	90 days	90 days	90 days	90 days
To cure:	20 days	14 days	7 days	7 days

*Two weeks maximum for alkyd and urethane topcoats.

If maximum recoat time is exceeded, abrade surface before recoating.

Drying time is temperature, humidity, and film thickness dependent.

Pot Life:	8 hours	6 hours	2 hours	1 hour
Sweat-In-Time:	None	None	None	None

Application of the antifouling coating shall occur while the epoxy coat is still tacky. Refer to the Application Bulletin for the definition of "TACKY".

Shelf Life:	36 months, unopened Store indoors at 40°F (4.5°C) to 100°F (38°C)
Flash Point (ADMIX):	110°F (43°C) PMCC
Reducer/Clean Up:	R7K130 (all temperatures)
Above 80°F (27°C):	R7K100
Below 80°F (27°C):	R2K5

RECOMMENDED USES

For use as a coating for:

- Fuel, brine, ballast and non-potable water tanks
- Underwater hull with appropriate antifouling paint
- Interior or exterior marine applications
- Immersion service
- Acceptable for use with UHP / waterjetted substrates

PERFORMANCE CHARACTERISTICS

Substrate*: Steel

Surface Preparation*: SSPC-SP10/NACE 2

System Tested*:

2 cts. SeaGuard 5000 HS Epoxy @ 5.0 mils (125 microns) dft/ct

*unless otherwise noted below

Test Name	Test Method	Results
Solvent Resistance	ASTM D1308	Passed

Qualified to MIL-PRF-23236, Type VI, Class 5 and 7, Grade C

Qualified to MIL-PRF-24647, Type I, Class 1 and 2, Grade A and B, Application 1 and 4

Qualified to MIL-PRF-24647, Type II, Class 1, Grade B, Application 1, 2, 3 and 4

Tested by Det Norske Veritas (DNV). According to DNV Procedure, testing and classification of ballast tank coatings, REV-02. Tested to the DNV Procedure over a Zinc Shop Primer Steel.

Received Highest Obtainable rating B1

Epoxy coatings may darken or yellow following application and curing.

continued on back

Protective & Marine Coatings

SEAGUARD® 5000 HS EPOXY

PART A	N11B350	BLACK	PART A	N11W350	OFF WHITE
PART A	N11R350	RED	PART A	N11G350	GREEN
PART A	N11H350	BUFF	PART A	N11A350	GRAY
			PART B	N11V350	HARDENER

PRODUCT INFORMATION

9.40

RECOMMENDED SYSTEMS

	Dry Film Thickness / ct. Mils	(Microns)
Steel or Aluminum, immersion:		
2 cts. SeaGuard 5000 HS Epoxy	5.0-7.0	(125-175)
Steel or Aluminum, underwater hull:		
2 cts. SeaGuard 5000 HS Epoxy	5.0-7.0	(125-175)
1-2 cts. SeaGuard antifoulant		
Steel or Aluminum, atmospheric:		
1-2 cts. SeaGuard 5000 HS Epoxy	5.0-7.0	(125-175)
1-2 cts. Sherthane 2K	2.0-4.0	(50-100)
or		
1-2 cts. Polysiloxane XLE-80 HAPS Free	5.0-7.0	(125-175)
or		
1-2 cts. SeaGuard 1000	2.0-3.0	(50-75)
or		
1-2 cts. Hi-Solids Polyurethane	3.0-5.0	(75-125)
Galvanized, atmospheric:		
1 ct. SeaGuard 5000 HS Epoxy	4.0-7.0	(100-175)
1-2 cts. Sherthane 2K	2.0-4.0	(50-100)
or		
1-2 cts. Polysiloxane XLE-80 HAPS Free	5.0-7.0	(125-175)
or		
1-2 cts. SeaGuard 1000	2.0-3.0	(50-75)
or		
1-2 cts. Hi-Solids Polyurethane	3.0-5.0	(75-125)

Seawater Ballast Tank Applications

In accordance with IMO Resolution MSC.215(82) PSPC, all application requirements specified in PSPC Table 1 have to be strictly adhered to.

- **Substrate:** Abrasive blasting to Sa 2.5 (ISO 8501-1), SSPC-SP-10.
- **Surface profile:** 30 - 75 microns as per ISO 8503-1/3.
- **Water soluble contaminants:** ≤ 50mg/m² of sodium chloride. Conductivity measured in accordance with ISO 8502-9.
- **Dry film thickness:** PSPC stipulates a Nominal Dry Film Thickness (NDFT) of 320 microns obtained in 2 coats. The film thickness distribution is measured in accordance with the 90/10 rule.
- Maximum total dry film thickness not to exceed 1000 microns/40 mils.
- **Coating sequence:** Red, followed by light grey.
- **Stripe coats:** 2 strip coats in alternating colors must be applied as part of the system.

The systems listed above are representative of the product's use, other systems may be appropriate.

DISCLAIMER

The information and recommendations set forth in this Product Data Sheet are based upon tests conducted by or on behalf of The Sherwin-Williams Company. Such information and recommendations set forth herein are subject to change and pertain to the product offered at the time of publication. Consult your Sherwin-Williams representative to obtain the most recent Product Data information and Application Bulletin.

SURFACE PREPARATION

Surface must be clean, dry, and in sound condition. Remove all oil, dust, grease, dirt, loose rust, and other foreign material to ensure adequate adhesion.

Refer to product Application Bulletin for detailed surface preparation information.

Minimum recommended surface preparation:

Immersion:
- Iron & Steel / Aluminum: SSPC-SP10/NACE 2, 2.0 mil (50 micron) profile or SSPC-SP12/NACE No.5 - WJ-2M / SC-2 with existing surface profile

Atmospheric:
- Iron & Steel / Aluminum
  - minimum: SSPC-SP2, SSPC-SP3
  - preferred: SSPC-SP6/NACE 3, 2.0 mil (50 micron) profile or SSPC-SP12/NACE No.5 - WJ-3M / SC-2 with existing surface profile
- Galvanizing: SSPC-SP1

Surface Preparation Standards

	Condition of Surface	ISO 8501-1 BS7079:A1	Swedish Std. SIS055900	SSPC	NACE
White Metal		Sa 3	Sa 3	SP 5	1
Near White Metal		Sa 2.5	Sa 2.5	SP 10	2
Commercial Blast		Sa 2	Sa 2	SP 6	3
Brush-Off Blast		Sa 1	Sa 1	SP 7	4
Hand Tool Cleaning	Rusted	C St 2	C St 2	SP 2	-
	Pitted & Rusted	D St 2	D St 2	SP 2	-
Power Tool Cleaning	Rusted	C St 3	C St 3	SP 3	-
	Pitted & Rusted	D St 3	D St 3	SP 3	-

TINTING

Do not tint.

APPLICATION CONDITIONS

Temperature: 35°F (1.7°C) minimum, 110°F (43°C) maximum (air, surface, and material)
At least 5°F (2.8°C) above dew point

Relative humidity: 85% maximum

Refer to product Application Bulletin for detailed application information.

ORDERING INFORMATION

Packaging:
- Part A: 1 gallon (3.78L) and 5 gallon (18.9L) containers
- Part B: 1 gallon (3.78L) and 5 gallon (18.9L) containers

Weight:
- Part A: 12.73 ± 0.2 lb/gal; 1.5 Kg/L
- Part B: 11.43 ± 0.2 lb/gal; 1.4 Kg/L
- Mixed: 12.08 ± 0.2 lb/gal; 1.45 Kg/L

SAFETY PRECAUTIONS

Refer to the MSDS sheet before use.

Published technical data and instructions are subject to change without notice. Contact your Sherwin-Williams representative for additional technical data and instructions.

WARRANTY

The Sherwin-Williams Company warrants our products to be free of manufacturing defects in accord with applicable Sherwin-Williams quality control procedures. Liability for products proven defective, if any, is limited to replacement of the defective product or the refund of the purchase price paid for the defective product as determined by Sherwin-Williams. NO OTHER WARRANTY OR GUARANTEE OF ANY KIND IS MADE BY SHERWIN-WILLIAMS, EXPRESSED OR IMPLIED, STATUTORY, BY OPERATION OF LAW OR OTHERWISE, INCLUDING MERCHANTABILITY AND FITNESS FOR A PARTICULAR PURPOSE.

Protective & Marine Coatings

SEAGUARD® 5000 HS EPOXY

PART A	N11B350	BLACK	PART A	N11W350	OFF WHITE
PART A	N11R350	RED	PART A	N11G350	GREEN
PART A	N11H350	BUFF	PART A	N11A350	GRAY
			PART B	N11V350	HARDENER

Revised: March 27, 2013

APPLICATION BULLETIN

9.40

SURFACE PREPARATIONS

Surface must be clean, dry, and in sound condition. Remove all oil, dust, grease, dirt, loose rust, and other foreign material to ensure adequate adhesion.

Iron & Steel / Aluminum, Immersion Service:
Remove all oil and grease from surface by Solvent Cleaning per SSPC-SP1. Minimum surface preparation is Near White Metal Blast Cleaning per SSPC-SP10/NACE 2 or SSPC-SP12/NACE No. 5. For SSPC-SP10/NACE 2, blast clean all surfaces using a sharp, angular abrasive for optimum surface profile (2.0 mils / 50 microns). For SSPC-SP12/NACE No. 5, all surfaces to be coated shall be cleaned in accordance with WJ-2M/SC-2 standards. Pre-existing profile should be approximately 2.0 mils (50 microns). Remove all weld spatter and round all sharp edges. Prime any bare steel the same day as it is cleaned.

Iron & Steel / Aluminum, Atmospheric Service:
Minimum surface preparation is Hand Tool Clean per SSPC-SP2 or SSPC-SP12/NACE No. 5. For surfaces prepared by SSPC-SP2, first remove all oil and grease from surface by Solvent Cleaning per SSPC-SP1. For better performance, use Commercial Blast Cleaning per SSPC-SP6/NACE 3, blast clean all surfaces using a sharp, angular abrasive for optimum surface profile (2.0 mils / 50 microns). For surfaces prepared by SSPC-SP12/NACE No. 5, all surfaces shall be cleaned in accordance with WJ-3M/SC-2. Pre-existing profile should be approximately 2.0 mils (50 microns). Prime any bare steel the same day as it is cleaned.

Galvanized Steel:
Allow to weather a minimum of six months prior to coating. Solvent Clean per SSPC-SP1 (recommended solvent is VM&P Naphtha). When weathering is not possible, or the surface has been treated with chromates or silicates, first Solvent Clean per SSPC-SP1 and apply a test patch. Allow paint to dry at least one week before testing adhesion. If adhesion is poor, brush blasting per SSPC-SP7 is necessary to remove these treatments. Rusty galvanizing requires a minimum of Hand Tool Cleaning per SSPC-SP2, prime the area the same day as cleaned.

Previously Painted Surfaces
If in sound condition, clean the surface of all foreign material. Smooth, hard or glossy coatings and surfaces should be dulled by abrading the surface. Apply a test area, allowing paint to dry one week before testing adhesion. If adhesion is poor, or if this product attacks the previous finish, removal of the previous coating may be necessary. If paint is peeling or badly weathered, clean surface to sound substrate and treat as a new surface as above.

Surface Preparation Standards

	Condition of Surface	ISO 8501-1 BS7079:A1	Swedish Std. SIS055900	SSPC	NACE
White Metal		Sa 3	Sa 3	SP 5	1
Near White Metal		Sa 2.5	Sa 2.5	SP 10	2
Commercial Blast		Sa 2	Sa 2	SP 6	3
Brush-Off Blast		Sa 1	Sa 1	SP 7	4
Hand Tool Cleaning	Rusted	C St 2	C St 2	SP 2	-
	Pitted & Rusted	D St 2	D St 2	SP 2	-
Power Tool Cleaning	Rusted	C St 3	C St 3	SP 3	-
	Pitted & Rusted	D St 3	D St 3	SP 3	-

APPLICATION CONDITIONS

Temperature:	35°F (1.7°C) minimum, 110°F (43°C) maximum (air, surface, and material) At least 5°F (2.8°C) above dew point
Relative humidity:	85% maximum

APPLICATION EQUIPMENT

The following is a guide. Changes in pressures and tip sizes may be needed for proper spray characteristics. Always purge spray equipment before use with listed reducer. Any reduction must be compliant with existing VOC regulations and compatible with the existing environmental and application conditions.

Reducer/Clean Up .....Reducer #130, R7K130

Airless Spray
Pressure.....2400 psi
Hose.....1/4" ID
Tip.....017" - .031"
Filter.....60 mesh
Reduction.....As needed, up to 5% by volume

Brush
Brush.....Natural Bristle
Reduction.....Not recommended

Roller
Cover .....3/8" - 1/2" woven with solvent resistant core
Reduction.....Not recommended

If specific application equipment is not listed above, equivalent equipment may be substituted.

continued on back

Protective & Marine Coatings

SEAGUARD® 5000 HS EPOXY

PART A	N11B350	BLACK	PART A	N11W350	OFF WHITE
PART A	N11R350	RED	PART A	N11G350	GREEN
PART A	N11H350	BUFF	PART A	N11A350	GRAY
			PART B	N11V350	HARDENER

APPLICATION BULLETIN

9.40

APPLICATION PROCEDURES

Surface preparation must be completed as indicated.

Mix contents of each component thoroughly with low speed power agitation. Make certain no pigment remains on the bottom of the cans. Then combine one part by volume of Part A with one part by volume of Part B. Thoroughly agitate the mixture with power agitation. Allow the material to sweat-in as indicated. Re-stir before using.

If reducer solvent is used, add only after both components have been thoroughly mixed, after sweat-in.

Apply paint at the recommended film thickness and spreading rate as indicated below:

Recommended Spreading Rate per coat:

	Minimum	Maximum
Wet mils (microns)	7.0 (175)	10.0 (250)
Dry mils (microns)	5.0 (125)	7.0 (175)
~Coverage sq ft/gal (m^2/L)	167 (4.1)	234 (5.7)
Theoretical coverage sq ft/gal (m^2/L) @ 1 mil / 25 microns dft	1168 (28.6)	

NOTE: Brush or roll application may require multiple coats to achieve maximum film thickness and uniformity of appearance.

Drying Schedule @ 7.0 mils wet (175 microns):

	@ 35°F/1.7°C	@ 50°F/10°C	@ 77°F/25°C *50% RH*	@ 110°F/43°C
To touch:	8 hours	5 hours	4 hours	2 hours
To recoat:				
minimum:	24 hours	12 hours	6 hours	3 hours
maximum*:	90 days	90 days	90 days	90 days
To cure:	20 days	14 days	7 days	7 days

*Two weeks maximum for alkyd and urethane topcoats.

If maximum recoat time is exceeded, abrade surface before recoating.

Drying time is temperature, humidity, and film thickness dependent.

Pot Life:	8 hours	6 hours	2 hours	1 hour
Sweat-in-Time:	None	None	None	None

Application of the antifouling coating shall occur while the epoxy coat is still tacky. Refer to the Application Bulletin for the definition of "TACKY".

Application of coating above maximum or below minimum recommended spreading rate may adversely affect coating performance.

CLEAN UP INSTRUCTIONS

Clean spills and spatters immediately with Reducer #130, R7K130. Clean tools immediately after use with Reducer #130, R7K130. Follow manufacturer's safety recommendations when using any solvent.

DISCLAIMER

The information and recommendations set forth in this Product Data Sheet are based upon tests conducted by or on behalf of The Sherwin-Williams Company. Such information and recommendations set forth herein are subject to change and pertain to the product offered at the time of publication. Consult your Sherwin-Williams representative to obtain the most recent Product Data information and Application Bulletin.

PERFORMANCE TIPS

Stripe coat all crevices, welds, and sharp angles to prevent early failure in these areas.

When using spray application, use a 50% overlap with each pass of the gun to avoid holidays, bare areas, and pinholes. If necessary, cross spray at a right angle.

Spreading rates are calculated on volume solids and do not include an application loss factor due to surface profile, roughness or porosity of the surface, skill and technique of the applicator, method of application, various surface irregularities, material lost during mixing, spillage, overthinning, climatic conditions, and excessive film build.

Excessive reduction of material can affect film build, appearance, and adhesion.

Excessive film build, poor ventilation, and cool temperatures may cause solvent entrapment and premature coating failure.

For **Immersion Service:** (if required) Holiday test in accordance with ASTM D5162 for steel, or ASTM D4787 for concrete.

Do not apply the material beyond recommended pot life.

Do not mix previously catalyzed material with new.

In order to avoid blockage of spray equipment, clean equipment before use or before periods of extended downtime with Reducer #130, R7K130.

Material must be at least 50°F/10°C prior to catalyzing.

Application of the antifoulant coating shall occur when the last coat of epoxy anticorrosive is still tacky. If the epoxy is hard, apply a tack coat of epoxy anticorrosive at 1-2 mils (25-50 microns) WFT over previously painted surfaces. "Tacky" is defined as that curing (drying) stage when a fingertip pressed lightly against the film leaves only a slight impression and none of the film sticks to the finger.

Application of solvent based alkyd coating, such as MIL-PRF-24635, shall be applied when the epoxy is "dry to the touch, but not fully cured." (For example prior to 7 days @ 77°F/25°C).

Refer to Product Information sheet for additional performance characteristics and properties.

SAFETY PRECAUTIONS

Refer to the MSDS sheet before use.

Published technical data and instructions are subject to change without notice. Contact your Sherwin-Williams representative for additional technical data and instructions.

WARRANTY

The Sherwin-Williams Company warrants our products to be free of manufacturing defects in accord with applicable Sherwin-Williams quality control procedures. Liability for products proven defective, if any, is limited to replacement of the defective product or the refund of the purchase price paid for the defective product as determined by Sherwin-Williams. NO OTHER WARRANTY OR GUARANTEE OF ANY KIND IS MADE BY SHERWIN-WILLIAMS, EXPRESSED OR IMPLIED, STATUTORY, BY OPERATION OF LAW OR OTHERWISE, INCLUDING MERCHANTABILITY AND FITNESS FOR A PARTICULAR PURPOSE.

Protective & Marine Coatings

SEAGUARD® ABLATIVE ANTIFOULING COATING

P30RQ10 ..... RED
P30BQ12 ..... BLACK P30LQ13 ..... BLUE

Revised April 10, 2014

PRODUCT INFORMATION

9.12

PRODUCT DESCRIPTION

SEAGUARD ABLATIVE ANTIFOULING COATING is an advanced antifouling coating based on a polyamide polymer containing cuprous oxide. Recommended for the underwater surfaces of steel vessels operating in all coastal and oceanic waters. This product maintains an effective, bio-active surface during its entire life.

- Long Life
- Brush, roll, or spray application
- A tin-free ablative coating
- Complies with the requirements of MIL-PRF-24647

PRODUCT CHARACTERISTICS

Finish:	Flat
Color:	Red, Black, and Blue
Volume Solids:	65% ± 2%
VOC (EPA Method 24):	<400 g/L; 3.33 lb/gal, maximum

Recommended Spreading Rate per coat:

	Minimum	Maximum
Wet mils (microns)	4.0 (100)	7.0 (175)
Dry mils (microns)	2.5 (63)	4.0 (100)
~Coverage sq ft/gal (m^2/L)	260 (6.4)	430 (10.5)
Theoretical coverage sq ft/gal (m^2/L) @ 1 mil / 25 microns dft	1040 (25.5)	

NOTE: Brush or roll application may require multiple coats to achieve maximum film thickness and uniformity of appearance.

Drying Schedule @ 5.0 mils wet (125 microns):

	30°F/-1.1°C	50°F/10°C	70°F/21°C	85°F/29°C	100°F/38°C
			50% RH		
To recoat:					
minimum:	32 hrs	16 hrs	8 hrs	4 hrs	2 hrs
Undocking*:	48 hrs	24 hrs	12 hrs	8 hrs	4 hrs

No maximum recoat time; however, any contamination must be removed by high pressure washing prior to applying the next coat.

*Undocking:

Minimum: depends on the number of coats applied, film thickness, and temperature.

Maximum: depends on the exposure conditions. Refer to Performance Tips section for details.

Shelf Life:	24 months, unopened Store indoors at 40°F (4.5°C) to 100°F (38°C)
Flash Point:	72°F (22°C), SETA Flash
Reducer/Clean Up:	VM&P Naphtha, R1K3

RECOMMENDED USES

For use on prepared surfaces in marine environments

- As an antifoulant for underwater hull and boot top on vessels operating in global trade with short to medium idle times.
- Use on vessels with a service speed exceeding 10 Knots.

PERFORMANCE CHARACTERISTICS

- Resists fouling
- Contains 49% Cuprous Oxide
- Colors

Red	P30RQ10
Black	P30BQ12
Blue	P30LQ13

continued on back

Protective & Marine Coatings

SEAGUARD® ABLATIVE ANTIFOULING COATING

P30RQ10 ..... RED
P30BQ12 ..... BLACK P30LQ13 ..... BLUE

Revised April 10, 2014

PRODUCT INFORMATION

9.12

RECOMMENDED SYSTEMS

		Dry Film Thickness / ct. Mils	(Microns)
Steel:			
2 cts.	SeaGuard 5000 HS	4.0 -7.0	(100-175)
1-3 cts.	SeaGuard Ablative Antifouling	2.5-4.0	(63-100)
NOTE:	Number of coats is dependent on specification, existing hull conditions, and intended service life.		
Steel:			
2 cts.	SeaGuard Underwater Hull HS Epoxy	5.0-7.0	(125-175)
2 cts.	SeaGuard Ablative Antifouling	2.5-4.0	(63-100)
NOTE:	Number of coats is dependent on specification and intended service life.		
Steel, keel to bottom of boottop:			
1 ct.	SeaGuard Underwater Hull HS Epoxy, red	5.0-7.0	(125-175)
1 ct.	SeaGuard Underwater Hull HS Epoxy, gray	5.0-7.0	(125-175)
1 ct.	SeaGuard Ablative Antifouling, red	2.5-4.0	(63-100)
1 ct.	SeaGuard Ablative Antifouling, Lt Red	2.5-4.0	(63-100)
1 ct.	SeaGuard Ablative Antifouling, red	2.5-4.0	(63-100)
Previously Painted:			
1-3 cts.	SeaGuard Ablative Antifouling	2.5-4.0	(63-100)
NOTE:	Number of coats is dependent on specification, existing hull conditions, and intended service life.		

The systems listed above are representative of the product's use, other systems may be appropriate.

DISCLAIMER

The information and recommendations set forth in this Product Data Sheet are based upon tests conducted by or on behalf of The Sherwin-Williams Company. Such information and recommendations set forth herein are subject to change and pertain to the product offered at the time of publication. Consult your Sherwin-Williams representative to obtain the most recent Product Data Information and Application Bulletin.

SURFACE PREPARATION

Surface must be clean, dry, and in sound condition. Remove all oil, dust, grease, dirt, loose rust, and other foreign material to ensure adequate adhesion.

Refer to product Application Bulletin for detailed surface preparation information.

Minimum recommended surface preparation:
Iron & Steel, bare: SSPC-SP10/NACE 2 (For anticorrosive primer coat)
Previously Painted: Clean, dry, sound

Surface Preparation Standards

	Condition of Surface	ISO 8501-1 BS7079:A1	Swedish Std. SIS055900	SSPC	NACE
White Metal		Sa 3	Sa 3	SP 5	1
Near White Metal		Sa 2.5	Sa 2.5	SP 10	2
Commercial Blast		Sa 2	Sa 2	SP 6	3
Brush-Off Blast		Sa 1	Sa 1	SP 7	4
Hand Tool Cleaning	Rusted	C St 2	C St 2	SP 2	-
	Pitted & Rusted	D St 2	D St 2	SP 2	-
Power Tool Cleaning	Rusted	C St 3	C St 3	SP 3	-
	Pitted & Rusted	D St 3	D St 3	SP 3	-

TINTING

Do not tint.

APPLICATION CONDITIONS

- Maximum application temperature is 120°F (49°C)
- Surface temperature must be at least 5°F (2.8°C) above the dew point
- No surface ice, moisture, or condensation may be allowed on the surface during application

ORDERING INFORMATION

Packaging: 5 gallon (18.9L) containers

Weight: 18.5 ± lb/gal ; 2.22 Kg/L

SAFETY PRECAUTIONS

Refer to the MSDS sheet before use.

Published technical data and instructions are subject to change without notice. Contact your Sherwin-Williams representative for additional technical data and instructions.

WARRANTY

The Sherwin-Williams Company warrants our products to be free of manufacturing defects in accord with applicable Sherwin-Williams quality control procedures. Liability for products proven defective, if any, is limited to replacement of the defective product or the refund of the purchase price paid for the defective product as determined by Sherwin-Williams. NO OTHER WARRANTY OR GUARANTEE OF ANY KIND IS MADE BY SHERWIN-WILLIAMS, EXPRESSED OR IMPLIED, STATUTORY, BY OPERATION OF LAW OR OTHERWISE, INCLUDING MERCHANTABILITY AND FITNESS FOR A PARTICULAR PURPOSE.

Protective & Marine Coatings

SEAGUARD® ABLATIVE ANTIFOULING COATING

P30RQ10 ..... RED
P30BQ12 ..... BLACK P30LQ13 ..... BLUE

Revised April 10, 2014

APPLICATION BULLETIN

9.12

SURFACE PREPARATIONS

Surface must be clean, dry, and in sound condition. Remove all oil, dust, grease, dirt, loose rust, and other foreign material to ensure adequate adhesion.

Iron & Steel, bare
Minimum surface preparation is Near White Blast Cleaning per SSPC-SP6/NACE 3. Remove all oil and grease from surface by Solvent Cleaning per SSPC-SP1. Blast clean all surfaces using a sharp, angular abrasive for optimum surface profile (2 mils / 50 microns). Remove all weld spatter and round all sharp edges. Prime any bare steel within 8 hours or before flash rusting occurs, with the appropriate anticorrosive primer. See recommended systems or contact your Sherwin-Willams Marine Representative.

Previously Painted Antifouling Surfaces
Remove possible oil, grease, etc. with suitable detergent.
Rinse using high pressure, fresh water cleaning, which will also remove any weak, outer layer of leached antifouling.
Allow the surface to dry before overcoating.
Whether or not to use a sealer coat over an existing antifouling depends on the type and condition of the existing antifouling.

Surface Preparation Standards

	Condition of Surface	ISO e501-1 BS7079:A1	Swedish Std. SIS055900	SSPC	NACE
White Metal		Sa 3	Sa 3	SP 5	1
Near White Metal		Sa 2.5	Sa 2.5	SP 10	2
Commercial Blast		Sa 2	Sa 2	SP 6	3
Brush-Off Blast		Sa 1	Sa 1	SP 7	4
Hand Tool Cleaning	Rusted	C St 2	C St 2	SP 2	-
	Pitted & Rusted	D St 2	D St 2	SP 2	-
Power Tool Cleaning	Rusted	C St 3	C St 3	SP 3	-
	Pitted & Rusted	D St 3	D St 3	SP 3	-

APPLICATION CONDITIONS

- Maximum application temperature is 120°F (49°C)
- Surface temperature must be at least 5°F (2.8°C) above the dew point
- No surface ice, moisture, or condensation may be allowed on the surface during application

APPLICATION EQUIPMENT

The following is a guide. Changes in pressures and tip sizes may be needed for proper spray characteristics. Always purge spray equipment before use with listed reducer. Any reduction must be compliant with existing VOC regulations and compatible with the existing environmental and application conditions.

Reducer/Clean Up .....VM&P Naphtha, R1K3

Airless Spray
Pressure.....3600 psi
Hose.....3/8" ID
Tip.....023" - .027"
Filter.....100 mesh
Reduction.....as needed up to 5% by volume

Brush
Brush.....Natural Bristle
Reduction.....as needed up to 5% by volume

Roller
Cover.....3/8" woven with solvent resistant core
Reduction.....as needed up to 5% by volume

If specific application equipment is not listed above, equivalent equipment may be substituted.

continued on back

Protective & Marine Coatings

SEAGUARD® ABLATIVE ANTIFOULING COATING

P30RQ10 ..... RED
P30BQ12 ..... BLACK P30LQ13 ..... BLUE

Revised April 10, 2014 **APPLICATION BULLETIN** 9.12

APPLICATION PROCEDURES

Surface preparation must be completed as indicated.

Mixing Instructions: Mix paint thoroughly with low speed power agitation prior to use. Make sure there is no settling on the bottom of the can.

Apply paint at the recommended film thickness and spreading rate as indicated below:

Recommended Spreading Rate per coat:

	Minimum	Maximum
Wet mils (microns)	4.0 (100)	7.0 (175)
Dry mils (microns)	2.5 (63)	4.0 (100)
~Coverage sq ft/gal (m^2/L)	260 (6.4)	430 (10.5)
Theoretical coverage sq ft/gal (m^2/L) @ 1 mil / 25 microns dft	1040 (25.5)	

NOTE: Brush or roll application may require multiple coats to achieve maximum film thickness and uniformity of appearance.

Drying Schedule @ 5.0 mils wet (125 microns):

	30°F/-1.1°C	50°F/10°C	70°F/21°C	85°F/29°C	100°F/38°C
			50% RH		
To recoat: minimum:	32 hrs	16 hrs	8 hrs	4 hrs	2 hrs
Undocking*:	48 hrs	24 hrs	12 hrs	8 hrs	4 hrs

No maximum recoat time; however, any contamination must be removed by high pressure washing prior to applying the next coat.

*Undocking:

Minimum: depends on the number of coats applied, film thickness, and temperature.

Maximum: depends on the exposure conditions. Refer to Performance Tips section for details.

Application of coating above maximum or below minimum recommended spreading rate may adversely affect coating performance.

CLEAN UP INSTRUCTIONS

Clean spills and spatters immediately with VM&P Naphtha, R1K3. Clean tools immediately after use with VM&P Naphtha, R1K3. Follow manufacturer's safety recommendations when using any solvent.

DISCLAIMER

The information and recommendations set forth in this Product Data Sheet are based upon tests conducted by or on behalf of The Sherwin-Williams Company. Such information and recommendations set forth herein are subject to change and pertain to the product offered at the time of publication. Consult your Sherwin-Williams representative to obtain the most recent Product Data information and Application Bulletin.

PERFORMANCE TIPS

When using spray application, use a 50% overlap with each pass of the gun to avoid holidays, bare areas, and pinholes. If necessary, cross spray at a right angle

Spreading rates are calculated on volume solids and do not include an application loss factor due to surface profile, roughness or porosity of the surface, skill and technique of the applicator, method of application, various surface irregularities, material lost during mixing, spillage, overthinning, climatic conditions, and excessive film build.

Excess reduction of material is not recommended as it can affect film build, appearance, and adhesion.

In order to avoid blockage of spray equipment, clean equipment before use or before periods of extended downtime with VM&P Naphtha, R1K3.

When applying over the recommended epoxy coat, the epoxy shall be tacky, but not hard. "Tacky" is defined as that curing (drying) stage when a fingertip pressed lightly against the film leaves only a slight impression and none of the film sticks to the finger.

By providing a constantly active surface during its lifetime, this antifouling is gradually sacrificed in the process. The color of the system changes in accordance with the colors of the coats applied, e. g.: Light red changes to whitish in direct contact with seawater.

Indicated film thickness will vary according to specification. This will alter spreading rate and may influence drying time. In case of multi-coat application, drying time and minimum overcoating interval will be influenced by the number of coats and by the thickness of each coat applied.

Overcoating: No maximum overcoating interval, but after prolonged exposure to polluted atmosphere, remove accumulated contamination by high pressure fresh water cleaning and allow to dry before applying next coat.

Undocking: Minimum undocking time depends on number of coats applied, film thickness, and the prevailing temperature.

Maximum undocking time depends on the exposure conditions, degree of air pollution, etc. The most important factor is to carry out a thorough high pressure fresh water cleaning after prolonged exposure. Outfitting of up to 6 months followed by such cleaning normally presents no problem. Longer outfitting periods to be evaluated from case to case. The recommended maximum undocking interval relates to vertical bottom only. Flat bottom, which has not been exposed to direct sunlight, will for all normal practical building schedules have a no-maximum value.

Refer to Product Information sheet for additional performance characteristics and properties.

SAFETY PRECAUTIONS

Refer to the MSDS sheet before use.

Published technical data and instructions are subject to change without notice. Contact your Sherwin-Williams representative for additional technical data and instructions.

WARRANTY

The Sherwin-Williams Company warrants our products to be free of manufacturing defects in accord with applicable Sherwin-Williams quality control procedures. Liability for products proven defective, if any, is limited to replacement of the defective product or the refund of the purchase price paid for the defective product as determined by Sherwin-Williams. NO OTHER WARRANTY OR GUARANTEE OF ANY KIND IS MADE BY SHERWIN-WILLIAMS, EXPRESSED OR IMPLIED, STATUTORY, BY OPERATION OF LAW OR OTHERWISE, INCLUDING MERCHANTABILITY AND FITNESS FOR A PARTICULAR PURPOSE.

Protective & Marine Coatings

SEAGUARD VOID COAT LT

WATER BASED BARGE COATING

LOW TEMPERATURE VERSION

P31A15

Revised 11/10

PRODUCT INFORMATION

PRODUCT DESCRIPTION

SEAGUARD VOID COAT LT is a premium grade, single component, water based coating containing no HAPS and very low VOC. This coating is a modified version of the Seaguard Void Coat. The coating has been modified for application in low temperature conditions. This coating is intended for application to buoyancy and bilge tanks in fresh and salt water barges/vessels. Because the coating contains antibacterial components it should not be used to line tanks that will be utilized for potable water.

PRODUCT CHARACTERISTICS

Finish:	Semi-Gloss
Color:	Gray
Volume Solids:	65%
Weight Solids:	72%
VOC (less water):	0.5 lb/gal

Theoretical Coverage @ 5 mils dry:
208 sq. feet per gallon (100% transfer efficiency)

Drying Schedule @ 10.0 mils wet @ 50% RH:

	@ 20°F
To touch:	2 hours
To cure:	24 hours

Drying time is temperature, humidity, and film thickness dependent.

Shelf Life:	12 months
Flast Point:	110°F
Reducer/Clean up:	No reduction required Clean up with water

RECOMMENDED USES

- Highly resistant to tobacco juicing
- Can be applied in cold winter temperatures
- Extreme corrosion protection
- HAPS free
- High film build capability
- Suitable for severe atmospheric corrosion protection
- Little or no pretreatment required
- Resistant to high pressure steam cleaning
- Effective in Fresh and Salt Water Barges/Vessels
- Well filtered before packaging with the consequence that an entire barge can be coated without once stopping to unclog the spray tip

PERFORMANCE CHARACTERISTICS

Test Name	Test Method	Results
Corrosion Resistance	ASTM B117	Passes (336 hours)
Direct Impact Resistance	ASTM D2794	160 in. lbs.
High Temperature Resistance		Dry film will not flow <450°F
Reverse Impact Resistance	ASTM D2794	20 in. lbs.
Salt Water Immersion	ASTM D870-97	Passes (336 hours)
Tobacco Juicing	Staining of film applied to wet steel in 95% humidity	Pass

continued on back

Protective & Marine Coatings

SEAGUARD VOID COAT LT
WATER BASED BARGE COATING
LOW TEMPERATURE VERSION

P31A15

PRODUCT INFORMATION

RECOMMENDED SYSTEMS

		Dry Film Thickness / ct. Mils
Steel, alkyd primer:		
1 ct.	Seaguard Void Coat LT	5.0-10.0

(Airless spray application is recommended using 30:1 ratio or greater with .017 - .037 tip.)

The systems listed above are representative of the product's use, other systems may be appropriate.

CLEAN UP INSTRUCTIONS

Clean spills and spatters immediately with soap and warm water. Clean hands and tools immediately after use with soap and warm water. After cleaning, flush spray equipment with Mineral Spirits to prevent rusting of the equipment. Follow manufacturer's safety recommendations when using Mineral Spirits.

DISCLAIMER

The information and recommendations set forth in this Product Data Sheet are based upon tests conducted by or on behalf of The Sherwin-Williams Company. Such information and recommendations set forth herein are subject to change and pertain to the product offered at the time of publication. Consult your Sherwin-Williams representative to obtain the most recent Product Data information and Application Bulletin.

SURFACE PREPARATION

Surface must be clean, dry, and in sound condition. Remove all oil, dust, grease, dirt, loose rust, and other foreign material to ensure adequate adhesion.

This product is thixotropic similar to ketchup, mixing may be required to provide optimum flow characteristics. If the product has been exposed to extremely cold temperatures, mixing may be necessary to restore product to a flowable liquid. Mixing is recommended prior to use.

TINTING

Tinting not recommended.

APPLICATION CONDITIONS

Temperature: air and surface:	20°F minimum, 120°F maximum (heater and dehumidifier are often utilized)
Relative humidity:	At least 5°F above dew point

ORDERING INFORMATION

Packaging:	5, 55, and 330 gallon containers
Weight per gallon:	10.4 ± 0.2 lb

SAFETY PRECAUTIONS

- Refer to the MSDS sheet before use.
- Protect from freezing
- Published technical data and instructions are subject to change without notice. Contact your Sherwin-Williams representative for additional technical data and instructions.

FOR INDUSTRIAL USE ONLY

WARRANTY

The Sherwin-Williams Company warrants our products to be free of manufacturing defects in accord with applicable Sherwin-Williams quality control procedures. Liability for products proven defective, if any, is limited to replacement of the defective product or the refund of the purchase price paid for the defective product as determined by Sherwin-Williams. NO OTHER WARRANTY OR GUARANTEE OF ANY KIND IS MADE BY SHERWIN-WILLIAMS, EXPRESSED OR IMPLIED, STATUTORY, BY OPERATION OF LAW OR OTHERWISE, INCLUDING MERCHANTABILITY AND FITNESS FOR A PARTICULAR PURPOSE.

Protective & Marine Coatings

ACROLON™ 218 HS
ACRYLIC POLYURETHANE

PART A	B65-600	GLOSS SERIES
PART A	B65-650	SEMI-GLOSS SERIES
PART B	B65V600	HARDENER

Revised: September 5, 2014

PRODUCT INFORMATION

5.22

PRODUCT DESCRIPTION

ACROLON 218 HS is a low VOC, polyester modified, aliphatic, acrylic polyurethane formulated specifically for in-shop applications. Also suitable for industrial applications. A fast drying, urethane that provides color and gloss retention for exterior exposure.

- Can be used directly over organic zinc rich primers (epoxy zinc primer and moisture cure urethane zinc primer)
- Color and gloss retention for exterior exposure
- Fast dry
- Outstanding application properties

PRODUCT CHARACTERISTICS

Finish:	Gloss or Semi-Gloss
Color:	Wide range of colors available
Volume Solids:	65% ± 2%, mixed, may vary by color
Weight Solids:	78% ± 2%, mixed, may vary by color
VOC (EPA Method 24):	Unreduced: <300 g/L; 2.5 lb/gal
mixed	Reduced 10% with R7K15: <340 g/L; 2.8 lb/gal
mixed	Reduced 9% with MEK, R6K10: <340 g/L; 2.8 lb/gal
Mix Ratio:	6:1 by volume, 1 gallon or 5 gallon mixes premeasured components

Recommended Spreading Rate per coat:

	Minimum	Maximum
Wet mils (microns)	4.5 (112.5)	9.0 (225)
Dry mils (microns)	3.0 (75)	6.0 (150)
~Coverage sq ft/gal (m^2/L)	175 (4.3)	346 (8.5)
Theoretical coverage sq ft/gal (m^2/L) @ 1 mil / 25 microns dft	1040 (25.5)	

NOTE: Brush or roll application may require multiple coats to achieve maximum film thickness and uniformity of appearance.

Drying Schedule @ 6.0 mils wet (150 microns):

	@ 35°F/1.7°C	@ 77°F/25°C 50% RH	@ 120°F/49°C
To touch:	4 hours	30 minutes	20 minutes
To handle:	18 hours	6 hours	4 hours
To recoat:			
minimum:	18 hours	8 hours	6 hours
maximum:	3 months	3 months	3 months
To cure:	14 days	7 days	5 days
Pot Life: (reduced 5% with Reducer R7K15)	4 hours	2 hours	45 minutes
Sweat-in-Time:		None	

If maximum recoat time is exceeded, abrade surface before recoating. Drying time is temperature, humidity, and film thickness dependent.
Paint temperature must be at least 40°F (4.5°C) minimum.

Shelf Life:	Part A* - 36 months, unopened Part B - 24 months, unopened Store indoors at 40°F (4.5°C) to 100°F (38°C).

*Aluminum (Part A, Rex # B65SW655) has a shelf life of 24 months.

Flash Point:	55°F (13°C), Seta, mixed
Reducer/Clean Up:	
Spray:	Reducer R7K15, MEK R6K10, or R7K111
Brush / Roll:	Reducer #132, R7K132 or R7K111

RECOMMENDED USES

Specifically formulated for in-shop applications.
For use over prepared metal and masonry surfaces in industrial environments such as:

- Structural steel
- Rail cars and locomotives
- Conveyors
- Bridges
- Tank exteriors
- Pipelines
- Ships
- Wind Towers - onshore and offshore
- Offshore platforms - exploration and production
- Suitable for use in USDA inspected facilities
- Conforms to AWWA D102 Outside Coating Systems #4 (OCS-4), #5 (OCS-5) & #6 (OCS-6)
- Acceptable for use in high performance architectural applications
- Acceptable for use over Stampede 1 and Stampede 1H Caulking
- A component of INFINITANK
- Over FIRETEX hydrocarbon systems
- Suitable for use in the Mining & Minerals Industry

PERFORMANCE CHARACTERISTICS

Substrate*: Steel

Surface Preparation*: SSPC-SP10/NACE 2

System Tested*:
1 ct. Macropoxy 646 @ 6.0 mils (150 microns) dft
1 ct. Acrolon 218 HS Gloss @ 4.0 mils (100 microns) dft
*unless otherwise noted below

Test Name	Test Method	Results
Abrasion Resistance[1]	ASTM D4060, CS17 wheel, 1000 cycles, 1 kg load	43 mg loss
Adhesion[3]	ASTM D4541	1976 psi
Corrosion Weathering[3]	ASTM D5894, 27 cycles, 9072 hours	Rating 10 per ASTM D610, for rusting; Rating 10 per ASTM D714, for blistering
Direct Impact Resistance[1]	ASTM D2794	50 in. lb.
Dry Heat Resistance[1]	ASTM D2485, Method A	200°F (93°C)
Flexibility[1]	ASTM D522, 180° bend, 1/8" mandrel	Passes
Humidity Resistance[2]	ASTM D4585, 100°F (38°C), 1500 hours	Rating 10 per ASTM D610, for rusting; Rating 10 per ASTM D714, for blistering
Pencil Hardness	ASTM D3363	3H
Salt Fog Resistance[3]	ASTM B117, 15,000 hours	Rating 10 per ASTM D610, for rusting; Rating 10 per ASTM D714, for blistering

Meets the requirements of SSPC Paint No. 36, Level 3 for white and light colors. Dark colors may require a clear coat.

Complies with ISO 12944-5 C5I and C5M requirements.

Footnotes:
[1] *Finish coat only tested*
[2] *Primer* — *Zinc-Clad II Plus*
Intermediate — *Macropoxy 646*
Finish — *Acrolon 218 HS*
[3] *Primer* — *Zinc-Clad III HS*

continued on back

Protective & Marine Coatings

ACROLON™ 218 HS
ACRYLIC POLYURETHANE

PART A	B65-600	GLOSS SERIES
PART A	B65-650	SEMI-GLOSS SERIES
PART B	B65V600	HARDENER

Revised: September 5, 2014

PRODUCT INFORMATION

5.22

RECOMMENDED SYSTEMS

		Dry Film Thickness / ct. Mils	(Microns)
Steel:			
1 ct.	Macropoxy 646	5.0-10.0	(125-250)
1-2 cts.	Acrolon 218 HS Polyurethane	3.0-6.0	(75-150)
Steel:			
1 ct.	Zinc Clad II Plus	3.0-5.0	(75-125)
1 ct.	Macropoxy 646	5.0-10.0	(125-250)
1-2 cts.	Acrolon 218 HS Polyurethane	3.0-6.0	(75-150)
Steel:			
1 ct.	Zinc Clad IV	3.0-5.0	(75-125)
1-2 cts.	Acrolon 218 HS Polyurethane	3.0-6.0	(75-150)
Steel:			
1 ct.	Corothane I-GalvaPac Zinc Primer	3.0-4.0	(75-100)
1-2 cts.	Acrolon 218 HS Polyurethane	3.0-6.0	(75-150)
Steel:			
1 ct.	Epoxy Mastic Aluminum II	6.0	(150)
1-2 cts.	Acrolon 218 HS Polyurethane	3.0-6.0	(75-150)
Steel:			
1 ct.	Recoatable Epoxy Primer	4.0-6.0	(100-150)
1-2 cts.	Acrolon 218 HS Polyurethane	3.0-6.0	(75-150)
Concrete/Masonry:			
1 ct.	Kem Cati-Coat HS Epoxy Filler/Sealer	10.0-20.0	(250-500)
1-2 cts.	Acrolon 218 HS Polyurethane	3.0-6.0	(75-150)
Aluminum/Galvanizing:			
1 ct.	DTM Wash Primer	0.7-1.3	(18-32)
1-2 cts.	Acrolon 218 HS Polyurethane	3.0-6.0	(75-150)
ISO 12944 C5M System:			
1 ct.	Zinc Clad III HS	3.0-5.0	(75-125)
1 ct.	Tower Guard Epoxy	5.0-11.5	(125-287.5)
1 ct.	Acrolon 218 HS Polyurethane	3.0-6.0	(75-150)

FIRETEX ONLY:
Finish Coat for FIRETEX Hydrocarbon Systems:
1 ct. Acrolon 218 HS Polyurethane*
*Consult FIRETEX PFP Specialist for recommended dft range

The systems listed above are representative of the product's use, other systems may be appropriate.

DISCLAIMER

The information and recommendations set forth in this Product Data Sheet are based upon tests conducted by or on behalf of The Sherwin-Williams Company. Such information and recommendations set forth herein are subject to change and pertain to the product offered at the time of publication. Consult your Sherwin-Williams representative to obtain the most recent Product Data Information and Application Bulletin.

SURFACE PREPARATION

Surface must be clean, dry, and in sound condition. Remove all oil, dust, grease, dirt, loose rust, and other foreign material to ensure adequate adhesion.

Refer to product Application Bulletin for detailed surface preparation information.

Minimum recommended surface preparation:
* Iron & Steel: SSPC-SP6/NACE 3, 1-2 mil (25-50 micron) profile
* Galvanizing: SSPC-SP1
* Concrete & Masonry: SSPC-SP13/NACE 6, or ICRI No. 310.2R, CSP 1-3
* Primer required

Surface Preparation Standards

	Condition of Surface	ISO 8501-1 BS7079:A1	Swedish Std. SIS055900	SSPC	NACE
White Metal		Sa 3	Sa 3	SP 5	1
Near White Metal		Se 2.5	Se 2.5	SP 10	2
Commercial Blast		Sa 2	Sa 2	SP 6	3
Brush-Off Blast		Sa 1	Sa 1	SP 7	4
Hand Tool Cleaning	Rusted	C St 2	C St 2	SP 2	-
	Pitted & Rusted	D St 2	D St 2	SP 2	-
Power Tool Cleaning	Rusted	C St 3	C St 3	SP 3	-
	Pitted & Rusted	D St 3	D St 3	SP 3	-

TINTING

Tint Part A with Maxitoner Colorants.
- Extra white tints at 100% tint strength
- Ultradeep base tints at 150% tint strength

Five minutes minimum mixing on a mechanical shaker is required for complete mixing of color.

APPLICATION CONDITIONS

Temperature:	35°F (1.7°C) minimum, 120°F (49°C) maximum (air and surface) 40°F (4.5°C) minimum, 120°F (49°C) maximum (material) At least 5°F (2.8°C) above dew point
Relative humidity:	85% maximum

Refer to product Application Bulletin for detailed application information.

ORDERING INFORMATION

Packaging:	1 gallon (3.78L) mix:	5 gallon (18.9L) mix:
Part A:	.86 gal (3.25L)	4.29 gal (16.2L)
Part B: (premeasured components)	.14 gal (0.53L)	0.71 gal (2.7L)

Weight: 11.2 ± 0.2 lb/gal ; 1.3 Kg/L mixed, may vary with color

SAFETY PRECAUTIONS

Refer to the MSDS sheet before use.

Published technical data and instructions are subject to change without notice. Contact your Sherwin-Williams representative for additional technical data and instructions.

WARRANTY

The Sherwin-Williams Company warrants our products to be free of manufacturing defects in accord with applicable Sherwin-Williams quality control procedures. Liability for products proven defective, if any, is limited to replacement of the defective product or the refund of the purchase price paid for the defective product as determined by Sherwin-Williams. NO OTHER WARRANTY OR GUARANTEE OF ANY KIND IS MADE BY SHERWIN-WILLIAMS, EXPRESSED OR IMPLIED, STATUTORY, BY OPERATION OF LAW OR OTHERWISE, INCLUDING MERCHANTABILITY AND FITNESS FOR A PARTICULAR PURPOSE.

Protective & Marine Coatings

ACROLON™ 218 HS
ACRYLIC POLYURETHANE

PART A	B65-600	GLOSS SERIES
PART A	B65-650	SEMI-GLOSS SERIES
PART B	B65V600	HARDENER

Revised: September 5, 2014

APPLICATION BULLETIN

5.22

SURFACE PREPARATIONS

Surface must be clean, dry, and in sound condition. Remove all oil, dust, grease, dirt, loose rust, and other foreign material to ensure adequate adhesion.

Iron & Steel
Remove all oil and grease from surface by Solvent Cleaning per SSPC-SP1. Minimum surface preparation is Commercial Blast Cleaning per SSPC-SP6/NACE 3. For better performance, use Near White Metal Blast Cleaning per SSPC-SP10/NACE 2. Blast clean all surfaces using a sharp, angular abrasive for optimum surface profile (1-2 mils / 25-50 microns). Prime any bare steel the same day as it is cleaned or before flash rusting occurs.

Aluminum
Remove all oil, grease, dirt, oxide and other foreign material by Solvent Cleaning per SSPC-SP1. Primer required.

Galvanized Steel
Allow to weather a minimum of six months prior to coating. Solvent Clean per SSPC-SP1. When weathering is not possible, or the surface has been treated with chromates or silicates, first Solvent Clean per SSPC-SP1 and apply a test patch. Allow paint to dry at least one week before testing adhesion. If adhesion is poor, brush blasting per SSPC-SP7 is necessary to remove these treatments. Rusty galvanizing requires a minimum of Hand Tool Cleaning per SSPC-SP2, prime the area the same day as cleaned or before flash rusting occurs. Primer required.

Concrete and Masonry
For surface preparation, refer to SSPC-SP13/NACE 6, or ICRI No. 310.2R, CSP 1-3. Surfaces should be thoroughly clean and dry. Concrete and mortar must be cured at least 28 days @ 75°F (24°C). Remove all loose mortar and foreign material. Surface must be free of laitance, concrete dust, dirt, form release agents, moisture curing membranes, loose cement and hardeners. Fill bug holes, air pockets and other voids with Steel-Seam FT910. Primer required.

Follow the standard methods listed below when applicable:
ASTM D4258 Standard Practice for Cleaning Concrete.
ASTM D4259 Standard Practice for Abrading Concrete.
ASTM D4260 Standard Practice for Etching Concrete.
ASTM F1869 Standard Test Method for Measuring Moisture Vapor Emission Rate of Concrete.
SSPC-SP 13/Nace 6 Surface Preparation of Concrete.
ICRI No. 310.2R Concrete Surface Preparation.

Surface Preparation Standards

	Condition of Surface	ISO 8501-1 BS7079:A1	Swedish Std. SIS055900	SSPC	NACE
White Metal		Sa 3	Sa 3	SP 5	1
Near White Metal		Sa 2.5	Sa 2.5	SP 10	2
Commercial Blast		Sa 2	Sa 2	SP 6	3
Brush-Off Blast		Sa 1	Sa 1	SP 7	4
Hand Tool Cleaning	Rusted	C St 2	C St 2	SP 2	-
	Pitted & Rusted	D St 2	D St 2	SP 2	-
Power Tool Cleaning	Rusted	C St 3	C St 3	SP 3	-
	Pitted & Rusted	D St 3	D St 3	SP 3	-

APPLICATION CONDITIONS

Temperature: 35°F (1.7°C) minimum, 120°F (49°C) maximum (air and surface)
40°F (4.5°C) minimum, 120°F (49°C) maximum (material)
At least 5°F (2.8°C) above dew point

Relative humidity: 85% maximum

APPLICATION EQUIPMENT

The following is a guide. Changes in pressures and tip sizes may be needed for proper spray characteristics. Always purge spray equipment before use with listed reducer. Any reduction must be compliant with existing VOC regulations and compatible with the existing environmental and application conditions.

Reducer/Clean Up:
Spray.....Reducer R7K15, MEK R6K10, or R7K111
Brush/Roll .....Reducer #132, R7K132, or R7K111
If reducer is used, reduce at time of catalyzation.

Airless Spray
Pressure.....2500 - 2800 psi
Hose.....3/8" ID
Tip.....013" - .017"
Filter.....60 mesh
Reduction.....As needed up to 10% by volume with R7K15 or R7K111, or up to 9% with MEK, R6K10*

Conventional Spray
Gun .....Binks 95
Cap 63P
Atomization Pressure.....50 - 70 psi
Fluid Pressure.....20 - 25 psi
Reduction.....As needed up to 10% by volume with R7K15 or R7K111, or up to 9% with MEK, R6K10*

Brush
Brush.....Natural Bristle
Reduction.....As needed up to 10% by volume*

Roller
Cover .....3/8" woven with solvent resistant core
Reduction.....As needed up to 10% by volume*

If specific application equipment is not listed above, equivalent equipment may be substituted.

* Note: Reducing more than maximum recommended level will result in VOC exceeding 340g/L

continued on back

Protective & Marine Coatings

ACROLON™ 218 HS
ACRYLIC POLYURETHANE

PART A	B65-600	GLOSS SERIES
PART A	B65-650	SEMI-GLOSS SERIES
PART B	B65V600	HARDENER

Revised: September 5, 2014

APPLICATION BULLETIN

APPLICATION PROCEDURES

Surface preparation must be completed as indicated.

Mix contents of each component thoroughly with low speed power agitation. Make certain no pigment remains on the bottom of the can. Then combine six parts by volume of Part A with one part by volume of Part B (premeasured components). Thoroughly agitate the mixture with power agitation. Re-stir before using.

If reducer is used, add only after both components have been thoroughly mixed.

Apply paint at the recommended film thickness and spreading rate as indicated below:

Recommended Spreading Rate per coat:

	Minimum	Maximum
Wet mils (microns)	4.5 (112.5)	9.0 (225)
Dry mils (microns)	3.0 (75)	6.0 (150)
~Coverage sq ft/gal (m^2/L)	175 (4.3)	346 (8.5)
Theoretical coverage sq ft/gal (m^2/L) @ 1 mil / 25 microns dft	1040 (25.5)	

NOTE: Brush or roll application may require multiple coats to achieve maximum film thickness and uniformity of appearance.

Drying Schedule @ 6.0 mils wet (150 microns):

	@ 35°F/1.7°C	@ 77°F/25°C 50% RH	@ 120°F/49°C
To touch:	4 hours	30 minutes	20 minutes
To handle:	18 hours	6 hours	4 hours
To recoat:			
minimum:	18 hours	8 hours	6 hours
maximum:	3 months	3 months	3 months
To cure:	14 days	7 days	5 days
Pot Life: (reduced 5% with Reducer R7K15)	4 hours	2 hours	45 minutes
Sweat-in-Time:		None	

If maximum recoat time is exceeded, abrade surface before recoating. Drying time is temperature, humidity, and film thickness dependent. Paint temperature must be at least 40°F (4.5°C) minimum.

Application of coating above maximum or below minimum recommended spreading rate may adversely affect coating performance.

CLEAN UP INSTRUCTIONS

Clean spills and spatters immediately with Reducer #132, R7K132. Clean tools immediately after use with Reducer #132, R7K132. Follow manufacturer's safety recommendations when using any solvent.

DISCLAIMER

The information and recommendations set forth in this Product Data Sheet are based upon tests conducted by or on behalf of The Sherwin-Williams Company. Such information and recommendations set forth herein are subject to change and pertain to the product offered at the time of publication. Consult your Sherwin-Williams representative to obtain the most recent Product Data Information and Application Bulletin.

PERFORMANCE TIPS

Stripe coat all crevices, welds, and sharp angles to prevent early failure in these areas.

When using spray application, use a 50% overlap with each pass of the gun to avoid holidays, bare areas, and pinholes. If necessary, cross spray at a right angle.

Spreading rates are calculated on volume solids and do not include an application loss factor due to surface profile, roughness or porosity of the surface, skill and technique of the applicator, method of application, various surface irregularities, material lost during mixing, spillage, overthinning, climatic conditions, and excessive film build.

Excessive reduction of material can affect film build, appearance, and adhesion.

Do not apply the material beyond recommended pot life.

Do not mix previously catalyzed material with new.

In order to avoid blockage of spray equipment, clean equipment before use or before periods of extended downtime with Reducer #15, R7K15 or MEK, R6K10.

Mixed coating is sensitive to water. Use water traps in all air lines. Moisture contact can reduce pot life and affect gloss and color.

Quick-Thane Urethane Accelerator is acceptable for use. See data page 5.97 for details.

E-Z Roll Urethane Defoamer is acceptable for use. See data page 5.99 for details.

Refer to Product Information sheet for additional performance characteristics and properties.

SAFETY PRECAUTIONS

Refer to the MSDS sheet before use.

Published technical data and instructions are subject to change without notice. Contact your Sherwin-Williams representative for additional technical data and instructions.

WARRANTY

The Sherwin-Williams Company warrants our products to be free of manufacturing defects in accord with applicable Sherwin-Williams quality control procedures. Liability for products proven defective, if any, is limited to replacement of the defective product or the refund of the purchase price paid for the defective product as determined by Sherwin-Williams. NO OTHER WARRANTY OR GUARANTEE OF ANY KIND IS MADE BY SHERWIN-WILLIAMS, EXPRESSED OR IMPLIED, STATUTORY, BY OPERATION OF LAW OR OTHERWISE, INCLUDING MERCHANTABILITY AND FITNESS FOR A PARTICULAR PURPOSE.

Amercoat 235
Multi Purpose Epoxy Coating

Product Data/ Application Instructions

- Salt and fresh water resistant
- High performance, self priming multi-purpose epoxy
- Can be applied over mechanically cleaned steel and suitably prepared concrete
- Adheres to most types of existing coating systems
- Cures even below 0°C
- If required Amercoat 235 can be overcoated with a wide range of topcoats
- Fast dry, can be recoated after 4 hours

Typical Uses
Specially formulated as a high performance coating for marine and industrial facilities, ballast tanks, bilges, wet voids and draining pipes, above and below water hulls. On steel and concrete structures in industrial facilities, bridges, tank exteriors, containers, oil tanks, piping, roofs and other areas subject to moisture, high humidity, marine weathering and other exposure. Amercoat 235 has good resistance to splash, spillage and fumes of acids, alkalies, solvents, fresh and salt water.

Approvals and Certificates
Classified by Marintek, as class B1 for use in ballast water tanks.
Approved by Lloyd's Register as a ballast tank coating.
Passes the requirements for ballast tanks to MIL-P-23236B (SH), type I and IV Class 2.
USDA approval for incidental food contact.
Approved by Canada Health and Welfare for railcars, dry food and fish holds (off white and buff only).
Meets the requirements of STG guideline 2220 regarding compatibility with cathodic protection.

Outstanding Characteristics
Amercoat 235 can be used as a high performance maintenance coating with excellent adhesion to a wide range of existing coatings. For corroded areas, Amercoat 235 can be applied to mechanically cleaned surfaces. Adhesion is excellent to a wide variety of substrates, including concrete, aluminium and galvanized surfaces. Amercoat 235 has excellent application characteristics. It can be applied by conventional and airless spray equipment, brush or roller.

Physical Data

Finish	semi-gloss
Colours	limited number of colours *
Components	2
Mixing ratio (by volume)	
resin	4 parts
cure	1 part
Curing mechanism	solvent release and chemical reaction between components
Volume solids	68% (ISO 3233)
VOC**	
EC SED 1999/13/EC	229 g/kg (301 g/l)
UK PG6/23(92) Appendix 3	292 g/l (2.4 lbs/gal)
Dry film thickness	100 - 200 µm per coat
Number of coats	1 - 3
Calculated coverage	6.8 m^2/l at 100 µm
	3.4 m^2/l at 200 µm

Allow for application losses, surface irregularities, etc.

Specific gravity	approx. 1.2 kg/l depending on colour (mixed product)
Flash points (Closed Cup)	
resin	28°C/82°F
cure	41°C/106°F
Thinner 21-06	24°C/75°F

Chemical Resistance; environment suitability of Amercoat 235

	Splash and spillage	Fumes and weathering
Acidic	Fair	Good
Alkaline	Excellent	Excellent
Solvents	Excellent	Excellent
Salt solutions		
acidic	Good	Very Good
neutral	Excellent	Excellent
alkaline	Excellent	Excellent
Water	Excellent	Excellent

This chart is only a guide to show typical resistance of Amercoat 235. Contact your PPG representative for your specific requirements.
*Surface discolouration might occur on exposure to outside weathering, UV light, elevated temperatures or chemicals; however, product performance is not affected.

** VOC figures are quoted according to both the EC directive 1999/13/EC which are theoretically calculated figures and the UK PG6/23(92) Appendix 3 which are practically determined figures.

Amercoat 235

Topcoating
If a further topcoat is requested a wide range of different types is available. Contact your PPG representative for specific recommendations.

Application Data Summary
For complete information on procedures, equipment and safety precautions, see application instructions. Like all high performance coatings, Amercoat 235 must be applied as recommended to obtain the maximum protection for which this coating is formulated.
SURFACE PREPARATION - Abrasive blasting, or mechanical cleaning, depending on conditions. Existing coatings must be sound adhering and properly cleaned before applying Amercoat 235 as a maintenance topcoat.
EQUIPMENT - Standard industrial spray equipment, either airless or conventional, brush or roller. When applied by brush or roller additional coats may be required to reach specified dry film thickness.

Surface Preparation

Coating performance in general, is proportional to the degree of surface preparation. Abrasive blasting is usually the most effective and economical method. For circumstances where this is impossible or impractical, Amercoat 235 can be applied over mechanically cleaned surfaces.
STEEL, NON-IMMERSION - Amercoat 235 can be applied over mechanically cleaned surfaces. Remove water, salt, dirt, oil, loose rust and all rust scale. It is recommended to treat all surfaces with Amercoat 88 cleaner followed by high pressure water wash. Power tool clean in accordance with St 3 or SSPC SP-3 or hand tool clean in accordance with St 2 or SSPC SP-2. Water blasting is also acceptable. If possible, abrasive blasting to Sa 2½ is preferred. Amercoat 235 can be applied over damp structures, but condensation on top of the wet coating must be avoided.
STEEL, IMMERSION - Remove water, salt, dirt, oil, loose rust and all rust scale. It is recommended to treat all surfaces with Amercoat 88 cleaner followed by high pressure water wash. Blast to achieve Sa 2½ or SSPC SP-10. If blasting is impossible or impractical, surface preparation by power tool cleaning St 3 / SSPC SP-3 or high pressure water blast cleaning to D VIS WJ 3L is acceptable.
CONCRETE - Surfaces must be cured, clean, dry and free of non adherent coatings and disintegrated or chalky materials.
EXISTING COATINGS - Amercoat 235 may be used over most types of properly cleaned, tightly adhering coatings. In case existing coating system is unknown or based on conventional binders a test patch is recommended.

Application Equipment
The following equipment is listed as a partial guide and suitable equipment from other manufacturers may be used. Adjustments of pressure and change of tip size may be needed to achieve the proper spray characteristics.
AIRLESS SPRAY - Standard airless spray equipment, such as Graco Bulldog Hydra or larger with a 0.53 mm (0.021 inch) fluid tip or larger.
CONVENTIONAL SPRAY - Industrial equipment such as De Vilbiss MBC or JGA or Binks 18 or 62 spray gun. A moisture and oil trap in the main air supply line, a pressure material pot with mechanical agitator and separate regulators for air and fluid pressure are recommended.
MIXER - Use power mixer powered by an air motor or explosion proof electric motor.
BRUSH OR ROLLER - Use clean, short bristled brush or medium nap roller. Application by brush or roller will require at least 2 coats to achieve 125 µm dry film thickness

Application Data

Substrate ..... steel, concrete or tightly adhering existing coatings

Application methods ..... by airless or conventional spray, brush or roller*

Environmental conditions

Air temperature	-18 to 50°C	0 – 122°F
Surface temperature	-18 to 60°C	0 – 140°F

The surface temperature must be at least 3°C/5°F above the dew point to prevent moisture condensation.

Potlife (at 20°C/68°F) ..... 5 hours

Induction time (at 20°C/68°F) 15 minutes

Drying Times (at 125 µm dft, (°C/°F)	10/50	20/68	30/86
dry through (hours).....	12	10	7
fully cured (days).....	7	6	5
dry to recoat (hours).....	6	4	3

Maximum recoat time with epoxies is 4 weeks and with Amercoat 450S it is one week

Maximum recoating/topcoating times are dependent on temperature, degree of weathering, type of topcoat and service conditions of the complete coating system. Consult your PPG representative for specific recommendations. Drying times are dependent on temperature, ventilation and film thickness.

Thinner/cleaner ..... Thinner 21-06

* Brush or roller application may require additional coats.

Revision date:09-28-2009

Amercoat 235

Application Procedure

Amercoat 235 is packaged in two components in the proper proportions which must be mixed together before use.

Resin	16 l in 20 l can
Cure	4 l in 5 l can

1. Flush equipment with recommended cleaner before use.
2. Stir both resin and cure to an even consistency with a power mixer.
3. Add cure to resin and continue stirring for 5 minutes. Note: since the potlife is limited end shortened by high temperatures, do not mix more material then will be used within potlife (5 hours at 20°C/68°F).
4. For conventional spray, thin only as needed for workability with no more than 10 % by volume of recommended thinner. Thinning is normally not needed for airless spray.
5. Stir during application to maintain uniformity of material. Apply a wet coat in even parallel passes. Overlap each pass 50% to avoid bare areas, pinholes or holidays. Give special attention to corners, welds, rough areas, edges.
6. Normal recommended dry film thickness per coat is 100 to 200 µm. Maximum dry film thickness per coat should not exceed 250 µm per coat.
7. The application of a wet film thickness of 150 to 300 µm will normally provide 100 to 200 µm of dry film. When applied by brush or roller two or more coats will be necessary to achieve recommended dry film thickness.
8. Check thickness of dry coating with a non destructive dry film thickness gauge such as Mikrotest or Eicometer. If less than specified thickness, apply additional material as needed.
9. Small damaged or bare areas and random pinholes or holidays can be touched up by brush.

Clean all equipment with recommended cleaner immediately after use or at least at the end of each working day or shift. When left in spray equipment, Amercoat 235 will cure and cause clogging

Shipping Data

Packaging

resin	16 l in a 20 l can
cure	4 l in a 5 l can

Shipping weight

resin	approx. 21 kg
cure	approx. 5 kg

Shelf life 1 year from shipment date when stored indoors in unopened, original containers at 5 to 40°C (41 – 104°F)

Safety
Since improper use and handling can be hazardous to health and cause of fire or explosion, safety precautions included with Product Data/Application instruction and Material Safety Data Sheet must be observed during all storage, handling, use and drying periods.

Warranty
PPG warrants its products to be free from defects in material and workmanship. PPG's sole obligations and Buyer's exclusive remedy in connection with the products shall be limited, at PPG's option, to either replacement of products not conforming this warranty or credit to Buyer's account in the invoiced amount of the non-conforming products. Any claim under this warranty must be made by Buyer to PPG in writing within five (5) days of Buyer's discovery of the claimed defect, but in no event later than the expiration of the applicable shelf life, or one year from the delivery date, whichever is earlier. Buyer's failure to notify PPG of such non-conformance as required herein shall bar Buyer from recovery under this warranty.

PPG makes no other warranties concerning the product. No other warranties, whether express, implied or statutory, such as warranties of merchantability or fitness particular purpose, shall apply. In no event shall PPG be liable for consequential or incidental damages.

Any recommendations or suggestion relating to the use of the products made by PPG, whether in its technical literature, or response to specific enquiry, or otherwise, is based on data believed to be reliable; however, the products and information are intended for use by Buyer's having requisite skill and know-how in the industry, and therefore it is Buyer to satisfy itself of the suitability of the products for its own particular use and it shall be deemed that Buyer has done so, as its sole discretion and risk. Variation in environment, changes in procedures of use, or extrapolation of data may cause unsatisfactory results.

Limitation of Liability
PPG's liability on any claim of any kind, including claims based upon PPG's negligence or strict liability, for any loss or damage arising out of, connected with, or resulting from the use of the products, shall in no case exceed the purchase price allocable to the products or part thereof which give rise to the claim. In no event shall PPG be liable for consequential or incidental damages.

Due to PPG's policy of continuous product improvement, the information contained in this Product Data/Application Instructions sheet is subject to change without notice. It is the Buyer's responsibility to check that this issue is current prior to using the product. For the most up-to-date Product Data/Application Instructions always refer to the PPG Protective & Marine Coatings website at www.ppgpmc.com

To avoid any confusion that may arise through translation into other languages, the English version of the Product Data/Application Instructions will be the governing literature and must be referred to in case of deviations with product literature in other languages.

Condition of Sale
All our transactions are subject to our Terms and Conditions of Sale.

PPG Amercoat®

Amercoat®214

MARINE ANTIFOULING PAINT

FOR USE IN COMMERCIAL SHIPYARDS ONLY

EPA Reg. No. 7313-18
EPA Est. No. 7313-AR-1

Active Ingredient:
Cuprous Oxide 47.99%
Other Ingredients 52.01%
Total 100.00%
Copper as metallic: 42.3%
Contains Petroleum Distillates

KEEP OUT OF REACH OF CHILDREN
WARNING

See other precautions on side panel and MSDS.

AT214-91/05 Black 5 US Gallons / 18.93 L

PRECAUTIONARY STATEMENTS
HAZARDS TO HUMANS AND DOMESTIC ANIMALS:
WARNING – Causes severe eye irritation. May cause moderate skin irritation. May be harmful if absorbed through the skin. Prolonged or repeated contact may cause an allergic skin reaction. Vapor irritates eyes, nose, and throat. Vapor and/or spray mist may be harmful if inhaled. May cause irritation and/or allergic respiratory reaction in lungs. Harmful or fatal if swallowed.

FIRST AID	
Have the product container or label with you when calling a poison control center or doctor, or going for treatment.	
If in eyes:	Hold eye open and rinse slowly and gently with water for 15-20 minutes. Remove contact lenses, if present, after the first 5 minutes, then continue rinsing eye. Call a poison control center or doctor for treatment advice.
If on skin or clothing:	Take off contaminated clothing. Rinse skin immediately with plenty of water for 15-20 minutes. Call a poison control center or doctor for treatment advice.
If swallowed:	Call poison control center or doctor immediately for treatment advice. Have person sip a glass of water if able to swallow. Do not induce vomiting unless told to do so by a poison control center or doctor. Do not give anything by mouth to an unconscious person.
If inhaled:	Move person to fresh air. If person is not breathing, call 911 or an ambulance, then give artificial respiration, preferably by mouth to mouth, if possible. Call a poison control center or doctor for treatment advice.
For emergency medical information, call 1-412-434-4515.	

Hygienic practices – Wash thoroughly after use and before eating, smoking or using washroom. Keep away from feed or food products. Launder contaminated clothing before use.
ENVIRONMENTAL HAZARDS: This product is toxic to fish. Do not apply directly to water by cleaning, equipment or disposal of wastes or allow chips and dust generated during paint removal to enter water.
PHYSICAL OR CHEMICAL HAZARDS: Flammable. Keep away from heat, sparks, arc and open flame. Avoid breathing vapor, dust, spray mist or contact with eyes and skin. Use only with adequate ventilation and wear protective equipment, such as goggles, face protection, gloves, full protective clothing and properly fitted, positive-pressure, air-supplied respirator, during mixing, spraying and drying, until all vapors and mists are gone. There are reports that associate repeated and prolonged occupational overexposure to solvents with permanent brain and nervous system damage. In confined poorly ventilated areas, use airline, hood-type respirator and explosion- and spark-proof equipment. Welding and cutting can produce hazardous fumes and gases. For fires, blanket flames with foam, carbon dioxide, dry chemical. For spills, eliminate all sources of ignition or sparks. Use absorbent cleanup materials; place in separate, closed, metal container and dispose of in accordance with all applicable regulations. Wear NIOSH certified, self-contained air-supplied respirators to prevent overexposure to vapors.

STORAGE AND DISPOSAL
Keep container closed when not in use. Store in cool, dry, well-ventilated area. Do not contaminate water, food or feed by storage or disposal. Pesticide Disposal: Pesticide wastes are toxic. Improper disposal of this product or its rinsate is a violation of Federal Law. If this product cannot be disposed of by use according to label instructions, contact your State Pesticide or Environmental Control Agency, or Regional EPA Office. Hazardous Waste. Container Disposal: Triple rinse (or equivalent). Then offer for recycling or reconditioning, or puncture and dispose of in a sanitary landfill, or by other procedures approved by state and local authorities.

Manufactured by
PPG Industries, Inc., PPG Architectural Finishes, Inc., One PPG Place, Pittsburgh, PA 15272
Emergency Telephone Number 1-412-434-4515
Manufactured in the U.S.A.

LIMITED WARRANTY
PPG warrants your satisfaction with the performance properties of this product if it is properly applied to a properly prepared surface in accordance with label directions. PPG MAKES NO OTHER EXPRESS WARRANTIES. IN THE EVENT THE PRODUCT FAILS TO CONFORM TO THIS WARRANTY, PPG, AS ITS SOLE LIABILITY, AND IN LIEU OF ANY DIRECT OR INDIRECT, INCIDENTAL, SPECIAL OR CONSEQUENTIAL DAMAGES, WILL, AT YOUR OPTION, FURNISH REPLACEMENT PRODUCT OR REFUND THE PURCHASE PRICE – LABOR OR COSTS OF LABOR FOR THE APPLICATION OF ANY PRODUCT SPECIFICALLY ARE EXCLUDED. You must supply proof of purchase. This warranty gives you specific legal rights, and you may also have other rights which vary from state to state. Some states do not allow the exclusion or limitation of incidental or consequential damages, so the above limitation or exclusion may not apply to you. To make a claim under this warranty, contact the store where you purchased the product or: PPG Industries Inc., One PPG Place, Pittsburgh, PA 15272.

DIRECTIONS FOR USE: It is violation of Federal Law to use this product in a manner inconsistent with its labeling.

Surface Preparation – Dependent upon the condition of the hull and existing antifouling coatings, surface preparation will vary from low pressure water cleaning (1500-3000 psi) to abrasive blasting. Apply over a suitable primer system or clean, intact, existing antifouling coating. Substrates that are abrasive blasted should be prepared in accordance with the instructions for the anticorrosive coating to be used.

Application Equipment – Can be applied by brush, roller, airless spray, or conventional air spray equipment.

Application Instructions –

1. When applying antifouling coatings over epoxy anticorrosive coatings, apply the first coat of antifouling while the epoxy anticorrosive is tack free, but still soft to thumb pressure. If the epoxy is too hard, apply another thin coat of epoxy and then apply the antifouling after the epoxy is tack free but still soft to thumb pressure. Failure to apply the antifouling coating while the epoxy is thumbprint soft may result in poor adhesion of the antifouling coating and eventual delamination.
2. Clean all application equipment with T-10 thinner.
3. Stir material thoroughly and continue stirring occasionally during application to ensure pigment suspension.
4. Thin only for workability – no more than 1 pint thinner per gallon of material.
5. Apply a wet coat in even brush or roller strokes or spray passes, building the wet film thickness to achieve the recommended dry film thickness. Allow 4 hours dry time at 77°F (20°C) between coats. Allow 5 hours dry time at 77°F (20°C) before launching.
6. Clean application equipment immediately after use with thinner.

Photochemically Reactive per SCAQMD Rule 102
Shelf life: 1 year from date of shipment
DOT: Paint, UN1263
VOC: 400 g/L (3.33 lbs/gal)
Thinned: T-10 (1 pt/gal)
440 g/L (3.66 lbs/gal)
Do not thin inconsistent with local VOC regulations.
NOTE: This product contains a chemical(s) known to the state of California to cause cancer.

ESL0307D8 REV081508 (12003) 4730A05 4730A05

AMERCOAT® 450H

November 2013
Revision of October 2013

DESCRIPTION

Gloss Acrylic Aliphatic Polyurethane Topcoat

PRINCIPAL CHARACTERISTICS

- High gloss topcoat with unlimited recoatability
- Outstanding weather resistance with excellent color and gloss retention
- VOC compliant
- Hard, flexible, and abrasion resistant
- Cures through a wide temperature range

COLOR AND GLOSS

Gloss
Standard Color Offering, Safety Colors, Custom Colors

BASIC DATA

Volume solids	67% ± 3%
VOC	2.6 lbs/gal (311 g/L)
Recommended Dry film thickness (per coat)	2 – 3 mils* (50 – 75 microns) ** Product is acceptable at higher film builds and may be applied up to 5 mils dry film thickness using multiple wet passes. A flash off time may be required in some circumstances.*
Theoretical Spread Rate	@ 1 mils dft 1074 ft²/gal @ 2 mils dft 537 ft²/gal ** Film build of 4-5 mils may require two wet coats.*
Components	2
Dry Temperature Resistance*	Continuous — 200°F Intermittent — 250°F (<5% of the time, max 24 hours) ** Color will drift at elevated temperatures*
Shelf Life	2 years from date of manufacture ** when stored in original sealed containers in dry conditions between 40-100°F*

SURFACE PREPARATION

Coating performance is proportional to the degree of surface preparation. Refer to the application instructions for specific primers and intermediate coats for application and curing procedures. Ensure epoxies are free from amine blush prior to overcoating. All previous coats must dry and free of contaminants. Adhere to all minimum and maximum topcoat times for specific primers and intermediate coats. Aged epoxy coatings may require abrading prior to applying *Amercoat* 450H.

ENVIRONMENTAL CONDITIONS

Ambient temperatures	20°F to 120°F (-6°C to 49°C) Surface temperature must be at least 5°F above dew point temperature.
Material temperatures	40°F to 90°F (5°C to 32°C)
Relative humidity	85% maximum
Surface temperature	20°F to 120°F (-6°C to 49°C)
General air quality	Area should be sheltered from airborne particulates and pollutents. Ensure good ventilation during application and curing. Provide shelter to prevent wind from affecting spray patterns.

INSTRUCTIONS FOR USE

Mixing ratio by volume

4 parts base to 1 part hardener

Pre-mix base component with a pneumatic air mixer at moderate speeds to homogenize the container. Add hardener to base and agitate with a power mixer for 1-2 minutes until completely dispersed.

Pot life

50°F	70°F	90°F
6 hours	4 hours	2 hours

AMERCOAT 450H

Airless spray	28:1 pump or larger, 0.013-0.015 fluid tip Can be applied with plural component equipment
Air spray	Thin up to 20%, standard conventional equipment, 0.070" fluid orifice. A moisture and oil trap in the main line is essential. Product is sensitive to moisture contamination.
Brush & roll	Use a high quality natural bristle brush and / or solvent resistant, 1/4" or 3/8" nap roller. Ensure brush / roller is well loaded to avoid air entrainment. Multiple coats may be necessary to achieve adequate film build. *Amercoat* 851 flow control additive can be used to for enhanced flow and leveling with brush and roll application.
Thinner	*Amercoat* 923, *Amercoat* 65, *Amercoat* 101 (recommended for > 90°F)
Cleaning solvent	*Amercoat* 12 Cleaner or thinner
Primers	*Amercoat* 235, *Amercoat* 240, *Amercoat* 68HS, *Amercoat* 68MCZ, *Amercoat* 370, *Amercoat* 385, *Amercoat* 399, *Amerlock* 2/400, *Pittguard* Epoxies
Safety precautions	For paint and recommended thinners see safety sheet 1430, 1431 and relevant material safety data sheets This is a solvent borne paint and care should be taken to avoid inhalation of spray mist or vapor as well as contact between the wet paint and exposed skin or eyes.

DRY/CURE TIMES

Amercoat 450H @ 2 mils dft

	32°F	50°F	70°F	90°F
Dry to touch	4 hours	90 minutes	45 minutes	20 minutes
Dry through	72 hours	24 hours	8 hours	4 hours
Dry to recoat	24 hours	12 hours	4 hours	2 hours
Maximum recoat	Unlimited			

Amercoat 450H with 866M Accelerator @ 2 mils dft

	20°F	32°F	50°F	70°F	90°F
Dry to touch	8 hours	4 hours	75 minutes	25 minutes	10 minutes
Dry through	72 hours	36 hours	8 hours	2.5 hours	1.75 hours
Dry to recoat	32 hours	16 hours	4 hours	1.5 hours	1 hour
Maximum recoat	Unlimited				

PRODUCT QUALIFICATIONS

- Compliant with USDA incidental Food Contact Requirements
- SSPC Paint 36 Level 3

AVAILABILITY

Packaging

Available in 1-gallon and 5-gallon kits
1-gallon kits have 0.8 gallons of base and 0.2 gallons of hardener
5- gallon kits have 4 gallons of base and 1 gallon of hardener

Product codes

AT 45H-23	Pearl Gray base
AT 45H-3	White base
AT 45H-9	Black base
AT 45H-T1	Deep tint base *
AT 45H-T2	Light tint base *
AT 45H-T3	Neutral tint base *
AT 45H-T4	Red tint base *
AT 45H-T5	High Hiding Yellow tint base *
AT 45H-71	Safety Red base
AT 45H-81	Safety Yellow base
AT 45H-B	Hardener component

** Tintable using UCD V-Line colorants only.*

Worldwide statement	While it is always the aim of PPG Protective & Marine Coatings to supply the same product on a worldwide basis, slight modification of the product is sometimes necessary to comply with local or national rules/circumstances. Under these circumstances an alternative product data sheet is used.

WARRANTY STATEMENT

PPG warrants (i) its title to the product, (ii) that the quality of the product conforms to PPG's specifications for such product in effect at the time of manufacture and (iii) that the product shall be delivered free of the rightful claim of any third person for infringement of any U.S. patent covering the product.

THESE ARE THE ONLY WARRANTIES THAT PPG MAKES AND ALL OTHER EXPRESS OR IMPLIED WARRANTIES, UNDER STATUTE OR ARISING OTHERWISE IN LAW, FROM A COURSE OF DEALING OR USAGE OF TRADE, INCLUDING WITHOUT LIMITATION, ANY OTHER WARRANTY OF FITNESS FOR A PARTICULAR PURPOSE OR USE, ARE DISCLAIMED BY PPG.

Any claim under this warranty must be made by Buyer to PPG in writing within five (5) days of Buyer's discovery of the claimed defect, but in no event later than the expiration of the applicable shelf life of the product, or one year from the date of the delivery of the product to the Buyer, whichever is earlier. Buyer's failure to notify PPG of such non-conformance as required herein shall bar Buyer from recovery under this warranty.

LIMITATION OF LIABILITY

IN NO EVENT WILL PPG BE LIABLE UNDER ANY THEORY OF RECOVERY (WHETHER BASED ON NEGLIGENCE OF ANY KIND, STRICT LIABILITY OR TORT) FOR ANY INDIRECT, SPECIAL, INCIDENTAL, OR CONSEQUENTIAL DAMAGES IN ANY WAY RELATED TO, ARISING FROM, OR RESULTING FROM ANY USE MADE OF THE PRODUCT.

The information in this sheet is intended for guidance only and is based upon laboratory tests that PPG believes to be reliable. PPG may modify the information contained herein at any time as a result of practical experience and continuous product development. All recommendations or suggestions relating to the use of the PPG product, whether in technical documentation, or in response to a specific inquiry, or otherwise, are based on data, which to the best of PPG's knowledge, is reliable. The product and related information is designed for users having the requisite knowledge and industrial skills in the industry and it is the end-user's responsibility to determine the suitability of the product for its own particular use and it shall be deemed that Buyer has done so, as its sole discretion and risk.

PPG has no control over either the quality or condition of the substrate, or the many factors affecting the use and application of the product. Therefore, PPG does not accept any liability arising from any loss, injury or damage resulting from such use or the contents of this information (unless there are written agreements stating otherwise). Variations in the application environment, changes in procedures of use, or extrapolation of data may cause unsatisfactory results.

This sheet supersedes all previous versions and it is the Buyer's responsibility to ensure that this information is current prior to using the product.

Current sheets for all PPG Protective & Marine Coatings Products are maintained at www.ppgpmc.com. The English text of this sheet shall prevail over any translation thereof.

Amercoat is a registered trademark of PPG Industries Ohio, Inc.

DIMETCOTE® 302H

January 2014
Revision of May 2013

DESCRIPTION

Reinforced Inorganic Zinc Primer

PRINCIPAL CHARACTERISTICS

- Provides outstanding corrosion resistance
- Fast dry times for rapid topcoating
- Low VOC
- Excellent corrosion resistance from unique formulation

COLOR AND GLOSS

Flat
Green

BASIC DATA

Volume solids	78% ± 3%
VOC	2.37 lbs/gal (284 g/L)
Recommended Dry film thickness (per coat)	2 – 4 mils (50 – 100 microns)
Theoretical Spread Rate	@ 1 mils dft 1251 ft²/gal @ 3 mils dft 417 ft²/gal
Components	2
Dry Temperature Resistance	Continuous — 400°F *Color will drift at elevated temperatures.*
Shelf Life	1 year from date of manufacture

SURFACE PREPARATION

Coating performance is proportional to the degree of surface preparation. All previous coats must dry and free of contaminants.

Steel

- Abrasive blast to SSPC SP-6 or higher with a 1.0-3.0 mil surface profile. Higher surface profiles up to 5 mils are acceptable, but the product must be applied in a thickness great enough to achieve a minimum of 2.5 mils dry film thickness.

  Apply *Dimetcote* 302H as soon as possible to prevent the blasted surface from rusting. Keep moisture, oil, grease, or other organic matter off surface before coating.

  For touch up and repair, power tool cleaning in accordance with SSPC SP-11 is acceptable.

ENVIRONMENTAL CONDITIONS

Ambient temperatures	20°F to 120°F (-6°C to 49°C) Surface temperature must be at least 5°F above the dew point temperature.
Material temperatures	40°F to 90°F (5°C to 32°C)
Relative humidity	85% maximum
Surface temperature	20°F to 130°F (-6°C to 54°C) Surface temperature must be at least 5°F above the dew point temperature.
General air quality	Area should be sheltered from airborne particulates and pollutants. Ensure good ventilation during application and curing. Provide shelter to prevent wind from affecting spray patterns.

INSTRUCTIONS FOR USE

Mixing

Only mix full kits.
9 parts base : 1 part hardener by volume
Pre-mix base component with a pneumatic air mixer at moderate speeds to homogenize the container. Add hardener to base and agitate with a power mixer for 1-2 minutes until completely dispersed. Strain the mixture from one container to another through a 30 mesh filter/strainer to remove any undispersed lumps.

Pot life

Temperature	50°F	70°F	90°F
Dimetcote 302H	16 hours	8 hours	4 hours

DIMETCOTE 302H

Airless spray	45:1 pump or larger, 0.017 - 0.019 fluid tip
Air spray	Thin up to 10%, standard conventional equipment, 0.070" fluid orifice . A moisture and oil trap in the mein line is recommended. Separate regulators for air and fluid pressure are recommended.
Brush & roll	Use a high quality natural bristle. Brush application is only recommended for small touch up and/or repair areas. Roller application is not recommended. Ensure brush is well loaded to avoid air entrainment. Multiple coats mey be necessary to achieve adequate film build.
Thinner	*Amercoat* T-10, *Amercoat* 101 (recommended for > 90°F)
Cleaning solvent	*Amercoat* 12 Cleaner or *Amercoat* 65 thinner (xylene)
Primers	Direct to metel, can be used to touch up inorganic zincs such as *Dimetcote* 9-series.
Topcoats	*Amershield, PSX* 700, *Amerlock* 2/400, *Amercoat* 385, *Amercoat* 370, *Amercoat* 240, *Amercoat* 235, others
Safety precautions	For paint and recommended thinners see safety sheet 1430, 1431 and relevant material safety data sheets This is a solvent borne paint and care should be takan to avoid inhalation of spray mist or vapor as well as contact between the wet paint and exposed skin or eyes.

DRY/CURE TIMES

Dimetcote 302H @ 3 mils dft

	40°F	50°F	70°F	90°F
Dry hard	36 hours	18 hours	6 hours	3 hours
Dry overcoat	8 hours	4 hours	1.5 hours	0.75 hour
Maximum ovarcoat*	3 months			

* *Surface must be power washed as needed to remove all surface contaminants including zinc salts. Surface must be clean and dry.*

PRODUCT QUALIFICATIONS

- Zinc Dust meets ASTM D520 Type 2 standards

AVAILABILITY

Packaging	Available in 1-gallon and 5-gallon kits
Product codes	DI302H-5A Base DI302H-B Hardener (Part B)
Worldwide statement	While it is always the aim of PPG Protective & Marine Coatings to supply the same product on a worldwide basis, slight modification of the product is sometimes necessary to comply with local or national rules/circumstances. Under these circumstances an alternative product data sheet is used.

WARRANTY STATEMENT

PPG warrants (i) its title to the product, (ii) that the quality of the product conforms to PPG's specifications for such product in effect at the time of manufacture and (iii) that the product shall be delivered free of the rightful claim of any third person for infringement of any U.S. patent covering the product.

THESE ARE THE ONLY WARRANTIES THAT PPG MAKES AND ALL OTHER EXPRESS OR IMPLIED WARRANTIES, UNDER STATUTE OR ARISING OTHERWISE IN LAW, FROM A COURSE OF DEALING OR USAGE OF TRADE, INCLUDING WITHOUT LIMITATION, ANY OTHER WARRANTY OF FITNESS FOR A PARTICULAR PURPOSE OR USE, ARE DISCLAIMED BY PPG.

Any claim under this warranty must be made by Buyer to PPG in writing within five (5) days of Buyer's discovery of the claimed defect, but in no event later than the expiration of the applicable shelf life of the product, or one year from the date of the delivery of the product to the Buyer, whichever is earlier. Buyer's failure to notify PPG of such non-conformance as required herein shall bar Buyer from recovery under this warranty.

LIMITATION OF LIABILITY

IN NO EVENT WILL PPG BE LIABLE UNDER ANY THEORY OF RECOVERY (WHETHER BASED ON NEGLIGENCE OF ANY KIND, STRICT LIABILITY OR TORT) FOR ANY INDIRECT, SPECIAL, INCIDENTAL, OR CONSEQUENTIAL DAMAGES IN ANY WAY RELATED TO, ARISING FROM, OR RESULTING FROM ANY USE MADE OF THE PRODUCT.

The information in this sheet is intended for guidance only and is based upon laboratory tests that PPG believes to be reliable. PPG may modify the information contained herein at any time as a result of practical experience and continuous product development. All recommendations or suggestions relating to the use of the PPG product, whether in technical documentation, or in response to a specific inquiry, or otherwise, are based on data, which to the best of PPG's knowledge, is reliable. The product and related information is designed for users having the requisite knowledge and industrial skills in the industry and it is the end-user's responsibility to determine the suitability of the product for its own particular use and it shall be deemed that Buyer has done so, as its sole discretion and risk.

PPG has no control over either the quality or condition of the substrate, or the many factors affecting the use and application of the product. Therefore, PPG does not accept any liability arising from any loss, injury or damage resulting from such use or the contents of this information (unless there are written agreements stating otherwise). Variations in the application environment, changes in procedures of use, or extrapolation of data may cause unsatisfactory results.

This sheet supersedes all previous versions and it is the Buyer's responsibility to ensure that this information is current prior to using the product.

Current sheets for all PPG Protective & Marine Coatings Products are maintained at www.ppgpmc.com. The English text of this sheet shall prevail over any translation thereof.

Amercoat and Dimetcote are registered trademarks of PPG Industries Ohio, Inc.

AMERCOAT® 237M

Saptamber 2013
Revision of October 2012

DESCRIPTION	Heavy Duty Non-skid Epoxy Coeting
PRINCIPAL CHARACTERISTICS	– Tough, abrasion resistant epoxy coating containing hard non-skid grit – Non-skid grit pre-dispersed in epoxy component – Easy sprey or roll on application – Suitable for off shore decks, helicopter pads, vehicular decks. truck ramps, and walkways
COLOR AND GLOSS*	Dark Gray, Haza Gray, Oxide Rad Semi-gloss * *Epoxy coatings will characteristically chalk and fade upon exposure to sunlight. Light colors are prone to ambering to some extent*
BASIC DATA	
Volume solids	76% ± 3%
VOC	1.3 lbs/gal (156 g/L)
Recommended Dry film thickness (per coat)	Apply at approximately 80 ft² / gallon
Components	2
Shelf Life	3 years from date of manufacture
SURFACE PREPARATION	Coating performanca is, in ganeral, proportional to the degree of surface preparation.
Steal	– SSPC SP-6, SP-10, SP-11, or SP-12 WJ-2(L), than prima with suitable primer. See spacific primer for further details.
Concrete	– Remove all surface contaminants such as oil, grease, and embedded chemicals. Abrade tha surface per ASTM D 4259 to remove all chalk and surface glaze or laitance. Mechanical surface preparation should expose sub-surface voids and provide a surface profile equivalent to 60 grit sandpaper or coerser. Surfece should be free from moisture in accordance with ASTM D4263. Refer to Information Shaet # 1496 ACUS for further details regarding moisture measurements. Slabs on grade should hava a maximum moisture content of 3 lbs/1,000 ft²/24 hours when measured by calcium chloride test. Prime with *Amerlock* Sealer or *Amerlock* 2/400.
Non-ferrous metals	– Lightly abrasive blast in accordance with SSPC SP-16 to achieva a uniform and densa 1.5-4.0 mil anchor profile. Usa suitable epoxy primer.
ENVIRONMENTAL CONDITIDNS	
Ambient temparaturas	40°F to 120°F (5°C to 49°C) Surfaca temperature must be at least 5°F above the daw point temperature.
Matarial temparatures	40°F to 90°F (5°C to 32°C)
Relative humidity	85% maximum
Surface temperature	40°F to 120°F (5°C to 49°C)
General air quality	Area should be sheltered from airborne particulates and pollutants. Avoid combustion gases or other sources of carbon dioxide that may promote amine blush. Ensure good ventilation during application and curing. Provide shelter to prevent wind from affecting spray patterns.
INSTRUCTIONS FOR USE	
Mixing ratio by volume	4 parts base to 1 part hardener Pre-mix pigmented components with a pneumatic air mixing at moderate speeds to homogenize the container. Add hardener to base and agitate with a power mixer for 1-2 minutes until completely dispersed.

AMERCOAT 237M

Pot life

50°F	70°F	90°F
6 hours	4 hours	2 hours

Induction time

15 minutes at 75°F or lower

Airless spray

Not recommended

Air spray

Use an agitated, bottom fluid outlet spray pot equipped 3/4" fluid outlet connection such as a Binks 5-gallon Model 83-5462 with a 3/4" fluid hose. A Binks Model 7E-2 hand gun or 125 pole gun, with 45 or 46 tip sizes and 190-191 hardened nozzles is suitable. The maximum length of the fluid hose should be 15 feet. Flush out all equipment with T-10 thinner and ensure it is in good working order.

Apply about 25 psi fluid pressure to the spray pot and start the agitator at low speed. The air pressure should be turned on, ensuring it is adjusted to 5 psi higher than the pot pressure. Next, hold the gun nozzle over the empty 5 gallon pail. Open the valve on the gun, then open the bottom outlet valve on the spray pot. This sequence is important to prevent clogging of the fluid line. If the fluid line becomes clogged, relieve the fluid pressure and open the vent valve on the spray pot. Blow the paint in the fluid line back into the pot by covering the spray gun head with a rag. This should clear the fluid hose. After closing the spray pot outlet valve, proceed again as indicated above. After the proper spray pattern is obtained by adjustments in the fluid and air pressures, begin applying the non-skid coating. Spray the coating in overlapping passes to hide the primer. Optimum spray techniques should result in a spreading rate of about 80 ft^2/gallon.

Roller

Use a short nap roller with a long handle and roll evenly. Mixed material can be poured in a ribbon and rolled in one direction.

Thinner

Thin up to 5% with *Amercoat* T-10 thinner

Cleaning solvent

Amercoat 12 Cleaner or *Amercoat* T-10

Primers

Amercoat 137, *Amercoat* 235, *Amercoat* 240, *Amerlock* 2/400, *Dimetcote* 302H, *Amerlock* Sealer, *Amercoat* 385PA

Topcoats

Amercoat 450-Series Polyurethanes, Amershield, *PSX* 700, *Amercoat* 229T, *PSX* One

Safety precautions

For paint and recommended thinners see safety sheet 1430, 1431 and relevant material safety data sheets

This is a solvent borne paint and care should be taken to avoid inhalation of spray mist or vapor as well as contact between the wet paint and exposed skin or eyes.

DRY/CURE TIMES

Amercoat 237M @ 80 ft^2/ gal

	50°F	70°F	90°F
Dry through	48 hours	24 hours	14 hours
Dry to topcoat	48 hours	24 hours	14 hours
Max topcoat	14 days	7 days	4 days

* *Dry times are dependent on air and surface temperatures as well as film thickness, ventilation, and relative humidity. Maximum recoating time is highly dependent upon actual surface temperatures – not simply air temperatures. Surface temperatures should be monitored, especially with sun-exposed or otherwise heated surfaces. Higher surface temperatures shorten the maximum recoat window.*

Surface must be clean and dry. Any contamination must be identified and removed. Particular attention must be paid to surfaces exposed to sunlight where chalking may be present. In those situations, a further degree of cleaning may be required. PPG Technical Service can advise on suitable cleaning methods. If maximum recoat/topcoat time is exceeded, then roughen surface.

AMERCOAT 237M

AVAILABILITY

Packaging	Available in 5-gallon kits 5- gallon kits have 4 gallons of base and 1 gallon of hardener	
Product codes	AT237-23	Pearl Gray base component
	AT237-28	Dark Gray base component
	AT237-72	Oxide Red base component
	AT 237-B	Hardener Component

WARRANTY STATEMENT

PPG warrants (i) its title to the product, (ii) that the quality of the product conforms to PPG's specifications for such product in effect at the time of manufacture and (iii) that the product shall be delivered free of the rightful claim of any third person for infringement of any U.S. patent covering the product.

THESE ARE THE ONLY WARRANTIES THAT PPG MAKES AND ALL OTHER EXPRESS OR IMPLIED WARRANTIES, UNDER STATUTE OR ARISING OTHERWISE IN LAW, FROM A COURSE OF DEALING OR USAGE OF TRADE, INCLUDING WITHOUT LIMITATION, ANY OTHER WARRANTY OF FITNESS FOR A PARTICULAR PURPOSE OR USE, ARE DISCLAIMED BY PPG.

Any claim under this warranty must be made by Buyer to PPG in writing within five (5) days of Buyer's discovery of the claimed defect, but in no event later than the expiration of the applicable shelf life of the product, or one year from the date of the delivery of the product to the Buyer, whichever is earlier. Buyer's failure to notify PPG of such non-conformance as required herein shall bar Buyer from recovery under this warranty.

LIMITATION OF LIABILITY

IN NO EVENT WILL PPG BE LIABLE UNDER ANY THEORY OF RECOVERY (WHETHER BASED ON NEGLIGENCE OF ANY KIND, STRICT LIABILITY OR TORT) FOR ANY INDIRECT, SPECIAL, INCIDENTAL, OR CONSEQUENTIAL DAMAGES IN ANY WAY RELATED TO, ARISING FROM, OR RESULTING FROM ANY USE MADE OF THE PRODUCT.

The information in this sheet is intended for guidance only and is based upon laboratory tests that PPG believes to be reliable. PPG may modify the information contained herein at any time as a result of practical experience and continuous product development. All recommendations or suggestions relating to the use of the PPG product, whether in technical documentation, or in response to a specific inquiry, or otherwise, are based on data, which to the best of PPG's knowledge, is reliable. The product and related information is designed for users having the requisite knowledge and industrial skills in the industry and it is the end-user's responsibility to determine the suitability of the product for its own particular use and it shall be deemed that Buyer has done so, as its sole discretion and risk.

PPG has no control over either the quality or condition of the substrate, or the many factors affecting the use and application of the product. Therefore, PPG does not accept any liability arising from any loss, injury or damage resulting from such use or the contents of this information (unless there are written agreements stating otherwise). Variations in the application environment, changes in procedures of use, or extrapolation of data may cause unsatisfactory results.

This sheet supersedes all previous versions and it is the Buyer's responsibility to ensure that this information is current prior to using the product.

Current sheets for all PPG Protective & Marine Coatings Products are maintained at www.ppgpmc.com. The English text of this sheet shall prevail over any translation thereof.

Amercoat is a registered trademark of PPG Industries Ohio, Inc.

EXHIBIT D. CATHODIC PROTECTION REFERENCE DOCUMENTS

Document Title
Galvotec Specification Sheets
Zinc Anodes - Mil-Spec MIL-18001
Zinc Hull Anodes by Galvotec Alloys

Other Acceptable Anode Manufacturers:

Document Title
Farwest Corrosion Specification Sheets
Zinc Hull Anodes # M-24 by Farwest Corrosion Control Company

Document Title
GaUS Specification Sheets
Zinc Hull Anodes # TH_22.5_2S by GaUS Anodes

Zinc Anodes
Mil-Spec MIL-18001

Composition:

ASTM-B-418 TYPE I MIL-A-18001-K		ASTM-B-418 TYPE II	
Fe	0.005% Max.	Fe	0.0014% Max.
Pb	0.006% Max.	Pb	0.003% Max.
Cu	0.005% Max.	Cu	0.002% Max.
Al	0.1 - 0.5%	Al	0.005% Max.
Cd	0.025 - 0.07%	Cd	0.003% Max.
Zn	Remainder	Zn	Remainder

Galvotec's Mil-Spec zinc anode meet the latest Mil-Spec revision. This alloy is also covered by ASTM-418-95 Type I. Galvotec's Mil-Spec zinc anodes are effective, economical corrosion fighters in applications where temperature exposures are limited up to 120 degrees F. (50° C) Galvotec's Mil-Spec zinc typical uses in seawater or saline mud:

- Hulls of ships, barges, boats and tugs
- Ballast tanks of tankers, ore carriers and freighters
- Bulkheads
- Piers and Pilings
- Pipelines
- Heat Exchangers

Galvotec Alloys, Inc. is an approved manufacturer for the US Government in addition to all of the major shipyards.

Galvanic Efficiency:

Galvotec's Mil-Spec anodes operate at a nominal 95% efficiency in seawater.

Galvanic efficiency relates directly to the anode's service life. Some commercial anodes develop dense corrosion products with high electrical resistance on their surface that restrict the current flow. In some cases, the anode's productive life ends before all of the available anode is consumed.

Galvotec's Mil-Spec anodes, however, resist the formation of hard, dense corrosion products and continue producing protective current until they are completely consumed. This longer life means fewer replacements and reduced overall operating costs.

Zinc
Hull Anodes

ISO 9001 DNV DNV Certification, Inc. REGISTERED FIRM

GA-26

Contains single galvanized steel longitudinal strap. Can be bolted or welded to hull. Particularly suited for smaller ships, coastal vessels, harbor tugs, etc.

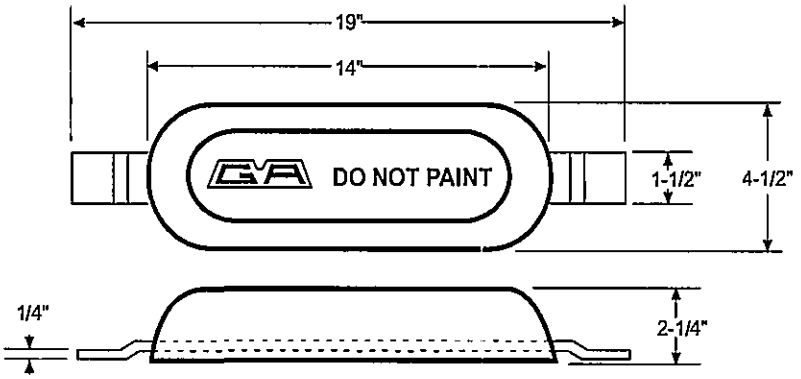

Weight	26 lbs	11.8 kg
Width	4 1/2"	114 mm
Height	2 1/4"	57 mm
Length	14"	356 mm
Current Rating	1 (amp-yrs)	

GA-48

Contains single longitudinal galvanized steel strap for welding to hull. Particularly suited for major ships, 10,000 DWT and upward.

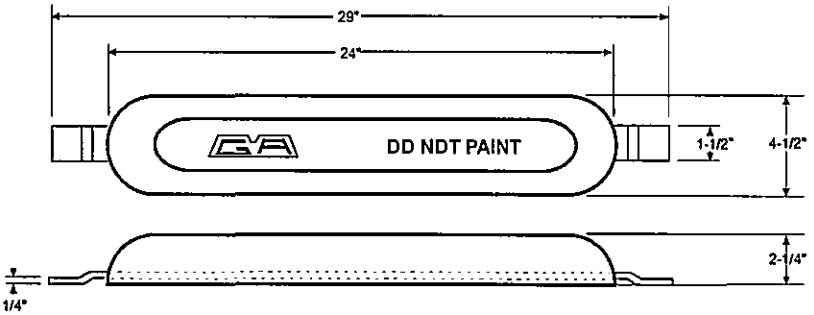

Weight	48 lbs	21.8 kg
Width	4 1/2"	114 mm
Height	2 1/4"	57 mm
Length	24"	61 mm
Current Rating	2 (amp-yrs)	

Tapered GA-23T

Contains two cast-in galvanized steel mounting straps.

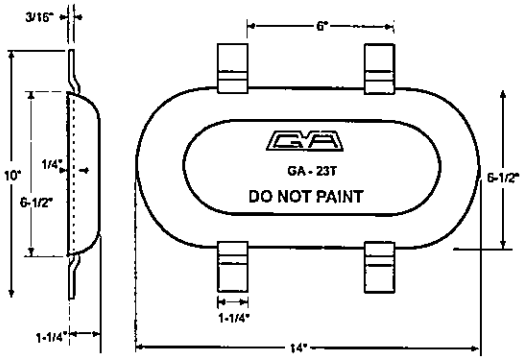

Weight	22.5 lbs	10.2 kg
Width	6 1/2"	165 mm
Height	1 1/4"	32 mm
Length	14"	356 mm
Current Rating	1 (amp-yrs)	

Zinc
Hull Anodes

Military Anodes

The anodes shown here conform to the latest modification of MIL-A-18001.

Anodes in this series contain two cast-in galvanized steel mounting straps (brass mounting straps are also available) or two cast-in cored holes on 6" centers. (GA-23C & GA-42C)

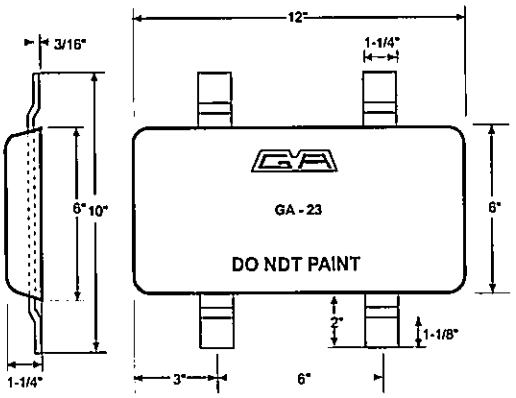

Product Number	Mil. Spec.	Wt. Lbs	Wt. Kg	W in	W mm	H in	H mm	L in	L mm	Current Rating (amp-yrs)
GA-23	ZHS-23	22	10	6	152	1 1/4	32	12	30	1
GA-23C	ZHC-23	22	10	6	152	1 1/4	32	12	30	1
GA-42	ZHS-47	42	19	6	152	2 1/2	64	12	30	1
GA-42C	ZHC-47	40	18	6	152	2 1/2	64	12	30	1

These anodes contain a single cast-in galvanized steel mounting strap measuring 3/16" x 1 1/4" x 16".
Option: Holes in straps

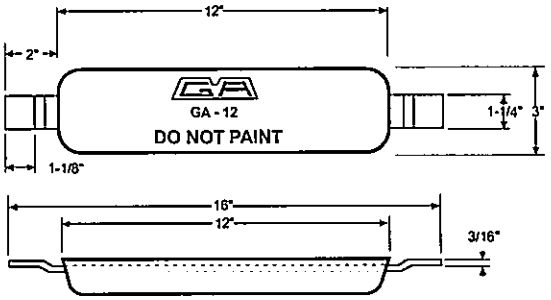

Product Number	Mil. Spec.	Wt. Lbs	Wt. Kg	W in	W mm	H in	H mm	L in	L mm	Current Rating (amp-yrs)
GA-12	ZSS-12	11	5	3	76	1 1/4	3	12	30	0.5
GA-24	ZSS-24	22	10	3	76	2 1/2	6	12	30	1.0

A teardrop-shaped anode containing a single, cast-in galvanized steel strap.

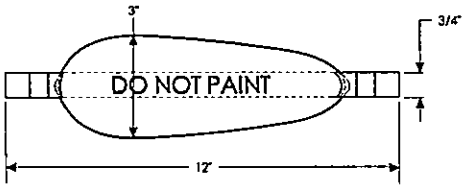

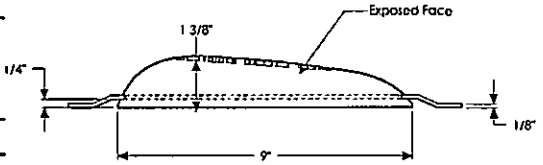

Product Number	Mil. Spec.	Wt. Lbs	Wt. Kg	W in	W mm	H in	H mm	L in	L mm	Current Rating (amp-yrs)
GA-TD6	ZTS	5	2.3	3	76	1 1/4	32	9	41	0.25

FARWEST CORROSION CONTROL COMPANY
Toll Free (888) 532-7937 US & Canada
(310) 532-9524 National HQ
A Certified Women Business Enterprise (WBE)

Certified WBENC Women's Business Enterprise

8 Warehouse/Office Locations Nationwide
Call Toll Free (888) 532-7937 (U.S and Canada only)
Call our National Headquarters (310) 532-9524

Supplier Clearing House Certificate of Eligibility

VERIFIED & SECURED

© Copyright 2015 Farwest Corrosion Control Company All Rights Reserved

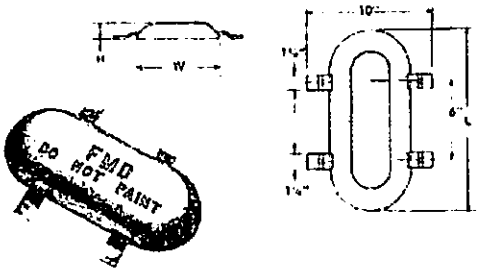

Tapered M-24 Hull Anode

Contains two cast-in galvanized steel mounting straps. Farwest can add a mounting hole to each mounting strap.

Anode	Lbs	W	H	L
M-24	22.5	6 1/2"	1 1/4"	14"

Military Anodes

The military anodes shown here conform to the latest modification of mil spec MIL-A-18001.

Anodes in this series contain two cast-in galvanized steel mounting straps (brass mounting straps are also available) or two cast-in cored holes on 6" centers.

Farwest can add a mounting hole to each mounting strap.

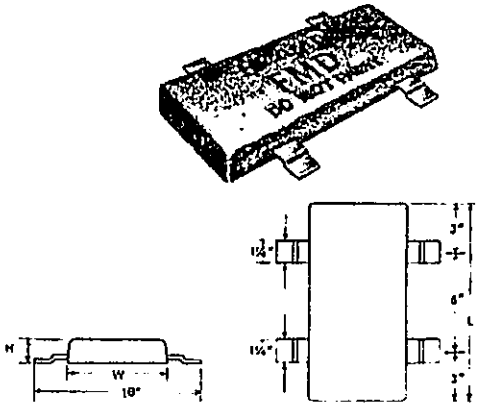

Anode	Lbs	W	L	H
ZHS-23	22	6"	12"	1 1/4"
ZHC-23	22	6"	12"	1 1/4"
ZHS-42	42	6"	12"	2 1/2"
ZHC-42	39	6"	12"	2 1/2"

The military anodes below contain a single cast-in galvanized steel mounting strap measuring 3/15" x 1 1/4" x 16". Farwest can add a mounting hole to each mounting strap.

GaUS Anodes International, LLC
Manufacturer of High Quality Anodes

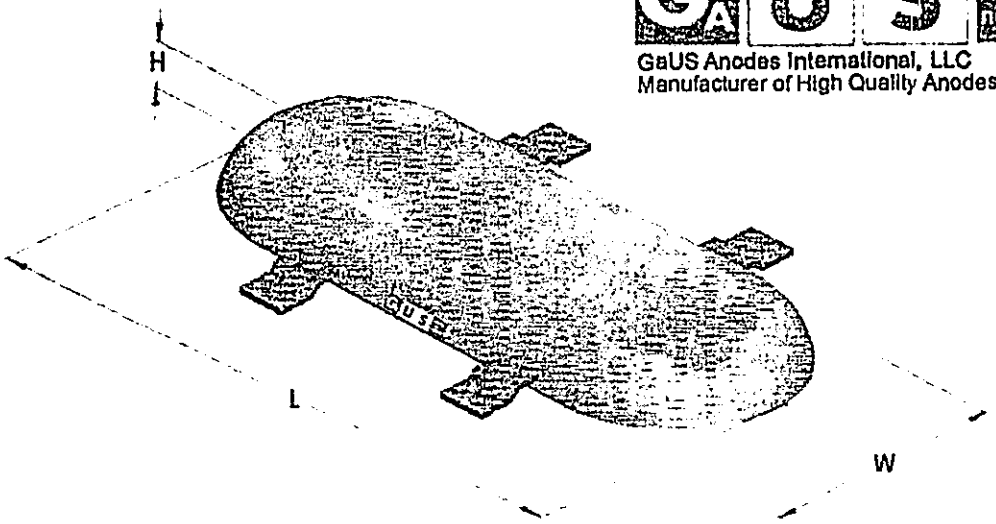

HULL TAPERED

NAME	L (In)	W (In)	H	NET WEIGHT(lbs)	GROSS WEIGHT(lbs)	CORE TYPE (In)
TH_22.5_2S	14	6½	1¼	22.5	23.5	1¼ X 3/16

Cunningham Business Park
6425 Cunningham Rd, Houston TX 77041
PHONE: 832-243 0700 FAX: 832- 243 0781
Website: www.gausanodes.com/ Email: anodes@gausanodes.com