THE PORT AUTHORITY OF NY & NJ

PROCUREMENT DEPARTMENT
4 WORLD TRADE CENTER
150 GREENWICH STREET, 21ST FL.
NEW YORK, NY 10007

3/29/2016

ADDENDUM # 1

To prospective Bidder(s) on Bid # 45543 for 18-Foot Fiberglass Cover Board for Contact Rail per PATH Specifications and Drawing – Due 4/6/2016, no later than 11:00 AM:

I. CHANGE/MODIFICATION

The following change/modification is hereby made to the solicitation documents:

Attached is Drawing T-144 revised with signature.

II. BIDDER'S QUESTIONS AND ANSWERS

The following information is available in response to questions submitted by prospective Bidders. The responses should not be deemed to answer all questions, which have been submitted by Bidders to the Port Authority. It addresses only those questions, which the Port Authority has deemed to require additional information and/or clarification. The fact that information has not been supplied with respect to any questions asked by a Bidders does not mean or imply, nor should it be deemed to mean or imply, any meaning, construction, or implication with respect to the terms.

The Port Authority makes no representations, warranties or guarantees that the information contained herein is accurate, complete or timely or that such information accurately represents the conditions that would be encountered during the performance of the Contract. The furnishing of such information by the Port Authority shall not create or be deemed to create any obligation or liability upon it for any reason whatsoever and each Bidder, by submitting its Bid, expressly agrees that it has not relied upon the foregoing information, and that it shall not hold the Port Authority liable or responsible therefor in any manner whatsoever. Accordingly, nothing contained herein and no representation, statement or promise, of the Port Authority, its Commissioners, officers, agents, representatives, or employees, oral or in writing, shall impair or limit the effect of the warranties of the Bidder required by this Bid or Contract and the Bidder agrees that it shall not hold the Port Authority liable or responsible therefor in any manner whatsoever.

The Questions and Answers numbering sequence will be continued sequentially in any forthcoming Addenda that may be issued.

Question # 1	Can PATH provide a clearer copy of Drawing T-144?
Answer # 1	See attached Drawing T-144 revised with signature and that is more legible when viewed electronically by accessing this Addendum with the Bid on the Port Authority website at http://www.panynj.gov/business-opportunities/bid-proposal-advertisements.html.

This communication should be initialed by you and annexed to your Bid upon submission.

In case any Bidder fails to conform to these instructions, its Bid will nevertheless be construed as though this communication had been so physically annexed and initialed.

THE PORT AUTHORITY OF NY & NJ

SELENE ORTEGA, MANAGER
COMMOIDITIES & SERVICES DIVISION

BIDDER'S FIRM NAME: _____

INITIALED: _____

DATE: _____

QUESTIONS CONCERNING THIS ADDENDUM MAY BE ADDRESSED TO JOHN SANTIAGO AT John.Santiago@panynj.gov OR (212) 435-4613.

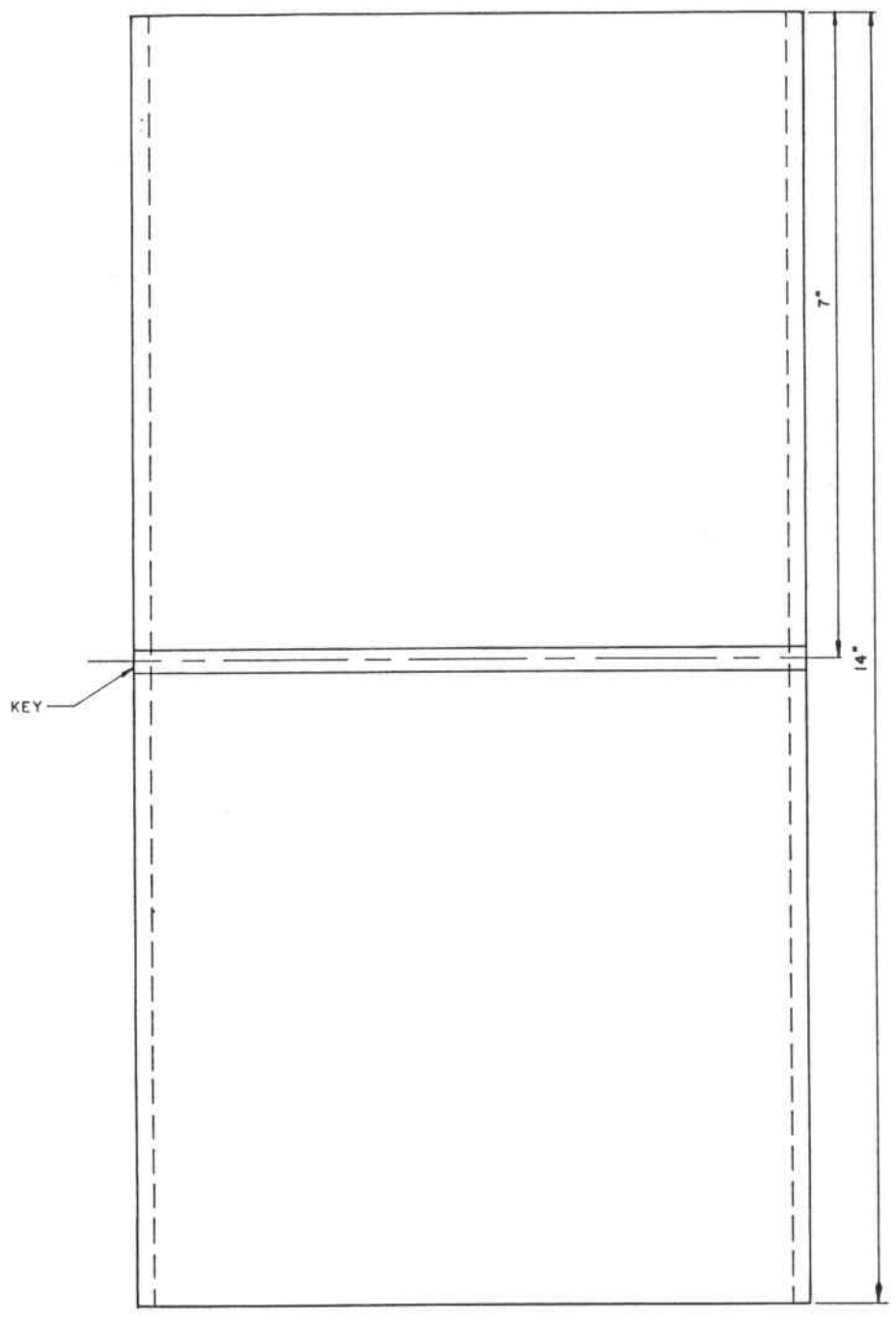

PLAN

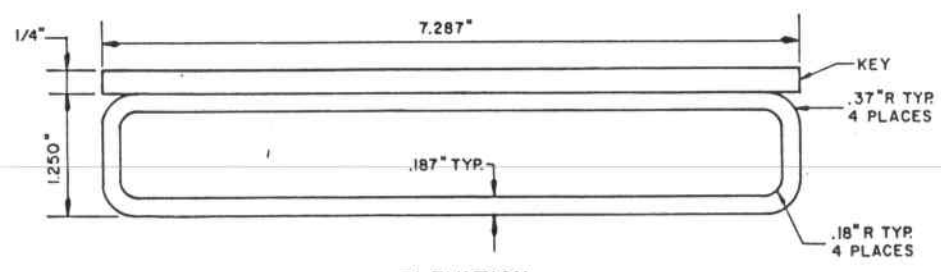

ELEVATION

SPLICE INSERT FOR COVERBOARD

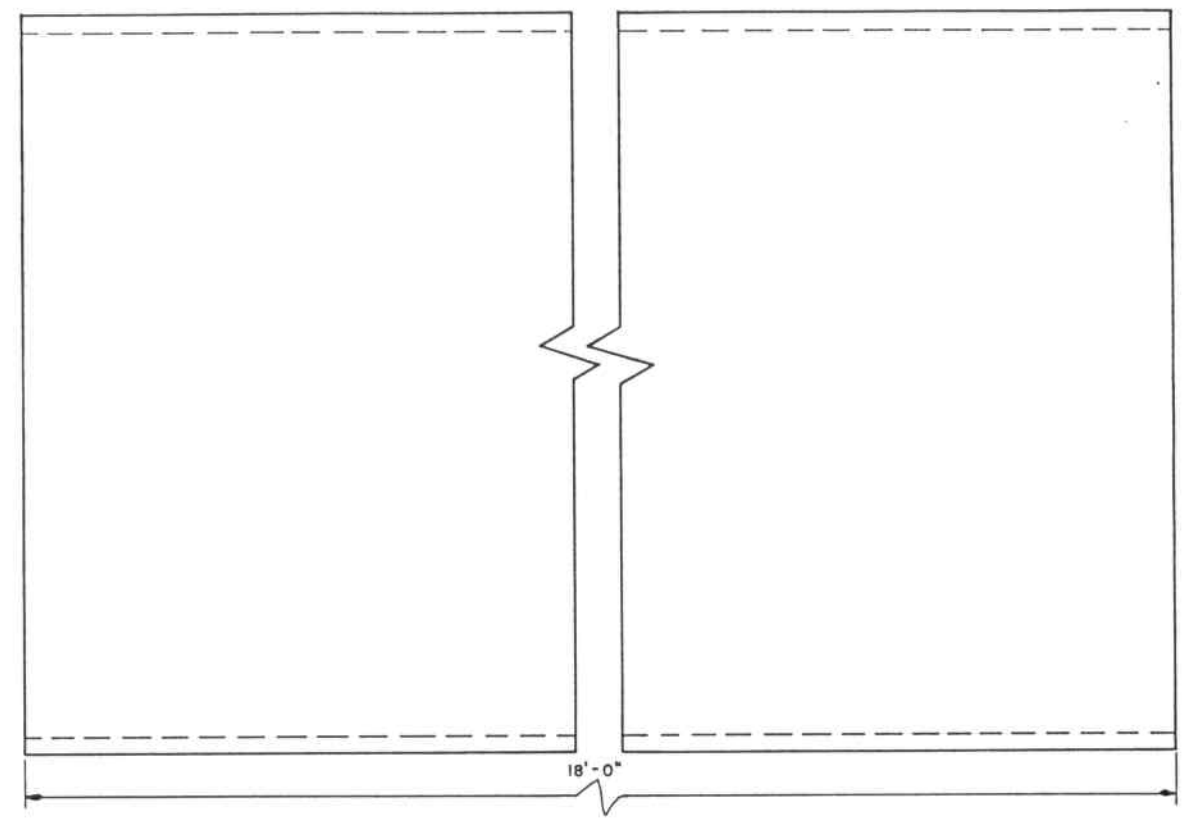

PLAN

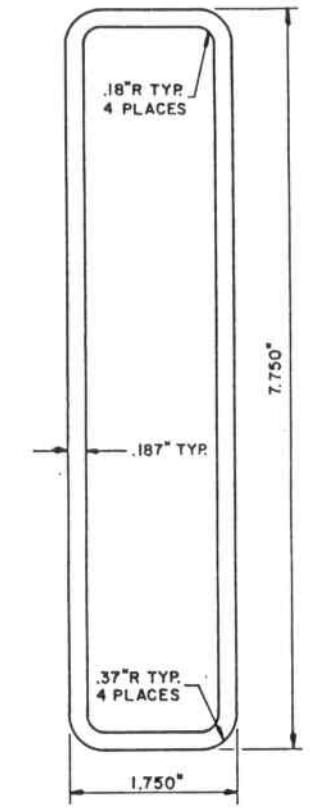

RIGHT END VIEW

TYPE A COVERBOARD

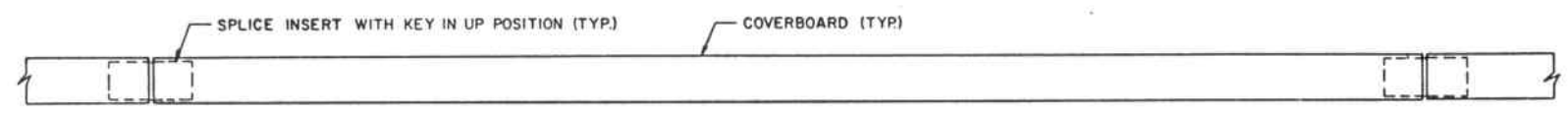

PLAN SHOWING ASSEMBLY OF COVERBOARDS

SCALE: 3/4" = 1'-0"

NOTE:

1. TYPE A FIBERGLASS COVERBOARDS AND SPLICE INSERTS SHALL MEET P.A.T.H. STANDARD SPECIFICATION FOR FIBERGLASS COVERBOARDS.
2. CUT ENDS SHALL RECEIVE RESIN COATING.

REFERENCES

NEW YORK CITY TRANSIT AUTHORITY COVERBOARD & SPLICE INSERT PART DRAWING.

DRAWING NO.

CREATIVE PULTRUSIONS, INC. DWG. NO. CP-1596 (JAN.13,1986)

Sheet Of

PORT AUTHORITY
TRANS-HUDSON CORPORATION

ENGINEER OF DESIGN
RAIL TRANSPORTATION FACILITIES

CHIEF CIVIL ENGINEER

Engineering Department
Design Divisions

Path

Title

TYPE A FIBERGLASS COVERBOARD AND SPLICE

No.	Date	Revision	Approved

This drawing subject to conditions in contract. All inventions, ideas, designs and methods herein are reserved to PATH and may not be used without its written consent.

Designed by P.I. COHEN
Drawn by P.I. Cohen
Task Leader
Date 4/21/88
Checked by
Senior Engineer
Scale FULL SCALE OR AS SHOWN
Std. Dwg. No. T-144

BRUNING 44-232 63794-28