THE PORT AUTHORITY OF NY & NJ

PROCUREMENT DEPARTMENT
2 MONTGOMERY STREET, 3RD FL.
JERSEY CITY, NJ 07302

INVITATION FOR BID/PUBLIC BID OPENING

BID INFORMATION

ISSUED DATE: 12/24/2014

TITLE: Direct Fixation Plates

BID NO: 40929

SUBMIT SEALED BIDS BEFORE THE DUE DATE AND TIME TO THE ABOVE ADDRESS WHERE THEY WILL BE PUBLICLY OPENED AND READ

BID DUE DATE: **January 14, 2015 TIME: 11:00 AM**

BUYER NAME: Rene Munoz

PHONE NO.: (201) 395-7366
FAX NO.: (201) 395-3425
EMAIL: ReMunoz@PANYNJ.gov

NOTE: This bid has a 1% DBE Goal assigned (see bid for details)

BIDDER INFORMATION
(TO BE COMPLETED BY THE BIDDER)
(PLEASE PRINT)

_____
(NAME OF BIDDING ENTITY)

_____
(ADDRESS)

_____
(CITY, STATE AND ZIP CODE)

_____
(REPRESENTATIVE TO CONTACT-NAME & TITLE **(TELEPHONE)**

_____
(E-MAIL ADDRESS)

(FEDERAL TAX I.D. NO.) **(FAX #)**

_____ BUSINESS CORPORATION _____PARTNERSHIP _____INDIVIDUAL

_____ OTHER (SPECIFY): _____

INVITATION FOR BID

- COVER PAGE: BID AND BIDDER INFORMATION
- PART I – STANDARD INFORMATION FOR BIDDERS
- PART II – CONTRACT SPECIFIC INFORMATION FOR BIDDERS
- PART III – CONTRACT SPECIFIC TERMS AND CONDITIONS
- PART IV – SIGNATURE SHEET, NAME AND RESIDENCE OF PRINCIPALS AND PRICING SHEET(S)
- PART V – SPECIFICATIONS
- ATTACHMENT A - FEDERAL TRANSIT ADMINISTRATION REQUIREMENTS
- ATTACHMENT B - STANDARD CONTRACT TERMS AND CONDITIONS

PART I – STANDARD INFORMATION FOR BIDDERS, TABLE OF CONTENTS

1. General Information: The Port Authority of New York and New Jersey 3
2. Federal Transit Administration Requirements 3
3. Form and Submission of Bid 3
4. Vendor Profile 4
5. Acknowledgment of Addenda 4
6. Firm Offer 4
7. Acceptance or Rejection of Bids 5
8. Bidder's Questions 5
9. Additional Information To and From Bidders 5
10. Union Jurisdiction 5
11. Assessment of Bid Requirements 5
12. Bidder's Prerequisites 5
13. Qualification Information 6
14. Facility Inspection 7
15. Available Documents - General 8
16. Pre-award Meeting 8
17. Disadvantaged Business Enterprises (DBE's) 8
18. Certification of Recycled Materials 8
19. City Payroll Tax 9
20. Additional Bidder Information 9
21. ATTACHMENT I-A - Certified Environmentally Preferable Products/Practices 10

PART I - STANDARD INFORMATION FOR BIDDERS

1. General Information: The Port Authority of New York and New Jersey

The Port Authority of New York and New Jersey (the "Port Authority" or the "Authority") is an agency of the States of New York and New Jersey, created and existing by virtue of the Compact of April 30, 1921, made by and between the two States, and thereafter consented to by the Congress of the United States. It is charged with providing transportation, terminals and other facilities of trade and commerce within the Port District. The Port District comprises and area of about 1,500 square miles in both States, centering about New York Harbor. The Port District includes the Cities of New York and Yonkers in New York State, and the cities of Newark, Jersey City, Bayonne, Hoboken and Elizabeth in the State of New Jersey, and over 200 other municipalities, including all or part of seventeen counties, in the two States. The Port Authority manages and/or operates all of the region's major commercial airports (Newark Liberty International, John F. Kennedy International, Teterboro, LaGuardia, Atlantic City International and Stewart International Airports), marine terminals in both New Jersey and New York (Port Newark and Elizabeth, Howland Hook and Brooklyn Piers); and its interstate tunnels and bridges (the Lincoln and Holland Tunnels; the George Washington, Bayonne, and Goethals Bridges; and the Outerbridge Crossing), which are vital "Gateways to the Nation."

In addition, the Port Authority operates the Port Authority Bus Terminal in Manhattan, the largest facility of its kind in the world, and the George Washington Bridge and Journal Square Transportation Center bus stations. A key link in interstate commuter travel, the Port Authority also operates the Port Authority Trans-Hudson Corporation (PATH), a rapid rail transit system linking Newark, and the Jersey City and Hoboken waterfronts, with midtown and downtown Manhattan. A number of other key properties are managed by the agency including but not limited to a large satellite communications facility (the Teleport) in Staten Island, and a resource recovery co-generation plant in Newark. Prior to September 11, 2001, the Port Authority's headquarters were located in the World Trade Center, and that complex is still owned and being partially redeveloped by the Authority.

2. Federal Transit Administration Requirements

This Contract is part of a program funded by the Federal Transit Administration (FTA) and the successful Bidder will be required to comply with and complete the attached certificates with the "Federal Transit Administration Requirements" annexed hereto as Attachment A.

3. Form and Submission of Bid

The Bidder shall review carefully every provision of this document, provide all the information required, and sign and return one entire copy to the Port Authority in accordance with the instructions on the Cover Sheet and Part II – Contract Specific Information for Bidders. The Bidder should retain one complete duplicate copy for its own use. The "Signature Sheet" contained herein must be completed and signed by the Bidder. The Pricing Sheet(s) contained herein must also be completed. The bid shall be sealed in the enclosed self-addressed envelope conspicuously marked with the Bidder's name, address, and Vendor Number, if available. In addition, the outside of the package must clearly state the Bid Title, the Bid Number and the Bid

Due Date. Failure to properly label submissions may cause a delay in identification, misdirection or disqualification of the submissions. In submitting this bid, the Bidder offers to assume the obligations and liabilities imposed upon it herein and expressly makes the representations and warranties required in this document.

All Bids must be received by the bid custodian on or before the due date and time specified on the cover page, at which time they will be publicly opened and read. Bids are only accepted Monday through Friday, excluding Port Authority holidays, between the hours of 8:00 a.m. and 5:00 p.m., via (1) regular mail, (2) express delivery service (e.g. UPS), or (3) hand delivery. If your bid is to be hand-delivered by messenger or you are planning to attend the formal bid opening, please note that only individuals with valid photo identification will be permitted access to the Authority's offices. Individuals without valid identification shall be turned away and their packages not accepted. Bids that are not received by the bid custodian by the scheduled bid opening date and time will be considered late.

4. Vendor Profile

To ensure maximum opportunities, it is important that Bidders keep their vendor profiles up to date with an appropriate e-mail address, as this will enable their firm to receive timely notice of advertisements, reminders, solicitations and addenda. Bidders may update their vendor profile or register as a Port Authority Vendor by accessing the online registration system at https://panynjprocure.com/VenLogon.asp. Bidders that register, as a Port Authority Vendor by accessing the on-line registration system will be sent an acknowledgement with their assigned Vendor Number.

5. Acknowledgment of Addenda

If any Addenda are posted or sent as part of this Bid, the Bidder shall complete, sign and include with its Bid the addenda form(s). In the event any Bidder fails to conform to these instructions, its Bid will nevertheless be construed as though the Addenda had been acknowledged.

If the Bidder downloaded this solicitation document, it is the responsibility of the Bidder to periodically check the Port Authority website at http://www.panynj.gov/business-opportunities/bid-proposal-advertisements.html and download any Addenda that might have been issued in connection with this solicitation.

6. Firm Offer

The Bidder offers to provide the Port Authority Trans-Hudson Corporation ("PATH") the services and to perform all Work in connection therewith required under this Contract, all as specified by the terms and conditions of the Contract, based on the Pricing Sheets provided herein. As used herein, the term "Port Authority" shall mean the Port Authority of New York and New Jersey acting on behalf of PATH.

EXCEPTIONS TAKEN OR CONDITIONS IMPOSED BY A BIDDER TO ANY PORTION OF THE CONTRACT DOCUMENTS WILL RESULT IN REJECTION OF THE BID.

7. Acceptance or Rejection of Bids

The acceptance of a bid will be by a written notice signed by an authorized representative on behalf of the Authority. No other act of the Port Authority, its Commissioners, officers, agents or employees shall constitute acceptance of a bid. The Port Authority reserves the unqualified right, in its sole and absolute discretion, to reject any or all bids or to accept any bid, which in its judgment will best serve the public interest and to waive defects in any bid. No rights accrue to any Bidder unless and until its bid is accepted.

8. Bidder's Questions

Any questions by prospective Bidders concerning the Work to be performed or the terms and conditions of the Contract may be addressed to the Contracts Specialist listed on the Cover Sheet of this document. The Contracts Specialist is only authorized to direct the attention of prospective Bidders to the portions of the Contract. No employee of the Port Authority is authorized to interpret any portion of the Contract or to give information in addition to that contained in the Contract. When Contract interpretation or additional information as to the Contract requirements is deemed necessary by the Port Authority, it will be communicated to all Bidders by written addenda issued under the name of the Manager, Purchasing Services Division of the Port Authority and will be posted on the Port Authority website. Addenda shall be considered part of the Contract.

9. Additional Information To and From Bidders

Should the Authority require additional information from the Bidder in connection with its bid, such information shall be submitted within the time frame specified by the Port Authority.

If the Bidder is a corporation, a partnership, or a joint venture, a statement of the names and residences of its officers, partners, or authorized representatives, as applicable, should be submitted on the "Name and Residence of Principals Sheet", directly following the Signature Sheet in Part IV.

10. Union Jurisdiction

All prospective Bidders are advised to ascertain whether any union now represented or not represented at the Facility will claim jurisdiction over any aspect of the operations to be performed hereunder and their attention is directed to the paragraph entitled "Harmony" in the Standard Contract Terms and Conditions.

11. Assessment of Bid Requirements

The Bidder should carefully examine and study the entire contents of these bid documents and shall make its own determinations as to the services and materials to be supplied and all other things required to be done by the Contractor.

12. Bidder's Prerequisites

Only Bidders who can comply with the prerequisites specified in Part II hereof at the time of the submission of its bid should submit bids, as only bids submitted by such Bidders will be considered. By furnishing this document to the Bidder, the Port Authority has not made a

determination that the Bidder has met the prerequisites or has otherwise been deemed qualified to perform the services. A determination that a Bidder has met the prerequisites is no assurance that it will be deemed qualified in connection with other bid requirements included herein.

13. Qualification Information

The Port Authority may give written notice to the Bidder to furnish the Port Authority with information and to meet with designated representatives of the Port Authority relating to the Bidder's qualifications and ability to fulfill the Contractor's obligations hereunder. The requested information shall be submitted no later than three (3) days after said notice unless otherwise indicated. Matters upon which the Port Authority may inquire may include, but not be limited to, the following:

a. The Bidder may be required to demonstrate that it is financially capable of performing this Contract, and the determination of the Bidder's financial qualifications will be made by the Port Authority in its sole discretion. The Bidder shall submit such financial and other relevant information as may be required by the Port Authority from time to time including, but not limited to, the following:

1. (i) Certified financial statements, including applicable notes, reflecting the Bidder's assets, liabilities, net worth, revenues, expenses, profit or loss and cash flow for the most recent calendar year or the Bidder's most recent fiscal year.

   (ii) Where the certified financial statements set forth in (i) above are not available, then either reviewed or compiled statements from an independent accountant setting forth the aforementioned information shall be provided.

   (iii) Where neither certified financial statements nor financial statements from an independent accountant are available, as set forth in (i) and (ii) above, then financial statements containing such information prepared directly by the Bidder may be submitted; such financial statements, however, must be accompanied by a signed copy of the Bidder's most recent Federal income tax return and a statement in writing from the Bidder, signed by an executive officer or their authorized designee, that such statements accurately reflect the present financial condition of the Bidder.

Where the statements submitted pursuant to subparagraphs (i), (ii) or (iii) are dated prior to forty-five (45) days before the bid opening, then the Bidder shall submit a statement in writing, signed by an executive officer of the Bidder or their designee, that the present financial condition of the Bidder is at least as good as that shown on the statements submitted.

2. Bidder's statement of work on hand, including any work on which a bid has been submitted, containing a description of the work, the annual dollar value, the location by city and state, the current percentage of completion, the expected date for completion, and the name of an individual most familiar with the Bidder's work on these jobs.

3. The name and address of the Bidder's banking institution, chief banking representative handling the Bidder's account, the Bidder's Federal Employer Identification Number (i.e., the number assigned to firms by the Federal Government for tax purposes), the Bidder's Dun and Bradstreet number, if any, the name of any

other credit service to which the Bidder has furnished information, and the number, if any, assigned by such service to the Bidder's account.

b. Information relating to the Bidder's Prerequisites, if any, as set forth in this document.

c. A statement describing the legal and financial form of the entity submitting the bid, including ownership, financial structure and a point of contact. Such entity must legally exist and be qualified to do business within the state required under this bid as of the date that bids are submitted. As applicable, provide copies of the Articles of Incorporation, By laws and Amendments, partnership agreement, joint venture agreement and/or other appropriate organizational documents for the Bidder, its officers, financial guarantors and, if any such entities are joint ventures or partnerships, for all those of ventures or partners. Describe the rationale for the selection of the structure of the entity. Describe contractual, financial, legal commitments and agreements and functional relationships among financial guarantors and officers with relation to the Work required by this bid, to the extent that they are not disclosed in the organizational documents.

d. A statement setting forth the names of those personnel to be in overall charge of the service and those who would be exclusively assigned to supervise the service and their specific roles therein, setting forth as to each the number of years of experience and in which functions and capacities each would serve.

e. Information to supplement any statement submitted in accordance with the Standard Contract Terms and Conditions entitled "Contractor's Integrity Provisions."

f. In the event that the Bidder's performance on a current or past Port Authority or PATH contract or contracts has been rated less than satisfactory, the Manager, Purchasing Services Division, may give oral or written notice to the Bidder to furnish information demonstrating to the satisfaction of such Manager that, notwithstanding such rating, such performance was in fact satisfactory or that the circumstances which gave rise to such unsatisfactory rating have changed or will not apply to performance of this Contract, and that such performance will be satisfactory.

g. The Bidder recognizes that it may be required to demonstrate to the satisfaction of the Port Authority and PATH that it in fact can perform the services as called for in this Contract and that it may be required to substantiate the warranties and representations set forth herein and the statements and assurances it may be required to give.

Neither the giving of any of the aforesaid notices to a Bidder, the submission of materials by a Bidder, any meeting which the Bidder may have with the Port Authority, nor anything stated by the Port Authority and/or PATH in any such meeting shall be construed or alleged to be construed as an acceptance of said Bidder's bid. Nothing stated in any such meeting shall be deemed to release any Bidder from its offer as contained in the bid.

14. Facility Inspection

If a Facility Inspection is deemed necessary, details regarding the Facility Inspection for all parties interested in submitting a bid will be stipulated in Part II hereof. All Bidders must present company identification and photo identification for access to the Facility.

15. Available Documents - General

Certain documents, listed in Part II hereof, will be made available for reference and examination by Bidders either at the Facility Inspection, or during regular business hours. Arrangements to review these documents at a time other than the Facility Inspection may be made by contacting the person listed in Part II as the contact for the Facility Inspection.

These documents were not prepared for the purpose of providing information for Bidders upon this Contract but they were prepared for other purposes, such as for other contracts or for design purposes for this or other contracts, and they do not form a part of this Contract. PATH makes no representation or guarantee as to, and shall not be responsible for, their accuracy, completeness or pertinence, and, in addition, shall not be responsible for the inferences or conclusions to be drawn there from.

16. Pre-award Meeting

The apparent lowest responsive and responsible Bidder may be called for a pre-award meeting prior to award of the Contract.

17. Disadvantaged Business Enterprises (DBE's)

This Solicitation is subject to the United States Department of Transportation regulations on Disadvantaged Business Enterprises (DBE's) contained in Part 26 of Title 49 of the Code of Federal Regulations. The requirements for the DBE Program are located in Part III of this Solicitation.

For more information on the Port Authority certification process, please refer to the following website: http://www.panynj.gov/business-opportunities/sd-become-certified.html.

18. Certification of Recycled Materials

Bidders are requested to submit, with their bid, a written certification entitled "Certified Environmentally Preferable Products / Practices" attached hereto as "Attachment I-A", attesting that the products or items offered by the Bidder contain the minimum percentage of post-consumer recovered material in accordance with the most recent guidelines issued by the United States Environmental Protection Agency (EPA), or, for commodities not so covered, the minimum percentage of post-consumer recovered materials established by other applicable regulatory agencies. The data submitted by the Bidder in Attachment I-A is being solicited for informational purposes only.

Recycling Definitions:

For purposes of this solicitation, the following definitions shall apply:

a. Recovered Material" shall be defined as any waste material or by-product that has been recovered or diverted from solid waste, excluding those materials and by-products generated from, and commonly reused within, an original manufacturing process.

b. "Post-consumer Material" shall be defined as any material or finished product that has served its intended use and has been discarded for disposal or recovery having completed its life as a consumer item. "Post-consumer material" is included in the broader category of "Recovered Material".

c. "Pre-consumer Material" shall be defined as any material or by-product generated after the manufacture of a product but before the product reaches the consumer, such as damaged or obsolete products. Pre-consumer Material does not include mill and manufacturing trim, scrap, or broken material that is generated at a manufacturing site and commonly reused on-site in the same or another manufacturing process.

d. "Recycled Product" shall be defined as a product that contains the highest amount of post-consumer material practicable, or when post-consumer material is impracticable for a specific type of product, contains substantial amounts of Pre-consumer Material.

e. "Recyclable Product" shall be defined as the ability of a product and its packaging to be reused, reconditioned for use, or recycled through existing recycling collection programs.

f. "Waste Reducing Product" shall be defined as any product that will result in less waste generated due to its use rather than another product designed to serve the same function with a greater waste generation rate. This shall include, but not be limited to, those products that can be reused, refilled or have a longer life expectancy and contain a lesser amount of toxic constituents.

19. City Payroll Tax

Bidders should be aware of the payroll tax imposed by the:

a. City of Newark, New Jersey for services performed in Newark, New Jersey;

b. City of New York, New York for services performed in New York, New York; and

c. City of Yonkers, New York for services performed in Yonkers, New York.

These taxes, if applicable, are the sole responsibility of the Contractor. Bidders should consult their tax advisors as to the effect, if any, of these taxes. The Port Authority provides this notice for informational purposes only and is not responsible for either the imposition or administration of such taxes. The Port Authority exemption set forth in the Paragraph headed "Sales or Compensating Use Taxes", in the Standard Contract Terms and Conditions included herein, does not apply to these taxes.

20. Additional Bidder Information

Prospective Bidders are advised that additional vendor information, including but not limited to, forms, documents and other information, including protest procedures, may be found on the Port Authority website at: http://www.panynj.gov/business-opportunities/become-vendor.html

21. ATTACHMENT I-A - Certified Environmentally Preferable Products/Practices

Bidder Name: _____Date: _____

In line with the Port Authority's efforts to promote products and practices which reduce our impact on the environment and human health, Bidders are encouraged to provide information regarding their environmentally preferable/sustainable business practices as they relate to this contract wherever possible. Bidders are requested to complete this form and submit it with their response, if appropriate. Bidders are requested to submit appropriate documentation to support the items for which the Bidder indicates a "Yes" and present this documentation, in the proper sequence of this Attachment.

1. Packaging

Has the Bidder implemented any of the following environmental initiatives? (A checkmark indicates "Yes")

____ Use of corrugated materials that exceed the required minimum EPA recommended post-consumer recycled content

____ Use of other packaging materials that contain recycled content and are recyclable in most local programs

____ Promotes waste prevention and source reduction by reducing the extent of the packaging and/or offering packaging take-back services, or shipping carton return

____ Reduces or eliminates materials which have been bleached with chlorine or chlorine derivatives

____ Eliminates any packaging that may contain polyvinyl chloride (PVC), or polystyrene or heavy metals.

If yes, a description of the practices being followed should be include with the submission.

2. Business Practices / Operations / Manufacturing

Does the Bidder engage in practices that serve to reduce or minimize an impact to the environment, including, but not necessarily limited to, the following items? (A checkmark indicates "Yes")

____ Recycles materials in the warehouse or other operations

____ Use of alternative fuel vehicles or vehicles equipped with diesel emission control devices for delivery or transportation purposes

____ Use of energy efficient office equipment or signage or the incorporation of green building design elements

____ Use of recycled paper (that meets federal specifications) in their marketing and/or resource materials

____ Other sustainable initiative

If yes, a description of the practices being followed should be included with the submission.

3. Training and Education

Does the Bidder conduct/offer a program to train or inform customers and employees of the environmental benefits of the products to be offered under this contract, and/or does the Bidder conduct environmental training of its own staff?

☐ Yes ☐ No If yes, Bidder shall attach a description of the training offered and the specific criteria targeted by the training.

4. Certifications

Has the Bidder or any of its manufacturers and/or subcontractors obtained any of the following product / industry certifications? (A checkmark indicates "Yes")

____ ISO 14000 or adopted some other equivalent environmental management system

____ Other industry environmental standards (where applicable), such as the CERES principles, LEED Certification, C2C Protocol, Responsible Care Codes of Practice or other similar standards

____ Third Party product certifications such as Green Seal, Scientific Certification Systems, Smartwood, etc.

If yes, Bidders should attach copies of the certificates obtained.

I hereby certify under penalty of law, the above statements are true and correct.

_____Name _____Date

PART II – CONTRACT SPECIFIC INFORMATION FOR BIDDERS, TABLE OF CONTENTS

1. Service(s) Required 2
2. Delivery Location(s) 2
3. Delivery Date: 2
4. Expected Contract Commencement Date: 2
5. Contract Type: 2
6. Duration of Contract: 2
7. Available Documents 2
8. Facility Inspection 2
9. Specific Bidder's Prerequisites 2
10. Contractor Staff Background Screening 3
11. FTA Bid Submission Requirements: 4
12. Background Qualification Questionnaire (BQQ) 4

PART II - CONTRACT SPECIFIC INFORMATION FOR BIDDERS

The following information may be referred to in other parts hereof, or further detailed in other parts hereof, if applicable.

1. Service(s) Required

Delivery of direct fixation tie plate assemblies, as more fully described in the Pricing Sheets in Part IV and in the Specifications, located in Part V of this Contract.

2. Delivery Location(s)

PATH "C" Yard at 120 Academy Street, Jersey City, NJ 07302, as more fully described in the Contract Specific Terms and Conditions, located in Part III of this Contract.

3. Delivery Date:

The date of delivery shall be coordinated with Port Authority as more fully defined in Part III – "Contract Specific Terms and Conditions", hereof.

FOB Destination

4. Expected Contract Commencement Date:

On or about January 30, 2015

5. Contract Type:

Requirements Contract

6. Duration of Contract:

Anticipated completion date on or about April 30, 2015.

7. Available Documents

Drawing No. C205 dated July 19, 2002.

8. Facility Inspection

DATE AND TIME: N/A

PLACE: N/A.

9. Specific Bidder's Prerequisites

Proof that the below prerequisites are met shall be submitted with the bid.

a. The Bidder shall have had at least 3 years of continuous experience immediately prior to the date of submission of its bid in the delivery of direct fixation plates and related appurtenances and during that time have actually engaged in providing said or such equipment to railroads and or transit systems under contract. The Bidder may fulfill this prerequisite if the Bidder can demonstrate to the satisfaction of the Port Authority that the persons or entities owning and controlling the Bidder have had a total of at least 3 year(s) of experience immediately prior to the date of the submission of its bid in the delivery and were actually engaged in providing such equipment to railroads or transit systems under contract during that time, or have owned and controlled other entities which have actually engaged in providing the above described equipment during that time period.
b. During the time period as stated in (a) above, the Bidder, or persons or entities owning and controlling the Bidder, shall have satisfactorily performed or be performing under at least 3 contract(s) requiring similar equipment and services to those required under this Contract.
c. In the event a bid is submitted by a joint venture the foregoing prerequisites will be considered with respect to such Bid as follows: The prerequisite in subparagraph (a) and (b) above, will be considered satisfied if the joint venture itself, or any of its participants individually, can meet the requirements. If a joint venture which has not been established as a distinct legal entity submits a bid, it and all participants in the joint venture shall be bound jointly and severally and each such participant in the joint venture shall execute the bid and do each act and thing required by this Invitation for Bid. On the original bid and wherever else the Bidder's name would appear, the name of the joint venture Bidder should appear if the joint venture is a distinct legal entity. If the Bidder is a common law joint venture, the names of all participants should be listed followed by the words "acting jointly and severally". All joint venture Bidders must provide documentation of their legal status

10. Contractor Staff Background Screening

The Contractor awarded this contract may be required to have its staff, and any subcontractor's staff working under this Contract, authorize the Authority or its designee to perform background checks. Such authorization shall be in a form acceptable to the Authority. The Contractor (and subcontractor) may also be required to use an organization designated by the Authority to perform the background checks. The cost for said background checks for staff that pass and are granted a credential shall be reimbursable to the Contractor (and its subcontractors) as an out-of-pocket expense. Staff that are rejected for a credential for any reason are not reimbursable.

As of January 29, 2007, the Secure Worker Access Consortium (S.W.A.C.) is the only Port Authority approved provider to be used to conduct background screening, except as otherwise required by federal law and/or regulation. Information about S.W.A.C., instructions, corporate enrollment, online applications, and location of processing centers can be found at http://www.secureworker.com, or S.W.A.C. may be contacted directly at (877)522-7922.

11. FTA Bid Submission Requirements:

The following items are additional bid submittal requirements and are contained within the Federal Transit Administration (FTA) Requirements and/or Solicitation Document and shall accompany your bid submission:

1. Certification Regarding Lobbying Pursuant to 31 U.S.C. 1352
2. Standard Form LLL - Disclosure of Lobbying Activities
3. Certification Regarding Debarment, Suspension, Ineligibility And Voluntary Exclusion - Lower Tier Covered Transactions
4. Buy America – Certification Requirement For Procurement of Steel, Iron, or Manufactured Products (Non- Rolling Stock)
5. Certificate of Cost and Pricing Data contained in Part IV Pricing Sheet(s)
6. Appendix A1 DBE Goals Statement in accordance with Part III clause entitled "DBE Program"
7. Appendix A2 DBE Participation Plan and Affirmation Statement
8. Appendix A3 Information on Solicited Firms

12. Background Qualification Questionnaire (BQQ)

The Bidder shall submit a completed Background Qualification Questionnaire (BQQ),

required for itself and all subcontractors and vendors known to the Bidder at the time of bid submission. This document and instructions for submitting the completed BQQ to the Authority's Office of Inspector General can be obtained at the Authority's website through the following link: http://www.panynj.gov/wtcprogress/pdf/PANYNJ_OIG_WTC_BQQP.zip

PART III – CONTRACT SPECIFIC TERMS AND CONDITIONS, TABLE OF CONTENTS

1. General Agreement 2
2. Order of Precedence 2
3. Specific Definitions 2
4. Delivery Requirements 3
5. Delivery Schedule 3
6. Time is of the Essence 4
7. Bill of Sale 4
8. Invoices 4
9. Payment 4
10. Default- Delays 5
11. Liquidated Damages 5
12. Equipment Warranty 6
13. Insurance Procured by the Contractor 6
14. Materials and Workmanship 6
15. Inspection and Acceptance 7
16. Errors and Omissions 7
17. Approval by the Engineer 7
18. Changes 7
19. Variations in Quantity 7
20. DBE Program 8
21. Attachment A – Federal Transit Administration Requirements - (Attached) 9
22. Attachment B – Contract Terms and Conditions (Attached) 9

PART III – CONTRACT SPECIFIC TERMS AND CONDITIONS

1. General Agreement

Subject to all of the terms and conditions of this Contract, the undersigned (hereinafter called the "Contractor") hereby offers and agrees to provide delivery of all materials listed and as specified in Part II, and fully set forth in the Specifications, at the location(s) listed in Part II and fully set forth in the Specifications, and do all other things necessary or proper therefor or incidental thereto, all in strict accordance with the provisions of the Contract Documents and any future changes therein; and the Contractor further agrees to assume and perform all other duties and obligations imposed upon it by this Contract.

In addition, all things not expressly mentioned in the Specifications but involved in the carrying out of their intent and in the complete and proper execution of the matters referred to in and required by this Contract are required by the Specifications, and the Contractor shall perform the same as though they were specifically delineated, described and mentioned therein.

2. Order of Precedence

Anything to the contrary herein notwithstanding, all Contract Specific Terms and Conditions shall be deemed to control in the event of a conflict with the Standard Terms and Conditions contained in this Contract.

3. Specific Definitions

To avoid undue repetition, the following terms, as used in this Contract, shall be construed as follows:

Government, United States Government, Federal or words of like import shall mean the United States of America.

UMTA or FTA - shall mean the United States Department of Transportation, Federal Transit Administration (formerly known as the Urban Mass Transportation Administration).

FTA and Government shall be used interchangeably.

DOT - shall mean the United States Department of Transportation.

DCAA - shall mean the Defense Contract Audit Agency.

The Port Authority or Authority - shall mean The Port Authority of New York and New Jersey and its wholly owned subsidiary The Port Authority Trans-Hudson Corporation (PATH).

Engineer - means the Chief Engineer of the Authority acting either personally or

through his duly authorized representatives acting within the scope of the particular authority vested in them.

Investigation - Any inquiries made by any federal, state or local criminal prosecuting agency and any inquiries concerning civil anti-trust investigations made by any federal, state or local governmental agency. Except for inquiries concerning civil anti-trust investigations, the term does not include inquiries made by any civil government agency concerning compliance with any regulation, the nature of which does not carry criminal penalties, nor does it include any background investigations for employment, or Federal, State, and local inquiries into tax returns.

Item(s) – shall mean the goods, merchandise, supplies, equipment, services or articles specified.

Manufacturer – shall mean the person or entity who will actually build the specific item to be provided as described herein.

4. Delivery Requirements

Delivery shall be FOB Destination, the Contractor shall bear all cost of freight and insurance for delivery to the Port Authority. Delivery locations shall be coordinated with Mr. John Wargo at (201) 264-7770 (jwargo@panynj.gov). All deliveries shall be made between the hours of 8:00 am and 2:00 pm, unless otherwise noted in the Specifications. The Contractor shall follow the instructions for the proper method of making deliveries. Failure to do so may result in delayed payments.

A. All deliveries must be accompanied by an original packing slip, which shall always contain:

    1. The Port Authority Purchase Order and/Contract Number.
    2. A description of each item.
    3. The quantity shipped of each item.
    4. The Contractor's packing slip/invoice number.

B. Shipping cartons shall not contain loose and/or unmarked item(s).

5. Delivery Schedule

This will be a draw-down type of contract due to the volume of materials to be purchased and available space for storage. The Contractor shall be ready to deliver portions of the order 65 calendar days after the date of award. It is expected that delivery of all materials of the order will be completed by April 30, 2015. Delivery of materials will be scheduled by PATH and the Contractor at mutually convenient dates and times.

6. Time is of the Essence

The Contractor's obligation for the performance within the time provided for this Contract is of the essence of this Contract. The Contractor guarantees that it can and will complete such fabrication, supply, delivery, factory and field testing, and on-site training within the time herein stipulated.

The delivery times shall be extended (subject, however, to the provisions of this numbered clause) only if, in the opinion of the Engineer acting personally, the Contractor is necessarily delayed in the delivery solely by fault of The Port Authority. Further, the Contractor shall be entitled to an extension of time to the extent that delay in its performance results from floods, earthquakes, storms, lightning, fire, epidemic, strike, force majeure, civil disturbance or any other cause which is beyond the reasonable control of the Contractor as determined by the Engineer.

Any reference herein to the Contractor shall be deemed to include suppliers and others performing on behalf of the Contractor, whether or not in privity of contract with the Contractor, and employees and others will be considered as agents of the Contractor.

7. Bill of Sale

The Contractor warrants that the item(s) is free of liens and other encumbrances. The Contractor shall promptly furnish to the Port Authority such bills of sale and other instruments as may be required by it, properly executed, acknowledged and delivered, assuring to it title to the item(s), free of liens and other encumbrances, upon delivery of such merchandise to the Port Authority.

8. Invoices

An invoice with a unique invoice number and the backup delivery receipts with Contract number shall be submitted to the Port Authority before payment can be made. The Contractor's invoice, which shall state:

a) The starting and ending dates of the delivery; and
b) The payment milestone for which the Contractor is billing.

All invoices shall be mailed to the address depicted on the Contract.

9. Payment

Subject to the provisions of this Contract, the Port Authority agrees to pay to the Contractor and the Contractor agrees to accept from the Port Authority as full and complete consideration for the performance of all its obligations under this Contract and as sole compensation for the items(s) and/or service(s) provided by the Contractor hereunder, a compensation calculated from the respective prices inserted by the Contractor in the Pricing Sheet(s) for actual services and goods performed/provided, forming a part of this Contract. The manner of submission of all bills for payment to the Contractor by PATH for Services rendered under this Contract shall be subject to the approval of the Superintendent/Manager in all respects, including, but not limited to, format, breakdown of items presented and

verifying records. All computations made by the Contractor and all billing and billing procedures shall be done in conformance with the following procedures:

a.) Payment shall be made in accordance with the prices for the applicable service (during the applicable Contract year) as they appear on the Pricing Sheet(s),as the same may be adjusted from time to time, minus any deductions for services not performed and/or any liquidated damages to which the invoice may be subject and/or any adjustments as may be required pursuant to increases and decreases in areas or frequencies, if applicable. All Work must be completed within the time frames specified or as designated by the Superintendent/Manager.

b.) No certificate, payment, acceptance of any Work or any other act or omission of any representative of PATH shall operate to release the Contractor from any obligation under or upon this Contract, or to estop PATH from showing at any time that such certificate, payment, acceptance, act or omission was incorrect or to preclude PATH from recovering any monies paid in excess of those lawfully due and any damage sustained by PATH.

c.) In the event an audit of received invoices should indicate that the correct sum due the Contractor for the relevant billing period is less than the amount actually paid by PATH, the Contractor shall pay to PATH the difference promptly upon receipt of PATH's statement thereof. PATH may, however, in its discretion elect to deduct said sum or sums from any subsequent monthly payments payable to the Contractor hereunder.

"Final Payment", as the term is used throughout this Contract, shall mean the final payment made for services rendered in the last month of the Base Term or extended term. However should this Contract be terminated for any reason prior to the last month of the Base Term or extended term, then Final Payment shall be the payment made for services rendered in the month during which such termination becomes effective. The Contractor's acceptance of Final Payment shall act as a full and complete release to PATH of all claims of and of all liability to the Contractor for all things done or furnished in connection with the Contract and for every act and neglect of PATH and others relating to or arising out of the Contract, including claims arising out of breach of contract and claims based on claims of third persons. No payment, however, final or otherwise shall operate to release the Contractor from any obligations in connection with this Contract.

10. Default- Delays

If the Contractor fails to perform in accordance with the terms of this Contract, the Authority may obtain the goods or services from another Vendor and charge the Contractor the difference in price and a re-letting cost, if any, plus any other damages that the Port Authority may deem appropriate.

11. Liquidated Damages

Not applicable.

12. Equipment Warranty

Notwithstanding the Specifications forming a part of this Contract, any inspection or approval of the item(s) by the Port Authority or the existence of any patent or trade name, the Contractor nevertheless unconditionally warrants that the item(s) specified herein shall be of the best quality and shall be fully fit for the purpose for which it is to be used. The Contractor unconditionally warrants all equipment furnished against defects or failures of any kind, including defects or failures in design, workmanship and materials, failure to operate satisfactorily for any reason, excepting such defects or failures which the Contractor demonstrates to the satisfaction of the Engineer have arisen solely from accident, abuse or fault of the Port Authority occurring after acceptance by the Port Authority and not due to fault on the Contractor's part for the warranty period(s) described below. In the event of defects or failures in said equipment, then upon receipt of notice thereof from the Engineer, the Contractor shall correct such defects or failures by immediately reconstructing, repairing or making such alterations or replacement of said item(s) as may be necessary or desirable in the sole opinion of the Engineer to comply with the above warranty at no cost to the Port Authority.

The foregoing warranty shall not, however, be a limitation on any rights which the Authority would have, either expressed or implied, in connection with this Contract in the absence of such warranty, said warranty being given only for the greater assurance of the Port Authority. In addition, the Contractor shall provide the following specific warranties to the Port Authority:

- All equipment shall be warranted for two (2) years from date of in-service installation or three (3) years from date of delivery to PATH; whichever is longer.

- Contractor agrees that it will make available to PATH replacement equipment, parts and service of equipment either under the warranty set forth, above, or through purchase for (5) years from the date of installation. If the Contractor discontinues manufacturing or support of any product supplied, Contractor shall provide PATH with the latest drawings, parts lists, Contractor contacts and PATH shall have the right to have the product or services manufactured or provided by any other source at PATH discretion without any additional fees.

13. Insurance Procured by the Contractor

Not Applicable.

14. Materials and Workmanship

All Item(s) and/or Service(s) shall be manufactured and/or provided in accordance with the best current practice in the industry and free from defects. All Item(s) and/or Service(s) shall at all time and places be subject to the inspection of the Engineer. Should any Item(s) or Service(s) fail to meet the Engineer's approval, they shall be forthwith made good, replaced or corrected, as the case may be, by the Contractor, at its own expense. All item(s) shall be new item(s).

15. Inspection and Acceptance

Inspection and acceptance will be conducted at the destination, unless otherwise provided and agreed upon by the Port Authority and the Contractor. Any risk of loss will be the Contractor's responsibility until such delivery, inspection and acceptance is made, unless loss results from negligence of the Port Authority.

16. Errors and Omissions

If the Contractor discovers any errors or omissions in the Specifications or in the Work undertaken and executed by it, it shall immediately notify the Engineer and the Engineer shall promptly verify the same. If, with the knowledge of such error or omission and prior to the correction thereof, the Contractor proceeds with any work affected thereby, it shall do so at its own risk, and the work so done shall not be considered as work done under and in performance of this Contract.

17. Approval by the Engineer

The approval by the Engineer of any item(s) shall be construed merely to mean that at that time the Engineer knows of no good reason for objecting thereto and no such approval shall release the Contractor from its full responsibility for the satisfactory construction and operation of the item(s). The decision of the Engineer shall be conclusive, final and binding on the parties as to all questions arising out of, under, or in connection with this Contract (including questions of breach of Contract).

18. Changes

Acceptance of Contractor's bid will be by Contract signed by the Port Authority. The Port Authority may at any time, by a written order, make changes within the general scope of this Contract in any one or more of the following: (a) drawings, designs, or specifications; (b) method of shipment or packing; and (c) place of delivery. If any such change causes an increase or decrease in the cost of, or the time required for, performance of this Contract, an equitable adjustment shall be made in the Contract price or delivery schedule, or both, and the Contract shall be modified in writing accordingly. Any claim by the Seller for adjustment under this section must be asserted within 30 days from the date of receipt by the Seller of a notification of change: provided, however, that nothing in this section, "Changes," shall excuse the Seller from proceeding with the Contract as changed. Except as otherwise provided herein no payment for Changes shall be made, unless the Changes have been authorized in writing by the Authority.

19. Variations in Quantity

The quantities set forth in the Price Schedule are estimates; actual total quantity purchased may be greater or lower. The Port Authority reserves the right to increase or decrease the quantity of Items called for under this Contract at the Unit Prices specified. The Port Authority may exercise the option to vary the quantity by written notice to the Contractor. Delivery of the additional quantity of Items shall continue at the same rate as the like items called for under the Contract, unless the parties otherwise agree. All items to be added shall be set forth in a Change Order.

20. DBE Program

This Contract is subject to the United States Department of Transportation regulations on Disadvantaged Business Enterprises (DBEs) contained in Part 26 of Title 49 of the Code of Federal Regulations. The following goal for DBE participation has been set for this Contract:

1 % for firms owned and controlled by socially and economically disadvantaged individuals[1] and certified as DBE's by the Authority. Eligible DBE firms are listed on the following Uniform Certification Programs (UCPs) websites:

New York UCP – http://www.nysucp.net/

New Jersey UCP – http://www.njucp.net/

By bidding on this Contract, the bidder assures the Authority that it will meet the foregoing goal and shall submit the DBE Goals Statement form (Appendix A1) with its Bid. If the bidder determines it cannot make this assurance it may nevertheless submit a bid but in such event it shall note on the DBE Goals Statement form the percentage of DBE participation it anticipates, including documentation supporting the good faith efforts made to achieve the goals set forth in the Contract.

The bidder shall submit with his Proposal the DBE Participation Plan and Affirmation Statement (Appendix A2) for each DBE firm he intends to use on this Contract. The DBE Participation Plan and Affirmation Statement shall provide the name and address of each DBE firm, a description of the work to be performed, the dollar value of each DBE subcontract and the signature affirmation from each DBE firm participating in this Contract.

A bidder who fails to meet the DBE goal for this Contract and fails to demonstrate to the Port Authority that the bidder has made good faith efforts to meet same shall not be eligible to be awarded the Contract. The following are illustrative of good faith efforts:

A. Attendance at a pre-bid meeting, if any, scheduled by the Authority to inform DBEs of subcontracting opportunities under a given solicitation;
B. Advertisement in general circulation media, trade association publications, and minority-focused media for at least 20 days before bids or proposals are due. If 20 days are not available, publication for a shorter reasonable time is acceptable;
C. Written notification to DBEs that their interest in the Contract is solicited;
D. Efforts made to select portions of the work proposed to be performed by DBEs in order to increase the likelihood of achieving the stated goal;
E. Efforts to negotiate with DBEs for specific sub-bids including at a minimum;
    1. The names, addresses, and telephone numbers of DBEs that were contacted;
    2. A description of the information provided to DBEs regarding the plans and specifications for portions of the work to be performed; and
    3. A statement of why additional agreements with DBEs were not reached;

[1] Individuals who are rebuttably presumed to be socially and economically disadvantaged include women, Blacks, Hispanics, Native Americans, Asian-Pacific Americans, and Asian-Indian Americans. A bidder may meet the DBE goal by using any combination of disadvantaged businesses.

F. Information concerning each DBE the bidder contacted but rejected as unqualified, and the reasons for the bidder's rejection;
G. Efforts made to assist the DBEs contacted that need assistance in obtaining bonding or insurance required by the bidder or Authority.

The bidder shall submit with its Bid the completed Information on Solicited Firms form (Appendix A3) listing every firm that provided a quotation to the bidder for any subcontract to be performed under this Contract, whether or not the firms are DBE certified and whether or not the firms' quotes were included in the final Bid.

21. Attachment A – Federal Transit Administration Requirements - (Attached)

22. Attachment B – Contract Terms and Conditions (Attached)

PART IV – SIGNATURE SHEET, NAME AND RESIDENCE OF PRINCIPALS SHEET AND PRICING SHEET(S), TABLE OF CONTENTS

1. SIGNATURE SHEET 2
2. NAME AND RESIDENCE OF PRINCIPALS SHEET 3
3. PRICING SHEET(S) 4
   Entry of Prices 4
   Pricing Sheet 5

PART IV – SIGNATURE SHEET, NAME AND RESIDENCE OF PRINCIPALS SHEET AND PRICING SHEET(S)

1. SIGNATURE SHEET

OFFER: The undersigned offers and agrees to furnish to the Port Authority of New York and New Jersey the services and/or materials in compliance with all terms, conditions, specifications and addenda of the Contract. Signature also certifies understanding and compliance with the certification requirements of the standard terms and conditions as contained in the Standard Contract Terms and Conditions. This offer shall be irrevocable for 90 days after the date on which the Port Authority opens this bid.

ONLY THE COMPANY NAMED AS THE BIDDING ENTITY BELOW WILL RECEIVE PAYMENT. THIS MUST BE THE SAME NAMED COMPANY AS INDICATED ON THE COVER SHEET

Bidding Entity_____

Bidder's Address_____

City, State, Zip_____

Telephone No._____ FAX_____

Email_____ EIN# _____

SIGNATURE_____ Date_____

Print Name and Title_____

Note: This offer shall be irrevocable for 90 days after the date on which the Port Authority opens this bid.

_____

Signature of Person Signing Above

ACKNOWLEDGEMENT:

STATE OF: _____

COUNTY OF: _____

On this ___day *of*_____, 20 , personally came before me, _____,who duly sworn by me, did depose that (s)he has knowledge of the matters herein stated and they are in all respects true and that (s)he has been authorized to execute the foregoing offer and statement of irrevocability on behalf of said corporation, partnership or firm.

_____

Notary Public

NOTE: If a joint venture is allowed, duplicate this Signature Sheet and have each party to the joint venture sign separately and affix to the back of this Signature Sheet.

Bidder attention is called to the certification requirements contained in the Standard Contract Terms and Conditions, Part III. Indicate below if a signed, explanatory statement in connection with this section is attached hereto. ☐

If certified by the Port Authority as an SBE or MWBE: _____ (indicate which one and date).

2. NAME AND RESIDENCE OF PRINCIPALS SHEET

Names and Residence of Principals of Bidder. If general or limited partner, or individual, so indicate.

NAME	TITLE	ADDRESS OF RESIDENCE (Do not give business address)

3. PRICING SHEET(S)

Entry of Prices

a. The prices quoted shall be written in figures, in ink, preferably black ink, where required in the spaces provided on the Pricing Sheet(s) attached hereto and made a part hereof.

b. All Bidders are asked to ensure that all charges quoted for similar items in the Contract are consistent.

c. Prices must be submitted for each Item required on the Pricing Sheet(s).

d. All Bidders are asked to ensure that all figures are inserted as required, and that all computations made have been verified for accuracy. The Bidder is advised that the Port Authority may verify only that Bid or those Bids that it deems appropriate and may not check each and every Bid submitted for computational errors. In the event that errors in computation are made by the Bidder, the Port Authority reserves the right to correct any error and to re-compute the Estimated Total Delivered Contract Price, as required, based upon the applicable Unit Price inserted by the Bidder, which amount shall govern in all cases.

e. In the event that a Bidder quotes an amount in the Total Price column but omits to quote a Unit Price for that amount in the space provided, the Port Authority reserves the right to compute and insert the appropriate Unit Price.

f. The Estimated Total Delivered Contract Price is solely for the purpose of facilitating the comparisons of Bids. Compensation shall be in accordance with the section of this Contract entitled "Payment".

Pricing Sheets

Item No.	Description	Estimated Quantity	Unit of Measure	Unit Price	Total Price
1	Direct Fixation Plate Assembly as specified	11,420	Assembly*	$ _____	$ _____

*Detailed breakdown of what an assembly consists of is described in Part V of the bid document.

Estimated Total Delivered Contract Price (in words):

$ _____

LEAD TIME:
Indicate lead-time necessary for completion of fabrication testing and delivery of equipment (see Part III, paragraph entitled "Delivery Requirements"):

_____

Bidder shall certify in the form prescribed below that, to the best of its knowledge and belief, the cost or pricing data submitted was accurate, complete and current.

AWARD WILL BE MADE TO THE LOWEST RESPONSIVE AND RESPONSIBLE BIDDER FOR THE TOTAL LUMP SUM BID PRICE.

CERTIFICATE OF CURRENT COST OR PRICING DATA:

This is to certify that, to the best of my knowledge and belief, the cost or pricing data submitted, either actually or by specific identification in writing, to The Port Authority of NY & NJ or to The Port Authority of NY & NJ's representative in support of:

Bid No. 40929 are accurate, complete, and current as of [Insert Date]*.

This certification includes the cost or pricing data supporting any advance agreements and forward pricing rate agreements between the offeror and The Port Authority of NY & NJ that are part of the bid.

Firm: _____

Name: _____

Signature: _____

Title: _____

Date: _____

PART V – SPECIFICATIONS, TABLE OF CONTENTS

PART V – SPECIFICATIONS, TABLE OF CONTENTS 1
1. Item(s) and/or Service(s) Required by the Specifications 2
2. Detailed Specifications 2

PART V – SPECIFICATIONS

1. Items Required by the Specifications

These Specifications relate generally to the supplying and delivery of direct fixation plate assemblies.

2. Detailed Specifications

The materials to be furnished under this purchase order contract shall be new and are intended to replace existing damaged materials currently in track, and in service. Existing direct fixation plate anchors will not be replaced and will be reused during the plate assembly renewals. It is required, therefore, that direct fixation plate assembly components furnished are dimensionally identical to existing components to be replaced.

Existing direct fixation plate assembly components are shown on Drawing No. C205, dated July 19, 2002 and described in detail below.

Each Assembly will consist of :

1	each	cast baseplate (Pandrol part# CTP-10413 or approved equal)
1	each	plate pad (Pandrol part# PAD-10417 or approved equal)
1	each	rail seat pad (Pandrol part# PAD-10415 or approved equal)
2	each	side post insulators (Pandrol part# INS-6686 or approved equal)
4	each	bushings (Pandrol part#SRS-10416 or approved equal)
4	each	lock washers (Pandrol part# SCR-10095 or approved equal)
4	each	screws (Pandrol part# SRS10093 or approved equal)

END OF SECTION

FEDERAL TRANSIT ADMINISTRATION
REQUIRED CONTRACT PROVISIONS

1. INCORPORATION OF FEDERAL TRANSIT ADMINISTRATION TERMS 2
2. FEDERAL CHANGES 2
3. NO FEDERAL GOVERNMENT OBLIGATIONS TO THIRD PARTIES 2
4. ORGANIZATIONAL CONFLICT OF INTEREST 2
5. CERTIFICATION - DEBARMENT AND SUSPENSION 3
6. CERTIFICATION - LOBBYING RESTRICTIONS –CONTRACTS EXCEEDING $100,000 4
7. ACCESS TO RECORDS AND REPORTS 10
8. CIVIL RIGHTS 11
9. CARGO PREFERENCE - USE OF UNITED STATES FLAG VESSELS 12
10. DAVIS-BACON AND COPELAND ANTI-KICKBACK ACTS – CONTRACTS EXCEEDING $2000 12
11. CONTRACT WORK HOURS AND SAFETY STANDARDS ACT – CONTRACTS EXCEEDING $100,000 19
12. VETERANS EMPLOYMENT 20
13. SEISMIC SAFETY (IF APPLICABLE) 20
14. ENERGY CONSERVATION 21
15. CLEAN WATER REQUIREMENTS – CONTRACTS EXCEEDING $100,000 21
16. CLEAN AIR REQUIREMENTS – CONTRACTS EXCEEDING $100,000 21
17. FLY AMERICA 21
18. CONTRACTS INVOLVING FEDERAL PRIVACY ACT REQUIREMENTS 22
19. PREFERENCE FOR RECYCLED PRODUCTS 22
20. PROGRAM FRAUD AND FALSE OR FRAUDULENT STATEMENTS OR RELATED ACTS 22
21. TRANSIT EMPLOYEE PROTECTIVE REQUIREMENTS 23
22. ADA ACCESS REQUIREMENTS 23
23. BUY AMERICA 23

CERTIFICATION REGARDING LOBBYING PURSUANT TO 31 U.S.C. 1352 24

STANDARD FORM LLL - DISCLOSURE OF LOBBYING ACTIVITIES 25

INSTRUCTIONS FOR COMPLETION OF SF-LLL, DISCLOSURE OF LOBBYING ACTIVITIES 26

CERTIFICATION REGARDING DEBARMENT, SUSPENSION, INELIGIBILITY AND VOLUNTARY EXCLUSION - LOWER TIER COVERED TRANSACTIONS 28

INSTRUCTIONS FOR COMPLETION OF CERTIFICATION REGARDING DEBARMENT, SUSPENSION, INELIGIBILITY AND VOLUNTARY EXCLUSION -LOWER TIER COVERED TRANSACTIONS 29

1. INCORPORATION OF FEDERAL TRANSIT ADMINISTRATION TERMS

As used herein, the term "Agreement" shall mean "Contract". This Agreement is anticipated to be partially funded by United States Department of Transportation's Federal Transit Administration (FTA).

As used herein, "Contractor" and "Subcontractor" shall have the same meanings as "Consultant" and "Subconsultant", respectively.

Anything to the contrary herein notwithstanding, all mandated terms by the FTA shall be deemed to control in the event of a conflict with other provisions contained in this Contract. The Contractor shall not perform any act, fail to perform any act, or refuse to comply with any Authority requests that would cause the Authority to be in violation of the FTA terms and conditions.

Each and every provision required by the FTA to be inserted in this Contract shall be deemed to be inserted herein and the Contract shall be read and enforced as though it were included herein. If any provision of this Contract shall be such as to effect non-compliance with any FTA requirement, such provision shall not be deemed to form part hereof, but the balance of this Contract shall remain in full force and effect.

2. FEDERAL CHANGES

The Contractor shall at all times comply with all applicable FTA regulations, policies, procedures and directives, including without limitation those listed directly or by reference, as they may be amended or promulgated from time to time during the term of this Contract. Contractor's failure to so comply shall constitute a material breach of this Contract. The most recent Federal laws, regulations, policies, and administrative practices apply to this Contract at any particular time, unless FTA issues a written determination otherwise. All standards or limits within the this docuemnt are minimum requirements, unless modified by the FTA or subagency thereof.

3. NO FEDERAL GOVERNMENT OBLIGATIONS TO THIRD PARTIES

The Authority and the Contractor acknowledge and agree that, notwithstanding any concurrence by the Federal Government in or approval of the solicitation or award of the underlying contract, absent the express written consent by the Federal Government, the Federal Government is not a party to this Contract and shall not be subject to any obligations or liabilities to the Authority, Contractor, or any other party (whether or not a party to that contract) pertaining to any matter resulting from the underlying contract.

The Contractor agrees to include the above clause in each subcontract financed in whole or in part with Federal Assistance provided by the FTA. It is further agreed that the clause shall not be modified, except to identify the subcontractor who will be subject to its provisions.

4. ORGANIZATIONAL CONFLICT OF INTEREST

A. This Contract may give rise to a potential for an organizational conflict of interest. An organizational conflict of interest exists when the nature of the work to be performed

under the contract may, without some form of restriction on future activities; result in an unfair competitive advantage to the Contractor.

1.) The Contractor shall have access to confidential and/or sensitive Authority information in the course of contract performance. Additionally, the Contractor may be provided access to proprietary information obtained from other contracted entities during contract performance. The Contractor agrees to protect all such information from disclosure unless so authorized, in writing, by the Authority and to refrain from using such information for any purpose other than that for which it was furnished.

2.) To the extent that the Contractor either (a) uses confidential and/or sensitive Authority information or proprietary information obtained from other Authority contractors to develop any form of document, report, or plan that is determined by the Authority to be the basis, in whole or in part, of any subsequent solicitation issued by the Authority or (b) develops written specifications that are used in any subsequent solicitation issued by the Authority, the Contractor agrees that it shall not be eligible to compete for such subsequent solicitation(s) as a prime or principal contractor or as part of any teaming arrangement unless the Authority provides, in writing, a specific waiver of this restriction. The duration of any restriction imposed under this subparagraph shall not exceed the length of the initial performance period of any subsequently awarded contract for which the Contractor was ineligible to compete.

B. The Contractor, by submitting its bid or proposal, agrees to the above stated conditions and terms and further agrees to perform all duties under the contract and, in doing so, not to enter into contractual agreements with Authority prime contractors and first-tier subcontractors in such a way as to create an organizational conflict of interest.

C. If the Authority determines that the Contractor has violated any term of this numbered clause, the Authority may take any appropriate action available under the law or regulations to obtain redress to include, but not be limited to, requiring the Contractor to terminate any affiliation or contractual arrangement with an Authority prime contractor or first-tier subcontractor at no cost to the Authority; determining the Contractor ineligible to compete for or be awarded any subsequent or “follow-on” contracts that may be based upon the Contractor’s actions under this Contract or violations of this numbered clause, or terminating this Contract, in whole or in part.

5. CERTIFICATION - DEBARMENT AND SUSPENSION

This Contract is a covered transaction for purposes of 2 CFR Parts 180 and 1200. As such, the Contractor is required to verify that none of the Contractor, its principals, as defined at 2 CFR 180.995, or affiliates, as defined at 2 CFR 180.905, are excluded or disqualified as defined at 2 CFR 180.935 and 180.940.

The Contractor is required to comply with 2 CFR 180, Subpart C and must include the requirement to comply with 2 CFR 180, Subpart C in any lower tier covered transaction it enters into.

By signing and submitting its bid or proposal, the proposer certifies as follows:

The certification in this clause is a material representation of fact relied upon by the Port Authority of New York and New Jersey. If it is later determined that the proposer knowingly rendered an erroneous certification, in addition to remedies available to the Port Authority of New York and New Jersey, the

Federal Government may pursue available remedies, including but not limited to suspension and/or debarment. The proposer agrees to comply with the requirements of 2 CFR 180, Subpart C while this offer is valid and throughout the period of any contract that may arise from this offer. The proposer further agrees to include a provision requiring such compliance in its lower tier covered transactions.

A. FTA requires that each potential Contractor, for major third party contracts, complete a certification entitled "Certification Regarding Debarment, Suspension, Ineligibility, and Voluntary Exclusion" for itself and its principals and requires each Subcontractor or Supplier (for Subcontracts and Supplier agreements expected to equal or exceed $25,000) to complete a certification entitled "Certification Regarding Debarment, Suspension, Ineligibility and Voluntary Exclusion – Lower Tiered Covered Transactions" for itself and its principals. Copies of the required Certification forms and accompanying instructions are set forth following the clause herein entitled “Integrity Monitor”.

B. In the event that the Contractor has certified prior to award that it is not proposed for debarment, debarred, suspended, or voluntarily excluded from covered transactions by any Federal Department or agency and such certification is found to be false, this Contract may be canceled, terminated or suspended by the Authority and the Contractor will be liable for any and all damages incurred by the Authority because of such cancellation, termination or suspension because of such false certification.

C. The Contractor shall obtain certifications from all known potential Subcontractors and Suppliers (for which payments are expected to equal or exceed $25,000) and submit such certifications to the address set forth in E below.

D. Prior to the award of any Subcontracts or Supplier agreements expected to equal or exceed $25,000, regardless of tier, any prospective Subcontractor or Supplier who has not previously submitted a certification for this Contract must execute and submit to the Contractor a certification in the form set forth following the clause herein entitled “Integrity Monitor” which will be deemed a part of the resulting Subcontract and Supplier agreement.

E. The originals of any Certifications or correspondence relating hereto shall be sent by the Contractor to the Contracts Specialist listed in the solicitation document.

F. The Contractor shall not knowingly enter into any Subcontracts or Supplier agreements with a person that is proposed for debarment, debarred, suspended, declared ineligible or voluntarily excluded from covered transactions.

G. As required by FTA, the Contractor and its Subcontractors or Suppliers required to file the certification have a continuing duty to disclose, and shall provide immediate written notice to the Authority if, at any time, it learns that its certification was erroneous when submitted or has become erroneous by reason of changed circumstances.

6. CERTIFICATION - LOBBYING RESTRICTIONS –CONTRACTS EXCEEDING $100,000

A. Definitions as used in this Clause:

1.) "Agency," as defined in 5 U.S.C. 552(f), includes Federal executive departments and agencies as well as independent regulatory commissions and Government corporations, as defined in 31 U.S.C. 9101(1). As used in the Certification set forth following the clause herein entitled “Integrity Monitor” t, it also includes any other public agency.

2.) "Covered Federal action” means any of the following Federal actions:

a. The awarding of any Federal contract;
b. The making of any Federal grant;
c. The making of any Federal loan;
d. The entering into of any cooperative agreement; and
e. The extension, continuation, renewal, amendment, or modification of any Federal contract, grant, loan, or cooperative agreement. As used in the above referenced Certification, it includes the award of the contract with which it is associated.

3.) "Indian tribe" and "tribal organization" have the meaning provided in Section 4 of the Indian Self Determination and Education Assistance Act (25 U.S.C. 450B). Alaskan natives are included under the definitions of Indian tribes in that Act.

4.) "Influencing or attempting to influence" means making, with the intent to influence, any communication to or appearance before an officer or employees of any agency, a Member of Congress, an officer or employee of Congress, or an employee of a Member of Congress in connection with any covered Federal action.

5.) "Local government" means a unit of government in a State and, if chartered, established, or otherwise recognized by a State for the performance of a governmental duty, including a local public authority, a special district, an intrastate district, a council of governments, a sponsor group representative organization, and any other instrumentality of a local government. It also includes a bi-state agency.

6.) "Officer or employee of an agency" includes the following individuals who are employed by an agency:

a. An individual who is appointed to a position in the Government under title 5, United States Code, including a position under a temporary appointment;
b. A member of the uniformed services as defined in section 101(3), title 37, United States Code;

7.) A special government employee as defined in Section 202, title 18, United States Code;

a. An individual who is a member of a Federal advisory committee, as defined by the Federal Advisory Committee Act, Title 5, United States Code Appendix 2; and
b. An employee of a bi-state agency.

8.) "Person" means an individual, corporation, company, association, authority, firm, partnership, society, State, and local government, regardless of whether such entity is

operated for profit or not for profit. This term excludes an Indian tribe, tribal organization, or any other Indian Organization with respect to expenditures specifically permitted by other Federal law.

9.) "Reasonable Compensation" means, with respect to a regularly employed officer or employee of any person, compensation that is consistent with the normal compensation for such officer or employee for work that is not furnished to, not funded by, or not furnished in cooperation with the Federal Government.

10.) "Reasonable Payment" means, with respect to professional and other technical services, a payment in an amount that is consistent with the amount normally paid for such services in the private sector.

11.) "Recipient" includes all contractors and subcontractors at any tier in connection with a Federal Contract. The term excludes an Indian Tribe, tribal organization, or any other Indian organization with respect to expenditures specifically permitted by other Federal law.

12.) "Regularly Employed" means, with respect to an officer or employee of a person requesting or receiving a Federal Contract, an officer or employee who is employed by such person for at least one hundred and thirty (130) working days within one (1) year immediately preceding the date of the submission that initiates agency consideration of such person for receipt of such contract. An officer or employee who is employed by such person for less than one hundred and thirty (130) working days within one (1) year immediately preceding the date of the submission that initiates agency consideration of such person shall be considered to be regularly employed as soon as he or she is employed by such person for one hundred and thirty (130) working days.

13.) "State" means a State of the United States, the District of Columbia, the Commonwealth of Puerto Rico, a territory or possession of the United States, an agency or instrumentality of a State, and a multi-state, regional, or interstate entity having governmental duties and powers.

B. Prohibition

1.) Section 1352 of Title 31, United States Code provides in part that no appropriated funds may be expended by the recipient of a Federal contract, grant, loan, or cooperative agreement to pay any person for influencing or attempting to influence an officer or employee of any agency, a Member of Congress, an officer or employee of Congress, or an employee of a Member of Congress in connection with any of the following covered Federal actions: the awarding of any Federal contract; the making of any Federal grant; the making of any Federal loan; the entering into of any cooperative agreement; and the extension, continuation, renewal, amendment, or modification of any Federal contract, grant, loan, or cooperative agreement. For the purposes of the Certification included herein following the clause entitled “Integrity Monitor”, it includes the award of the associated contract.

2.) The prohibition does not apply as follows:

a. Agency and legislative liaison by own employees.

(i) The prohibition on the use of appropriated funds, in subparagraph B.1.) of this Section, does not apply in the case of a payment of reasonable compensation made to an officer or employee of a person requesting or receiving a Federal contract or the contract associated with the certification if the payment is for agency and legislative liaison activities not directly related to a covered Federal Action.

(ii) For purposes of subparagraph B. 2.) a.(i) of this Section, providing any information specifically requested by an agency or Congress is allowable at any time.

(iii) For purposes of subparagraph B. 2.) a.(i) of this Section, the following agency and legislative liaison activities are allowable at any time only where they are not related to specific solicitation for any covered Federal action.

(a.) Discussing with an agency (including individual demonstrations) the qualities and characteristics of the person's products or services, conditions or terms of sales and service capabilities; and,

(b.) Technical discussions and other activities regarding the application or adaptation of the person's products or services for an agency's use.

(iv) For purposes of paragraph B. 2)a.(i) of this Section, the following agency and legislative liaison activities are allowable only where they are prior to formal solicitation of any covered Federal action:

(a.) Providing any information not specifically requested but necessary for an agency to make an informed decision about initiation of a covered Federal action;

(b.) Technical discussions regarding the preparation of an unsolicited proposal prior to its official submission; and

(c.) Capability presentations by persons seeking awards from an agency pursuant to the provisions of the Small Business Act, as amended by Public Law 95-507 and other subsequent amendments.

(v) Only those activities expressly authorized by subparagraph B. 2)a. of this Section are allowable under subparagraph B. 2)a.

b. Professional and Technical Services by Own Employees.

(i) The prohibition on the use of appropriated funds, in subparagraph B. of this Section, does not apply in the case of a payment of reasonable compensation made to an officer or employee of a person requesting or receiving a Federal contract or an extension, continuation, renewal, amendment, or modification

of a Federal contract or the contract associated with the certification if payment is for professional or technical services rendered directly in the preparation, submission, or negotiation of any bid, proposal, or application for that contract or for meeting requirements imposed by or pursuant to law as a condition for receiving that contract.

(ii) For purposes of subparagraph B. 2.) b. (i) of this Section, "professional and technical services" shall be limited to advice and analysis directly applying any professional or technical discipline. For example, drafting of a legal document accompanying a bid or proposal by a lawyer is allowable. Similarly, technical advice provided by an engineer on the performance or operational capability of a piece of equipment rendered directly in the negotiation of a contract is allowable. However, communications with the intent to influence made by a professional (such as a licensed lawyer) or a technical person (such as a licensed accountant) are not allowable under this Section unless they provided advice and analysis directly applying their professional or technical expertise and unless the advice or analysis is rendered directly and solely in the preparation, submission or negotiation of a covered Federal action. Thus, for example, communications with the intent to influence made by a lawyer that do not provide legal advice or analysis directly and solely related to the legal aspects of his or her client's proposal, but generally advocate one proposal over another are not allowable under this Section because the lawyer is not providing professional legal services. Similarly, communications with the intent to influence made by an engineer providing an engineering analysis prior to the preparation or submission of a bid or proposal are not allowable under this Section since the engineer is providing technical services but not directly in the preparation, submission or negotiation of a covered Federal action.

(iii) Requirements imposed by or pursuant to law as a condition for receiving a covered Federal award include those required by law or regulation, or reasonably expected to be required by law or regulation, and any other requirements in the actual award documents.

(iv) Only those services expressly authorized by subparagraph B. 2.) b. this Section are allowable under subparagraph B. 2.) b.

c. Reporting for Own Employees.

No reporting is required with respect to payments of reasonable compensation made to regularly employed officers or employees of a person.

d. Professional and Technical Services by Other than Own Employees.

(i) The prohibition on the use of appropriated funds, in subparagraph B. l.) of this Section, does not apply in the case of any reasonable payment to a person, other than an officer or employee of a person requesting or receiving a covered Federal action, if the payment is for professional or technical services rendered directly in the preparation, submission, or negotiation of any bid, proposal, or application for that Federal contract or for meeting

requirements imposed by or pursuant to law as a condition for receiving that Federal contract.

(ii) For purposes of subparagraph B. 2.) d. (i) of this Section, "professional and technical services" shall be limited to advice and analysis directly applying any professional or technical discipline. For example, drafting of a legal document accompanying a bid or proposal by a lawyer is allowable. Similarly, technical advice provided by an engineer on the performance or operational capability of a piece of equipment rendered directly in the negotiation of a contract is allowable. However, communications with the intent to influence made by a professional (such as a licensed lawyer) or a technical person (such as a licensed accountant) are not allowable under this Section unless they provided advice and analysis directly applying their professional or technical expertise and unless the advice or analysis is rendered directly and solely in the preparation, submission or negotiation of a covered Federal action. Thus, for example, communications with the intent to influence made by a lawyer that do not provide legal advice or analysis directly and solely related to the legal aspects of his or her client's proposal, but generally advocate one proposal over another are not allowable under this Section because the lawyer is not providing professional legal services. Similarly, communications with the intent to influence made by an engineer providing an engineering analysis prior to the preparation or submission of a bid or proposal are not allowable under this Section since the engineer is providing technical services but not directly in the preparation, submission or negotiation of a covered Federal action.

(iii) Requirements imposed by or pursuant to law as a condition for receiving a covered Federal award include those required by law or regulation, or reasonably expected to be required by law or regulation, and any other requirements in the actual award documents.

(iv) Persons other than officers or employees of a person requesting or receiving a covered Federal action include consultants and trade associations.

(v) Only those services expressly authorized by subparagraph B. 2.) d. of this Section are allowable under subparagraph B. 2.) d.

C. Disclosure

1.) Each person who requests or receives from the Authority a Contract with Federal assistance shall file with the Authority a certification entitled "Certification Regarding Lobbying Pursuant to 31 U.S.C. 1352," as set forth following the clause herein entitled “Integrity Monitor” that the person has not made, and will not make, any payment prohibited by subparagraph B. of this Clause.Each person who requests or receives from the Authority a Contract with Federal assistance shall file with the Authority a disclosure form entitled "Disclosure of Lobbying Activities Pursuant to 31 U.S.C. 1352" (Standard Form-LLL), as set forth following the clause herein entitled “Integrity Monitor”, if such person has made or has agreed to make any payment using non-appropriated funds (to include profits from any covered Federal action), which would be prohibited under subparagraph B. of this Clause if paid for with appropriated funds.

2.) Each person shall file a disclosure form at the end of each calendar quarter in which there occurs any event that requires disclosure or that materially affects the accuracy of the information contained in any disclosure form previously filed by such person under subparagraph C.2) of this Section. An event that materially affects the accuracy of the information reported includes:

a. A cumulative increase of $25,000 or more in the amount paid or expected to be paid for influencing or attempting to influence a covered Federal action; or
b. A change in the person(s) or individual(s) influencing or attempting to influence a covered Federal action; or
c. A change in the officer(s), employee(s), or Member(s) contacted to influence or attempt to influence a covered Federal action.

3.) Any person who requests or receives from a person referred to in subparagraph C.1) of this Section a subcontract exceeding $100,000 at any tier under a Federal contract shall file a certification, and a disclosure form, if required, to the next tier above.

4.) All disclosure forms, but not certifications, shall be forwarded from tier to tier until received by the person referred to in subparagraph C.1) of this Section. That person shall forward all disclosure forms to the Authority.

D. Agreement

1.) In accepting any contract resulting from this solicitation, the person submitting the offer agrees not to make any payment prohibited by this Clause.

E. Penalties

1.) Any person who makes an expenditure prohibited under subparagraph A of this Clause shall be subject to a civil penalty of not less than $10,000 and not more than $100,000 for each such expenditure.
2.) Any person who fails to file or amend the disclosure form to be filed or amended if required by the Clause, shall be subject to a civil penalty of not less than $10,000 and not more than $100,000 for each such failure.
3.) Contractors may rely without liability on the representations made by their Subcontractors in the certification and disclosure form.

F. Cost Allowability

Nothing in this Clause is to be interpreted to make allowable or reasonable any costs which would be unallowable or unreasonable in accordance with Part 31 of the Federal Acquisition Regulation. Conversely, costs made specifically unallowable by the requirements in this Clause will not be made allowable under any of the provisions of Part 31 of the Federal Acquisition Regulation.

7. ACCESS TO RECORDS AND REPORTS

The Contractor agrees to provide the Authority, the FTA Administrator, the Comptroller General of the United States or any of their authorized representatives access to and the right to examine and inspect any books, documents, papers and records of the Contractor which are directly pertinent to this Contract for the purposes of making audits, examinations, excerpts and transcriptions. The Contractor also agrees, pursuant to 49 CFR 633.15 to provide the FTA Administrator or authorized representatives thereto including any Project Management Oversight (PMO) Contractor access to the Contractor's records and construction sites pertaining to the project.

The Contractor shall make available records related to the contract to the Authority, the Secretary of Transportation and the Comptroller General or any authorized officer or employee of any of them for the purposes of conducting an audit and inspection.

The Contractor agrees to permit any of the foregoing parties to reproduce by any means whatsoever or to copy excerpts and transcriptions as reasonably needed.

The Contractor agrees to maintain all books, records, accounts and reports required under this Contract for a period of not less than three (3) years after final payment is made by the Authority and all other pending matters are closed, except in the event of litigation or settlement of claims arising from the performance of this Contract, in which case the Contractor agrees to maintain same until the Authority, the FTA Administrator, the Comptroller General, or any of their duly authorized representatives, have disposed of all such litigation, appeals, claims or exceptions related thereto.

This requirement is independent of the Authority's requirements for record retention contained elsewhere in the contract documents.

8. CIVIL RIGHTS

A. Nondiscrimination - In accordance with Title VI of the Civil Rights Act, as amended, 42 U.S.C. § 2000d, section 303 of the Age Discrimination Act of 1975, as amended, 42 U.S.C. § 6102, and section 202 of the Americans with Disabilities Act of 1990, 42 U.S.C. § 12132, the Contractor agrees that it will not discriminate against any employee or applicant for employment because of race, color, creed, national origin, sex, age, or disability. In addition, the Contractor agrees to comply with applicable Federal implementing regulations and other implementing requirements FTA may issue.

B. Equal Employment Opportunity - The following equal employment opportunity requirements apply to the underlying contract:

1.) Race, Color, Creed, National Origin, Sex - In accordance with Title VII of the Civil Rights Act, as amended, 42 U.S.C. § 2000e, and Federal transit laws at 49 U.S.C. § 5332, the Contractor agrees to comply with all applicable equal employment opportunity requirements of U.S. Department of Labor (U.S. DOL) regulations, "Office of Federal Contract Compliance Programs, Equal Employment Opportunity, Department of Labor," 41 C.F.R. Parts 60 *et seq*., (which implement Executive Order No. 11246, "Equal Employment Opportunity," as amended by Executive Order No. 11375, "Amending Executive Order 11246 Relating to Equal Employment Opportunity," 42 U.S.C. § 2000e note), and with any applicable Federal statutes, executive orders, regulations, and Federal policies that may in the future affect construction activities undertaken in the course of the Project. The Contractor agrees to take affirmative action to ensure that applicants are employed, and that employees are treated during employment, without regard to their race, color, creed, national

origin, sex, or age. Such action shall include, but not be limited to, the following: employment, upgrading, demotion or transfer, recruitment or recruitment advertising, layoff or termination; rates of pay or other forms of compensation; and selection for training, including apprenticeship. In addition, the Contractor agrees to comply with any implementing requirements FTA may issue.

2.) Age - In accordance with section 4 of the Age Discrimination in Employment Act of 1967, as amended, 29 U.S.C. § 623, the Contractor agrees to refrain from discrimination against present and prospective employees for reason of age. In addition, the Contractor agrees to comply with any implementing requirements FTA may issue.

3.) Disabilities - In accordance with section 102 of the Americans with Disabilities Act, as amended, 42 U.S.C. § 12112, the Contractor agrees that it will comply with the requirements of U.S. Equal Employment Opportunity Commission, "Regulations to Implement the Equal Employment Provisions of the Americans with Disabilities Act," 29 C.F.R. Part 1630, pertaining to employment of persons with disabilities. In addition, the Contractor agrees to comply with any implementing requirements FTA may issue.

C. The Contractor also agrees to include these requirements in each subcontract related to this project, modified only if necessary to identify the affected parties.

9. CARGO PREFERENCE - USE OF UNITED STATES FLAG VESSELS

If this Contract involves equipment, materials, or commodities that may be transported by ocean vessels, the Contractor herein agrees:

A. To utilize privately owned United States-flag commercial vessels to ship at least fifty percent (50%) of the gross tonnage (computed separately for dry bulk carriers, dry cargo liners, and tankers) involved, whenever shipping any equipment, material, or commodities pursuant to this Contract, to the extent such vessels are available at fair and reasonable rates for United States-flag commercial vessels.

B. To furnish within twenty (20) days following the date of loading for shipments originating within the United States or within thirty (30) working days following the date of loading for shipments originating outside the United States, a legible copy of a rated, "on-board" commercial ocean bill-of-lading in English for each shipment of cargo described in paragraph (1) above to the FTA Administrator and grantee (through the prime contractor in the case of subcontractor bills-of-lading) and to the Division of National Cargo, Office of Market Development, Maritime Administration, Washington, DC 20230.

C. To include these requirements in all subcontracts issued pursuant to this Contract when the subcontract may involve the transport of equipment, material, or commodities by ocean vessel.

10. DAVIS-BACON AND COPELAND ANTI-KICKBACK ACTS – CONTRACTS EXCEEDING $2000

The Davis-Bacon and Copeland Acts are codified at 40 USC 3141, *et seq.* and 18 USC 874. The Acts apply to grantee construction contracts and subcontracts that "at least partly are financed by a loan or grant from the Federal Government." 40 USC 3145(a), 29 CFR 5.2(h), 49 CFR 18.36(i)(5). The Acts apply to any construction contract over $2,000. 40 USC 3142(a), 29 CFR 5.5(a). 'Construction,' for purposes of the Acts, includes "actual construction, alteration and/or repair, including painting and decorating." 29 CFR 5.5(a). The requirements of both Acts are incorporated into a single clause (*see* 29 CFR 3.11) enumerated at 29 CFR 5.5(a) and reproduced below and are applicable if this Contract is a construction contract (as delineated above) over $2000.

A. Minimum Wages

1.) All laborers and mechanics employed or working upon the site of the work (or under the United States Housing Act of 1937 or under the Housing Act of 1949 in the construction or development of the project), will be paid unconditionally and not less often than once a week, and without subsequent deduction or rebate on any account (except such payroll deductions as are permitted by regulations issued by the Secretary of Labor under the Copeland Act (29 CFR part 3)), the full amount of wages and bona fide fringe benefits (or cash equivalents thereof) due at time of payment computed at rates not less than those contained in the wage determination of the Secretary of Labor which, if applicable, is attached hereto and made a part hereof (the attachment is the most current determination), regardless of any contractual relationship which may be alleged to exist between the Contractor and such laborers and mechanics. Determinations may change during the term of the Contract, and the wages and fringe benefits required by the most recent determination of the Secretary of Labor are those to be used.

Contributions made or costs reasonably anticipated for bona fide fringe benefits under section 1(b)(2) of the Davis-Bacon Act on behalf of laborers or mechanics are considered wages paid to such laborers or mechanics, subject to the provisions of paragraph (A)(4) of this Section; also, regular contributions made or costs incurred for more than a weekly period (but not less often than quarterly) under plans, funds, or programs which cover the particular weekly period, are deemed to be constructively made or incurred during such weekly period. Such laborers and mechanics shall be paid the appropriate wage rate and fringe benefits on the wage determination for the classification of work actually performed, without regard to skill, except as provided in 29 CFR Part 5.5(a)(4). Laborers or mechanics performing work in more than one classification may be compensated at the rate specified for each classification for the time actually worked therein: Provided, That the employer's payroll records accurately set forth the time spent in each classification in which work is performed. The wage determination (including any additional classifications and wage rates conformed under paragraph (A)(2) of this Section) and the Davis-Bacon poster (WH-1321) shall be posted at all times by the Contractor and its subcontractors at the site of the work in a prominent and accessible place where it can be easily seen by the workers.

2.)

a. The contracting officer shall require that any class of laborers or mechanics, including helpers, which is not listed in the wage determination and which is to be employed under the contract shall be classified in conformance with the wage determination. The contracting officer shall approve an additional classification and wage rate and fringe benefits therefore only when the following criteria have been met:

(i) Except with respect to helpers as defined as 29 CFR 5.2(n)(4), the work to be performed by the classification requested is not performed by a classification in the wage determination;

(ii) The classification is utilized in the area by the construction industry;

(iii) The proposed wage rate, including any bona fide fringe benefits, bears a reasonable relationship to the wage rates contained in the wage determination; and

(iv) With respect to helpers as defined in 29 CFR 5.2(n)(4), such a classification prevails in the area in which the work is performed.

b. If the contractor and the laborers and mechanics to be employed in the classification (if known), or their representatives, and the contracting officer agree on the classification and wage rate (including the amount designated for fringe benefits where appropriate), a report of the action taken shall be sent by the contracting officer to the Administrator of the Wage and Hour Division, Employment Standards Administration, U.S. Department of Labor, Washington, DC 20210. The Administrator, or an authorized representative, will approve, modify, or disapprove every additional classification action within 30 days of receipt and so advise the contracting officer or will notify the contracting officer within the 30-day period that additional time is necessary.

c. In the event the Contractor, the laborers or mechanics to be employed in the classification or their representatives, and the contracting officer do not agree on the proposed classification and wage rate (including the amount designated for fringe benefits, where appropriate), the contracting officer shall refer the questions, including the views of all interested parties and the recommendation of the contracting officer, to the Administrator for determination. The Administrator, or an authorized representative, will issue a determination within 30 days of receipt and so advise the contracting officer or will notify the contracting officer within the 30-day period that additional time is necessary.

d. The wage rate (including fringe benefits where appropriate) determined pursuant to paragraphs A (2)(ii) (b) or (c) of this Section, shall be paid to all workers performing work in the classification under this Contract from the first day on which work is performed in the classification.

3.) Whenever the minimum wage rate prescribed in the contract for a class of laborers or mechanics includes a fringe benefit which is not expressed as an hourly rate, the Contractor shall either pay the benefit as stated in the wage determination or shall pay another bona fide fringe benefit or an hourly cash equivalent thereof.

4.) If the Contractor does not make payments to a trustee or other third person, the Contractor may consider as part of the wages of any laborer or mechanic the amount of any costs reasonably anticipated in providing bona fide fringe benefits under a plan or program, Provided, That the Secretary of Labor has found, upon the written request of the Contractor, that the applicable standards of the Davis-Bacon Act have been met. The Secretary of Labor may require the Contractor to set aside in a separate account assets for the meeting of obligations under the plan or program.

5.)

a. The contracting officer shall require that any class of laborers or mechanics which is not listed in the wage determination and which is to be employed under the contract shall be classified in conformance with the wage determination. The contracting officer shall approve an additional classification and wage rate and fringe benefits therefor only when the following criteria have been met:

(i) The work to be performed by the classification requested is not performed by a classification in the wage determination;
(ii) The classification is utilized in the area by the construction industry; and
(iii) The proposed wage rate, including any bona fide fringe benefits, bears a reasonable relationship to the wage rates contained in the wage determination.

b. If the Contractor and the laborers and mechanics to be employed in the classification (if known), or their representatives, and the contracting officer agree on the classification and wage rate (including the amount designated for fringe benefits where appropriate), a report of the action taken shall be sent by the contracting officer to the Administrator of the Wage and Hour Division, Employment Standards Administration, Washington, DC 20210. The Administrator, or an authorized representative, will approve, modify, or disapprove every additional classification action within 30 days of receipt and so advise the contracting officer or will notify the contracting officer within the 30-day period that additional time is necessary.

c. In the event the Contractor, the laborers or mechanics to be employed in the classification or their representatives, and the contracting officer do not agree on the proposed classification and wage rate (including the amount designated for fringe benefits, where appropriate), the contracting officer shall refer the questions, including the views of all interested parties and the recommendation of the contracting officer, to the Administrator for determination. The Administrator, or an authorized representative, will issue a determination with 30 days of receipt and so advise the contracting officer or will notify the contracting officer within the 30-day period that additional time is necessary.

d. The wage rate (including fringe benefits where appropriate) determined pursuant to paragraphs A (2)(ii)(b) or (c) of this Section, shall be paid to all workers performing work in the classification under this Contract from the first day on which work is performed in the classification.

B. Withholding

The Authority shall upon its own action or upon written request of an authorized representative of the Department of Labor withhold or cause to be withheld from the Contractor under this Contract or any other Federal contract with the same prime contractor, or any other federally-assisted contract subject to Davis-Bacon prevailing wage requirements, which is held by the same prime contractor, so much of the accrued payments or advances as may be considered necessary to pay laborers and mechanics, including apprentices, trainees, and helpers, employed by the Contractor or any subcontractor the full amount of wages required by the contract. In the event of failure to pay any laborer or mechanic, including any apprentice, trainee, or helper, employed or working on the site of the work (or under the

United States Housing Act of 1937 or under the Housing Act of 1949 in the construction or development of the project), all or part of the wages required by the contract, the Authority may, after written notice to the Contractor, sponsor, applicant, or owner, take such action as may be necessary to cause the suspension of any further payment, advance, or guarantee of funds until such violations have ceased.

C. Payrolls and Basic Records

1.) Payrolls and basic records relating thereto shall be maintained by the Contractor during the course of the work and preserved for a period of three years thereafter for all laborers and mechanics working at the site of the work (or under the United States Housing Act of 1937, or under the Housing Act of 1949, in the construction or development of the project). Such records shall contain the name, address, and social security number of each such worker, his or her correct classification, hourly rates of wages paid (including rates of contributions or costs anticipated for bona fide fringe benefits or cash equivalents thereof of the types described in section 1(b)(2)(B) of the Davis-Bacon Act), daily and weekly number of hours worked, deductions made and actual wages paid. Whenever the Secretary of Labor has found under 29 CFR 5.5(a)(1)(iv) that the wages of any laborer or mechanic include the amount of any costs reasonably anticipated in providing benefits under a plan or program described in section 1(b)(2)(B) of the Davis-Bacon Act, the Contractor shall maintain records which show that the commitment to provide such benefits is enforceable, that the plan or program is financially responsible, and that the plan or program has been communicated in writing to the laborers or mechanics affected, and records which show the costs anticipated or the actual cost incurred in providing such benefits. Contractors employing apprentices or trainees under approved programs shall maintain written evidence of the registration of apprenticeship programs and certification of trainee programs, the registration of the apprentices and trainees, and the ratios and wage rates prescribed in the applicable programs.

2.)

a. The Contractor shall submit weekly for each week in which any contract work is performed a copy of all payrolls to the Authority for transmission to the Federal Transit Administration. The payrolls submitted shall set out accurately and completely all of the information required to be maintained under section 5.5(a)(3)(i) of Regulations, 29 CFR part 5. This information may be submitted in any form desired. Optional Form WH-347 is available for this purpose and may be purchased from the Superintendent of Documents (Federal Stock Number 029-005-00014-1), U.S. Government Printing Office, Washington, DC 20402. The prime contractor is responsible for the submission of copies of payrolls by all subcontractors.

b. Each payroll submitted shall be accompanied by a "Statement of Compliance," signed by the Contractor or subcontractor or his or her agent who pays or supervises the payment of the persons employed under the contract and shall certify the following:

(i) That the payroll for the payroll period contains the information required to be maintained under section 5.5(a)(3)(i) of Regulations, 29 CFR part 5 and that such information is correct and complete;

(ii) That each laborer or mechanic (including each helper, apprentice, and trainee) employed on the contract during the payroll period has been paid the

full weekly wages earned, without rebate, either directly or indirectly, and that no deductions have been made either directly or indirectly from the full wages earned, other than permissible deductions as set forth in Regulations, 29 CFR part 3;

(iii) That each laborer or mechanic has been paid not less than the applicable wage rates and fringe benefits or cash equivalents for the classification of work performed, as specified in the applicable wage determination incorporated into the contract.

c. The weekly submission of a properly executed certification set forth on the reverse side of Optional Form WH-347 shall satisfy the requirement for submission of the "Statement of Compliance" required by paragraph C(2)(b) of this Section.

d. The falsification of any of the above certifications may subject the Contractor or subcontractor to civil or criminal prosecution under section 1001 of title 18 and section 231 of title 31 of the United States Code.

3.) The Contractor or subcontractor shall make the records required under paragraph C(1) of this Section available for inspection, copying, or transcription by authorized representatives of the Federal Transit Administration or the Department of Labor, and shall permit such representatives to interview employees during working hours on the job. If the Contractor or subcontractor fails to submit the required records or to make them available, the Federal agency may, after written notice to the Contractor, sponsor, applicant, or owner, take such action as may be necessary to cause the suspension of any further payment, advance, or guarantee of funds. Furthermore, failure to submit the required records upon request or to make such records available may be grounds for debarment action pursuant to 29 CFR 5.12.

D. Apprentices and Trainees

1.) Apprentices - Apprentices will be permitted to work at less than the predetermined rate for the work they performed when they are employed pursuant to and individually registered in a bona fide apprenticeship program registered with the U.S. Department of Labor, Employment and Training Administration, Bureau of Apprenticeship and Training, or with a State Apprenticeship Agency recognized by the Bureau, or if a person is employed in his or her first 90 days of probationary employment as an apprentice in such an apprenticeship program, who is not individually registered in the program, but who has been certified by the Bureau of Apprenticeship and Training or a State Apprenticeship Agency (where appropriate) to be eligible for probationary employment as an apprentice. The allowable ratio of apprentices to journeymen on the job site in any craft classification shall not be greater than the ratio permitted to the Contractor as to the entire work force under the registered program. Any worker listed on a payroll at an apprentice wage rate, who is not registered or otherwise employed as stated above, shall be paid not less than the applicable wage rate on the wage determination for the classification of work actually performed. In addition, any apprentice performing work on the job site in excess of the ratio permitted under the registered program shall be paid not less than the applicable wage rate on the wage determination for the work actually performed. Where a Contractor is performing construction on a project in a locality other than that in which its program is registered, the ratios and wage rates (expressed in

percentages of the journeyman's hourly rate) specified in the Contractor's or subcontractor's registered program shall be observed. Every apprentice must be paid at not less than the rate specified in the registered program for the apprentice's level of progress, expressed as a percentage of the journeymen hourly rate specified in the applicable wage determination. Apprentices shall be paid fringe benefits in accordance with the provisions of the apprenticeship program. If the apprenticeship program does not specify fringe benefits, apprentices must be paid the full amount of fringe benefits listed on the wage determination for the applicable classification. If the Administrator of the Wage and Hour Division of the U.S. Department of Labor determines that a different practice prevails for the applicable apprentice classification, fringes shall be paid in accordance with that determination. In the event the Bureau of Apprenticeship and Training, or a State Apprenticeship Agency recognized by the Bureau, withdraws approval of an apprenticeship program, the Contractor will no longer be permitted to utilize apprentices at less than the applicable predetermined rate for the work performed until an acceptable program is approved.

2.) Trainees - Except as provided in 29 CFR 5.16, trainees will not be permitted to work at less than the predetermined rate for the work performed unless they are employed pursuant to and individually registered in a program which has received prior approval, evidenced by formal certification by the U.S. Department of Labor, Employment and Training Administration. The ratio of trainees to journeymen on the job site shall not be greater than permitted under the plan approved by the Employment and Training Administration. Every trainee must be paid at not less than the rate specified in the approved program for the trainee's level of progress, expressed as a percentage of the journeyman hourly rate specified in the applicable wage determination. Trainees shall be paid fringe benefits in accordance with the provisions of the trainee program. If the trainee program does not mention fringe benefits, trainees shall be paid the full amount of fringe benefits listed on the wage determination unless the Administrator of the Wage and Hour Division determines that there is an apprenticeship program associated with the corresponding journeyman wage rate on the wage determination which provides for less than full fringe benefits for apprentices. Any employee listed on the payroll at a trainee rate who is not registered and participating in a training plan approved by the Employment and Training Administration shall be paid not less than the applicable wage rate on the wage determination for the classification of work actually performed. In addition, any trainee performing work on the job site in excess of the ratio permitted under the registered program shall be paid not less than the applicable wage rate on the wage determination for the work actually performed. In the event the Employment and Training Administration withdraws approval of a training program, the Contractor will no longer be permitted to utilize trainees at less than the applicable predetermined rate for the work performed until an acceptable program is approved.

3.) Equal employment opportunity - The utilization of apprentices, trainees and journeymen under this part shall be in conformity with the equal employment opportunity requirements of Executive Order 11246, as amended, and 29 CFR Part 30.

E. Compliance with Copeland Act Requirements

The Contractor shall comply with the requirements of 29 CFR part 3, which are incorporated by reference in this Contract.

F. Subcontracts

The Contractor or subcontractor shall insert in any subcontracts the clauses contained in 29 CFR 5.5(a)(1) through (10) and such other clauses as the Federal Transit Administration may by appropriate instructions require, and also a clause requiring the subcontractors to include these clauses in any lower tier subcontracts. The prime contractor shall be responsible for the compliance by any subcontractor or lower tier subcontractor with all the contract clauses in 29 CFR 5.5.

G. Contract Termination: Debarment

A breach of the contract clauses in 29 CFR 5.5 may be grounds for termination of the contract, and for debarment as a contractor and a subcontractor as provided in 29 CFR 5.12.

H. Compliance with Davis-Bacon and Related Act Requirements

All rulings and interpretations of the Davis-Bacon and Related Acts contained in 29 CFR parts 1, 3, and 5 are herein incorporated by reference in this Contract.

I. Disputes Concerning Labor Standards

Disputes arising out of the labor standards provisions of this Contract shall not be subject to the general disputes clause of this Contract. Such disputes shall be resolved in accordance with the procedures of the Department of Labor set forth in 29 CFR parts 5, 6, and 7. Disputes within the meaning of this clause include disputes between the Contractor (or any of its subcontractors) and the contracting agency, the U.S. Department of Labor, or the employees or their representatives.

J. Certification of Eligibility –

1.) By entering into this Contract, the Contractor certifies that neither it (nor he or she) nor any person or firm who has an interest in the Contractor's firm is a person or firm ineligible to be awarded Government contracts by virtue of section 3(a) of the Davis-Bacon Act or 29 CFR 5.12(a)(1).

2.) No part of this Contract shall be subcontracted to any person or firm ineligible for award of a Government contract by virtue of section 3(a) of the Davis-Bacon Act or 29 CFR 5.12(a)(1).

3.) The penalty for making false statements is prescribed in the U.S. Criminal Code, 18 U.S.C. 1001.

11. CONTRACT WORK HOURS AND SAFETY STANDARDS ACT – CONTRACTS EXCEEDING $100,000

The Contract Work Hours and Safety Standards Act applies to grantee contracts and subcontracts under 40 USC 3701(b)(1)(B)(iii) and (b)(2), 29 CFR 5.2(h), 49 CFR 18.36(i)(6) for contracts for construction, and non-construction projects that employ "laborers or mechanics on a public work, where the contract amount is greater than $100,000.

A. Overtime Requirements

No Contractor or subcontractor contracting for any part of the contract work which may require or involve the employment of laborers or mechanics shall require or permit any such laborer or mechanic in any workweek in which he or she is employed on such work to work in excess of forty hours in such workweek unless such laborer or mechanic receives compensation at a rate not less than one and one-half times the basic rate of pay for all hours worked in excess of forty hours in such workweek.

B. Violation; liability for unpaid wages; liquidated damages

In the event of any violation of the clause set forth in paragraph A of this Section the Contractor and any subcontractor responsible therefor shall be liable for the unpaid wages. In addition, such Contractor and subcontractor shall be liable to the United States for liquidated damages. Such liquidated damages shall be computed with respect to each individual laborer or mechanic, including watchmen and guards, employed in violation of the clause set forth in paragraph A of this Section, in the sum of $10 for each calendar day on which such individual was required or permitted to work in excess of the standard workweek of forty hours without payment of the overtime wages required by the clause set forth in paragraph A of this Section.

C. Withholding for unpaid wages and liquidated damages

The Authority shall upon its own action or upon written request of an authorized representative of the Department of Labor withhold or cause to be withheld, from any moneys payable on account of work performed by the Contractor or subcontractor under any such contract or any other Federal contract with the same prime contractor, or any other federally-assisted contract subject to the Contract Work Hours and Safety Standards Act, which is held by the same prime contractor, such sums as may be determined to be necessary to satisfy any liabilities of such contractor or subcontractor for unpaid wages and liquidated damages as provided in the clause set forth in paragraph B of this Section.

D. Subcontracts

The Contractor or subcontractor shall insert in any subcontracts the clauses set forth in paragraphs A through D of this Section and also a clause requiring the subcontractors to include these clauses in any lower tier subcontracts. The prime contractor shall be responsible for compliance by any subcontractor or lower tier subcontractor with the clauses set forth in paragraphs A through D of this Section.

12. VETERANS EMPLOYMENT

Contractors working on a capital project funded using such assistance agrees to give a hiring preference, to the extent practicable, to veterans (as defined in 5 U.S.C. 2108) who have the requisite skills and abilities to perform the construction work required under the contract. This subsection shall not be understood, construed or enforced in any manner that would require an employer to give a preference to any veteran over any equally qualified applicant who is a member of any racial or ethnic minority, female, an individual with a disability, or a former employee. The Contractor shall ensure that its hiring practices reflect the requirements of this section and shall, upon request, provide to the Authority personnel data which reflects compliance with the terms contained herein.

13. SEISMIC SAFETY (IF APPLICABLE)

If this is a contract for the construction of new buildings or additions to existing buildings, the Contractor agrees that any new building or addition to an existing building will be constructed in accordance with standards for Seismic Safety required in Department of Transportation Seismic Safety Regulations 49 CFR Part 41 and will certify compliance to the extent required by the regulation. The Contractor also agrees to ensure that all work performed under this Contract including work performed by a subcontractor is in compliance with the standards required by the Seismic Safety Regulations and the certification of compliance. The completed certification of compliance is to be submitted to the Port Authority's project manager. The seismic safety standards applicable to this Contract are contained in Section 2312 ICBO Uniform Building Code (UBC), as modified by the Appendix to Title 27, Chapter 1 (Volume 7), of the Administrative Code and Charter of the City of New York at RS 9-6 Earthquake Loads.

14. ENERGY CONSERVATION

The Contractor agrees to comply with the mandatory energy efficiency standards and policies within the applicable State energy conservation plans issued in compliance with the Energy Policy and Conservation Act, 42 U.S.C. §6321 et seq and the National Environmental Policy Act, 42 U.S.C. §4321 et seq. Accordingly, the Contractor agrees that the construction of any new building, or any addition, alteration or renovation of any existing building which materially increases the heating or cooling requirements for the building will comply with mandatory standards and policies relating to energy efficiency which are contained in 42 USC §6321 et seq., Article 11 of the New York State Energy Law and in Parts 7810 to7815 of Title 9, Subtitle BB of the New York Codes, Rules and Regulations. The Contractor also agrees to ensure that all work performed under this Contract including work performed by a Subcontractor is in compliance with the requirements of this Section.

15. CLEAN WATER REQUIREMENTS – CONTRACTS EXCEEDING $100,000

A. The Contractor agrees to comply with all applicable standards, orders or regulations issued pursuant to the Federal Water Pollution Control Act, as amended, 33 USC §1251 et seq.

B. The Contractor agrees to report each violation to the Authority and understands and agrees that the Authority will, in turn, report each violation as required to assure notification to FTA and the appropriate EPA Regional Office.

C. The Contractor also agrees to include the requirements of this Article in all subcontracts exceeding $100,000 issued pursuant to this Contract.

16. CLEAN AIR REQUIREMENTS – CONTRACTS EXCEEDING $100,000

A. The Contractor agrees to comply with all applicable standards, orders or regulations issued pursuant to the Clean Air Act, as amended, 42 USC §7401 et seq. The Contractor agrees to report each violation to the Authority and understands and agrees that the Authority will, in turn, report each violation as required to assure notification to FTA and the appropriate EPA Regional Office.

B. The Contractor also agrees to include the requirements of this Clause in all subcontracts exceeding $100,000 issued pursuant to this Contract.

17. FLY AMERICA

The Contractor agrees to comply with 49 U.S.C. 40118 (the "Fly America" Act) in accordance with the General Services Administration's regulations at 41 CFR Part 301-10, which provide that subrecipients of Federal funds and their contractors are required to use U.S. Flag air carriers for U.S Government-financed international air travel and transportation of their personal effects or property, to the extent such service is available, unless travel by foreign air carrier is a matter of necessity, as defined by the Fly America Act. The Contractor shall submit, if a foreign air carrier was used, an appropriate certification or memorandum adequately explaining why service by a U.S. flag air carrier was not available or why it was necessary to use a foreign air carrier and shall, in any event, provide a certificate of compliance with the Fly America requirements. The Contractor agrees to include the requirements of this section in all subcontracts that may involve international air transportation.

18. CONTRACTS INVOLVING FEDERAL PRIVACY ACT REQUIREMENTS

The following requirements apply to the Contractor and its employees that administer any system of records on behalf of the Federal Government under any contract:

A. The Contractor agrees to comply with, and assures the compliance of its employees with, the information restrictions and other applicable requirements of the Privacy Act of 1974, 5 U.S.C. § 552a. Among other things, the Contractor agrees to obtain the express consent of the Federal Government before the Contractor or its employees operate a system of records on behalf of the Federal Government. The Contractor understands that the requirements of the Privacy Act, including the civil and criminal penalties for violation of that Act, apply to those individuals involved, and that failure to comply with the terms of the Privacy Act may result in termination of the underlying contract.

B. The Contractor also agrees to include these requirements in each subcontract to administer any system of records on behalf of the Federal Government financed in whole or in part with Federal assistance provided by FTA.

19. PREFERENCE FOR RECYCLED PRODUCTS

The Contractor agrees to comply with all the requirements of Section 6002 of the Resource Conservation and Recovery Act (RCRA), as amended (42 U.S.C. 6962), including but not limited to the regulatory provisions of 40 CFR Part 247, and Executive Order 12873, as they apply to the procurement of the items designated in Subpart B of 40 CFR Part 247. The Contractor also agrees to include the requirements of this Clause in all subcontracts exceeding $10,000 for items designated by the Environmental Protection Agency (EPA) and issued pursuant to this Contract.

20. PROGRAM FRAUD AND FALSE OR FRAUDULENT STATEMENTS OR RELATED ACTS

A. The Contractor acknowledges that the provisions of the Program Fraud Civil Remedies Act of 1986, as amended, 31 U.S.C. § 3801 *et seq.* and U.S. DOT regulations, "Program Fraud Civil Remedies," 49 CFR Part 31, apply to its actions pertaining to this Project. The Contractor certifies or affirms the truthfulness and accuracy of any statement it has made, it makes, it may make, or causes to be made, pertaining to the contract or project. In addition to other penalties that may be applicable, the Contractor further acknowledges that if it makes, or causes to be made, a false, fictitious, or fraudulent claim, statement, submission, or certification, the Federal Government reserves the right to impose the

penalties of the Program Fraud Civil Remedies Act of 1986 on the Contractor to the extent the Federal Government deems appropriate.

B. The Contractor also acknowledges that if it makes, or causes to be made, a false, fictitious, or fraudulent claim, statement, submission, or certification to the Federal Government under this Contract, financed in whole or in part with Federal assistance, the Federal Government reserves the right to impose the penalties of 18 U.S.C. § 1001 and 49 U.S.C. § 5307(n)(1) on the Contractor, to the extent the Federal Government deems appropriate.

C. The Contractor agrees to include the above two clauses in each subcontract related to this Contract. It is further agreed that the clauses shall not be modified, except to identify the subcontractor who will be subject to the provisions.

21. TRANSIT EMPLOYEE PROTECTIVE REQUIREMENTS

To the extent that transit operations are involved, the Contractor agrees to carry out the transit operations work on the underlying contract in compliance with terms and conditions determined by the U.S. Secretary of Labor to be fair and equitable to protect the interests of employees employed under this Contract and to meet the employee protective requirements of 49 U.S.C. A 5333(b), and U.S. DOL guidelines at 29 C.F.R. Part 215, and any amendments thereto. These terms and conditions are identified in the letter of certification from the U.S. DOL to FTA applicable to the FTA Recipient's project from which Federal assistance is provided to support work on the underlying contract. The Contractor agrees to carry out that work in compliance with the conditions stated in that U.S. DOL letter. The requirements of this subsection (1), however, do not apply to any contract financed with Federal assistance provided by FTA either for projects for elderly individuals and individuals with disabilities authorized by 49 U.S.C. § 5310(a)(2), or for projects for nonurbanized areas authorized by 49 U.S.C. § 5311. Alternate provisions for those projects are set forth in subsections (b) and (c) of this clause.

22. ADA ACCESS REQUIREMENTS

Facilities to be used in public transportation service must comply with 42 U.S.C. Sections 12101 *et seq*. and DOT regulations, “Transportation Services for Individuals with Disabilities (ADA),” 49 CFR Part 37; and Joint ATBCB/DOT regulations, “Americans with Disabilities (ADA) Accessibility Specifications for Transportation Vehicles,” 36 CFR Part 1192 and 49 CFR Part 38.

23. BUY AMERICA

The contractor agrees to comply with 49 U.S.C. 5323(j) and 49 C.F.R. Part 661, which provide that Federal funds may not be obligated unless steel, iron, and manufactured products used in FTA-funded projects are produced in the United States, unless a waiver has been granted by FTA or the product is subject to a general waiver. General waivers are listed in 49 C.F.R. 661.7, and include final assembly in the United States. Separate requirements for rolling stock are set out at 49 U.S.C. 5323(j)(2)(C) and 49 C.F.R. 661.11. Rolling stock must be assembled in the United States and have a 60 percent domestic content.

The Contractor also agrees to include the requirements of this Clause in all subcontracts exceeding $100,000 issued pursuant to this Contract.

BUY AMERICA CERTIFICATION (NON- ROLLING STOCK)
Bid# 40929

A bidder or offeror must submit to the FTA recipient the Buy America certification (below) with all bids or offers on FTA-funded contracts, except those subject to a general waiver. Bids or offers that are not accompanied by a completed Buy America certification must be rejected as nonresponsive. This requirement does not apply to lower tier subcontractors.

CERTIFICATION REQUIREMENT FOR PROCUREMENT OF STEEL, IRON, OR MANUFACTURED PRODUCTS (NON- ROLLING STOCK) *Certificate of Compliance with 49 U.S.C. 5323(j)(1)*

The bidder or offeror hereby certifies that it will meet the requirements of 49 U.S.C. 5323(j)

(1) and the applicable regulations in 49 CFR Part 661.5.

Date _____

Signature_____

Company Name_____

Title _____

Certificate of Non-Compliance with 49 U.S.C. 5323(j)(1)

The bidder or offeror hereby certifies that it cannot comply with the requirements of 49 U.S.C. 5323(j)(1) and 49 C.F.R. 661.5, but it may qualify for an exception pursuant to 49 U.S.C. 5323(j)(2)(A), 5323(j)(2)(B), or 5323(j)(2)(D), and 49 C.F.R. 661.7.

Date _____

Signature _____

Company Name _____

Title _____

CERTIFICATION REGARDING LOBBYING PURSUANT TO 31 U.S.C. 1352

The undersigned

_____

(name of authorized officer)

certifies, to the best of my knowledge and belief, that:

- No Federal appropriated funds have been paid or will be paid, by or on behalf of the undersigned, to any person for influencing or attempting to influence an officer or employee of an agency, a Member of Congress, an officer or employee of Congress, or an employee of a Member of Congress in connection with the awarding of any Federal contract, the making of any Federal grant, the making of any Federal loan, the entering into of any cooperative agreement, and the extension, continuation, renewal, amendment, or modification of any Federal contract, grant, loan, or cooperative agreement.

- If any funds other than Federal appropriated funds have been paid or will be paid to any person for influencing or attempting to influence an officer or employee of any agency, a Member of Congress, an officer or employee of Congress, or an employee of a Member of Congress in connection with this Federal contract, grant, loan, or cooperative agreement, the undersigned shall complete and submit Standard Form LLL, "Disclosure of Lobbying, Activities" in accordance with its instructions.

- The undersigned shall require that the language of this certification be included in the award documents for all subawards at all tiers (including subcontracts, subgrants, and contracts under grants, loans, and cooperative agreements) and that all subrecipients shall certify and disclose accordingly.

This certification is a material representation of fact upon which reliance was placed when this transaction was made or entered into. Submission of this certification is a prerequisite for making or entering into this transaction imposed by, 31, U.S. C. § 1352 (as amended by the Lobbying Disclosure Act of 1995). Any person who fails to file the required certification shall be subject to a civil penalty of not less than $10,000 and not more than $100,000 for each such failure.

Note: Pursuant to 31 U.S.C § 1352(c)(I)-(2)(A), any person who makes a prohibited expenditure or fails to file or amend a required certification or disclosure form shall be subject to a civil penalty of not less than $10,000 and not more than $100,000 for each such expenditure or failure.

The Contractor certifies or affirms the truthfulness and accuracy of each statement of its certification and disclosure, if any. In addition, the Contractor understands and agrees that the provisions of 31 U.S.C. § 3801, et seq., apply to this certification and disclosure, if any.

Executed this day _____of _____, 201__

By:_____

Signature of Authorized Official

_____

Official Name and Title of Authorized Official

FTA REQUIREMENTS

STANDARD FORM LLL - DISCLOSURE OF LOBBYING ACTIVITIES

Complete this form to disclose lobbying activities pursuant to 31 U.S.C. 1352

1. Type of Federal Action: X a. contract ____ b. grant ____ c. cooperative agreement ____ d. loan ____ e. loan guarantee ____ f. loan insurance	**2. Status of Federal Action:** X a. bid/offer/application ____ b. initial award ____ c. post award	**3. Report Type:** X a. initial filing ____ b. material change **For material change only:** Year _____ quarter _____ Date of last report_____
4. Name and Address of Reporting Entity: X Prime _____ Subawardee Tier_____, if Known: **Congressional District,** *if known*:	**5. If Reporting Entity in No. 4 is Subawardee,** Enter Name and Address of Prime: **Congressional District,** *if known*:	
6. Federal Department/Agency:	**7. Federal Program Name/Description:** CFDA Number, *if applicable*: _____	
8. Federal Action Number, *if known:*	**9. Award Amount**, *if known:* **$**	
10. a. Name and Address of Lobbying Registrant *(if individual, last name, first name, MI):*	**b. Individuals Performing Services** *(including address if different from No. 10a)* *(last name, first name, MI):*	
11. Information requested through this form is authorized by title 31 U.S.C. section 1352. This disclosure of lobbying activities is a material representation of fact upon which reliance was placed by the tier above when this transaction was made or entered into. This disclosure is required pursuant to 31 U.S.C. 1352. This information will be reported to the Congress semi-annually and will be available for public inspection. Any person who fails to file the required disclosure shall be subject to a civil penalty of not less than $10,000 and not more than $100,000 for each such failure.	**Signature:** _____ **Print Name:** _____ **Title:** _____ **Telephone No.:** _____ **Date:** _____	
Federal Use Only	**Authorized for Local Reproduction** **Standard Form - LLL (Rev. 7-97)**	

INSTRUCTIONS FOR COMPLETION OF SF-LLL, DISCLOSURE OF LOBBYING ACTIVITIES

This disclosure form shall be completed by the reporting entity, whether subawardee or prime Federal recipient, at the initiation or receipt of a covered Federal action, or a material change to a previous filing, pursuant to title 31 U.S.C. Section 1352. The filing of a form is required for each payment or agreement to make payment to any lobbying entity for influencing or attempting to influence an officer or employee of any agency, a Member of Congress, an officer or employee of Congress, or an employee of a Member of Congress in connection with a covered Federal action. Complete all items that apply for both the initial filing and material change report. Refer to the implementing guidance published by the Office of Management and Budget for additional information.

1. Identify the type of covered Federal action for which lobbying activity is and/or has been secured to influence the outcome of a covered Federal action.
2. Identify the status of the covered Federal action.
3. Identify the appropriate classification of this report. If this is a followup report caused by a material change to the information previously reported, enter the year and quarter in which the change occurred. Enter the date of the last previously submitted report by this reporting entity for this covered Federal action.
4. Enter the full name, address, city, State and zip code of the reporting entity. Include Congressional District, if known. Check the appropriate classification of the reporting entity that designates if it is, or expects to be, a prime or subaward recipient. Identify the tier of the subawardee, e.g., the first subawardee of the prime is the 1st tier. Subawards include but are not limited to subcontracts, subgrants and contract awards under grants.
5. If the organization filing the report in item 4 checks "Subawardee," then enter the full name, address, city, State and zip code of the prime Federal recipient. Include Congressional District, if known.
6. Enter the name of the federal agency making the award or loan commitment. Include at least one organizational level below agency name, if known. For example, Department of Transportation, United States Coast Guard.
7. Enter the Federal program name or description for the covered Federal action (item 1). If known, enter the full Catalog of Federal Domestic Assistance (CFDA) number for grants, cooperative agreements, loans, and loan commitments.
8. Enter the most appropriate Federal identifying number available for the Federal action identified in item 1 (e.g., Request for Proposal (RFP) number; Invitations for Bid (IFB) number; grant announcement number; the contract, grant, or loan award number; the application/proposal control number assigned by the Federal agency). Included prefixes, e.g., "RFP-DE-90-001."
9. For a covered Federal action where there has been an award or loan commitment by the Federal agency, enter the Federal amount of the award/loan commitment for the prime entity identified in item 4 or 5.
10. (a) Enter the full name, address, city, State and zip code of the lobbying registrant under the Lobbying Disclosure Act of 1995 engaged by the reporting entity identified in item 4 to influence the covered Federal action.

    (b) Enter the full names of the individual(s) performing services, and include full address if different from 10(a). Enter Last Name, First Name, and Middle Initial (MI).
11. The certifying official shall sign and date the form, print his/her name, title, and telephone number.

FTA REQUIREMENTS

According to the Paperwork Reduction Act, as amended, no persons are required to respond to a collection of information unless it displays a valid OMB control Number. The valid OMB control number for this information collection is OMB No. 0348-0046. Public reporting burden for this collection of information is estimated to average 10 minutes per response, including time for reviewing instructions, searching existing data sources, gathering and maintaining the data needed, and completing and reviewing the collection of information. Send comments regarding the burden estimate or any other aspect of this collection of information, including suggestions for reducing this burden, to the Office of Management and Budget, Paperwork Reduction Project (0348-0046), Washington, DC 20503

CERTIFICATION REGARDING DEBARMENT, SUSPENSION, INELIGIBILITY AND VOLUNTARY EXCLUSION - LOWER TIER COVERED TRANSACTIONS

1. The prospective lower tier participant,

_____, certifies by submission of this bid or proposal, that neither it nor its principals are presently debarred, suspended, proposed for debarment, declared ineligible, or voluntarily excluded from participation in this transaction by any Federal department or agency.

2. Where the prospective lower tier participant is unable to certify to any of the statements in this certification, such prospective participant shall attach an explanation to this proposal.

3. The prospective lower tier participant shall provide immediate written notice to the Authority (and the Contractor, if applicable) if at any time the prospective lower tier participant learns that its certification was erroneous when submitted or has become erroneous by reason of changed circumstances.

Executed this day _____ of _____, 201_____.

_____

BY SIGNATURE OF AUTHORIZED OFFICIAL

_____

NAME AND TITLE OF AUTHORIZED OFFICIAL

INSTRUCTIONS FOR COMPLETION OF CERTIFICATION REGARDING DEBARMENT, SUSPENSION, INELIGIBILITY AND VOLUNTARY EXCLUSION -LOWER TIER COVERED TRANSACTIONS

1. By signing and submitting this Proposal, the prospective lower tier participant is providing the signed certification set out on the previous page.

2. This certification is a material representation of fact upon which reliance was placed when this transaction was entered into. If it is later determined that the prospective lower tier participant knowingly rendered an erroneous certification, in addition to other remedies available to the Federal Government, the Authority may pursue available remedies, including suspension and/or debarment.

3. The prospective lower tier participant shall provide immediate written notice to the Authority if at any time the prospective lower tier participant learns that its certification was erroneous when submitted or has become erroneous by reason of changed circumstances.

4. The terms “covered transaction,” “debarred,” “suspended,” “ineligible,” “lower tier covered transaction,” “participant,” “persons,” “lower tier covered transaction,” “principal,” “proposal,” and “voluntarily excluded,” as used in this clause, have the meanings set out in the Definitions and Coverage sections of rules implementing Executive Order 12549 [49 CFR Part 29]. The Proposer may contact the Procurement Representative for assistance in obtaining a copy of those regulations.

5. The prospective lower tier participant agrees by submitting this proposal that, should the proposed covered transaction be entered into, it shall not knowingly enter into any lower tier covered transaction with a person who is debarred, suspended, declared ineligible, or voluntarily excluded from participation in this covered transaction, unless authorized in writing by the Authority.

6. The prospective lower tier participant further agrees by submitting this proposal that it will include the “Certification Regarding Debarment, Suspension, Ineligibility and Voluntary Exclusion - Lower Tier Covered Transaction,” without modification, in all lower tier covered transactions and in all solicitations for lower tier covered transactions.

7. A participant in a covered transaction may rely upon a certification of a prospective participant in a lower tier covered transaction that it is not debarred, suspended, ineligible, or voluntarily excluded from the covered transaction, unless it knows that the certification is erroneous. A participant may decide the method and frequency by which it determines the eligibility of its principals. Each participant may, but is not required to, check the Nonprocurement List issued by U.S. General Service Administration.

8. Nothing contained in the foregoing shall be construed to require establishment of system of records in order to render in good faith the certification required by this clause. The knowledge and information of a participant is not required to exceed that which is normally possessed by a prudent person in the ordinary course of business dealings.

9. Except for transactions authorized under sub-paragraph 5 of these instructions, if a participant in a covered transaction knowingly enters into a lower tier covered transaction with a person who is suspended, debarred, ineligible, or voluntarily excluded from participation in this transaction, in addition to all remedies available to the Federal Government, the Authority may pursue available remedies including suspension and/or debarment.

END OF FTA CONTRACT PROVISIONS

STANDARD CONTRACT TERMS AND CONDITIONS

PART I GENERAL DEFINITIONS **3**

PART II GENERAL PROVISIONS **4**

1. Facility Rules and Regulations of PATH 4
2. Contractor Not An Agent 4
3. Contractor's Warranties 4
4. Personal Non-Liability 5
5. Equal Employment Opportunity, Affirmative Action, Non-Discrimination 5
6. Rights and Remedies of PATH 6
7. Rights and Remedies of the Contractor 6
8. Submission To Jurisdiction 6
9. Harmony 6
10. Claims of Third Persons 7
11. No Third Party Rights 7
12. Provisions of Law Deemed Inserted 7
13. Costs Assumed By The Contractor 7
14. Default, Revocation or Suspension of Contract 8
15. Sales or Compensating Use Taxes 11
16. No Estoppel or Waiver 11
17. Records and Reports 11
18. General Obligations 12
19. Assignments and Subcontracting 13
20. Indemnification and Risks Assumed By The Contractor 14
21. Approval of Methods 15
22. Safety and Cleanliness 15
23. Accident Reports 15
24. Trash Removal 15
25. Lost and Found Property 15
26. Property of the Contractor 16
27. Modification of Contract 16
28. Invalid Clauses 16
29. Approval of Materials, Supplies and Equipment 16
30. Intellectual Property 16
31. Contract Records and Documents – Passwords and Codes 17
32. Designated Secure Areas 17
33. Notification of Security Requirements 18
34. Construction In Progress 20
35. Permit-Required Confined Space Work 20
36. Signs 20
37. Vending Machines, Food Preparation 20
38. Confidential Information/Non-Publication 20
39. Time is of the Essence 21
40. Holidays 21
41. Personnel Standards 22
42. General Uniform Requirements for Contractor’s Personnel 22
43. Labor, Equipment and Materials Supplied by the Contractor 22

44. Contractor's Vehicles – Parking - Licenses 23
45. Superintendent/Manager's Authority 23

PART III CONTRACTOR'S INTEGRITY PROVISIONS 23
1. Certification of No Investigation (criminal or civil anti-trust), Indictment, Conviction, Debarment, Suspension, Disqualification and Disclosure of Other Information 23
2. Non-Collusive Bidding, and Code of Ethics Certification, Certification of No Solicitation Based On Commission, Percentage, Brokerage, Contingent or Other Fees 24
3. Bidder Eligibility for Award of Contracts - Determination by an Agency of the State of New York or New Jersey Concerning Eligibility to Receive Public Contracts 25
4. Contractor Responsibility, Suspension of Work and Termination 26
5. No Gifts, Gratuities, Offers of Employment, Etc. 26
6. Conflict of Interest 27
7. Definitions 27

STANDARD CONTRACT TERMS AND CONDITIONS

PART I GENERAL DEFINITIONS

To avoid undue repetition, the following terms, as used in this Agreement, shall be construed as follows:

Authority or Port Authority - shall mean the Port Authority of New York and New Jersey.

PATH – shall mean the Port Authority Trans-Hudson Corporation.

Contract, Document or Agreement - shall mean the writings setting forth the scope, terms, conditions and Specifications for the procurement of Goods and/or Services, as defined hereunder and shall include, but not be limited to: Invitation for Bid (IFB), Request for Quotation (RFQ), Request for Proposal (RFP), Purchase Order (PO), Cover Sheet, executed Signature Sheet, AND PRICING SHEETS with Contract prices inserted," "STANDARD CONTRACT TERMS AND CONDITIONS," and, if included, attachments, endorsements, schedules, exhibits, or drawings, the Authority's acceptance and any written addenda issued over the name of the Authority's Manager, Purchasing Services Division.

Days or Calendar Days - shall mean consecutive calendar days, Saturdays, Sundays, and holidays, included.

Week - unless otherwise specified, shall mean seven (7) consecutive calendar days, Saturdays, Sundays, and holidays.

Month – unless otherwise specified, shall mean a calendar month.

Director/General Manager – shall mean the Director/General Manager of PATH which operates the facility of PATH at which the services hereunder are to be performed, for the time being, or his/her successor in duties for the purpose of this Contract, acting personally or through one of his/her authorized representatives for the purpose of this Contract.

Superintendent/Manager – shall mean the Superintendent/Manager of the PATH Division responsible for operating the said Facility for the time being or his/her successor in duties for the purpose of this Contract, acting personally or through his/her duly authorized representative for the purpose of this Contract.

No person shall be deemed a representative of the Director/General Manager or Superintendent/Manager except to the extent specifically authorized in an express written notice to the Contractor signed by the Director/General Manager or Superintendent/Manager as the case may be. Further, no person shall be deemed a successor in duties of the Director/General Manager unless the Contractor is so notified in writing signed by the Authority's Manager, Purchasing Services Division. No person shall be deemed a successor in duties of the Superintendent/Manager unless the Contractor is so notified in a writing signed by the Director/General Manager.

Site of the Work - or words of similar import shall mean the Facility and all buildings and properties associated therewith as described in this Contract.

Small Business Enterprise (SBE) - The criteria for a Small Business Enterprise are:

- The principal place of business must be located in New York or New Jersey;
- The firm must have been in business for at least three years with activity;
- Average gross income limitations by industry as established by the Port Authority.

Subcontractor - shall mean anyone who performs work (other than or in addition to the furnishing of materials, plant or equipment) in connection with the services to be provided hereunder, directly or indirectly for or on behalf of the Contractor (and whether or not in privity of contract with the Contractor), but shall not include any person who furnished merely his own personal labor or his own personal services. "Subcontractor", however, shall exclude the Contractor or any subsidiary or parent of the Contractor or any person, firm or corporation which has a substantial interest in the Contractor or in which the Contractor or the parent or the subsidiary of the Contractor, or an officer or principal of the Contractor or of the parent of the subsidiary of the Contractor has a substantial interest, provided, however, that for the purpose of the clause hereof entitled "Assignments and Subcontracts" the exclusion in this paragraph shall not apply to anyone but the Contractor itself.

Women-Owned Business Enterprise (WBE) - shall mean a business enterprise which is at least 51% owned by one or more women, or, in the case of a publicly held corporation, at least 51% of the stock of which is owned by one or more women and whose management and daily business operations are controlled by one or more women who are citizens or permanent or resident aliens.

Work - shall mean all services, equipment and materials (including materials and equipment, if any, furnished by the Authority) and other facilities and all other things necessary or proper for, or incidental to the services to be performed or goods to be furnished in connection with the service to be provided hereunder.

PART II GENERAL PROVISIONS

1. Facility Rules and Regulations of PATH

a. The Contractor shall observe and obey (and compel its officers, employees, guests, invitees, and those doing business with it, to observe and obey) the facility Rules and Regulations of PATH now in effect, and such further reasonable Rules and Regulations which may from time to time during the term of this Agreement be promulgated by PATH for reasons of safety, health, preservation of property or maintenance of a good and orderly appearance and efficient operation of the Facility. PATH agrees that, except in case of emergency, it shall give notice to the Contractor of every Rule and Regulation hereafter adopted by it at least five days before the Contractor shall be required to comply therewith.
b. A copy of the facility Rules and Regulations of PATH shall be available for review by the Contractor at the Office of the Director/General Manager of PATH.

2. Contractor Not An Agent

This Agreement does not constitute the Contractor the agent or representative of PATH or the Port Authority, for any purpose whatsoever except as may be specifically provided in this Agreement. It is hereby specifically acknowledged and understood that the Contractor, in performing its services hereunder, is and shall be at all times an independent Contractor and the officers, agents and employees of the Contractor shall not be or be deemed to be agents, servants or employees of PATH or the Port Authority.

3. Contractor's Warranties

The Contractor represents and warrants:

a. That it is financially solvent, that it is experienced in and competent to perform the requirements of this Contract, that the facts stated or shown in any papers submitted or referred to in connection with the solicitation are true, and, if the Contractor be a corporation, that it is authorized to perform this Contract;
b. That it has carefully examined and analyzed the provisions and requirements of this Contract, and that from its own investigations it has satisfied itself as to the nature of all things needed for the performance of this Contract, the general and local conditions and all other matters which in any way affect this Contract or its performance, and that the time available to it for such examination, analysis, inspection and investigation was adequate;
c. That the Contract is feasible of performance in accordance with all its provisions and requirements and that it can and will perform it in strict accordance with such provisions and requirements;

d. That no Director, officer, agent or employee of PATH is personally interested directly or indirectly in this Contract or the compensation to be paid hereunder and that no Commissioner, officer, agent or employee of the Port Authority is personally interested directly or indirectly in this Contract or the compensation to be paid hereunder;
e. That, except only for those representations, statements or promises expressly contained in this Contract, no representation, statement or promise, oral or in writing, of any kind whatsoever by the Port Authority, PATH, their Directors, Commissioners, officers, agents, employees or consultants has induced the Contractor to enter into this Contract or has been relied upon by the Contractor, including any with reference to: (1) the meaning, correctness, suitability, or completeness of any provisions or requirements of this Contract; (2) the nature, quantity, quality or size of the materials, equipment, labor and other facilities needed for the performance of this Contract; (3) the general or local conditions which may in any way affect this Contract or its performance; (4) the price of the Contract; or (5) any other matters, whether similar to or different from those referred to in (1) through (4) immediately above, affecting or having any connection with this Contract, the bidding thereon, any discussions thereof, the performance thereof or those employed therein or connected or concerned therewith.

Moreover, the Contractor accepts the conditions at the Site of the Work as they may eventually be found to exist and warrants and represents that it can and will perform the Contract under such conditions and that all materials, equipment, labor and other facilities required because of any unforeseen conditions (physical or otherwise) shall be wholly at its own cost and expense, anything in this Contract to the contrary notwithstanding.

Nothing in the Specifications or any other part of the Contract is intended as or shall constitute a representation by PATH as to the feasibility of performance of this Contract or any part thereof.

The Contractor further represents and warrants that it was given ample opportunity and time and by means of this paragraph was requested by the Port Authority and PATH to review thoroughly all documents forming this Contract prior to opening of Bids on this Contract in order that it might request inclusion in this Contract of any statement, representation, promise or provision which it desired or on which it wished to place reliance; that it did so review said documents, that either every such statement, representation, promise or provision has been included in this Contract or else, if omitted, that it expressly relinquishes the benefit of any such omitted statement, representation, promise or provision and is willing to perform this Contract without claiming reliance thereon or making any other claim on account of such omission.

The Contractor further recognizes that the provisions of this numbered clause (though not only such provisions) are essential to PATH's consent to enter into this Contract and that without such provisions, PATH would not have entered into this Contract.

4. Personal Non-Liability

Neither the Directors of PATH, the Commissioners of the Port Authority nor any of them, nor any officer, agent or employee of PATH or the Port Authority, shall be charged personally by the Contractor with any liability, or held personally liable to the Contractor under any term or provision of this Agreement, or because of its execution or attempted execution, or because of any breach, or attempted or alleged breach, thereof.

5. Equal Employment Opportunity, Affirmative Action, Non-Discrimination

a. The Contractor is advised to ascertain and comply with all applicable federal, State and local statutes, ordinances, rules and regulations and, federal Executive Orders, pertaining to equal employment opportunity, affirmative action, and non-discrimination in employment.
b. Without limiting the generality of any other term or provision of this Contract, in the event of the Contractor's non-compliance with the equal opportunity and non-discrimination clause of this Contract, or with any of such statutes, ordinances, rules, regulations or Orders, this Contract may be cancelled,

terminated or suspended in whole or in part.

6. Rights and Remedies of PATH

PATH shall have the following rights in the event the Contractor is deemed guilty of a breach of any term whatsoever of this Contract:

a. The right to take over and complete the Work or any part thereof as agent for and at the expense of the Contractor, either directly or through others.
b. The right to cancel this Contract as to any or all of the Work yet to be performed.
c. The right to specific performance, an injunction or any appropriate equitable remedy.
d. The right to money damages.

For the purpose of this Contract, breach shall include but not be limited to the following, whether or not the time has yet arrived for performance of an obligation under this Contract: a statement by the Contractor to any representative of PATH indicating that the Contractor cannot or will not perform any one or more of its obligations under this Contract; any act or omission of the Contractor or any other occurrence which makes it improbable at the time that it will be able to perform any one or more of its obligations under this Contract; any suspension of or failure to proceed with any part of the Work by the Contractor which makes it improbable at the time that it will be able to perform any one or more of its obligations under this Contract.

The enumeration in this numbered clause or elsewhere in this Contract of specific rights and remedies of PATH shall not be deemed to limit any other rights or remedies which PATH would have in the absence of such enumeration; and no exercise by PATH of any right or remedy shall operate as a waiver of any other of its rights or remedies not inconsistent therewith or to estop it from exercising such other rights or remedies.

7. Rights and Remedies of the Contractor

Inasmuch as the Contractor can be adequately compensated by money damages for any breach of this Contract which may be committed by PATH, the Contractor expressly agrees that no default, act or omission of PATH shall constitute a material breach of this Contract, entitling the Contractor to cancel or rescind this Contract or to suspend or abandon performance.

8. Submission To Jurisdiction

The Contractor hereby irrevocably submits itself to the jurisdiction of the Courts of the State of New York and New Jersey, in regard to any controversy arising out of, connected with, or in any way concerning this Contract.

The Contractor agrees that the service of process on the Contractor in relation to such jurisdiction may be made, at the option of PATH, either by registered or certified mail addressed to it at the address of the Contractor indicated on the signature sheet, or by actual personal delivery to the Contractor, if the Contractor is an individual, to any partner if the Contractor be a partnership or to any officer, director or managing or general agent if the Contractor be a corporation.

Such service shall be deemed to be sufficient when jurisdiction would not lie because of the lack of basis to serve process in the manner otherwise provided by law. In any case, however, process may be served as stated above whether or not it might otherwise have been served in a different manner.

9. Harmony

a. The Contractor shall not employ any persons or use any labor, or use or have any equipment, or permit any condition to exist which shall or may cause or be conducive to any labor complaints, troubles, disputes or controversies at the Facility which interfere or are likely to interfere with the operation of

PATH or with the operations of lessees, licensees or other users of the Facility or with the operations of the Contractor under this Contract.

The Contractor shall immediately give notice to the Port Authority (to be followed by written notices and reports) of any and all impending or existing labor complaints, troubles, disputes or controversies and the progress thereof. The Contractor shall use its best efforts to resolve any such complaint, trouble, dispute or controversy. If any type of strike, boycott, picketing, work stoppage, slowdown or other labor activity is directed against the Contractor at the Facility or against any operations of the Contractor under this Contract, whether or not caused by the employees of the Contractor, and if any of the foregoing, in the opinion of PATH, results or is likely to result in any curtailment or diminution of the services to be performed hereunder or to interfere with or affect the operations of PATH, or to interfere with or affect the operations of lessees, licensees, or other users of the Facility or in the event of any other cessation or stoppage of operations by the Contractor hereunder for any reason whatsoever, PATH shall have the right at any time during the continuance thereof to suspend the operations of the Contractor under this Contract, and during the period of the suspension the Contractor shall not perform its services hereunder and the Port Authority shall have the right during said period to itself or by any third person or persons selected by it to perform said services of the Contractor using the equipment which is used by the Contractor in its operations hereunder as PATH deems necessary and without cost to PATH. During such time of suspension, the Contractor shall not be entitled to any compensation. Any flat fees, including management fees, shall be prorated. Prior to the exercise of such right by PATH, it shall give the Contractor notice thereof, which notice may be oral. No exercise by PATH of the rights granted to it in the above subparagraph shall be or be deemed to be a waiver of any rights of termination or revocation contained in this Contract or a waiver of any rights or remedies which may be available to PATH under this Contract or otherwise.

b. During the time that the Contractor is performing the Contract, other persons may be engaged in other operations on or about the worksite including Facility operations, pedestrian, bus and vehicular traffic and other Contractors performing at the worksite, all of which shall remain uninterrupted.

The Contractor shall so plan and conduct its operations as to work in harmony with others engaged at the site and not to delay, endanger or interfere with the operation of others (whether or not specifically mentioned above), all to the best interests of PATH and the public as may be directed by PATH.

10. Claims of Third Persons

The Contractor undertakes to pay all claims lawfully made against it by subcontractors, suppliers and workers, and all claims lawfully made against it by other third persons arising out of or in connection with or because of the performance of this Contract and to cause all subcontractors to pay all such claims lawfully made against them.

11. No Third Party Rights

Nothing contained in this Contract is intended for the benefit of third persons, except to the extent that the Contract specifically provides otherwise by use of the words "benefit" or "direct right of action."

12. Provisions of Law Deemed Inserted

Each and every provision of law and clause required by law to be inserted in this Contract shall be deemed to be inserted herein and the Contract shall be read and enforced as though it were included therein, and if through mistake or otherwise any such provision is not inserted, or is not correctly inserted, then upon the application of either party, the Contract shall forthwith be physically amended to make such insertion.

13. Costs Assumed By The Contractor

It is expressly understood and agreed that all costs of the Contractor of whatever kind or nature and whether imposed directly upon the Contractor under the terms and provisions hereof or in any other manner

whatsoever because of the requirements of the operation of the service or otherwise under this Agreement shall be borne by the Contractor or without compensation or reimbursement from PATH, except as specifically set forth in this Agreement. The entire and complete cost and expense of the Contractor's services and operations hereunder shall be borne solely by the Contractor and under no circumstances shall PATH be liable to any third party (including the Contractor's employees) for any such costs and expenses incurred by the Contractor and under no circumstances shall PATH be liable to the Contractor for the same, except as specifically set forth in this Section.

14. Default, Revocation or Suspension of Contract

a. If one or more of the following events shall occur:

1. If fire or other cause shall destroy all or a substantial part of the Facility.

2. If any governmental agency shall condemn or take a temporary or permanent interest in all or a substantial part of the Facility, or all of a part of PATH's interest herein;

then upon the occurrence of such event or at any time thereafter during the continuance thereof, PATH shall have the right on twenty-four (24) hours written notice to the Contractor to revoke this Contract, such revocation to be effective upon the date and time specified in such notice.

In such event this Contract shall cease and expire on the effective date of revocation as if said date were the date of the expiration of this Contract. Such revocation shall not, however, relieve the Contractor of any liabilities or obligations hereunder which shall have accrued on or prior to the effective date of revocation.

b. If one or more of the following events shall occur:

1. The Contractor shall become insolvent, or shall take the benefit of any present or future insolvency statute, or shall make a general assignment for the benefit of creditors, or file a voluntary petition in bankruptcy or a petition or answer seeking an arrangement or its reorganization or the readjustment of its indebtedness under the federal bankruptcy laws or under any other law or statute of the United States or of any State thereof, or consent to the appointment of a receiver, trustee, or liquidator of all or substantially all its property; or
2. By order or decree of a court the Contractor shall be adjudged bankrupt or an order shall be made approving a petition filed by any of the creditors, or, if the Contractor is a corporation, by any of the stockholders of the Contractor, seeking its reorganization or the readjustment of its indebtedness under the federal bankruptcy laws or under any law or statute of the United States or of any State thereof; or
3. A petition under any part of the federal bankruptcy laws or an action under any present or future insolvency law or statute shall be filed against the Contractor and shall not be dismissed within thirty (30) days after the filing thereof; or
4. The interest of the Contractor under this Contract shall be transferred to, passed to or devolve upon, by operation of law or otherwise, any other person, firm or corporation, or
5. The Contractor, if a corporation, shall, without the prior written approval of the Port Authority, become a surviving or merged corporation in a merger, a constituent corporation in a consolidation, or a corporation in dissolution; or
6. If the Contractor is a partnership, and the said partnership shall be dissolved as the result of any act or omission of its copartners or any of them, or by operation of law or the order or decree of any court having jurisdiction, or for any other reason whatsoever; or
7. By or pursuant to, or under authority of any legislative act, resolution or rule, or any order or decree of any court or governmental board, agency or officer having jurisdiction, a receiver, trustee, or liquidator shall take possession or control of all or substantially all of the property

of the Contractor and such possession or control of all or substantially all of the property of the Contractor and shall continue in effect for a period of fifteen (15) days;

then upon the occurrence of any such event or at any time thereafter during the continuance thereof, the PATH shall have the right upon five (5) days notice to the Contractor to terminate this Contract and the rights of the Contractor hereunder; termination to be effective upon the date and time specified in such notice as if said date were the date of the expiration of this Contract. Termination shall not relieve the Contractor of any liabilities or obligations hereunder which have accrued on or prior to the effective date of termination.

c. If any of the following shall occur:

1. The Contractor shall cease, abandon any part of the service, desert, stop or discontinue its services in the premises for any reason whatsoever and regardless of the fault of the Contractor; or

2. The Contractor shall fail to keep, perform and observe each and every other promise, covenant and agreement set forth in this Contract on its part to be kept, performed or observed, within five (5) days after receipt of notice of default thereunder from PATH or the Port Authority on behalf of PATH (except where fulfillment of its obligations requires activity over a greater period of time, and the Contractor shall have commenced to perform whatever may be required for fulfillment within five (5) days after receipt of notice and continues such performance without interruption except for causes beyond its control);

then upon the occurrence of any such event or during the continuance thereof, PATH shall have the right on twenty four (24) hours notice to the Contractor to terminate this Contract and the rights of the Contractor hereunder, termination to be effective upon the date and time specified in such notice. Termination shall not relieve the Contractor of any liabilities which shall have accrued on or prior to the effective date of termination.

d. If any of the events enumerated in this Section shall occur prior to commencement date of this Contract PATH upon the occurrence of any such event or any time thereafter during the continuance thereof by twenty-four (24) hours notice may terminate or suspend this Contract and the rights of the Contractor hereunder, such termination or suspension to be effective upon the date specified in such notice.

e. No payment by PATH of any monies to the Contractor for any period or periods after default of any of the terms, covenants or conditions hereof to be performed, kept and observed by the Contractor and no act or thing done or omitted to be done by PATH shall be deemed to be a waiver of the right of PATH to terminate this Contract or of any other right or remedies to which PATH may be entitled because of any breach thereof. No waiver by PATH of any default on the part of the Contractor in the performance of any of the terms, covenants and conditions hereof to be performed, kept or observed by the Contractor shall be or be construed to be a waiver by PATH of any other subsequent default in the performance of any of the said terms, covenants and conditions.

f. In addition to all other rights of revocation or termination hereunder and notwithstanding any other provision of this Contract PATH may terminate this Contract and the rights of the Contractor hereunder without cause at any time upon five (5) days written notice to the Contractor and in such event this Contract shall cease and expire on the date set forth in the notice of termination as fully and completely as though such dates were the original expiration date hereof and if such effective date of termination is other than the last day of the month, the amount of the compensation due to the Contractor from PATH shall be prorated when applicable on a daily basis. Such cancellation shall be without prejudice to the rights and obligations of the parties arising out of portions already

performed but no allowance shall be made for anticipated profits.

g. Any right of termination contained in this paragraph, shall be in addition to and not in lieu of any and all rights and remedies that PATH shall have at law or in equity consequent upon the Contractor's breach of this Contract and shall be without prejudice to any and all such other rights and remedies. It is hereby specifically agreed and understood that the exercise by the Port Authority of any right of termination set forth in this paragraph shall not be or be deemed to be an exercise by the Port Authority of an election of remedies so as to preclude PATH from any right to money damages it may have for the period prior to the effective date of termination to the original expiration date of the Contract, and this provision shall be deemed to survive the termination of this Contract as aforesaid.

h. If (1) the Contractor fails to perform any of its obligations under this Contract or any other agreement between PATH or the Port Authority and the Contractor (including its obligation to PATH or the Port Authority to pay any claim lawfully made against it by any supplier, subcontractor or worker or other person which arises out of or in connection with the performance of this Contract or any other agreement with PATH or the Port Authority) or (2) any claim (just or unjust) which arises out of or in connection with this Contract or any other agreement between PATH or the Port Authority and the Contractor is made against the Port Authority or PATH or (3) any subcontractor under this Contract or any other agreement between PATH or the Port Authority and the Contractor fails to pay any claims lawfully made against it by any supplier, subcontractor, worker or other third person which arises out of or in connection with this Contract or any other agreement between PATH or the Port Authority and the Contractor or if in the opinion of PATH or the Port Authority any of the aforesaid contingencies is likely to arise, then the Port Authority or PATH, as applicable, shall have the right, in its discretion, to withhold out of any payment (final or otherwise) such sums as PATH may deem ample to protect it against delay or loss or to assure the payment of just claims of third persons, and to apply such sums in such manner as PATH may deem proper to secure such protection or satisfy such claims. All sums so applied shall be deducted from the Contractor's compensation. Omission by PATH to withhold out of any payment, final or otherwise, a sum for any of the above contingencies, even though such contingency has occurred at the time of such payment, shall not be deemed to indicate that PATH does not intend to exercise its right with respect to such contingency. Neither the above provisions for rights of PATH to withhold and apply monies nor any exercise or attempted exercise of, or omission to exercise, such rights by PATH shall create any obligation of any kind to such supplier, subcontractors, worker or other third persons. If, however, the payment of any amount due the Contractor shall be improperly delayed, PATH shall pay the Contractor interest thereon at the rate of 6% per annum for the period of the delay, it being agreed that such interest shall be in lieu of and in liquidation of any damages to the Contractor because of such delay.

i. If PATH has paid any sum or has incurred any obligation or expense which the Contractor has agreed to pay or reimburse PATH, or if PATH is required or elects to pay any sum or sums or incurs any obligations or expense by reason of the failure, neglect or refusal of the Contractor to perform or fulfill any one or more of the conditions, covenants, or agreements contained in this Contract, or as a result of an act of omission of the Contractor contrary to the said conditions, covenants and agreements, the Contractor shall pay to PATH the sum or sums so paid or expense so incurred, including all interests, costs and damages, promptly upon the receipt of PATH’s statement therefore. PATH may, however, in its discretion, elect to deduct said sum or sums from any payment payable by it to the Contractor.

j. If PATH pays any installment to the Contractor without reducing said installment as provided in this Contract, it may reduce any succeeding installment by the proper amount, or it may bill the Contractor for the amount by which the installment paid should have been reduced and the

Contractor shall pay to PATH any such amount promptly upon receipt of PATH's statement therefore.

k. PATH shall also have the rights set forth above in the event the Contractor shall become insolvent or bankrupt or if his affairs are placed in the hands of a receiver, trustee or assignee for the benefit of creditors.

15. Sales or Compensating Use Taxes

Purchases of services and tangible personal property by PATH in the States of New York and New Jersey are generally exempt from state and local sales and compensating use taxes, and from most federal excises (Taxes). Therefore, PATH's purchase of the Contractor's services under this Contract is exempt from Taxes. Accordingly, the Contractor must not include Taxes in the price charged to PATH for the Contractor's services under this Contract**.** The Contractor certifies that there are no such taxes included in the prices for this Contract. The Contractor shall retain a copy of this Contract to substantiate the exempt sale.

The compensation set forth in this Agreement is the complete compensation to the Contractor, and PATH will not separately reimburse the Contractor for any taxes unless specifically set forth in this Agreement.

16. No Estoppel or Waiver

PATH shall not be precluded or estopped by any payment, final or otherwise, issued or made under this Contract, from showing at any time the true amount and character of the services performed, or from showing that any such payment is incorrect or was improperly issued or made; and PATH shall not be precluded or estopped, notwithstanding any such payment, from recovering from the Contractor any damages which it may sustain by reason of any failure on its part to comply strictly with this Contract, and any moneys which may be paid to it or for its account in excess of those to which it is lawfully entitled.

No cancellation, rescission or annulment hereof, in whole or as to any part of the services to be provided hereunder, or because of any breach hereof, shall be deemed a waiver of any money damages to which PATH may be entitled because of such breach. Moreover, no waiver by the Authority of any breach of this Contract shall be deemed to be a waiver of any other or any subsequent breach.

17. Records and Reports

The Contractor shall set up, keep and maintain (and shall cause its subcontractors to set up, keep and maintain) in accordance with generally accepted accounting practice during the term of this Agreement and any extensions thereof and for three years after the expiration, termination or revocation thereof, records, payroll records and books of account (including, but not limited to, records of original entry and daily forms, payroll runs, cancelled checks, time records, union agreements, contracts with health, pension and other third party benefit providers) recording all transactions of the Contractor(and its subcontractors), at, through or in any way connected with or related to the operations of the Contractor (and its subcontractors) hereunder, including but not limited to all matters relating to the charges payable to the Contractor hereunder, all wages and supplemental benefits paid or provided to or for its employees (and its subcontractors' employees) and such additional information as PATH may from time to time and at any time require, and also including, if appropriate, recording the actual number of hours of service provided under the Contract, and keeping separate records thereof which records and books of account shall be kept at all times within the Port District. The Contractor shall permit (and cause its subcontractors to permit) in ordinary business hours during the term of this Agreement including any extensions thereof and for three years thereafter the examination and audit by the officers, employees and representatives of PATH of such records and books of account and also any records and books of account of any company which is owned or controlled by the Contractor, or which owns or controls the Contractor if said company performs services similar to those performed by the Contractor anywhere in the Port District. However, if within the aforesaid three year period PATH has notified the Contractor in writing of a pending claim by PATH under or in

connection with this Contract to which any of the aforesaid records and documents of the Contractor or of its subcontractors relate either directly or indirectly, then the period of such right of access shall be extended to the expiration of six years from the date of final payment with respect to the records and documents involved.

Upon request of the Port Authority, the Contractor shall furnish or provide access to the federal Form I-9 (Employment Eligibility Verification) for each individual performing work under this Contract. This includes citizens and noncitizens.

The Contractor (and its subcontractors) shall, at its own expense, install, maintain and use such equipment and devices for recording the labor hours of the service as shall be appropriate to its business and necessary or desirable to keep accurate records of the same and as the general manager or the Facility Superintendent/Manager may from time to time require, and the Contractor (and its subcontractors) shall at all reasonable times allow inspection by the agents and employees of PATH of all such equipment or devices.

a. The Contractor hereby further agrees to furnish to PATH from time to time such written reports in connection with its operations hereunder as PATH may deem necessary or desirable. The format of all forms, schedules and reports furnished by the Contractor to PATH shall be subject to the continuing approval of PATH.
b. No provision in this Contract giving PATH a right of access to records and documents is intended to impair or affect any right of access to records and documents which they would have in the absence of such provision. Additional record keeping may be required under other sections of this Contract.

18. General Obligations

a. Except where expressly required or permitted herein to be oral, all notices, requests, consents and approvals required to be given to or by either party shall be in writing and all such notices, requests, consents and approvals shall be personally delivered to the other party during regular business hours or forwarded to such party by United States certified mail, return receipt requested, addressed to the other party at its address hereinbefore or hereafter provided. Until further notice the Contractor hereby designates the address shown on the bottom of the Contractors Signature Sheet as their address to which such notices, requests, consents, or approvals may be forwarded. All notices, requests, consents, or approvals of the Contractor shall be forwarded to the Superintendent/Manager at the Facility.
b. The Contractor shall comply with the provisions of all present and future federal, state and municipal laws, rules, regulations, requirements, ordinances, orders and directions which pertain to its operations under this Contract and which affect the Contract or the performance thereof and those engaged therein as if the said Contract were being performed for a private corporation, except where stricter requirements are contained in the Contract in which case the Contract shall control. The Contractor shall procure for itself all licenses, certificates, permits or other authorization from all governmental authorities, if any, having jurisdiction over the Contractor's operations hereunder which may be necessary for the Contractor's operations. The Contractor's obligation to comply with governmental requirements are not to be construed as a submission by PATH or the Port Authority to the application to itself of such requirements.
c. The Contractor shall pay all taxes, license, certification, permit and examination fees and excises which may be assessed on its property or operations hereunder or income therefrom, and shall make all applications, reports and returns required in connection therewith.
d. The Contractor shall, in conducting its operations hereunder, take all necessary precautions to protect the general environment and to prevent environmental pollution, contamination, damage to property and personal injury. In the event the Contractor encounters material reasonably believed to be asbestos, polychlorinated biphenyl (PCB) or any other hazardous material, in conducting its operations hereunder, the Contractor shall immediately stop Work in the area affected and report the condition in

writing to the Superintendent/Manager. Work in the affected area shall not thereafter be resumed by the Contractor except upon the issuance of a written order to that effect from the Superintendent/Manager.

e. The Contractor shall promptly observe, comply with and execute the provisions of any and all present and future rules and regulations, requirements, standard orders and directions of the American Insurance Association, the Insurance Services Office, National Fire Protection Association, and any other body or organization exercising similar functions which may pertain or apply to the Contractor's operations hereunder.

The Contractor shall not do or permit to be done any act which:

1. will invalidate or be in conflict with any fire insurance policies covering the Facility or any part thereof or upon the contents of any building thereon; or
2. will increase the rate of any fire insurance, extended coverage or rental insurance on the Facility or any part thereof or upon the contents of any building thereon; or
3. in the opinion of PATH will constitute a hazardous condition, so as to increase the risk normally attendant upon the operations contemplated by this Contract; or
4. may cause or produce in the premises, or upon the Facility any unusual, noxious or objectionable smoke, gases, vapors, odors; or
5. may interfere with the effectiveness or accessibility of the drainage and sewerage system, fire protection system, sprinkler system, alarm system, fire hydrants and hoses, if any, installed or located or to be installed or located in or on the Facility; or
6. shall constitute a nuisance in or on the Facility or which may result in the creation, commission or maintenance of a nuisance in or on the Facility.

f. If by reason of the Contractor's failure to comply with the provisions of this Section and provided PATH has given the Contractor five (5) days written notice of its failure and the Contractor shall not have cured said failure within said five (5) days, any fire insurance, extended coverage or rental insurance rate on the Facility or any part thereof or upon the contents of any building thereon shall at any time be higher than it otherwise would be, then the Contractor shall on demand pay PATH that part of all fire insurance, extended coverage or rental insurance premiums paid or payable by PATH which shall have been charged because of such violations by the Contractor.

g. The Contractor shall conduct its operations hereunder so as not to endanger, unreasonably interfere with, or delay the operations or activities of any tenants or occupants on the premises or the Facility and, moreover, shall use the same degree of care in performance on the premises as would be required by law of PATH and shall conduct operations hereunder in a courteous, efficient and safe manner.

h. The Contractor shall provide such equipment and medical facilities as may be necessary to supply first aid service in case of accidents to its personnel who may be injured in the furnishing of service hereunder. The Contractor shall maintain standing arrangements for the removal and hospital treatment of any of its personnel who may be injured.

19. Assignments and Subcontracting

a. The Contractor shall not sell, transfer, mortgage, pledge, subcontract or assign this Contract or any part thereof or any of the rights granted hereunder or any moneys due or to become due to it hereunder or enter into any contract requiring or permitting the doing of anything hereunder by an independent Contractor, without the prior written approval of PATH, and any such sale, transfer, mortgage, pledge, subcontract, assignment or contract without such prior written approval shall be void as to PATH.

b. All subcontractors who provide permanent personnel to the Contractor for work under this Contract shall be given written notice to comply with all requirements of the Contract. The Contractor shall be responsible and liable for the performance and acts of each subcontractor.

c. All persons to whom the Contractor sublets services shall be deemed to be its agents and no subletting or approval thereof shall be deemed to release this Contractor from its obligations under this Contract or to impose any obligations on PATH to such subcontractor or to give the subcontractor any rights against

PATH.

20. Indemnification and Risks Assumed By The Contractor

To the extent permitted by law, the Contractor shall indemnify and hold harmless PATH, the Port Authority, their Directors, Commissioners, officers, representatives and employees from and against all claims and demands, just or unjust, of third persons (including Contractor's employees, employees, officers, and agents of PATH and the Port Authority) arising out of or in any way connected or alleged to arise out of or alleged to be in any way connected with the Contract and all other services and activities of the Contractor under this Contract and for all expenses incurred by it and by them in the defense, settlement or satisfaction thereof, including without limitation thereto, claims and demands for death, for personal injury or for property damage, direct or consequential, whether they arise from the acts or omissions of the Contractor, of PATH, of the Port Authority, third persons (including Contractor's employees, employees, officers, and agents of PATH and the Port Authority), or from the acts of God or the public enemy, or otherwise, including claims and demands of any local jurisdiction against the Port Authority in connection with this Contract.

The Contractor assumes the following risks, whether such risks arise from acts or omissions (negligent or not) of the Contractor, PATH, the Port Authority, or third persons (including Contractor's employees, employees, officers, and agents of PATH and the Port Authority) or from any other cause, excepting only risks occasioned solely by affirmative willful acts of PATH or the Port Authority, as applicable, done subsequent to the opening of proposals on this Contract, and shall to the extent permitted by law indemnify PATH and the Port Authority for all loss or damage incurred in connection with such risks:

a. The risk of any and all loss or damage to PATH or Port Authority property, equipment (including but not limited to automotive and/or mobile equipment), materials and possessions, on or off the premises, the loss or damage of which shall arise out of the Contractor's operations hereunder. The Contractor shall if so directed by PATH, repair, replace or rebuild to the satisfaction of PATH or the Port Authority, as applicable, any and all parts of the premises or the Facility which may be damaged or destroyed by the acts or omissions of the Contractor, its officers, agents, or employees and if the Contractor shall fail so to repair, replace, or rebuild with due diligence PATH or the Port Authority, as applicable, may, at its option, perform any of the foregoing work and the Contractor shall pay to PATH or the Port Authority as applicable the cost thereof.

b. The risk of any and all loss or damage of the Contractor's property, equipment (including but not limited to automotive and/or mobile equipment) materials and possessions on the Facility.

c. The risk of claim, whether made against the Contractor, the Port Authority or PATH, for any and all loss or damages occurring to any property, equipment (including but not limited to automotive and/or mobile equipment), materials and possessions of the Contractor's agents, employees, materialmen and others performing work hereunder.

d. The risk of claims for injuries, damage or loss of any kind just or unjust of third persons arising or alleged to arise out of the performance of work hereunder, whether such claims are made against the Contractor, the Port Authority or PATH.

If so directed, the Contractor shall at its own expense defend any suit based upon any such claim or demand, even if such suit, claim or demand is groundless, false or fraudulent, and in handling such shall not, without obtaining express advance permission from the General Counsel of the Port Authority, raise any defense involving in any way the jurisdiction of the tribunal over the person of the Port Authority or PATH, the immunity of the Port Authority or PATH, their Directors, Commissioners, officers, agents or employees, the governmental nature of the Port Authority or PATH or the provision of any statutes respecting suits against PATH or the Port Authority.

Neither the requirements of PATH under this Contract, nor of PATH of the methods of performance

hereunder nor the failure of PATH to call attention to improper or inadequate methods or to require a change in the method of performance hereunder nor the failure of PATH to direct the Contractor to take any particular precaution or other action or to refrain from doing any particular thing shall relieve the Contractor of its liability for injuries to persons or damage to property or environmental impairment arising out of its operations.

21. Approval of Methods

Neither the approval of PATH of the methods of furnishing services hereunder nor the failure of PATH to call attention to improper or inadequate methods or to require a change in the method of furnishing services hereunder, nor the failure of PATH to direct the Contractor to take any particular precautions or to refrain from doing any particular thing shall relieve the Contractor of its liability for injuries to persons or damage to property or environmental impairment arising out of its operations.

22. Safety and Cleanliness

a. The Contractor shall, in the furnishing of services hereunder, exercise every precaution to prevent injury to person or damage to property or environmental impairment and avoid inconvenience to the occupants of or any visitors to the Facility. The Contractor shall, without limiting the generality hereof, place such personnel, erect such barricades and railings, give such warnings, display such lights, signals or signs, place such cones and exercise precautions as may be necessary, proper or desirable.

b. The Contractor shall in case of unsafe floor conditions due to construction, wetness, spillage, sickness and all other types of hazardous conditions proceed to rope off the unsafe area and place appropriate warnings signs to prevent accidents from occurring. The Contractor shall clean said area to the satisfaction of the Superintendent/Manager.

c. The Contractor shall at all times maintain in a clean and orderly condition and appearance any and all facilities provided by PATH for the Contractor's operations, and all fixtures, sink closets, equipment, and other personal property of PATH which are located in said facilities.

23. Accident Reports

The Contractor shall promptly report in writing to the Manager of the Facility and to the Deputy Chief, Litigation Management of the Port Authority all accidents whatsoever arising out of or in connection with its operations hereunder and which result in death or injury to persons or damage to property, setting forth such details thereof as PATH may desire. In addition, if death or serious injury or serious damage is caused, such accidents shall be immediately reported by telephone to the aforesaid representatives of PATH (or the Port Authority, as applicable).

24. Trash Removal

The Contractor shall remove daily from the Facility by means provided by the Contractor all garbage, debris and other waste material (solid or liquid) arising out of or in connection with its operations hereunder, and any such garbage, debris and other waste material not immediately removed shall be temporarily stored in a clear and sanitary condition, approved by the Superintendent/Manager and shall be kept covered except when filling or emptying them. The Contractor shall exercise care in removing such garbage, debris and other waste materials from the Facility. The manner of such storage and removal shall always be subject in all respects to the continual approval of PATH. No equipment or facilities of PATH shall be used in such removal unless with its prior consent in writing. No such garbage, debris or other waste materials shall be or be permitted to be thrown, discharged or disposed into or upon the waters at or bounding the Facility.

25. Lost and Found Property

The Contractor shall instruct its personnel that all items of personal property found by the Contractor's employees at the Site must be turned in to PATH and a receipt will be issued therefor.

26. Property of the Contractor

a. All property of the Contractor at the Site by virtue of this Contract shall be removed on or before the expiration or sooner termination or revocation of this Contract.

b. If the Contractor shall fail to remove its property upon the expiration, termination or revocation of this Contract PATH may, at its option, dispose of such property as waste or as agent for the Contractor and at the risk and expense of the Contractor, remove such property to a public warehouse, or may retain the same in its own possession, and in either event after the expiration of thirty (30) days may sell the same in accordance with any method deemed appropriate; the proceeds of any such sale shall be applied first, to the expenses of sale and second, to any sums owed by the Contractor to PATH; any balance remaining shall be paid to the Contractor. Any excess of the total cost of removal, storage and sale and other costs incurred by PATH as a result of such failure of performance by the Contractor over the proceeds of sale shall be paid by the Contractor to PATH upon demand.

27. Modification of Contract

This Contract may not be changed except in writing signed by PATH and the Contractor. The Contractor agrees that no representation or warranties shall be binding upon PATH unless expressed in writing in this Contract.

28. Invalid Clauses

If any provision of this Contract shall be such as to destroy its mutuality or to render it invalid or illegal, then, if it shall not appear to have been so material that without it the Contract would not have been made by the parties, it shall not be deemed to form part thereof but the balance of the Contract shall remain in full force and effect.

29. Approval of Materials, Supplies and Equipment

Only Port Authority/PATH approved materials, supplies, and equipment are to be used by the Contractor in performing the Work hereunder. Inclusion of chemical containing materials or supplies on the Port Authority/ PATH Approved Products List – Environmental Protection Supplies constitutes approval. The list may be revised from time to time and at any time by the Port Authority/PATH and it shall be incumbent upon the Contractor to obtain the most current list from the Superintendent/Manager of the Facility.

At anytime during the Solicitation, pre-performance or performance periods, the Contractor may propose the use of an alternate product or products to those on the Approved Products List – Environmental Protection Supplies, which product(s) shall be subject to review and approval by the Port Authority. Any alternate product so approved by the Port Authority/PATH may be used by the Contractor in performing the Services hereunder. Until such approval is given, only products on the Approved Products List – Environmental Protection Supplies may be used.

30. Intellectual Property

The right to use all patented materials, appliances, processes of manufacture or types of construction, trade and service marks, copyrights and trade secrets, collectively hereinafter referred to as "Intellectual Property Rights", in the performance of the work, shall be obtained by the Contractor without separate or additional compensation. Where the services under this Agreement require the Contractor to provide materials, equipment or software for the use of PATH/the Port Authority or its employees or agents, PATH/the Port Authority shall be provided with the Intellectual Property Rights required for such use without further compensation than is provided for under this Agreement.

The Contractor shall indemnify PATH and the Port Authority against and save it harmless from all loss and expense incurred as a result of any claims in the nature of Intellectual Property Rights infringement arising out of the Contractor's or PATH or the Port Authority's use, in accordance

with the above immediately preceding paragraph, of any Intellectual Property. The Contractor, if requested, shall conduct all negotiations with respect to and defend such claims. If the Contractor, the Port Authority or PATH, its employees or agents be enjoined either temporarily or permanently from the use of any subject matter as to which the Contractor is to indemnify PATH, or the Port Authority as applicable, against infringement, then PATH, or the Port Authority as applicable, may, without limiting any other rights it may have, require the Contractor to supply temporary or permanent replacement facilities approved by the Superintendent/Manager, and if the Contractor fails to do so the Contractor shall, at its expense, remove all such enjoined facilities and refund the cost thereof to PATH or the Port Authority, as applicable, or take such steps as may be necessary to insure compliance by the Contractor, and PATH (or the Port Authority, as applicable) with said injunction, to the satisfaction of PATH or the Port Authority as applicable.

In addition, the Contractor shall promptly and fully inform the Director/General Manager in writing of any intellectual property rights disputes, whether existing or potential, of which it has knowledge, relating to any idea, design, method, material, equipment or any other matter related to the subject matter of this Agreement or coming to its attention in connection with this Agreement.

31. Contract Records and Documents – Passwords and Codes

When the performance of the contract services requires the Contractor to produce, compile or maintain records, data, drawings, or documents of any kind, regardless of the media utilized, then all such records, drawings, data and documents which are produced, prepared or compiled in connection with this contract, shall become the property of PATH (or the Port Authority as applicable), and PATH (or the Port Authority as applicable) shall have the right to use or permit the use of them and any ideas or methods represented by them for any purpose and at any time without other compensation than that specifically provided herein.

When in the performance of the contract services the Contractor utilizes passwords or codes for any purpose, at any time during or after the performance of such services, upon written request by PATH (or the Port Authority as applicable), the Contractor shall make available to the designated PATH (or the Port Authority as applicable) representative all such passwords and codes.

32. Designated Secure Areas

Services under the Contract may be required in designated secure areas, as the same may be designated by the Superintendant/Manager from time to time (“Secure Areas”). The Port Authority shall require the observance of certain security procedures with respect to Secure Areas, which may include the escort to, at, and/or from said high security areas by security personnel designated by the Contractor or any subcontractor's personnel required to work therein. All personnel that require access to designated secure areas who are not under positive escort by an authorized individual will be required to undergo background screening and personal identity verification.

Forty-eight (48) hours prior to the proposed performance of any work in a Secure Area, the Contractor shall notify the Superintendant/Manager. The Contractor shall conform to the procedures as may be established by the Superintendant/Manager from time to time and at any time for access to Secure Areas and the escorting of personnel hereunder. Prior to the start of work, the Contractor shall request a description from the Superintendant/Manager of the Secure Areas which will be in effect on the commencement date. The description of Secure Areas may be changed from time to time and at any time by the Superintendant/Manager during the term of the Contract.

33. Notification of Security Requirements

PATH has the responsibility of ensuring safe, reliable and secure transportation facilities, systems, and projects to maintain the well-being and economic competitiveness of the region. Therefore, PATH reserves the right to deny access to certain documents, sensitive security construction sites and facilities (including rental spaces) to any person that declines to abide by Port Authority or PATH security procedures and protocols, any person with a criminal record with respect to certain crimes or who may otherwise poses a threat to the construction site or facility security. The Authority and PATH reserve the right to impose multiple layers of security requirements on the Contractor, its staff and subcontractors and their staffs depending upon the level of security required, or may make any amendments with respect to such requirements as determined by the Authority and/or PATH.

These security requirements may include but are not limited to the following:

- Execution of Port Authority Approved Non-disclosure Agreements

  At the direction of the Port Authority, the Contractor shall be required to have its principals, staff and/or subcontractor(s) and their staff, execute Port Authority approved non-disclosure agreements.

- Contractor/ Subcontractor identity checks and background screening

  PATH and the Port Authority's designated background screening provider may require inspection of not less than two forms of valid/current government issued identification (at least one having an official photograph) to verify staff's name and residence; screening federal, state, and/or local criminal justice agency information databases and files; screening of any terrorist identification files; access identification to include some form of biometric security methodology such as fingerprint, facial or iris scanning, or the like.

  The Contractor may be required to have its staff, and any subcontractor's staff, material-men, visitors or others over whom the Contractor/subcontractor has control, authorize the Authority or its designee to perform background checks, and a personal identity verification check. Such authorization shall be in a form acceptable to the Authority and/or PATH. The Contractor and subcontractors may also be required to use an organization designated by the Authority and/or PATH to perform the background checks.

  As of January 29, 2007, the Secure Worker Access Consortium (S.W.A.C.) is the only Port Authority approved provider to be used to conduct background screening and personal identity verification, except as otherwise required by federal law and/or regulation (such as the Transportation Worker Identification Credential for personnel performing in secure areas at Maritime facilities). Information about S.W.A.C., instructions, corporate enrollment, online applications, and location of processing centers can be found at http://www.secureworker.com, or S.W.A.C. may be contacted directly at (877) 522-7922 for more information and the latest pricing. The cost for said background checks for staff that pass and are granted a credential shall be reimbursable to the Contractor (and its subcontractors) as an out-of-pocket expense as provided herein. Staff that are rejected for a credential for any reason are not reimbursable.

- Issuance of Photo Identification Credential

  No person will be permitted on or about a Port Authority or PATH construction site or facility (including rental spaces) without a facility-specific photo identification credential approved by the Authority and/or PATH. If the authority requires facility-specific identification credential for the Contractor's and the subcontractor's staff, the Authority and/or PATH will supply such identification at no cost to the Contractor or its subcontractors. Such facility-specific identification credential shall remain the property of the Authority and/or PATH and shall be returned to the Authority and/or PATH at the completion or upon request prior to completion of the individual's assignment at the specific facility. It is the responsibility of the appropriate Contractor or subcontractor to immediately report to the Authority and/or PATH the loss of any staff member's individual facility-specific identification credential. The Contractor or subcontractor shall be billed for the cost of the replacement identification credential. Contractor's and subcontractor's staff shall display Identification badges in a conspicuous and clearly visible manner, when entering, working or leaving an Authority or PATH construction site or facility.

Employees may be required to produce not less than two forms of valid/current government issued identification having an official photograph and an original, unlaminated social security card for identify and SSN verification. Where applicable, for sensitive security construction sites or facilities, successful completion of the application, screening and identify verification for all employees of the Contractor and subcontractors shall be completed prior to being provided a S.W.A.C. ID Photo Identification credential.

- Access control, inspection, and monitoring by security guards

The Authority may provide for Authority and/or PATH construction site or facility (including rental spaces) access control, inspection and monitoring by Port Authority Police, Authority or PATH retained contractor security guards. However, this provision shall not relieve the Contractor of its responsibility to secure its equipment and work and that of its subconsultant/subcontractor's and service suppliers at the Authority or PATH construction site or facility (including rental spaces). In addition, the Contractor, subcontractor or service provider is not permitted to take photographs, digital images, electronic copying and/or electronic transmission or video recordings or make sketches on any other medium at the Authority or PATH construction sites or facilities (including rental spaces), except when necessary to perform the Work under this Contract, without prior written permission from the Authority or PATH. Upon request, any photograph, digital images, video recording or sketches made of the Authority construction site or facility shall be submitted to the Authority to determine compliance with this paragraph, which submission shall be conclusive and binding on the submitting entity.

- Compliance with the Port Authority Information Security Handbook

The Contract may require access to Port Authority or PATH information considered Protected Information ("PI") as defined in the Port Authority Information Security Handbook ("Handbook"), dated October, 2008, corrected as of November 14, 2013, and as may be further amended. The Handbook and its requirements are hereby incorporated into this agreement and will govern the possession, distribution and use of PI if at any point during the lifecycle of the project or solicitation it becomes necessary for the Contractor to have access to PI. Protecting sensitive information requires the application of uniform safeguarding measures to prevent unauthorized disclosure and to control any authorized disclosure of this information within the Port Authority or when released by the Port Authority to outside entities. The following is an outline of some of the procedures, obligations and directives contained in the Handbook:

(1) require that the Contractor and subcontractors, when appropriate, sign Non-Disclosure Agreements (NDAs), or an Acknowledgment of an existing NDA, provided by the Authority as a condition of being granted access to Protected Information categorized and protected as per the Handbook;
(2) require that individuals needing access to PI be required to undergo a background check, pursuant to the process and requirements noted in § 3.2 of the Information Security Handbook.
(3) require Contractors and commercial enterprises to attend training to ensure security awareness regarding Port Authority and PATH information;
(4) specific guidelines and requirements for the handling of PI to ensure that the storage and protection of PI;
(5) restrictions on the transfer, shipping, and mailing of PI;
(6) prohibitions on the publication, posting, modifying, copying, reproducing, republishing, uploading, transmitting, or distributing PI on websites or web pages. This may also include restricting persons, who either have not passed a pre-screening background check, or who have not been granted access to PI, from viewing such information;
(7) require that PI be destroyed using certain methods, measures or technology pursuant to the requirements set forth in the Handbook;
(8) require the Contractor to mandate that each of its subcontractors maintain the same levels of security required of the Contractor under any Port Authority or PATH awarded contract.
(9) prohibit the publication, exchange or dissemination of PI developed from the project or contained in reports, except between Contractors and subcontractors, without prior approval of the Port Authority;

(10) require that PI only be reproduced or copied pursuant to the requirements set forth in the Handbook.

- Audits for Compliance with Security Requirements

The Port Authority and/or PATH may conduct random or scheduled examinations of business practices under this section entitled "NOTIFICATION OF SECURITY REQUIREMENTS" and the Handbook in order to assess the extent of compliance with security requirements, Protected Information procedures, protocols and practices, which may include, but not be limited to, verification of background check status, confirmation of completion of specified training, and/or a site visit to view material storage locations and protocols.

34. Construction In Progress

The Contractor recognizes that construction may be in progress at the Facility and may continue throughout the term of this Contract. Notwithstanding, the Contractor shall at all times during the term hereof maintain the same standards of performance and cleanliness as prevails in non-affected areas as required by the standards hereunder.

35. Permit-Required Confined Space Work

Prior to commencement of any work, the Contractor shall request and obtain from PATH a description of all spaces at the facility which are permit-required confined spaces requiring issuance of an OSHA permit.

Prior to the commencement of any work in a permit-required confined space at a Port Authority facility requiring issuance of an OSHA permit, the Contractor shall contact the Superintendent/Manager to obtain a PATH Contractor Permit-Required Confined Space Notification form. The notification form must be filled out and submitted prior to commencing permit-required confined space work. All confined space work shall be performed in accordance with all applicable OSHA requirements. The Contractor shall provide its employees with a copy of its own company permit and shall furnish PATH with a copy of the permit upon completion of the work. The Contractor must supply all equipment required for working in a confined space.

36. Signs

Except with the prior written approval of PATH, the Contractor shall not erect, maintain or display any signs or posters or any advertising on or about the Facility.

37. Vending Machines, Food Preparation

The Contractor shall not install, maintain or operate on the Facility, or on any other PATH property, any vending machines without the prior written approval of the Port Authority. No foods or beverages shall be prepared or consumed at the Facility by any of the Contractor's employees except in areas as may be specifically designated by PATH for such purpose.

38. Confidential Information/Non-Publication

a. As used herein, confidential information shall mean all information disclosed to the Contractor or the personnel provided by the Contractor hereunder which relates to the Authority's and/or PATH's past, present, and future research, development and business activities including, but not limited to, software and documentation licensed to the Authority or proprietary to the Authority and/or PATH and all associated software, source code procedures and documentation. Confidential information shall also mean any other tangible or intangible information or materials including but not limited to computer identification numbers, access codes, passwords, and reports obtained and/or used during the performance of the Contractor's Services under this Contract.

b. Confidential information shall also mean and include collectively, as per *The Port Authority of New York & New Jersey Information Security Handbook (October 15, 2008, corrected as of November 14, 2013),* Protected Information, Confidential Proprietary Information, Confidential Privileged Information and information that is labeled, marked or otherwise identified by or on behalf of the Authority so as to reasonably connote that such information is confidential, privileged, sensitive or proprietary in nature. Confidential Information shall also include all work product that contains or is derived from any of the foregoing, whether in whole or in part, regardless of whether prepared by the Authority or a third-party or when the Authority receives such information from others and agrees to treat such information as Confidential.

c. The Contractor shall hold all such confidential information in trust and confidence for the Authority, and agrees that the Contractor and the personnel provided by the Contractor hereunder shall not, during or after the termination or expiration of this Contract, disclose to any person, firm or corporation, nor use for its own business or benefit, any information obtained by it under or in connection with the supplying of services contemplated by this Contract. The Contractor and the personnel provided by the Contractor hereunder shall not violate in any manner any patent, copyright, trade secret or other proprietary right of the Authority or third persons in connection with their services hereunder, either before or-after termination or expiration of this Contract. The Contractor and the personnel provided by the Contractor hereunder shall not willfully or otherwise perform any dishonest or fraudulent acts, breach any security procedures, or damage or destroy any hardware, software or documentation, proprietary or otherwise, in connection with their services hereunder. The Contractor shall promptly and fully inform the Director/General Manager in writing of any patent, copyright, trade secret or other intellectual property rights or disputes, whether existing or potential, of which the Contractor has knowledge, relating to any idea, design, method, material, equipment or other matter related to this Contract or coming to the Contractor's attention in connection with this Contract.

d. The Contractor shall not issue nor permit to be issued any press release, advertisement, or literature of any kind, which refers to PATH (or the Port Authority as applicable) or to the fact that goods have been, are being or will be provided to it and/or that services have been, are being or will be performed for it in connection with this Agreement, unless the vendor first obtains the written approval of PATH (or the Port Authority as applicable). Such approval may be withheld if for any reason PATH believes that the publication of such information would be harmful to the public interest or is in any way undesirable

39. Time is of the Essence

Time is of the essence in the Contractor's performance of this Contract inasmuch as the Work to be performed will affect the operation of public facilities.

40. Holidays

The following holidays will be observed at the Site:

New Year's Day	Labor Day
Martin Luther King Jr. Day	Columbus Day
Presidents' Day	Election Day
Memorial Day	Veterans Day
Independence Day	Thanksgiving Day
	Christmas Day

This list is subject to periodic revision and the Contractor shall be responsible for obtaining all updated lists from the office of the Superintendent/Manager. If any such holiday falls on a Sunday then the next day shall be considered the holiday and/or if any such holiday falls on a Saturday then the preceding day shall be considered the holiday.

41. Personnel Standards

In addition to any specific personnel requirements that may be required under the clause entitled "Personnel Requirements" in the Specifications, the Contractor (and any Subcontractor) shall furnish competent and adequately trained personnel to perform the Work hereunder. If, in the opinion of the Superintendent/Manager, any employee so assigned is performing their functions unsatisfactorily, they shall be replaced by the Contractor within twenty-four (24) hours following the Contractor's receipt of the Superintendent/Manager's request for such replacement.

All Contractor's employees performing Work hereunder shall have the ability to communicate in the English language to the extent necessary to comprehend directions given by either the Contractor's supervisory staff or by the Superintendent/Manager's staff. Any employee operating a motor vehicle must have a valid driver's license.

The Contractor shall verify that employees working under this Contract in the United States are legally present in the United States and authorized to work by means of the federally required I-9 program

42. General Uniform Requirements for Contractor's Personnel

In addition to any specific uniform requirements that may be required by the Specifications, uniforms must be worn at all times during which the Services are being performed hereunder. The Contractor agrees that his/her employees will present a neat, clean and orderly appearance at all times. Uniforms shall include the Contractor's identification badge with picture ID bearing the employee's name. All uniforms, colors, types and styles shall be subject to the prior approval of the Superintendent/Manager. The Contractor will also be responsible for ensuring that its employees are wearing shoes appropriate for the tasks performed. The Superintendent/Manager shall have the right to require removal of any employee who shall fail to wear the proper uniform and shoes, and the exercise of this right shall not limit the obligation of the Contractor to perform the Services or to furnish any required number of employees at a specific location at the Site as specified.

43. Labor, Equipment and Materials Supplied by the Contractor

The Contractor shall, at all times during the performance of this Contract, furnish all necessary labor, supervision, equipment and materials necessary for the prompt and efficient performance of the Work, whether such materials and equipment are actually employed in the furnishing of the Work or whether incidental thereto.

All materials used by the Contractor in furnishing Work hereunder shall be of such quality as to accomplish the purposes of this Contract and the Services to be furnished hereunder in such manner so as not to damage any part of the Site.

PATH by its officers, employees and representatives shall have the right at all times to examine the supplies, materials and equipment used by the Contractor, to observe the operations of the Contractor, its agents, servants and employees and to do any act or thing which PATH may be obligated or have the right to do under this Contract or otherwise.

All equipment, materials and supplies used in the performance of this Contract required hereunder shall be used in accordance with their manufacturer's instructions.

Materials and supplies to be provided by the Contractor hereunder shall comply with OSHA and all applicable regulations.

44. Contractor's Vehicles – Parking - Licenses

At the discretion of the Superintendent/Manager, PATH may permit the Contractor during the effective period of this Contract to park vehicle(s) used by it in its operations hereunder in such location as may from time to time or at any time be designated by the Superintendent/Manager. The Contractor shall comply with such existing rules, regulations and procedures as are now in force and such reasonable future rules, regulations and procedures as may hereafter be adopted by PATH for the safety and convenience of persons who park automotive vehicles in any parking area at the Site or for the safety and proper persons who park automotive vehicles in any parking area at the Site or for the safety and proper identification of such vehicles, and the Contractor shall also comply with any and all directions pertaining to such parking which may be given from time to time and at any time by the Superintendent/Manager. Any vehicle used by the Contractor hereunder shall be marked or placarded, identifying it as the Contractor's vehicle.

45. Superintendent/Manager's Authority

In the performance of the Work hereunder, the Contractor shall conform to all orders, directions and requirements of the Superintendent/Manager and shall perform the Work hereunder to the satisfaction of the Superintendent/Manager at such times and places, by such methods and in such manner and sequence as he/she may require, and the Contract shall at all stages be subject to his/her inspection. The Superintendent/Manager shall determine the amount, quality, acceptability and fitness of all parts of the Work and shall interpret the Specifications and any orders for Extra Work. The Contractor shall employ no equipment, materials, methods or staff or personnel to which the Superintendent/Manager objects. Upon request, the Superintendent/Manager shall confirm in writing any oral order, direction, requirement or determination.

The Superintendent/Manager shall have the authority to decide all questions in connection with the Services to be performed hereunder. The exercise by the Superintendent/Manager of the powers and authorities vested in him/her by this section shall be binding and final upon PATH and the Contractor.

PART III CONTRACTOR'S INTEGRITY PROVISIONS

1. Certification of No Investigation (criminal or civil anti-trust), Indictment, Conviction, Debarment, Suspension, Disqualification and Disclosure of Other Information

By bidding on this Contract, each Bidder and each person signing on behalf of any Bidder certifies, and in the case of a joint bid each party thereto certifies as to its own organization, that the Bidder and each parent and/or affiliate of the Bidder has not

a. been indicted or convicted in any jurisdiction;
b. been suspended, debarred, found not responsible or otherwise disqualified from entering into any contract with any governmental agency or been denied a government contract for failure to meet standards related to the integrity of the Bidder;
c. had a contract terminated by any governmental agency for breach of contract or for any cause based in whole or in part on an indictment or conviction;
d. ever used a name, trade name or abbreviated name, or an Employer Identification Number different from those inserted in the Bid;
e. had any business or professional license suspended or revoked or, within the five years prior to bid opening, had any sanction imposed in excess of fifty thousand dollars ($50,000) as a result of any judicial or administrative proceeding with respect to any license held or with respect to any violation of a federal, state or local environmental law, rule or regulation;
f. had any sanction imposed as a result of a judicial or administrative proceeding related to fraud, extortion, bribery, bid rigging, embezzlement, misrepresentation or anti-trust regardless of the dollar amount of the sanctions or the date of their imposition; and
g. been, and is not currently, the subject of a criminal investigation by any federal, state or local

prosecuting or investigative agency and/or a civil anti-trust investigation by any federal, state or local prosecuting or investigative agency.

2. Non-Collusive Bidding, and Code of Ethics Certification, Certification of No Solicitation Based On Commission, Percentage, Brokerage, Contingent or Other Fees

By bidding on this Contract, each Bidder and each person signing on behalf of any Bidder certifies, and in the case of a joint bid, each party thereto certifies as to its own organization, that

a. the prices in its bid have been arrived at independently without collusion, consultation, communication or agreement for the purpose of restricting competition, as to any matter relating to such prices with any other bidder or with any competitor;
b. the prices quoted in its bid have not been and will not be knowingly disclosed directly or indirectly by the Bidder prior to the official opening of such bid to any other bidder or to any competitor;
c. no attempt has been made and none will be made by the Bidder to induce any other person, partnership or corporation to submit or not to submit a bid for the purpose of restricting competition;
d. this organization has not made any offers or agreements or taken any other action with respect to any Authority employee or former employee or immediate family member of either which would constitute a breach of ethical standards under the Code of Ethics dated April 11, 1996, (a copy of which is available upon request) nor does this organization have any knowledge of any act on the part of an Authority employee or former Authority employee relating either directly or indirectly to this organization which constitutes a breach of the ethical standards set forth in said Code;
e. no person or selling agency other than a bona fide employee or bona fide established commercial or selling agency maintained by the Bidder for the purpose of securing business, has been employed or retained by the Bidder to solicit or secure this Contract on the understanding that a commission, percentage, brokerage, contingent, or other fee would be paid to such person or selling agency; and
f. the Bidder has not offered, promised or given, demanded or accepted, any undue advantage, directly or indirectly, to or from a public official or employee, political candidate, party or party official, or any private sector employee (including a person who directs or works for a private sector enterprise in any capacity), in order to obtain, retain, or direct business or to secure any other improper advantage in connection with this Contract.
g. no person or organization has been retained, employed or designated on behalf of the Bidder to impact any Port Authority determination, where the solicitation is a Request for Proposals, with respect to (i) the solicitation, evaluation or award of this Contract, or (ii) the preparation of specifications or request for submissions in connection with this Contract.

The foregoing certifications shall be deemed to be made by the Bidder as follows:

* if the Bidder is a corporation, such certification shall be deemed to have been made not only with respect to the Bidder itself, but also with respect to each parent, affiliate, director, and officer of the Bidder, as well as, to the best of the certifier's knowledge and belief, each stockholder of the Bidder with an ownership interest in excess of 10%;
* if the Bidder is a partnership, such certification shall be deemed to have been made not only with respect to the Bidder itself, but also with respect to each partner.

Moreover, the foregoing certifications, if made by a corporate Bidder, shall be deemed to have been authorized by the Board of Directors of the Bidder, and such authorization shall be deemed to include the signing and submission of the bid and the inclusion therein of such certification as the act and deed of the

corporation.

In any case where the Bidder cannot make the foregoing certifications, the Bidder shall so state and shall furnish with the signed bid a signed statement which sets forth in detail the reasons therefor. If the Bidder is uncertain as to whether it can make the foregoing certifications, it shall so indicate in a signed statement furnished with its bid, setting forth in such statement the reasons for its uncertainty. With respect to the foregoing certification in paragraph "2g", if the Bidder cannot make the certification, it shall provide, in writing, with the signed bid: (i) a list of the name(s), address(es), telephone number(s), and place(s) of principal employment of each such individual or organization; and (ii) a statement as to whether such individual or organization has a "financial interest" in this Contract, as described in the Procurement Disclosure policy of the Authority (a copy of which is available upon request to the Director of the Procurement Department of the Authority). Such disclosure is to be updated, as necessary, up to the time of award of this Contract. As a result of such disclosure, the Port Authority shall take appropriate action up to and including a finding of non-responsibility.

Failure to make the required disclosures shall lead to administrative actions up to and including a finding of non-responsiveness or non-responsibility.
Notwithstanding that the Bidder may be able to make the foregoing certifications at the time the bid is submitted, the Bidder shall immediately notify the Authority in writing during the period of irrevocability of bids and the term of the Contract, if Bidder is awarded the Contract, of any change of circumstances which might under this clause make it unable to make the foregoing certifications, might render any portion of the certifications previously made invalid, or require disclosure. The foregoing certifications or signed statement shall be deemed to have been made by the Bidder with full knowledge that they would become a part of the records of the Authority and that the Authority will rely on their truth and accuracy in awarding and continuing this Contract. In the event that the Authority should determine at any time prior or subsequent to the award of this Contract that the Bidder has falsely certified as to any material item in the foregoing certifications, has failed to immediately notify the Port Authority of any change in circumstances which might make it unable to make the foregoing certifications, might render any portion of the certifications previously made invalid, or require disclosure, or has willfully or fraudulently furnished a signed statement which is false in any material respect, or has not fully and accurately represented any circumstance with respect to any item in the foregoing certifications required to be disclosed, the Authority may determine that the Bidder is not a responsible Bidder with respect to its bid on the Contract or with respect to future bids on Authority contracts and may exercise such other remedies as are provided to it by the Contract with respect to these matters. In addition, Bidders are advised that knowingly providing a false certification or statement pursuant hereto may be the basis for prosecution for offering a false instrument for filing (see e.g. New York Penal Law, Section 175.30 et seq.). Bidders are also advised that the inability to make such certification will not in and of itself disqualify a Bidder, and that in each instance the Authority will evaluate the reasons therefor provided by the Bidder. Under certain circumstances the Bidder may be required as a condition of Contract award to enter into a Monitoring Agreement under which it will be required to take certain specified actions, including compensating an independent Monitor to be selected by the Port Authority, said Monitor to be charged with, among other things, auditing the actions of the Bidder to determine whether its business practices and relationships indicate a level of integrity sufficient to permit it to continue business with the Port Authority.

3. Bidder Eligibility for Award of Contracts - Determination by an Agency of the State of New York or New Jersey Concerning Eligibility to Receive Public Contracts

Bidders are advised that the Authority has adopted a policy to the effect that in awarding its contracts it will honor any determination by an agency of the State of New York or New Jersey that a Bidder is not eligible to bid on or be awarded public contracts because the Bidder has been determined to have engaged in illegal or dishonest conduct or to have violated prevailing rate of wage legislation.

The policy permits a Bidder whose ineligibility has been so determined by an agency of the State of New York or New Jersey to submit a bid on a Port Authority contract and then to establish that it is eligible to be awarded a contract on which it has bid because (i) the state agency determination relied upon does not apply to the Bidder,

or (ii) the state agency determination relied upon was made without affording the Bidder the notice and hearing to which the Bidder was entitled by the requirements of due process of law, or (iii) the state agency determination was clearly erroneous or (iv) the state determination relied upon was not based on a finding of conduct demonstrating a lack of integrity or violation of a prevailing rate of wage law.

The full text of the resolution adopting the policy may be found in the Minutes of the Authority's Board of Commissioners meeting of September 9, 1993.

4. Contractor Responsibility, Suspension of Work and Termination

During the term of this Contract, the Contractor shall at all times during the Contract term remain responsible. The Contractor agrees, if requested by the Port Authority to present evidence of its continuing legal authority to do business in the States of New Jersey or New York, integrity, experience, ability, prior performance, and organizational and financial capacity.

The Port Authority, in its sole discretion, reserves the right to suspend any or all activities under this Contract, at any time, when it discovers information that calls into question the responsibility of the Contractor. In the event of such suspension, the Contractor will be given written notice outlining the particulars of such suspension. Upon issuance of such notice, the Contractor must comply with the terms of the suspension order. Contract activity may resume at such time as the Port Authority issues a written notice authorizing a resumption of performance under the Contract.

Upon written notice to the Contractor, and an opportunity to be heard with appropriate Port Authority officials or staff, the Contract may be terminated by Port Authority at the Contractor's expense where the Contractor is determined by the Port Authority to be non-responsible. In such event, the Port Authority or its designee may complete the contractual requirements in any manner he or she may deem advisable and pursue available legal or equitable remedies for breach, including recovery of costs from Contractor associated with such termination.

5. No Gifts, Gratuities, Offers of Employment, Etc.

At all times, the Contractor shall not offer, give or agree to give anything of value either to a Port Authority employee, agent, job shopper, consultant, construction manager or other person or firm representing the Port Authority, or to a member of the immediate family (i.e., a spouse, child, parent, brother or sister) of any of the foregoing, in connection with the performance by such employee, agent, job shopper, consultant, construction manager or other person or firm representing the Port Authority of duties involving transactions with the Contractor on behalf of the Port Authority, whether or not such duties are related to this Contract or any other Port Authority contract or matter. Any such conduct shall be deemed a material breach of this Contract.

As used herein "anything of value" shall include but not be limited to any (a) favors, such as meals, entertainment, transportation (other than that contemplated by the Contract or any other Port Authority contract), etc. which might tend to obligate the Port Authority employee to the Contractor, and (b) gift, gratuity, money, goods, equipment, services, lodging, discounts not available to the general public, offers or promises of employment, loans or the cancellation thereof, preferential treatment or business opportunity. Such term shall not include compensation contemplated by this Contract or any other Port Authority contract. Where used herein, the term "Port Authority" shall be deemed to include all subsidiaries of the Port Authority.

The Contractor shall insure that no gratuities of any kind or nature whatsoever shall be solicited or accepted by it and by its personnel for any reason whatsoever from the passengers, tenants, customers or other persons using the Facility and shall so instruct its personnel.

In the event that the Contractor becomes aware of the occurrence of any conduct that is prohibited by this section entitled “No Gifts, Gratuities, Offers of Employment, Etc.”, it shall report such occurrence to the Port

Authority's Office of Inspector General within three (3) business days of obtaining such knowledge. (See "http://www.panynj.gov/inspector-general" for information about to report information to the Office of Inspector General). Failing to report such conduct shall be grounds for a finding of non-responsibility.

In addition, during the term of this Contract, the Contractor shall not make an offer of employment or use confidential information in a manner proscribed by the Code of Ethics and Financial Disclosure dated April 11, 1996, (a copy of which is available upon request to the Office of the Secretary of the Port Authority).

The Contractor shall include the provisions of this clause in each subcontract entered into under this Contract.

6. Conflict of Interest

During the term of this Contract, the Contractor shall not participate in any way in the preparation, negotiation or award of any contract (other than a contract for its own services to the Authority) to which it is contemplated the Port Authority may become a party, or participate in any way in the review or resolution of a claim in connection with such a contract if the Contractor has a substantial financial interest in the contractor or potential contractor of the Port Authority or if the Contractor has an arrangement for future employment or for any other business relationship with said contractor or potential contractor, nor shall the Contractor at any time take any other action which might be viewed as or give the appearance of conflict of interest on its part. If the possibility of such an arrangement for future employment or for another business arrangement has been or is the subject of a previous or current discussion, or if the Contractor has reason to believe such an arrangement may be the subject of future discussion, or if the Contractor has any financial interest, substantial or not, in a contractor or potential contractor of the Authority, and the Contractor's participation in the preparation, negotiation or award of any contract with such a contractor or the review or resolution of a claim in connection with such a contract is contemplated or if the Contractor has reason to believe that any other situation exists which might be viewed as or give the appearance of a conflict of interest, the Contractor shall immediately inform the Director in writing of such situation giving the full details thereof. Unless the Contractor receives the specific written approval of the Director, the Contractor shall not take the contemplated action which might be viewed as or give the appearance of a conflict of interest. The Director may require the Contractor to submit a mitigation plan addressing and mitigating any disclosed or undisclosed conflict, which is subject to the approval of the Director and shall become a requirement, as though fully set forth in this Contract. In the event the Director shall determine that the performance by the Contractor of a portion of its Services under this Agreement is precluded by the provisions of this numbered paragraph, or a portion of the Contractor's said Services is determined by the Director to be no longer appropriate because of such preclusion, then the Director shall have full authority on behalf of both parties to order that such portion of the Contractor's Services not be performed by the Contractor, reserving the right, however, to have the Services performed by others and any lump sum compensation payable hereunder which is applicable to the deleted work shall be equitably adjusted by the parties. The Contractor's execution of this document shall constitute a representation by the Contractor that at the time of such execution the Contractor knows of no circumstances, present or anticipated, which come within the provisions of this paragraph or which might otherwise be viewed as or give the appearance of a conflict of interest on the Contractor's part. The Contractor acknowledges that the Authority may preclude it from involvement in certain disposition/privatization initiatives or transactions that result from the findings of its evaluations hereunder or from participation in any contract, which results, directly or indirectly, from the Services provided by the Contractor hereunder. The Port Authority's determination regarding any questions of conflict of interest shall be final.

7. Definitions

As used in this section, the following terms shall mean:

> Affiliate - Two or more firms are affiliates if a parent owns more than fifty percent of the voting stock of each of the firms, or a common shareholder or group of shareholders owns more than fifty percent of the voting stock of each of the firms, or if the firms have a common proprietor or general partner.

Agency or Governmental Agency - Any federal, state, city or other local agency, including departments, offices, public authorities and corporations, boards of education and higher education, public development corporations, local development corporations and others.

Investigation - Any inquiries made by any federal, state or local criminal prosecuting and/or law enforcement agency and any inquiries concerning civil anti-trust investigations made by any federal, state or local governmental agency. Except for inquiries concerning civil anti-trust investigations, the term does not include inquiries made by any civil government agency concerning compliance with any regulation, the nature of which does not carry criminal penalties, nor does it include any background investigations for employment, or Federal, State, and local inquiries into tax returns.

Officer - Any individual who serves as chief executive officer, chief financial officer, or chief operating officer of the Bidder by whatever titles known.

Parent - An individual, partnership, joint venture or corporation which owns more than 50% of the voting stock of the Bidder.

If the solicitation is a Request for Proposal:

Bid - shall mean Proposal;
Bidder - shall mean Proposer;
Bidding - shall mean submitting a Proposal.

In a Contract resulting from the taking of bids:

Bid - shall mean bid;
Bidder - shall mean Bidder; except and until the Contract has been awarded, then it shall mean Contractor
Bidding - shall mean executing this Contract.

In a Contract resulting from the taking of Proposals:

Bid - shall mean Proposal;
Bidder - shall mean Proposer;
Bidding - shall mean executing this Contract.

APPENDIX A1

DBE GOALS STATEMENT

The undersigned Bidder has satisfied the requirements of the Contract in the following manner (Complete the appropriate spaces and check one box):

- ☐ The Bidder is committed to meeting the DBE contract goal set forth in this Contract.

  OR

- ☐ The Bidder is unable to meet the DBE contract goal set forth in this Contract, but is committed to a minimum of _____% DBE contract on this Contract and submits the attached narrative and documentation demonstrating good faith efforts consistent with Appendix A of 49 CFR 26 to meet the DBE utilization goal set forth in this Contract. Attach as many pages as necessary to provide a full and complete narrative and supporting documentation of good faith efforts made. This narrative shall be submitted on company letterhead and signed.

It is the present intent of the Bidder to utilize the specific DBE firms identified in Appendix A2 in the performance of the Work of this Contract. If for any reason, one or more of the DBE firms identified in Appendix A2 are unable or unwilling to participate, Bidder will make every effort to replace the DBE firm with another DBE firm in accordance with the Purchase Order Terms and Conditions clause entitled "DBE Program".

Bidder Name: _____

Federal Tax ID No.: _____

By: _____

Signature and Title

APPENDIX A2
THE PORT AUTHORITY OF NY & NJ – OFFICE OF BUSINESS DIVERSITY AND CIVIL RIGHTS
DBE PARTICIPATION PLAN AND AFFIRMATION STATEMENT

Instructions: Submit one DBE PARTICIPATION PLAN AND AFFIRMATION STATEMENT form for each DBE firm used on this Contract.

CONTRACT NUMBER AND TITLE: _____

BIDDER:
Name of Firm: _____

Address: _____Telephone: _____

Email Address: _____

DBE:
Name of Firm: _____

Address: _____Telephone: _____

Description of work to be performed by DBE: _____

_____

Calculation (supply only): _____

The Bidder is committed to utilizing the above-named DBE for the work described above. The estimated dollar value of this work is $_____ or ____% of the total contract amount of $_____. The anticipated start date is _____and the anticipated completion date is _____.

AFFIRMATION

The above-named DBE affirms that it will perform the portion of the Contract for the estimated dollar value as stated above.

By: _____ Date: _____
Signature of DBE and Title

If the Bidder does not receive award of the Contract, any and all representations in this DBE Participation Plan and Affirmation Statement shall be null and void.

By: _____ Date: _____
Signature of Bidder and Title

FOR OBDCR USE ONLY

Contract Goals: ☐ Approved ☐ Rejected ☐ Preliminary Plan Approved
Reviewed By: _____
OBDCR Business Development Representative
Signature: _____ Date:_____

Please Note: Only 60% of the expenditure to a DBE material supplier will be counted toward the DBE goal. Please show calculation above. Example: $100,000 x 60% = $60,000 estimated DBE dollar value of work. Plan cannot be accepted without calculation.

APPENDIX A3

INFORMATION ON SOLICITED FIRMS

The bidder must complete this form for itself and for all firms which gave the bidder a quotation for any work planned to be subcontracted regardless of whether they are ultimately chosen to participate in the Contract. Provide the information required below for every firm that provided a bid or a quote for a subcontract – even if the bid or quote from the firm is not used in the preparation of the final Proposal.

Name of Firm	Address of Firm	Phone Number	Contact Person	Firm Age	Annual Gross Revenue Range NOTE: See Footnote Below	DBE Certified (Yes/No)

Footnote: Annual Gross Revenue Ranges: Less than $500,000; $500,000 - $1 Million; $1 - $2 Million; $2 - $5 Million; Over $5 Million - Select the category that best identifies the annual gross revenue of the solicited firm.

REVISION No.

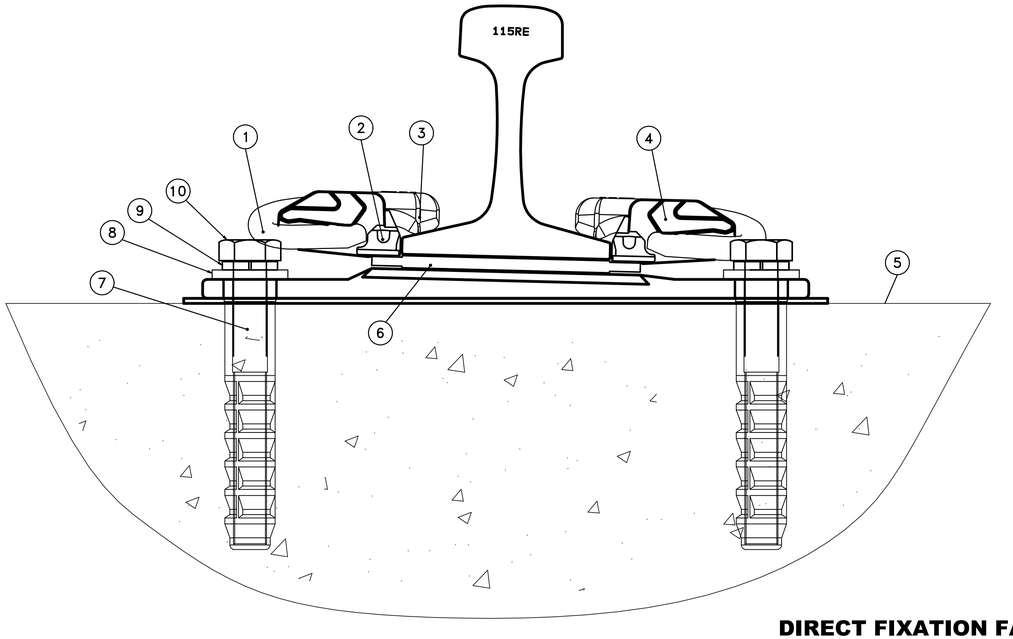

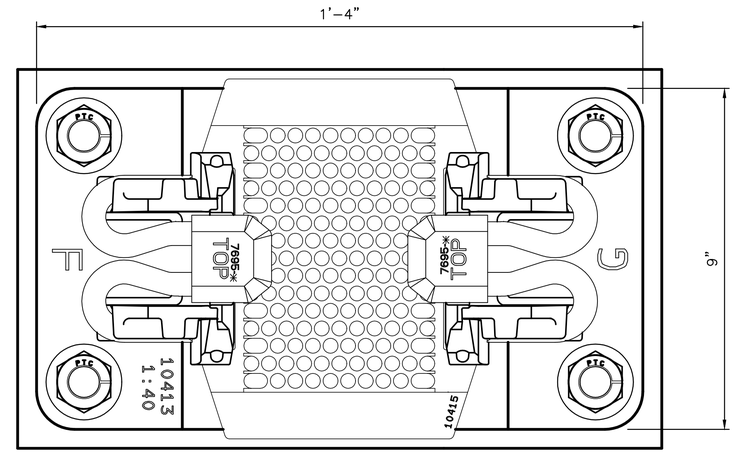

PLAN

DIRECT FIXATION FASTENER ASSEMBLY (TYPICAL)

0 .125 .25 .5 .75 1
SCALE IN FEET

PARTS LIST

ITEM #	PART NUMBER	DESCRIPTION	QTY
1	6687	FC1601 FASTCLIP	2*
2	6686	SIDE POST INSULATOR	2
3	7695	CLOSED TOE INSULATOR	2
4	10413	CAST BASEPLATE	1
5	10417	1/8" THICK BASEPLATE PAD	1
6	10415	11mm DOUBLE STUDDED RAIL PAD	1
7	10094	ANCHOR INSERT	4*
8	10416	BUSHING	4*
9	10095	LOCK WASHER	4*
10	10093	7/8" CAP SCREW	4*

QUANTITIES PER RAIL SEAT
*SEE NOTE 1

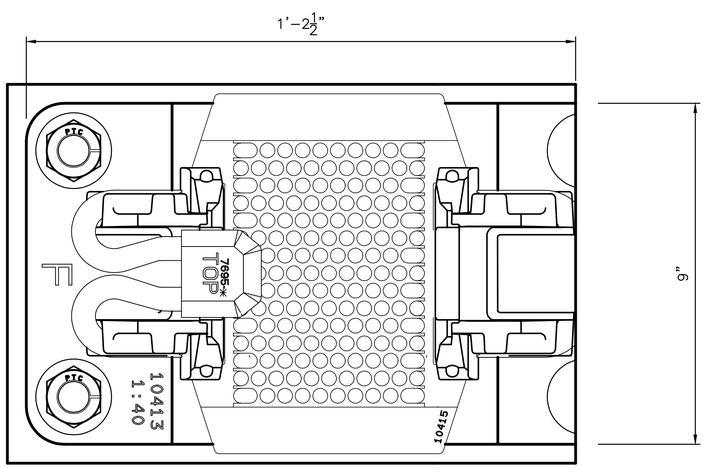

PLAN

NOTES

1. FOR MODIFIED PLATES, ONLY HALF THE NUMBER LISTED ARE REQUIRED FOR INSTALLATION.
2. FULL SIZED PLATES ARE TO BE SAW CUT AS REQUIRED.

MODIFIED DIRECT FIXATION FASTENER ASSEMBLY AT TRAINSTOPS

0 .125 .25 .5 .75 1
SCALE IN FEET

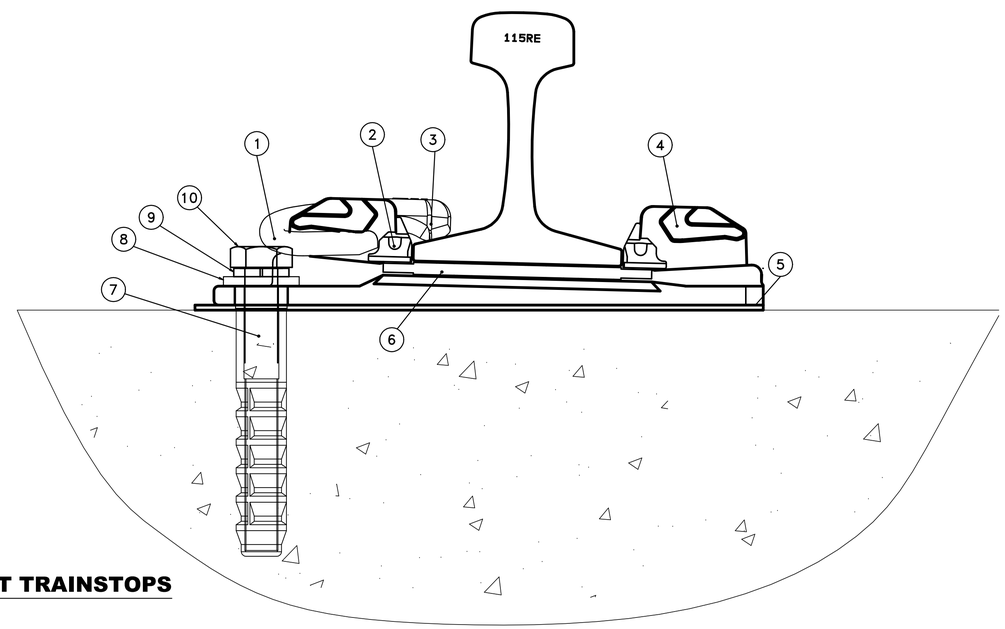

ELEVATION

REQ. No. 07DA7578

PORT AUTHORITY
TRANS-HUDSON CORPORATION

SYSTRA CONSULTING

ORIGINAL SIGNED AND SEALED BY:

PETER JAMES ALLIBONE, P.E.

NEW JERSEY LICENSE NO. 43077
NEW YORK LICENSE NO. 064770

No.	Date	Revision	Approved

ENGINEERING DEPARTMENT

TUNNELS E & F

CIVIL

Title
DOWNTOWN PATH RESTORATION PROGRAM – PHASE 1
TUNNELS E & F
TRACKWORK, CONTACT RAIL AND COMMUNICATIONS

DIRECT FIXATION FASTENER DETAILS

This drawing subject to conditions in Contract. All inventions, ideas, designs and methods herein are reserved to PATH and may not be used without its written consent.

IY	IY	JB
Designed by	Drawn by	Checked by

JULY 19, 2002
Date

PCP–100.000
Work Order Package #2 E F
Contract Number

CR11–104.120
Charge Code Number

C205
Drawing Number