Torres Rojas, Genara

FOI#12238

From: tcortelli@lsinjurylaw.com
Sent: Tuesday, March 29, 2011 5:00 PM
To: Van Duyne, Sheree
Cc: Torres Rojas, Genara; Duffy, Daniel
Subject: Freedom of Information Online Request Form

Information:

First Name: Terrence
Last Name: Cortelli, Esq.
Company: Lever & Stolzenberg, LLP
Mailing Address 1: 303 Old Tarrytown Road
Mailing Address 2:
City: White Plains
State: NY
Zip Code: 10603
Email Address: tcortelli@lsinjurylaw.com
Phone: 914-288-9191
Required copies of the records: Yes

List of specific record(s):
Any and all records, contracts, plans, and work orders pertaining to construction, remodeling, lead removal, painting and or related projects being carried out at the Port Authority Bus Terminal located at 625 8th Avenue, New York, NY 10036 during the months of June and July of 2010. Records should include all documentation related to work being performed by Fine Painting Decorating Co. Inc AND any additional company or general contractor on the exterior staircases located at the Port Authority and identified as follows: landing of the staircase between the fifth and sixth floor thereat, identified as follows: FHOS610FH09 on metal portion of door above glass bar code of BT4296 and SW6L-4 sticker posted on glass. Further, if available, please provide a copy of any incident reports and or video surveillance for an accident that occurred on said premises on the above referenced staircase on July 7, 2010.

THE PORT AUTHORITY OF NY & NJ

Daniel D. Duffy
FOI Administrator

August 18, 2011

Mr. Terrence Cortelli
Lever & Stolzenberg, LLP
303 Old Tarrytown Road
White Plains, NY 10603

Re: Freedom of Information Reference No. 12238

Dear Mr. Cortelli:

This is a response to your March 29, 2011 request, which has been processed under the Port Authority's Freedom of Information Policy (the "Policy," copy enclosed) for copies of various records related to lead removal, painting or remodeling at the Port Authority Bus Terminal between June 2010 and July 2010, and copies of incident reports or video surveillance related to an accident on July 7, 2010.

Material responsive to your request and available under the Policy, which consists of 707 pages, will be forwarded to your attention upon receipt of a photocopying fee of $176.75 (25¢ per page). Payment should be made in cash, certified check, company check or money order payable to "The Port Authority of New York & New Jersey" and should be sent to my attention at 225 Park Avenue South, 17th Floor, New York, NY 10003.

Certain material responsive to your request is exempt from disclosure pursuant to exemptions (2), (6) and (7) of the Policy.

We have searched our files and found no incident reports or videos responsive to your request.

Please refer to the above FOI reference number in any future correspondence relating to your request.

Sincerely,

Daniel D. Duffy
FOI Administrator

Enclosure

225 Park Avenue South
New York, , NY 10003
T: 212 435 3642 F: 212 435 7555

20 March 2009

VRH
CONSTRUCTION CORP.
General Contractors & Construction Managers

The Port Authority of NY & NJ
625 8th Avenue
South Wing / 2nd Floor
New York, NY 10018

Attention: Mr. Paul Salvatore, R.E.

Re: PANY/NJ – BT- 200.200
PABT Work Order No. #12 ~ SOUTH WING EMERGENCY STAIR REPAIR
VRH project number 2030-12
Approval Letter No. 012-04
Base Contract for Painting and Lead Abatement Work

Schedule: Approval requested by 1 April 2009

Dear Mr. Salvatore;

VRH requests your approval to award a subcontract for the Painting and Lead Abatement for Work Order No. 12 to Fine Painting & Decorating Co., Inc. in the amount of $ 372,000.00. Following are breakdown of the bids received for this work:

1. Fine Painting & Decorating Co., Inc. $ 372,000.00

VRH Construction's estimate for this work is $ 412,300.00. Our recommendation for award of this Contract is based on the apparent most responsive subcontractor with the lowest qualified price to perform the work.

The award of this package to Fine Painting & Decorating Co., Inc. is based on the following:

1. VRH has contacted the above contractor in order to conform the completeness of their scope of work and have compared /weighed the impact of inclusions or exclusions to the scope of work not specifically mentioned in this document.
2. Seven Painting Subcontractors including four with experience at this facility were solicited to bid this project. Two agreed to bid, one declined. Fine was the only bid received. We are recommending Fine because their price is well under our cost estimate and because, in our experience, they have never been underbid on a combined Lead Abatement & Painting project.
3. No Cost is included for PE Design of Scaffolding per General Note 5 on Drawing S001 and Structural Note 4 on Drawing G003. VRH has carried $11,500.00 for Consulting Services in our General Conditions to cover these costs if required. *

* To be added by PACC/CO when if required.
PSA
4/06/09

c/o The Port Authority of NY & NJ
625 Eighth Avenue, 2nd Floor North Wing
New York, NY 10018

Phone
212.629.6187
Fax
212.629.9243

VRH
CONSTRUCTION CORP.
General Contractors & Construction Managers

4. Lead Abatement quantities are based on the Port Authority Engineering Department Memorandum, with attachments, dated February 1, 2008. Subject: "SAMPLING FOR LEAD CONTAINED MATERIALS AT: PORT AUTHORITY BUS TERMINAL – SOUTH WING, STRUCTURAL REPAIR OF EMERGENCY STAIRS" "CHARGE CODE #: CT-06-04.504".
    a. In accordance with this Memorandum no abatement is figured for paint samples with lead contents of less than 0.5%.
    b. No Abatement is anticipated in Stair 'R' or Stair 'E'.
5. The Lead Abatement process involves applying a gel to the abatement area, covering it with paper and allowing it to stay for at least 24 hours. The gel itself is biodegradable and relatively benign.
    a. Once the gel is applied the stairway should remain closed, except for life-threatening emergencies, for at least one day, preferably two. The same requirement applies to freshly painted stairwells.
    b. Fine has allowed to Abate and Paint Stair 'C' and to Paint Stair 'R' on weekends when these stairs are normally closed.
6. Costs for insurance, as required by the contract, are included in the lump sum price above.
7. This Subcontractor excludes costs for filings normally done by Owners or/and Designers. Trade Normal Inspections and Certifications are included. VRH does not foresee a cost exposure associated with this item as on-site inspections are to be coordinated with and performed by PANYNJ-BT.
8. All work is to be performed during Work Hours as defined in the Contract Work Order Documents.

Please indicate your authorization for VRH to issue a contract to Fine Painting & Decorating Co., Inc. in the amount of $ 372,000.00 by executing and returning a copy of this Approval Letter to our office.

Very truly yours,
VRH Construction

Art Knowlton
Project Estimator

Port Authority of NY&NJ

Name L S A

Title Sa. R.E.

Date 4/7/9

AK: mm
cc: M. Curran, VRH
A. Carnabuci, VRH
J. Pointek, VRH

c/o The Port Authority of NY & NJ
625 Eighth Avenue, 2nd Floor North Wing
New York, NY 10018

Phone
212.629.6187
Fax
212.629.9243

Materials Engineering Unit

241 Erie Street, Room 234
Jersey City, NJ 07310
Tel: 201-216-2952 **Fax:** 201-216-2949

THE PORT AUTHORITY OF NY & NJ

TRANSMITTAL
No. 00009

PROJECT: WO12 South Wing Emerg. Stair Repairs

DATE: 6/16/2009

TO: VRH Construction Corp.
c/o Port Authority of NY & NJ
625 Eight Ave. 2nd Flr. North Bldg
New York, NY 10018

CONTRACT: PABT-200.200 WO12

ATTN: **Anthony Carnabuci**

	STATUS LEGEND:	
☐ Shop Drawings	Approved (APP)	New Item (NEW)
☑ Letter	Approved as Corrected (AAC)	Not Approved (NA)
☐ Prints	Approved as Noted (AAN)	Not Reviewed (NR)
☐ Change Order	For Record Only (FRO)	Review With Comments (RWC)
☐ Plans	For Your Information (FYI)	Review With No Comments (RWNC)
☐ Samples	Incomplete (INC)	Superseded (SUPS)
☐ Specifications		
☑ Other: Made from Submittal	☐ Attached ☐ Separate Cover Via: Mail	
	Review and Comment	

SUBMITTAL	REV.	DATE	DESCRIPTION	Remark	STATUS
03200-0002	R000	6/16/2009	Desc: ASTM A615 Grade 60 Rebar	#1	NA
04212-0002	R000	6/16/2009	Desc: 316/316L Stainless Steel	#1	NA

Remarks: 1. The stainless steel and rebar indicated in the contract drawings are acceptable for use. Final approval will be granted when mill test reports (MTR's) are submitted for review.

Approvals shall not relieve the Contractor of any responsibility as required by the Contract or waive any further authority of the Engineer or modify or wave any provision of the subject Contract with regard to this material(s) or its approval.

Material(s) which do not conform to the contract documents will be subject to rejection at the job site by the Resident Engineer.

If you have any questions, please call L. Krakowitch of my staff at (201)595-4668. Our fax number is (201)216-2949.

CC: P. Salvatore w/att., A. Kaprielian w/att.,
L. Krakowitch, MF

Signed:
Casimir Bognacki, P.E.
Chief of Materials Engineering

ARE	SEC	RE	ARE	OE	OE
	THE PORT AUTHORITY OF NY & NJ PABT ENGINEERING FIELD OFFICE				
	JUN 22 2009				
FILE					

Expedition ®

LETTER OF TRANSMITTAL

Action Key
1 For your records and/or use
2 For price quotation
3 For approval
4 Approved/Reviewed
5 Approved as noted: Re-submission not required
6 Approved as noted: Revise and re-submit
7 Rejected: Re-submit per contract documents

VRH CONSTRUCTION CORP.
General Contractors & Construction Managers

To	The Port Authority of NY & NJ	Transmittal No.	00003
	Two Gateway Center	Job No.	2030WO12
	15th Floor	Project	PANY/NJ-bt-200.200 WO 12
	Newark, NJ 07102		South Wing Emergency Stair Repairs
Attention	Ka Kei Chan		
Phone No.	973-792-4629 Fax 973-792-4602		

We are sending you herewith the following: ☒ Drawings ☒ Shop Drawings ☐ Samples ☐ Specifications ☒ Other:

Via: ☒ Attached ☐ Separate Cover Via Mail

Quantity	Drawing/Submittal No.	Description	Action
8	03730-002	Dwg: Title: SikaTop 123 Plus Desc: SikaTop 123 Plus – Dilip	3
8	~~03734~~-001	Dwg: Title: Sikaflex-1a Desc: Sikaflex-1a →	3
8	04212-001	Dwg: Title: #247 Screw-On Split Bend Anchor Desc: #247 Screw-On Split Bend Anchor Arch	3
8	[redacted]		3
8	04212-003	Dwg: Title: Z526 Heavy-Duty Drain Desc: Z526 Heavy-Duty Drain Arch	3
8	07115-001	Dwg: Title: Bituthene 5000 Desc: Bituthene 5000 – Dilip	3
8	07115-002	Dwg: Title: Bituthene Deck Prep Desc: Bituthene Deck Prep "	3
8	07115-003	Dwg: Title: Bituthene Liquid Membrane Desc: Bituthene Liquidf Membrane "	3
8	07115-004	Dwg: Title: Bituthene Mastic Desc: Bituthene Mastic "	3
8	02551-001	Dwg: Title: Detail #21 Deck w/Asphalt Conc. Desc: Detail #21 Deck W/Asphalt Conc. Arch	3
8	02551-002	Dwg: Title: Asphalt Cement (PG-64-22) Desc: Asphalt Cement (PG-64-22) – JV	3

Remarks:

cc: P. Salvatore; A. Kaprielian/PANYNJ

Signed

By

Date 5/26/2009

rec'd 5/28/09

625 Eighth Avenue
2nd Flr, North Building
New York, NY 10018

Phone
212-629-6187
Fax
212-629-9243

LETTER OF TRANSMITTAL

Action Key
1 For your records and/or use
2 For price quotation
3 For approval
4 Approved/Reviewed
5 Approved as noted: Re-submission not required
6 Approved as noted: Revise and re-submit
7 Rejected: Re-submit per contract documents

VRH CONSTRUCTION CORP.
General Contractors & Construction Managers

To	The Port Authority of NY & NJ	Transmittal No.	00003
	Two Gateway Center	Job No.	2030WO12
	15th Floor	Project	PANY/NJ-bt-200.200 WO 12
	Newark, NJ 07102		South Wing Emergency Stair Repairs
Attention	Ka Kei Chan		
Phone No.	973-792-4629 Fax 973-792-4602		

We are sending you herewith the followir ☒ Drawings ☒ Shop Drawings ☐ Samples ☐ Specifications ☒ Other:

Via: ☒ Attached ☐ Separate Cover Via Mail

Quantity	Drawing/Submittal No.	Description	Action
8	03200-001	Dwg: Title: Epcon C6 Red Head Desc: Epcon C6 Red Head -Dilip	3
8	[redacted]	[redacted]	3 -TW
8	03602-001	Dwg: Title: Grouting (Non-Metallic) Desc: SikaGrout 212	3
8	03602-002	Dwg: Title: Sika Mono Top 611 Desc: Sika Mono Top 611 } Dilip	3
8	03730-001	Dwg: Title: Sika Armatec 110 EpcCem Desc: Sika Armatec 110 EpoCem	3

Remarks:

cc: P. Salvatore; A. Kaprielian/PANYNJ

Signed Anthony Carnabuci (for)

By Anthony J. Carnabuci

Date 5/26/2009

625 Eighth Avenue
2nd Flr, North Building
New York, NY 10018

Phone
212-629-6187
Fax
212-629-9243

PRODUCT DATA BULLETIN

316/316L STAINLESS STEEL

UNS S31600 AND S31603

AK Steel

- Excellent Corrosion Resistance
- Good Elevated Temperature Strength
- Good Pitting Resistance

04212-002
200.200 W.O. 12

Applications Potential

Type 316 Stainless Steel is widely used in applications requiring corrosion resistance superior to Type 304, or good elevated temperature strength. Typical uses include exhaust manifolds, furnace parts, heat exchangers, jet engine parts, pharmaceutical and photographic equipment, valve and pump trim, chemical equipment, digesters, tanks, evaporators, pulp, paper and textile processing equipment, parts exposed to marine atmospheres and tubing. Type 316L is used extensively for weldments where its immunity to carbide precipitation due to welding assures optimum corrosion resistance.

Table of Contents

	Page
Applications Potential	1
Product Description	2
Composition	2
Available Forms	2
Metric Practice	2
Mechanical Properties	3
Physical Properties	4
Corrosion Resistance	5
Oxidation Resistance	5
Heat Treatments	5
Cold Working	5
Formability	5
Specifications	5
Weldability	5

The information and data in this product data bulletin are accurate to the best of our knowledge and belief, but are intended for general information only. Applications suggested for the materials are described only to help readers make their own evaluations and decisions, and are neither guarantees nor to be construed as express or implied warranties of suitability for these or other applications.

Data referring to mechanical properties and chemical analyses are the result of tests performed on specimens obtained from specific locations of the products in accordance with prescribed sampling procedures; any warranty thereof is limited to the values obtained at such locations and by such procedures. There is no warranty with respect to values of the materials at other locations.

AK Steel and the AK Steel logo are registered trademarks of AK Steel Corporation.

Type 316L is an extra-low carbon version of Type 316 that eliminates harmful carbide precipitation due to welding.

Composition

	Type 316 %	Type 316L %
Carbon	0.08 max.	0.03 max.
Manganese	2.00 max.	2.00 max.
Phosphorus	0.045 max.	0.045 max.
Sulfur	0.030 max.	0.03 max.
Silicon	0.75 max.	0.75 max.
Chromium	16.00 - 18.00	16.00 - 18.00
Nickel	10.00 - 14.00	10.00 - 14.00
Molybdenum	2.00 - 3.00	2.00 - 3.00
Nitrogen	0.10 max.	0.10 max.
Iron	Balance	Balance

Available Forms

AK Steel produces Types 316 and 316L Stainless Steels in thicknesses from 0.01" to 0.25" (0.25 to 6.35 mm) max. and widths up to 48" (1219 mm). For other thicknesses and widths, inquire.

Metric Practice

Values shown in this bulletin were established in U.S. customary units. The metric equivalents of U.S. customary units shown may be approximate. Conversion to the metric system, known as the International System of Units (SI), has been accomplished in accordance with ASTM E380.

The newton (N) has been adopted by the SI as the metric standard unit of force as discussed in the AISI Metric Practice Guide. The term for force per unit of area (stress) is the newton per square metre (N/m^2). Since this can be a large number, the prefix mega is used to indicate

1,000,000 units and the term meganewton per square metre (MN/m^2) is used. The unit (N/m^2) has been desig-

nated a pascal (Pa). The relationship between the U.S. and the SI units for stress is: 1000 pounds/in^2 = 1 kip/in^2 = 6.8948 meganewtons/m^2(MN/m^2) = 6.8948 megapascals (MPa).

Mechanical Properties

Table 1
Typical Room Temperature Properties

	UTS ksi (MPa)	0.2% YS ksi (MPa)	Elongation % in 2" (50.8 mm)	Hardness Rockwell
Type 316	84.0 (579)	42.0 (290)	50	B79
Type 316L	81.0 (558)	42.0 (290)	50	B79

Table 2
Elevated Temperature Properties

Temperature °F (°C)	UTS ksi (MPa)	0.2% YS ksi (MPa)	Elongation % in 2" (50.8 mm)
400 (204)	81.0 (558)	35.0 (241)	51
600 (316)	78.0 (538)	31.0 (214)	48
800 (427)	76.0 (524)	27.5 (190)	47
1000 (538)	70.0 (483)	24.0 (165)	44
1200 (649)	57.0 (393)	21.0 (145)	40
1400 (760)	35.0 (241)	18.0 (124)	37
1600 (871)	24.0 (165)	16.0 (110)	44

Table 3
Stress Rupture Properties

Test Temperature °F (°C)	Stress, ksi (MPa), for rupture in: 1,000 hours	10,000 hours	100,000 hours
1100 (593)	36.0 (248)	28.0 (193)	25.0 (172)
1200 (649)	24.0 (165)	16.5 (114)	13.5 (94)
1300 (704)	15.5 (106)	10.0 (69)	7.0 (48)
1400 (760)	10.0 (69)	6.0 (41)	3.5 (24)
1500 (816)	6.0 (41)	3.5 (24)	2.0 (14)
1600 (871)	3.5 (24)	– –	– –

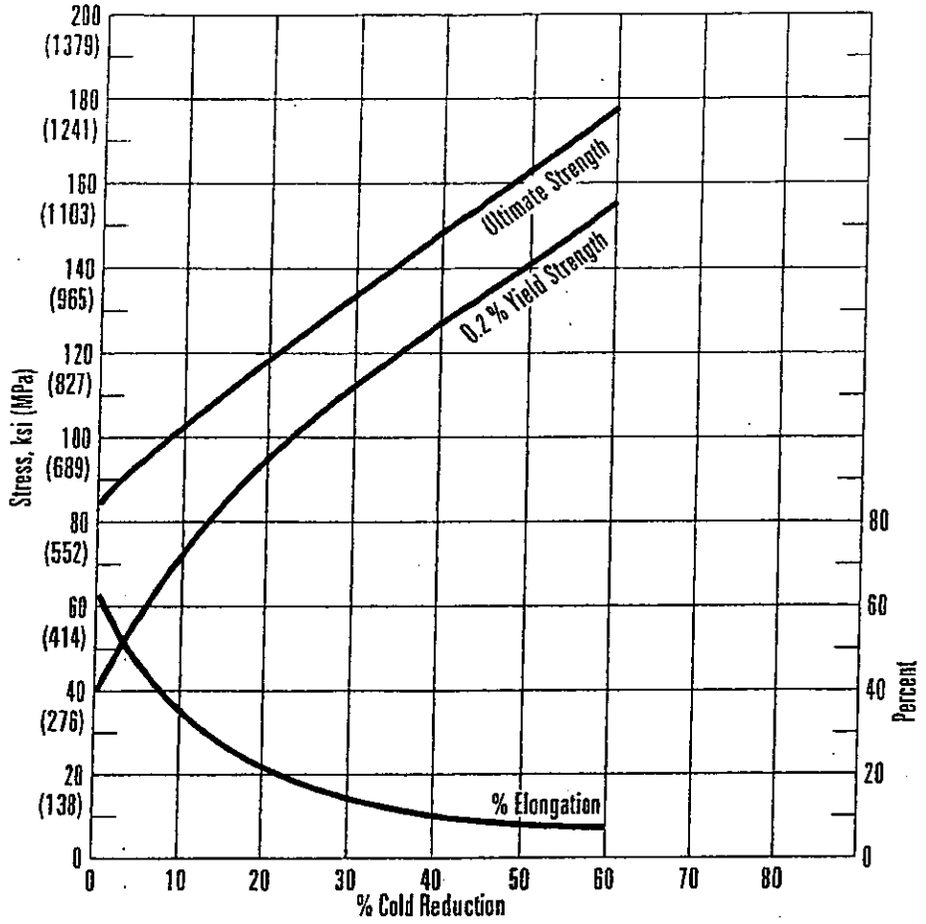

Physical Properties

Density, 0.29 lbs/in^3
7.99 g/cm^3

Electrical Resistivity, microhm-in (microhm-cm)
68°F (20°C) – 29.4 (74)

Specific Heat, BTU/lb/°F (kJ/kg • K)
32 - 212°F (0-100°C) – 0.12 (0.50)

Thermal Conductivity, BTU/hr/ft^2/ft/°F (W/m • K)
at 212°F (100°C) – 9.4 (16.2)
at 932°F (500°C) – 12.4 (21.4)

Mean Coefficient of Thermal Expansion,
in/in/°F(µm/m • K)
32 - 212°F (0 - 100°C) – 8.9 x 10^{-6} (16.0)
32 - 600°F (0 - 315°C) – 9.0 x 10^{-6} (16.2)
32 - 1000°F (0 - 538°C) – 9.7 x 10^{-6} (17.5)
32 - 1200°F (0 - 649°C) –10.3 x 10^{-6} (18.5)
32 - 1500°F (0 - 871°C) –11.1 x 10^{-6} (19.9)

Modulus of Elasticity, ksi (MPa)
28.0 x 10^3 (193 x 10^3) in tension
11.2 x 10^3 (77 x 10^3) in torsion

Magnetic Permeability, H = 200 Oersteds
Annealed – 1.02 max.

Melting Range, °F (°C) – 2500 - 2550 (1371 - 1399)

Corrosion Resistance

Types 316 and 316L Stainless Steels exhibit better corrosion resistance than Type 304. They provide excellent resistance to pitting type corrosion such as encountered in a sea coast environment. They also provide good resistance to most chemicals involved in the paper, textile and photographic industries. They are particularly useful in one to five percent sulfuric acid solutions up to 150°F (66°C) as well as acetic, phosphoric, formic and tartaric acids, and in certain chloride, bromide and iodide solutions.

Oxidation Resistance

The maximum temperature to which Types 316 and 316L can be exposed continuously without appreciable scaling is about 1700°F (927°C). For intermittent exposure, the maximum exposure temperature is about 1600°F (871°C).

Heat Treatments

Types 316 and 316L are non-hardenable by heat treatment.

Annealing: Heat to 1900 - 2100°F (1038 - 1149°C), then rapidly quench.

Cold Working

Due to the higher nickel content, these grades work harden at a lower rate than Type 304. In the annealed condition, they exhibit excellent ductility and may be readily roll formed, deep drawn, and bent. Annealing is essential to restore ductility and to lower hardness for subsequent forming operations. Severely formed parts should be annealed to remove stresses.

Formability

Types 316 and 316L can be readily formed and drawn.

Specifications

Types 316 and 316L Stainless Steel sheet and strip are covered by the following specifications:

Type 316	Type 316L
AMS 5524	AMS 5507
ASTM A 240	ASTM A 240
QQ-S-766	QQ-S-766
MIL-S-5059	

Weldability

The austenitic class of stainless steels is generally considered to be weldable by the common fusion and resistance techniques. Special consideration is required to avoid weld "hot cracking" by assuring formation of ferrite in the weld deposit. These particular alloys are generally considered to have poorer weldability than Types 304 and 304L. A major difference is the higher nickel content for these alloys which requires slower arc welding speed and more care to avoid hot cracking. When a weld filler is needed, AWS E/ER 316L and 16-8-2 are most often specified. Types 316 and its low-carbon "L" version are well known in reference literature and more information can be obtained in the following ways:

1. ANSI/AWS A5.9, A5.22, and A5.4 (filler metals, minimum UTS and elongation)
2. "Welding of Stainless Steels and Other Joining Methods," SSINA, (800:982-0355)
3. "Welding Stainless Steels," FDB #SF-71
4. ANSI/AWS B2.1.009-90 [GTAW 300's @ .050" - 0.14"]
5. ANSI/AWS B2.1-8-024-94 [GTAW 300's @ 1/8" - 1-1/2"]
6. ANSI/AWS B2.1.013-91 [SMAW 300's .050" - 0.14"]
7. ANSI/AWS B2.1-8-023-94 [SMAW 300's @ 1/8" - 1-1/2"]
8. ANSI/AWS B2.1.005-90 [GMAW 300's @ .050" - 0.14"]

03200-002

200.200 W.O. 12

US Metric Chart ASTM A615 Grade 60 Rebar
60 KSI Yield 90 KSI Tensile

Rebar Diameter in. (mm)	Drill Diameter in. (mm)	Embedment Depth Develop 1.25 x Yield in. (mm)	Embedment Depth Develop Tensile in. (mm)	Rebar Yield lb. (kn)	Rebar Tensile lb. (kn)
4 (13)	5/8 (15.9)	5 (127)	6 (152)	12000 (53.4)	18000 (80.1)
5 (16)	3/4 (19.1)	6 (152)	7 (178)	18600 (82.7)	27900 (124.1)
6 (19)	7/8 (22.2)	8 (203)	9 (229)	26400 (117.4)	39600 (176.1)
7 (22)	1 1/8 (28.6)	9 (229)	10 (254)	36000 (160.1)	54000 (240.2)
8 (25)	1 1/4 (31.8)	10 (245)	12 (305)	47400 (210.8)	71100 (316.3)
9 (29)	1 3/8 (34.9)	12 (305)	14 (356)	60000 (266.9)	90000 (400.3)
10 (32)	1 1/2 (38.1)	14 (356)	16 (407)	79200 (352.3)	114300 (508.4)
11 (36)	1 5/8 (41.2)	15 (381)	17 (432)	93600 (416.3)	140400 (624.5)
14 (43)	2 (50.8)	20 (508)	22 (559)	135000 (600.5)	202500 (900.8)
18 (57)	2 1/2 (63.5)	24 (610)	26 (661)	240000 (1067.6)	360000 (1601.4)

Steel Strength ASTM A615 Grade 60 Rebar (Plain or Epoxy Coated)
Yield = Fy x Tensile Stress Area
Tensile = Ft x Tensile Stess Area
Shear = .50 x Ultimate Steel Strength

Based on 3500 psi or greater compressive strength concrete 28 days old.

All values based on properly installed Keligrout/Keligrout 101-p per Technical Data Sheets

Materials Engineering Unit

241 Erie Street, Room 234
Jersey City, NJ 07310
Tel: 201-216-2952 **Fax:** 201-216-2949

THE PORT AUTHORITY OF NY & NJ

TRANSMITTAL
No. 00012

PROJECT: WO12 South Wing Emerg. Stair Repairs

DATE: 6/26/2009

TO: VRH Construction Corp.
c/o Port Authority of NY & NJ
625 Eight Ave. 2nd Flr. North Bldg
New York, NY 10018

CONTRACT: PABT-200.200 WO12

ATTN: **Anthony Carnabuci**

	STATUS LEGEND:	
☐ Shop Drawings	Approved (APP)	New Item (NEW)
☑ Letter	Approved as Corrected (AAC)	Not Approved (NA)
☐ Prints	Approved as Noted (AAN)	Not Reviewed (NR)
☐ Change Order	For Record Only (FRO)	Review With Comments (RWC)
☐ Plans	For Your Information (FYI)	Review With No Comments (RWNC)
☐ Samples	Incomplete (INC)	Superseded (SUPS)
☐ Specifications		
☑ Other: Made from Submittal	☐ Attached ☐ Separate Cover Via: Mail	
Review and Comment		

SUBMITTAL	REV.	DATE	DESCRIPTION	Remark	STATUS
02551-0001A	R000	6/26/2009	Desc: I-5A Top Course (3% Marshall Air Voids) PG64-22 (Section 02551), Flushing Asphalt, LLC, Drum Plant, Flushing NY	#1	AAN
02551-0002	R000	6/26/2009	Desc: Asphalt Cement PG64-22 (Section 02551), NuStar Refining, LLC, Thorofare NJ		APP

Remarks: 1. The Asphalt cement content shall be raised from 5.8% to 6.0% to decrease Marshall air voids to a target of 3%.

Approvals shall not relieve the Contractor of any responsibility as required by the Contract or waive any further authority of the Engineer or modify or waive any provision of the subject Contract with regard to this material(s) or its approval.

Material(s), which do not conform to the contract documents, will be subject to rejection at the job site by the Resident Engineer.

If you have any questions, please call John Varrone of my staff at (201) 216-2976. Our fax number is (201) 216-2949.

CC: P. Salvatore w/att., A. Kaprielian w/att., J. Varrone, MF

Signed:
Casimir Bognacki, P.E.
Chief of Materials Engineering

Expedition ®

JUL 01 2009

THE PORT AUTHORITY OF NY & NJ
ENGINEERING DEPARTMENT - MATERIALS ENGINEERING DIVISION
SUBMITTED ASPHALT CONCRETE JOB MIX FORMULA

JOB DESCRIPTION: The Port Authority Bus Terminal - South Wing Emergency Stair Repairs
CONTRACT #: BT-200.001 (T06-984.217)
SUBMITTAL #: 02551 - 001A
MIX TYPE: I-5A Top Course (3% Marshall Air Voids) PG64-22 (Section 02551)
CONTRACTOR: VRH Construction Corp. (Sub: Carullo Construction Corp.)
SUPPLIER: Flushing Asphalt, L.L.C. LOCATION: Flushing, NY
PLANT TYPE: Drum Plant
LOT SIZE: A Day's Production (300 Tons Minimum, 2000 Tons Maximum)(Mat & Joint Cores)
PAYMENT SHEET: Marshall Air Void And In-Place Density Deduction (Compensation In Excess Of 100 %) (PA 3597A, 7-95)
First sublot can be excluded from M.A.V. payment computation, if mix was not produced during preceding 24 hours.

JOB MIX FORMULA GRADATION (% PASSING)

SIEVE SIZE	J.M.F. GRAD.	GENERAL SPEC.	ACTION LIMITS	SUSPENSION LIMITS
1 1/4"	100.0	100.0 - 100.0	100.0 - 100.0	100.0 - 100.0
1"	100.0	100.0 - 100.0	100.0 - 100.0	100.0 - 100.0
3/4"	100.0	100.0 - 100.0	100.0 - 100.0	100.0 - 100.0
1/2"	99.6	100.0 - 100.0	100.0 - 100.0	100.0 - 100.0
3/8"	91.7	80.0 - 100.0	88.0 - 96.0	83.0 - 100.0
# 4	59.7	55.0 - 85.0	56.0 - 64.0	51.0 - 69.0
# 8	37.3	32.0 - 42.0	33.0 - 41.0	29.5 - 44.5
# 16	27.3	20.0 - 30.0	23.0 - 31.0	19.5 - 34.5
# 30	20.2	12.0 - 22.0	16.0 - 24.0	12.5 - 27.5
# 50	14.2	7.0 - 16.0	11.0 - 17.0	9.5 - 18.5
# 100	8.0	3.0 - 12.0	6.0 - 10.0	5.0 - 11.0
# 200	4.1	2.0 - 6.0	2.0 - 6.0	1.0 - 7.0
ASPHALT CEMENT	6.00	5.8 - 6.5 Extraction	5.7 - 6.3	5.3 - 6.7

MARSHALL CRITERIA

	DESIGN	DESIGN REQUIREMENTS	PRODUCTION REQUIREMENTS
STABILITY	2843	2150 Minimum	1800 Minimum
FLOW	10.3	8.0 - 16.0	8.0 - 16.0
AIR VOIDS (%)	4.2	2.3 - 3.7	1.5 - 4.5
VOIDS FILLED WITH ASPHALT (%)	77.0	70.0 - 80.0	70.0 - 80.0
VOIDS IN MINERAL AGGREGATE (%)	18.1	16.0 Minimum	16.0 Minimum
IN-PLACE DENSITY (%)			96.3
IN-PLACE JOINT DENSITY (%)			93.3

MATERIAL SOURCES

TYPE & SIZE	J.M.F. %	MANUFACTURER / LOCATION	APPROVED
ASTM # 8 - 3/8" STONE	26.2%	Tilcon NY Inc., Mt. Hope, NJ	Yes
ASTM # 9 - 1/4" STONE	30.0%	Tilcon NY Inc., Mt. Hope, NJ	Yes
ASTM # 10 - SCREENINGS	18.9%	Tilcon NY Inc., Mt. Hope, NJ	Yes
ASTM C-33 - STONE SAND	18.9%	Tilcon NY Inc., Mt. Hope, NJ	Yes
FILLER - RECLAIMED FINES		Tilcon NY Inc., Mt. Hope, NJ	Yes
AC - PG64-22	6.00%	NuStar Refining, LLC., Bayonne, NJ	Yes

MIX TEMPERATURE LEAVING PLANT: 275 - 325 Degrees F
MARSHALL COMPACTION TEMPERATURE: 275 - 295 Degrees F

REMARKS: The Asphalt cement content shall be raised from 5.8% to 6.0% to decrease Marshall air voids to a target of 3%. The approval is based upon the satisfactory performance of the Job Mix Formula on Contract Number BT-200.001 Work Order # 12. The final acceptance will be based upon the satisfactory performance of the Job Mix Formula during the first day of plant production.

JOB MIX FORMULA: Approved As Noted

DATE: 6/25/09

John Varrone
ASPHALT LABORATORY SUPERVISOR

THE PORT AUTHORITY OF NY & NJ
ENGINEERING DEPARTMENT - MATERIALS ENGINEERING DIVISION
SUBMITTED ASPHALT CEMENT TACK COAT

JOB DESCRIPTION:	The Port Authority Bus Terminal - South Wing Emergency Stair Repairs
CONTRACT #:	BT-200.200 Work Order # 12 (CA03-184.018)
SUBMITTAL #:	02551 - 002
TACK COAT:	PG64-22 Asphalt Cement Tack Coat (Section 02551)
CONTRACTOR:	VRH Construction Corp. (Sub: Carullo Construction Corp.)
SUPPLIER:	NuStar Refining, LLC., Thorofare, NJ

REMARKS: The submitted PG64-22 Asphalt Cement Tack Coat conforms to contract specifications.

ASPHALT CEMENT TACK COAT: Approved

DATE: 6/11/09

ASPHALT LABORATORY SUPERVISOR

LETTER OF TRANSMITTAL

Action Key
1 For your records and/or use
2 For price quotation
3 For approval
4 Approved/Reviewed
5 Approved as noted: Re-submission not required
6 Approved as noted: Revise and re-submit
7 Rejected: Re-submit per contract documents

VRH CONSTRUCTION CORP.
General Contractors & Construction Managers

To	The Port Authority of NY & NJ	Transmittal No.	00003
	Two Gateway Center	Job No.	2030WO12
	15th Floor	Project	PANY/NJ-bt-200.200 WO 12
	Newark, NJ 07102		South Wing Emergency Stair Repairs
Attention	Ka Kei Chan		
Phone No.	973-792-4629 Fax 973-792-4602		

We are sending you herewith the followir ☒ Drawings ☒ Shop Drawings ☐ Samples ☐ Specifications ☒ Other:

Via: ☒ Attached ☐ Separate Cover Via Mail

Quantity	Drawing/Submittal No.	Description	Action
8	03730-002	Dwg: Title: SikaTop 123 Plus Desc: SikaTop 123 Plus – Dilip	3
8	~~03734-001~~	Dwg: Title: Sikaflex-1a Desc: Sikaflex-1a →	3
8	04212-001	Dwg: Title: #247 Screw-On Split Bend Anchor Desc: #247 Screw-On Split Bend Anchor Arch	3
8	04212-002	Dwg: Title: 316/316L Stainless Steel Desc: 316/316L Stainless Steel – PW	3
8	04212-003	Dwg: Title: Z526 Heavy-Duty Drain Desc: Z526 Heavy-Duty Drain Arch	3
8	07115-001	Dwg: Title: Bituthene 5000 Desc: Bituthene 5000 – Dilip	3
8	07115-002	Dwg: Title: Bituthene Deck Prep Desc: Bituthene Deck Prep "	3
8	07115-003	Dwg: Title: Bituthene Liquid Membrane Desc: Bituthene Liquidf Membrane "	3
8	07115-004	Dwg: Title: Bituthene Mastic Desc: Bituthene Mastic "	3
8	02551-001A	Dwg: Title: Detail #21 Deck w/Asphalt Conc. Desc: Detail #21 Deck W/Asphalt Conc. Arch	3
8	[illegible]	Dwg: Title: Asphalt Cement (PG 64-22) Desc: Asphalt Cement (PG 64-22)	3

Remarks:

cc: P. Salvatore; A. Kaprielian/PANYNJ

Signed

By

Date 5/26/2009

rec. 5/28/09

625 Eighth Avenue
2nd Flr, North Building
New York, NY 10018

Phone
212-629-6187
Fax
212-629-9243

LETTER OF TRANSMITTAL

Action Key
1 For your records and/or use
2 For price quotation
3 For approval
4 Approved/Reviewed
5 Approved as noted: Re-submission not required
6 Approved as noted: Revise and re-submit
7 Rejected: Re-submit per contract documents

VRH CONSTRUCTION CORP.
General Contractors & Construction Managers

To	The Port Authority of NY & NJ	Transmittal No.	00003
	Two Gateway Center	Job No.	2030WO12
	15th Floor	Project	PANY/NJ-bt-200.200 WO 12
	Newark, NJ 07102		South Wing Emergency Stair Repairs
Attention	Ka Kei Chan		
Phone No.	973-792-4629 Fax 973-792-4602		

We are sending you herewith the followir ☒ Drawings ☒ Shop Drawings ☐ Samples ☐ Specifications ☒ Other:

Via: ☒ Attached ☐ Separate Cover Via Mail

Quantity	Drawing/Submittal No.	Description	Action
8	03200-001	Dwg: Title: Epcon C6 Red Head Desc: Epcon C6 Red Head -Dilip	3
8	03200-002	Dwg: Title: ASTM A615 Grade 60 Rebar Desc: ASTM A615 Grade 60 Rebar Material & Structural	3 -FW
8	03602-001	Dwg: Title: Grouting (Non-Metallic) Desc: SikaGrout 212	3
8	03602-002	Dwg: Title: Sika Mono Top 611 Desc: Sika Mono Top 611 } Dilip	3
8	03730-001	Dwg: Title: Sika Armatec 110 EpcCem Desc: Sika Armatec 110 EpoCem	3

Remarks:

cc: P. Salvatore; A. Kaprielian/PANYNJ

Signed [signature]

By Anthony J. Carnabuci

Date 5/26/2009

625 Eighth Avenue
2nd Flr, North Building
New York, NY 10018

Phone
212-629-6187
Fax
212-629-9243

Asphalt Cement, All Grades
Material Safety Data Sheet

NuStar Asphalt Refining, LLC
204 Grove Avenue
Thorofare, NJ 08086-2557

MSDS No. ASPLT
Revision Date 3/16/2006

IMPORTANT: Prepared in accordance with 29 CFR 1910.1200. Read this MSDS before handling or disposing of this product and pass this information on to employees, customers and users of this product.

Hazard Rankings

	HMIS	NFPA
Health Hazard	* 2	1
Fire Hazard	1	1
Reactivity	0	0

* = Chronic Health Hazard

Emergency Overview

Physical State: Liquid.
Color: Brown to black. Odor: Characteristic, sour, tar-like odor.

WARNING:
Hot product can cause burns to skin. If burned by hot product, cool affected area immediately with cool water. Do not attempt to remove solidified material from skin. Seek medical attention immediately.
Hot asphalt can release toxic Hydrogen Sulfide gas (H2S)! Hydrogen Sulfide can accumulate in vapor space of tanks and vessels during transfer and storage of this material.
Water contact can cause a violent eruption of hot asphalt
Fumes from hot product can cause irritation to the eyes, skin, and respiratory system.

Protective Equipment

Minimum Recommended
See Section 8 for Details
This recommendation reflects minimum PPE when product is at elevated temperatures.

SECTION 1. PRODUCT IDENTIFICATION

Trade Name	Asphalt Cement, All Grades	Technical Contact	(856) 224-7409
Product Number	Various	Medical Emergency	(832) 486-4700
CAS Number	Mixture.	CHEMTREC Emergency (United States Only)	(800) 424-9300
Product Family	Asphalt Products.		

Synonyms: Performance Graded Asphalt (unmodified) PG 52-28 (15262), PG 52-34 (15253), PG 58-22 (15254), PG 58-28 (15259), PG 64-22 (15264), PG 64-28 (15266), PG 67-22 (15268), and PG 70-22 (15270). Penetration Graded Asphalt (unmodified) 40/50, 60/70 (15044), 85/100 (15871), 135/145 (15045), 180/200 (15026), and 200 (15026). Asphalt Cement AC 5 (15050), AC 10 (15100), AC 20 (15407), AC 30 (15300) and AC 40 (15301). [redacted] (15858), L-619 Roofers Flux (15805), Industrial Asphalt, Bitumen, Asphalt Flux (15040), Bituminous Oil (15031), Recycling Agent RA 500 (15033), RA 1000 (15260), RA 1500 (15261).

SECTION 2. COMPOSITION

Component Name(s)	CAS Registry No.	Concentration (%)
Asphalt	8052-42-4	88 - 100
Proprietary Process Oils	Mixture.	0 - 10
Proprietary amine complex antistrip additive	Mixture.	0 - 1

02551-002
200.200 W.O. 12

SECTION 3. HAZARDS IDENTIFICATION

Also see Emergency Overview and Hazard Ratings on the top of Page 1 of this MSDS.

Major Route(s) of Entry Skin contact. Inhalation.

Signs and Symptoms of Acute Exposure

Inhalation	No significant adverse health effects are expected to occur upon short-term exposure to this product at ambient temperatures. Breathing heated mist or vapor can irritate the mucous membranes of the nose, throat, bronchi, and lungs. Hydrogen sulfide (H_2S) can evolve when this product is stored or handled at elevated temperatures. H_2S can cause respiratory irritation and hypoxia. At low concentrations, H_2S has an odor of rotten eggs. At higher concentrations, H_2S odor is not apparent. At concentrations above 500 ppm, H_2S causes unconsciousness and death by respiratory paralysis. The National Institute for Occupational Safety and Health has determined that atmospheres containing 100 ppm or more of H_2S are immediately dangerous to life and health.
Eye Contact	Hot material can cause burns to the eye. This material can cause eye irritation with tearing, redness, or a stinging or burning feeling. Effects may become more serious with repeated or prolonged contact.
Skin Contact	Hot material can cause burns to the skin. May cause skin irritation with redness, an itching or burning feeling, and swelling of the skin. Effects may become more serious with repeated or prolonged contact. Skin contact may cause harmful effects in other parts of the body.
Ingestion	Contact with hot material may cause thermal burns. If swallowed at ambient temperatures, no significant adverse health effects are anticipated. If swallowed in large quantities, this material can obstruct the intestine.
Chronic Health Effects Summary	This material, or a component of this material, has been shown to cause cancer in laboratory animals. The relevance of this to humans is not clear. See Toxicological Information (Section 11)
Conditions Aggravated by Exposure	Disorders of the following organs or organ systems that may be aggravated by significant exposure to this material or its components include: Skin, Respiratory System, Kidneys, Central Nervous System (CNS)
Target Organs	Contains material which may cause damage to the following organs: kidneys, liver, upper respiratory tract, skin, eye, lens or cornea
Carcinogenic Potential	Certain preparations of this material are classified as carcinogenic by OSHA, NTP, or IARC. See Section 11 of this MSDS for additional information concerning the carcinogenic potential of this product.

OSHA Hazard Classification is indicated by an "X" in the box adjacent to the hazard title. If no "X" is present, the product does not exhibit the hazard as defined in the OSHA Hazard Communication Standard (29 CFR 1910.1200).

OSHA Health Hazard Classification				OSHA Physical Hazard Classification					
Irritant	X	Sensitizer		Combustible		Explosive		Pyrophoric	
Toxic		Highly Toxic		Flammable		Oxidizer		Water-reactive	
Corrosive		Carcinogenic		Compressed Gas		Organic Peroxide		Unstable	

SECTION 4. FIRST AID MEASURES

Take proper precautions to ensure your own health and safety before attempting rescue or providing first aid. For more specific information, refer to Exposure Controls and Personal Protection in Section 8 of this MSDS.

Inhalation	Move victim to fresh air. If victim is not breathing, immediately begin rescue breathing. If breathing is difficult, 100 percent humidified oxygen should be administered by a qualified individual. Seek medical attention immediately. Keep the affected individual warm and at rest.
Eye Contact	Check for and remove contact lenses. Flush eyes with cool, clean, low-pressure water while occasionally lifting and lowering eyelids. Seek medical attention if excessive tearing, redness, or pain persists.
Skin Contact	If burned by hot material, cool skin by quenching with large amounts of cool water. For contact with product at ambient temperatures, remove contaminated shoes and clothing. Wipe off excess material. Wash exposed skin with mild soap and water. Seek medical attention if tissue appears damaged or if pain or irritation persists. Thoroughly clean contaminated clothing before reuse. Discard contaminated leather goods. If material is injected under the skin, seek medical attention immediately.
Ingestion	Do not induce vomiting unless directed to by a physician. Do not give anything to drink unless directed to by a physician. Never give anything by mouth to a person who is not fully conscious. If significant amounts are swallowed or irritation or discomfort occurs, seek medical attention immediately.
Notes to Physician	SKIN: Hot material may cause skin burns. Immerse skin covered with hot material in cool water to limit tissue damage and prevent spread of liquid product. Consider leaving cooled material on skin unless contraindicated by contamination or potential for tattooing. If removal is necessary, mineral oil may be of assistance in minimizing skin loss when removing cool, hardened asphalt. EYES: Hot material may cause burns to the eyes. Early ophthalmologic evaluation is recommended. INGESTION: Check for possible bowel obstruction with ingestion of large quantities of material.

SECTION 5. FIRE FIGHTING MEASURES

NFPA Flammability Classification	NFPA Class-IIIB combustible material.
Flash Point	Open cup: >232°C (>450°F).
Lower Flammable Limit	No data. **Upper Flammable Limit** No data.
Autoignition Temperature	Not available.
Hazardous Combustion Products	Carbon dioxide, carbon monoxide, smoke, fumes, unburned hydrocarbons and oxides of sulfur and/or nitrogen. Hydrogen sulfide and other sulfur-containing gases can evolve from this product particularly at elevated temperatures.
Special Properties	Fight the fire from a safe distance in a protected location. Cool surface with water fog. Molten material can form flaming droplets if ignited. Water or foam can cause frothing. Use of water on product above 100° C (212° F) can cause product to expand with explosive force. Do not allow liquid runoff to enter sewers or public waters.
Extinguishing Media	Use dry chemical, foam, Carbon Dioxide or water fog.

Protection of Fire Fighters

Firefighters must use full bunker gear including NIOSH-approved positive pressure self-contained breathing apparatus to protect against potential hazardous combustion or decomposition products and oxygen deficiencies. Withdraw immediately from the area if there is a rising sound from a venting safety device or discoloration of vessels, tanks, or pipelines.

SECTION 6. ACCIDENTAL RELEASE MEASURES

Take proper precautions to ensure your own health and safety before attempting spill control or clean-up. For more specific information, refer to the Emergency Overview on Page 1, Exposure Controls and Personal Protection in Section 8 and Disposal Considerations in Section 13 of this MSDS.

Remove all potential ignition sources. Administer appropriate first aid as needed. Verify that responders are properly HAZWOPER-trained and wearing appropriate protective equipment during cleanup operations. Isolate the area of the spill and restrict access. For small spills, remove released material with shovels and place into containers for disposal. For large spills, evacuate area immediately. Evaluate potential exposure to response personnel. Respiratory protection may be required. Use protective clothing. Dike far ahead of a liquid spill to ensure complete collection. Do not allow free liquids to enter drains, sewers, ground water, drainage ditches or surface waters. This material is heavier than water. Releases to surface waters will sink. Report releases in accordance with local, state and federal requirements. Some releases must be reported to the National Response Center (800/424-8802).

SECTION 7. HANDLING AND STORAGE

Handling

Use normal precautions when handling hot, molten liquid solutions. Do not breathe fumes or vapor from heated material. Do not allow hot material to contact skin. Wash thoroughly after handling.

Storage

Materials represented by this MSDS are classified as NFPA Class III B combustible liquid. Generally, storage temperatures of 350 °F or below are recommended in cone roof storage tanks to minimize the formation of pyrophoric sulfides and carbonaceous deposits on the tank roof and appurtenant structures. Consult API Recommended Practice 2023 for additional guidance. Store distant from fire and ignition sources. Consult appropriate federal, state and local authorities before reusing, reconditioning, reclaiming, recycling or disposing of empty containers or waste residues of this product.

SECTION 8. EXPOSURE CONTROLS AND PERSONAL PROTECTION

Engineering Controls

Engineering controls are normally required when handling hot materials. Use process enclosures, local exhaust ventilation, or other controls to maintain airborne levels below recommended exposure limits (see below). Engineering controls should meet applicable requirements of the National Electrical Code (NEC) Standards. Ensure that an emergency eye wash station and safety shower are located near the work-station.

Personal Protective Equipment

Personal protective equipment should be selected based upon the conditions under which this material is used. A hazard assessment of the work area for PPE requirements should be conducted by a qualified professional pursuant to OSHA regulations. The following pictograms represent the minimum requirements for personal protective equipment. For certain operations, additional PPE may be required.

This recommendation reflects minimum PPE when product is at elevated temperatures.

Eye Protection

	Use a full-face shield and chemical safety goggles if handling heated material. With product at ambient temperatures, safety glasses equipped with side shields are recommended as minimum protection in industrial settings. Keep a suitable eye wash station immediately available to the work area.
Hand Protection	When handling product at elevated temperatures, use long-cuffed leather or heat-resistant gloves. When product is at ambient temperatures, use gloves constructed of chemical resistant materials such as heavy nitrile rubber if frequent or prolonged contact is expected.
Body Protection	Prevent skin contact when handling heated material. Use insulated, heat-resistant clothing such as a chemical resistant apron or slicker suit. Use a full-body heat-resistant or internally cooled suit when work conditions dictate.
Respiratory Protection	Contaminant air concentrations determine the level of respiratory protection required. Use only NIOSH-approved respiratory equipment within the limits of the protection factors for that equipment. Use supplied air respirators when H_2S concentrations are expected to exceed applicable workplace exposure levels. Do not use air purifying respiratory equipment when considering elevated H_2S concentrations. Respiratory equipment must be selected on the basis of the maximum expected air concentration.
General Comments	Use good personal hygiene practices. Wash hands and other exposed skin areas with plenty of mild soap and water before eating, drinking, smoking, use of toilet facilities, or leaving work. DO NOT use gasoline, kerosene, solvents, or harsh abrasive skin cleaners.

Occupational Exposure Guidelines

Substance	**Applicable Workplace Exposure Levels**
Asphalt	**ACGIH TLV (United States).** TWA: 0.5 mg/m³ 8 hour(s).
Hydrogen Sulfide	**ACGIH TLV (United States).** TWA: 10 ppm 8 hour(s). STEL: 15 ppm 15 minute(s). **OSHA (United States).** CEIL: 20 ppm 8 hour(s). STEL: 50 ppm 15 minute(s). Form: *10 minute peak; once per 8 hour shift

SECTION 9. PHYSICAL AND CHEMICAL PROPERTIES (TYPICAL)

Physical State	Liquid.	**Color**	Brown to black.	**Odor**	Characteristic, sour, tar-like odor.
Specific Gravity	>1 (Water = 1)	**pH**	Not Applicable.	**Vapor Density**	>1 (Air = 1)
Boiling Range	IBP: AP 400° C (AP 752° F))			**Melting/Freezing Point**	Not available.
Vapor Pressure	Not available.			**Volatility**	Negligible volatility.
Solubility in Water	Insoluble in cold water.			**Viscosity (cSt @ 40°C)**	not available
Flash Point	Open cup: >232°C (>450°F).				
Additional Properties	No additional information.				

SECTION 10. STABILITY AND REACTIVITY

Chemical Stability Stable. **Hazardous Polymerization** Not expected to occur.

Conditions to Avoid Keep away from extreme heat, strong acids and strong oxidizing conditions.

Materials Incompatibility Strong oxidizers.

Hazardous Decomposition Products No additional hazardous decomposition products were identified other than the combustion products identified in Section 6 of this MSDS.

SECTION 11. TOXICOLOGICAL INFORMATION

For other health-related information, refer to the Emergency Overview on Page 1 and the Hazards Identification in Section 3 of this MSDS.

Toxicity Data

Proprietary Process Oils
Long-term repeated (lifetime) skin exposure to similar materials has been reported to result in an increase in skin tumors in laboratory rodents. The International Agency for Research on Cancer (IARC) has concluded that this category of untreated and mildly-treated oils are possibly carcinogenic to humans (Group 2B).

Asphalt, unoxidized
Acute effects:
Asphalt fumes have been associated with irritation of eyes nose and throat. Also, lower respiratory effects have been reported.

Carcinogenicity:
Animal Studies:
Certain extracts of asphalt (bitumen) have been shown to produce cancers in mouse skin painting studies. In 1985, the International Agency for Research on Cancer (IARC) concluded that there was insufficient evidence to conclude that asphalts alone are carcinogenic to humans. However, IARC did determine that there is sufficient evidence for the carcinogenicity of extracts of steam refined bitumens, air refined bitumens and pooled mixtures of steam and air refined bitumens in experimental animals.

Skin painting studies have demonstrated that certain high temperature asphalt fume condensates can produce cancers in mice. The causal agent is thought to be 4 to 6 ring polycyclic aromatic compounds. These compounds can be found in asphalt fumes generated at temperatures exceeding normal storage and application temperatures of paving asphalt. Studies on fumes similar to those found in the asphalt paving work environment indicated no mutagenic activity.

Epidemiological Studies:
Epidemiological studies have indicated a link between exposure to asphalt fumes and certain types of cancer, including cancers of the lung and G.I. tract in a cohort of Danish workers. However, these studies apparently either did not evaluate or inadequately controlled for confounders such as smoking and concomitant coal tar exposure.

In a cohort of European paving and mastic asphalt workers, an IARC sponsored study suggested a slight increase in lung cancer mortality when asphalt workers were compared to the general national population. The IARC study further suggested that there is amarginal relationship in increased lung cancers and increased average asphalt fume exposure. However, the IARC study could not exclude confounding from exposure to other agents in the workplace. Further, the study did not conclude that increased lung cancer mortality is linked to increased duration of exposure or to cumulative exposure to asphalt fumes. Consequently, the results of this IARC study are considered equivocal.

SECTION 12. ECOLOGICAL INFORMATION

Ecotoxicity Analysis for ecological effects has not been conducted on this product. Spills into water ways may be harmful to benthic organisms and bottom feeders.

Environmental Fate This product is estimated to have a slow rate of biodegradation. This product is not expected to bioaccumulate through food chains in the environment.

SECTION 13. DISPOSAL CONSIDERATIONS

Hazard characteristic and regulatory waste stream classification can change with product use. Accordingly, it is the responsibility of the user to determine the proper storage, transportation, treatment and/or disposal methodologies for spent materials and residues at the time of disposition.

Maximize material recovery for reuse or recycling. Conditions of use may cause this material to become a "hazardous waste", as defined by federal or state regulations. It is the responsibility of the user to determine if the material is a "hazardous waste" at the time of disposal. Transportation, treatment, storage, and disposal of waste material must be conducted in accordance with RCRA regulations (see 40 CFR 260 through 40 CFR 271). State and/or local regulations may be more restrictive. Contact your regional US EPA office for guidance concerning case specific disposal issues.

SECTION 14. TRANSPORT INFORMATION

This shipping description below may not represent requirements for all modes of transportation, shipping methods or locations outside of the United States.

US DOT Status This material is regulated by the US DOT only when it is offered for shipment at temperatures above 212° F (100° C). This material is deemed as non-hazardous when shipped at ambient temperatures and does not require DOT labeling.

Proper Shipping Name Elevated Temperature Liquid, n.o.s.

Hazard Class 9

Packing Group(s) III

UN/NA Number UN 3257

Reportable Quantity A Reportable Quantity (RQ) has not been established for this material.

Placard(s)

Emergency Response Guide No. 128

MARPOL III Status Not a DOT "Marine Pollutant" per 49 CFR 171.8.

SECTION 15. REGULATORY INFORMATION

TSCA Inventory This product and/or its components are listed on the Toxic Substances Control Act (TSCA) inventory.

SARA 302/304 Emergency Planning and Notification The Superfund Amendments and Reauthorization Act of 1986 (SARA) Title III requires facilities subject to Subparts 302 and 304 to submit emergency planning and notification information based on Threshold Planning Quantities (TPQs) and Reportable Quantities (RQs) for "Extremely Hazardous Substances" listed in 40 CFR 302.4 and 40 CFR 355. No components were identified.

Asphalt Cement, All Grades

SARA 311/312 Hazard Identification	The Superfund Amendments and Reauthorization Act of 1986 (SARA) Title III requires facilities subject to this subpart to submit aggregate information on chemicals by "Hazard Category" as defined in 40 CFR 370.2. This material would be classified under the following hazard categories: Acute (Immediate) Health Hazard, Chronic (Delayed) Health Hazard
SARA 313 Toxic Chemical Notification and Release Reporting	This product contains the following components in concentrations above *de minimis* levels that are listed as toxic chemicals in 40 CFR Part 372 pursuant to the requirements of Section 313 of SARA: No components were identified.
CERCLA	The Comprehensive Environmental Response, Compensation, and Liability Act of 1980 (CERCLA) requires notification of the National Response Center concerning release of quantities of "hazardous substances" equal to or greater than the reportable quantities (RQ's) listed in 40 CFR 302.4. As defined by CERCLA, the term "hazardous substance" does not include petroleum, including crude oil or any fraction thereof which is not otherwise specifically designated in 40 CFR 302.4. This product or refinery stream is not known to contain chemical substances subject to this statute. However, it is recommended that you contact state and local authorities to determine if there are any other reporting requirements in the event of a spill.
Clean Water Act (CWA)	This material is classified as an oil under Section 311 of the Clean Water Act (CWA) and the Oil Pollution Act of 1990 (OPA). Discharges or spills which produce a visible sheen on waters of the United States, their adjoining shorelines, or into conduits leading to surface waters must be reported to the EPA's National Response Center at (800) 424-8802.
California Proposition 65	This material may contain the following components which are known to the State of California to cause cancer, birth defects or other reproductive harm, and may be subject to the requirements of California Proposition 65 (CA Health & Safety Code Section 25249.5): Polynuclear Aromatic Hydrocarbons
New Jersey Right-to-Know Label	For New Jersey R-T-K labeling requirements, refer to components listed in Section 2.
Additional Remarks	No additional regulatory remarks.

SECTION 16. OTHER INFORMATION

Refer to the top of Page 1 for the HMIS and NFPA Hazard Ratings for this product.

REVISION INFORMATION

Version Number	1.00
Revision Date	3/16/2006
Print Date	Printed on 3/16/2006.

ABBREVIATIONS

AP: Approximately EQ: Equal >: Greater Than <: Less Than NA: Not Applicable ND: No Data NE: Not Establishe
ACGIH: American Conference of Governmental Industrial Hygienists
AIHA: American Industrial Hygiene Association
IARC: International Agency for Research on Cancer
NTP: National Toxicology Program
NIOSH: National Institute of Occupational Safety and Health
OSHA: Occupational Safety and Health Administration
NPCA: National Paint and Coating Manufacturers Association
HMIS: Hazardous Materials Information System
NFPA: National Fire Protection Association
EPA: US Environmental Protection Agency

DISCLAIMER OF LIABILITY

Asphalt Cement, All Grades

THE INFORMATION IN THIS MSDS WAS OBTAINED FROM SOURCES WHICH WE BELIEVE ARE RELIABLE. HOWEVER, THE INFORMATION IS PROVIDED WITHOUT ANY WARRANTY, EXPRESSED OR IMPLIED REGARDING ITS CORRECTNESS. SOME INFORMATION PRESENTED AND CONCLUSIONS DRAWN HEREIN ARE FROM SOURCES OTHER THAN DIRECT TEST DATA ON THE SUBSTANCE ITSELF. THIS MSDS WAS PREPARED AND IS TO BE USED ONLY FOR THIS PRODUCT. IF THE PRODUCT IS USED AS A COMPONENT IN ANOTHER PRODUCT, THIS MSDS INFORMATION MAY NOT BE APPLICABLE. USERS SHOULD MAKE THEIR OWN INVESTIGATIONS TO DETERMINE THE SUITABILITY OF THE INFORMATION OR PRODUCTS FOR THEIR PARTICULAR PURPOSE.

THE CONDITIONS OR METHODS OF HANDLING, STORAGE, USE, AND DISPOSAL OF THE PRODUCT ARE BEYOND OUR CONTROL AND MAY BE BEYOND OUR KNOWLEDGE. FOR THIS AND OTHER REASONS, WE DO NOT ASSUME RESPONSIBILITY AND EXPRESSLY DISCLAIM LIABILITY FOR LOSS, DAMAGE OR EXPENSE ARISING OUT OF OR IN ANY WAY CONNECTED WITH HANDLING, STORAGE, USE OR DISPOSAL OF THE PRODUCT.

***** END OF MSDS *****

Flushing Asphalt, LLC

120-01 31st Avenue, Flushing, NY 11354
Tel: (718) 961-8888 Fax: (718) 461-1611

JOB MIX FORMULA

DATE:		May 8, 2009
PROJECT NAME:		
CONTRACTOR:	**Name:**	Carullo Construction Corp.
	Location:	19-44 Steinway Street Astoria, New York 11105
BITUM. PLANT	**Name:**	Flushing Asphalt, LLC
	Location:	120-01 31st Avenue Flushing, N.Y. 11354
	Type:	Drum
	Capacity:	400TPH
PREPARED BY:	**Name:**	Ralph Hoeffner
	Location:	120-01 31st Avenue Flushing, N.Y. 11354
SPECIFICATIONS:		Port Authority I-5A (PG 64-22)

PRODUCER: FLUSHING ASPHALT LLC DATE:
PROJECT: --- SPEC: I-5 A

JMF TEST PROPERTIES AT OPTIMUM ASPHALT CONTENT

PROPERTY	VALUE	SPECIFICATION
Mixing Temperature	Temp - 320 Viscosity - 180 cst	170 +/- 20cst
Compaction Temperature	285 +/- 5 F	285-295
Compactive Effort: No. of Blows	75	75
Asphalt Content, %	5.8	5.8 - 6.5
Marshall Stability, lbs.	2843	2150 min.
Flow Value, .01 in.	10.3	8 - 16
Air Voids, %	4.2	2.5 - 5.5
Voids Filled, %	77.0	65 - 75
Unit Weight, lbs/cu. ft.	154.38	
Maximum Theoretical (ASTM D2041)	2.581	
VMA	18.1%	16.0 min.

SIGNED: Ralph Hoeffner

AFFILIATION: FLUSHING ASPHALT LLC

INITIAL MATERIAL ACCEPTANCE TESTING

PROPERTY	TEST	VALUE*	SPECIFICATION
COARSE AGGREGATE			
WEAR-ABRASION	ASTM C131		<=40% SURFACE WEAR
SOUNDNESS:			<=50% BASE
SODIUM SULFATE	ASTM C88		LOSS <= 10%
MAGNESIUM SULFATE	ASTM C88		LOSS <= 13%
FLAT ELONGATED PIECES	APPENDIX E		<= 8%
CRUSHED PIECES			
AIRCRAFT WEIGHT (LBS.)			
SLAG-DENSITY	ASTM C29		>= 70 LB/CU FT
FINE AGGREGATE			
PLASTICITY INDEX	ASTM D424		<= 6
LIQUID LIMIT	ASTM D423		<=25
SAND EQUIVALENT	ASTM D2419		>=35%
PLASTICITY INDEX (FILLER)	ASTM D242		<=4%

NOTES: *NYSDOT Approved Sources

SIGNED: Ralph Hoeffner

AFFILIATION: _____

AGGREGATE PROPERTIES

* MATERIAL	SOURCE	PERCENT ABSORPTION	PERCENT USED IN FINAL AGGL BLEND	** SPECIFIC GRAVITY (APPARENT) WHEN WATER ABSORPTION LESS THAN 2.5%
3/8	Mt. Hope Rock/Tilcon	0.7	26.3	2.748
1/4	Mt. Hope Rock/Tilcon	0.7	30.1	2.728
Screenings	Mt. Hope Rock/Tilcon	0.7	16.9	2.724
Stone Sand	Mt. Hope Rock/Tilcon	0.7	16.9	2.720
Mineral Filler	-		-	

ASPHALT PROPERTIES

MATERIAL	SOURCE	SPEC. GRAVITY
PG 64-22 (AC-20)	CITGO, BAYONNE, NJ	1.03

ASTM D 2041: (OR SOLVENT IMMERSION): MAX. SPEC. GRAVITY OF MIX: @5.8 = 2.581

NOTE: * WHEN BLEND OF NATURAL SAND AND STONE SCREENINGS USED INDICATE PERCENTAGE OF EACH AND SPECIFIC GRAVITY OF BLEND.

** AVERAGE OF THREE DETERMINATIONS ON EACH MATERIAL

SIGNED: Ralph Hoeffner

AFFILIATION: FLUSHING ASPHALT LLC

Gradation Analysis

Producer: FLUSHING ASPHALT LLC
Project/AIP No.

Spec: 15A
Date:

Sieve Size	Bin No. 5 0%		Bin No. 4 27.9%		Bin No. 3 31.8%		Bin No. 2 20.1%		Bin No. 1 20.1%		%		Comb. Grad.	Prod. Spec.		Gen'l Spec.	
	% Pass	% Batch	% Pass	% Batch	% Pass	% Batch	% Pass	% Batch	% Pass	% Batch	% Pass	% Batch		Min.	Max.	Min.	Max.
1 1/4"		0	100	0		0		0		0			0				
1		0	100	27.9	100	31.9	100	20.1	100	20.1			100	100	100	100	100
3/4"		0	100	27.9	100	31.9	100	20.1	100	20.1			100	100	100	100	100
1/2"		0	98.6	27.5	100	31.9	100	20.1	100	20.1			99.6	100	100	100	100
3/8"		0	70.1	19.6	100.0	31.9	100.0	20.1	100.0	20.1			91.7	86	96	80	100
#4		0	7	2.0	55.3	17.6	99.7	20.0	99.8	20.1			59.7	56	64	55	85
#8		0	2.7	0.8	8.0	2.6	83.9	16.9	85.4	17.2			37.3	33	41	32	42
#16		0		0	2.3	0.7	66.3	13.3	65.7	13.2			27.3	23	31	20	30
#30		0		0		0.0	51.3	10.3	49.2	9.9			20.2	16	24	12	22
#50		0		0		0.0	35.2	7.1	35.3	7.1			14.2	11	17	7	16
#100		0		0		0	17.0	3.4	22.9	4.6			8.0	6	10	3	12
#200		0		0		0	5.7	1.1	14.6	2.9			4.1	2	6	2	6

Blended Sand Used:
JMF Spec. Gravity:
Measured Spec. Gravity:

Test performed by: RALPH HOEFFNER
Affiliation: FLUSHING ASPHALT LLC

MAY.09.2009 19:27
05/09/2009 SAT 06:21 [TX/RX NO 5420] 015
#1445 P.015 /018

FLUSHING ASPHALT LLC

YHE PORT AUTHORITY OF NY &NJ
MATERIALS ENGINEERING SECTION/CONSTRUCTION DIVISION
COMPUTATION OF PROPERTIES OF ASPHALT MIXTURES

PRODUCER COLLEGE POINT					PROJECT				CONTRACT #			TYPE MIX: I-5 A				DATE:		
Specimen numbers			AC %	Thickness (in.)	WEIGHT-GRAMS				Specific gravity		AC by Volume	Voids%		VMA %	Unit Wt totalmix	Stability-Lbs.		Flow
test #	Imp F	plug nos			IN AIR	S.S.D	IN H20	VOLUME cc	Bulk	Max	%	Total Mix	Filled		lbs/cu.ft.	Measured	Convertit	.01 inc.
					A	B	C	D	E	F	G	H	I	J	L	M	N	O
	285	a	5.0		1240	1242	734.7	507.2	2.445							3500	3840	9.5
1	285	b	5.0		1234	1235	729.6	505.7	2.440							3600	3744	10.5
	285	c	5.0		1238	1240	732.7	507.1	2.442							3450	3588	9.5
								Averages	2.442	2.623	11.84	6.9	63.2	18.7	152.4		3657	9.8
	285	a	5.5		1243	1244	742.3	501.2	2.479							2850	2964	10.0
2	285	b	5.5		1250	1251	747.0	503.8	2.481							2800	2912	10.5
	285	c	5.5		1248	1249	745.3	504.0	2.477							2900	3016	10.0
								Averages	2.479	2.620	13.2	5.4	71.1	18.6	154.7		2964	10.2
	285	a	5.8		1240	1241	738.5	502	2.469							2750	2860	10.5
3	285	b	5.8		1226	1227	731.2	495.5	2.474							2850	2756	10.0
	285	c	5.8		1240	1241	740.6	500.2	2.478							2900	2912	10.5
								Averages	2.474	2.581	13.9	4.2	77.0	18.1	154.4		2843	10.3
	285	a	6.0		1247	1248	746.5	501.2	2.489							3000	3120	10.5
4	285	b	6.0		1246	1247	747.0	500.2	2.491							2800	2912	12.0
	285	c	6.0		1237	1238	741.8	496.1	2.494							2900	3016	11.0
								Averages	2.491	2.588	14.5	3.7	79.5	18.2	155.5		3016	11.2
	285	a	6.5		1243	1244	738.3	505.7	2.457							2950	3068	13.0
5	285	b	6.5		1239	1239	736.3	502.5	2.465							3000	3120	14.0
	285	c	6.5		1242	1242	738.1	504.3	2.462							2850	2964	13.5
								Averages	2.461	2.530	15.5	2.7	85.1	18.2	153.6		3051	13.5
Computed by:							Daily Averages											
Checked by:																		
Lot No.:							Specifications					2.5	65	Min			Min	8
												5.5	75	16			2150	16

Remarks

QUALITY CONTROL DEPARTMENT

MAY.09.2009 19:27
05/09/2009 SAT 06:21 [TX/RX NO 5420] 016
#1445 P.016 /018

PRODUCER: FLUSHING ASPHALT LLC **MIX TYPE:** I-5 A

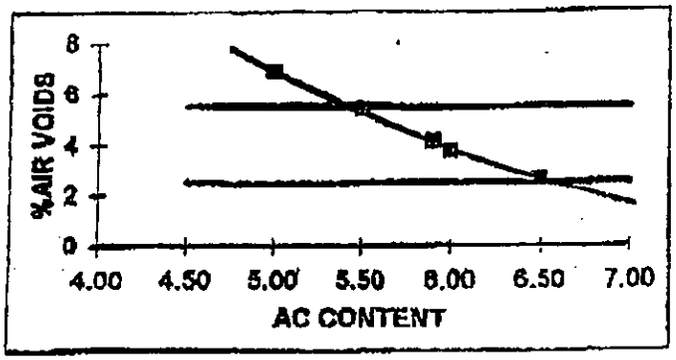

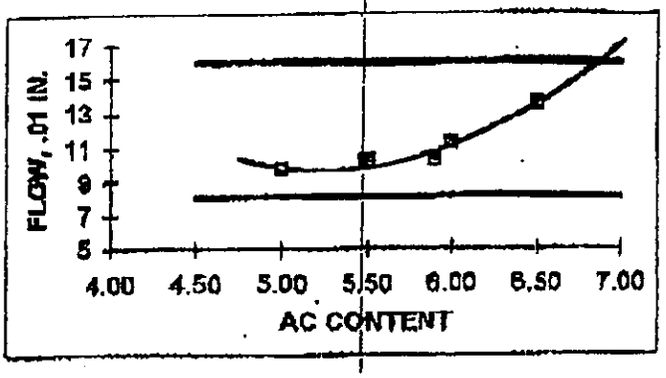

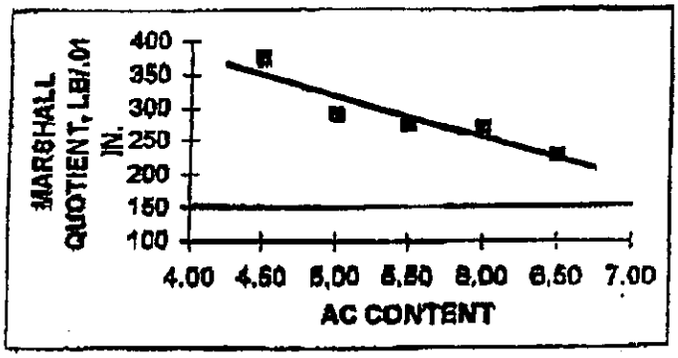

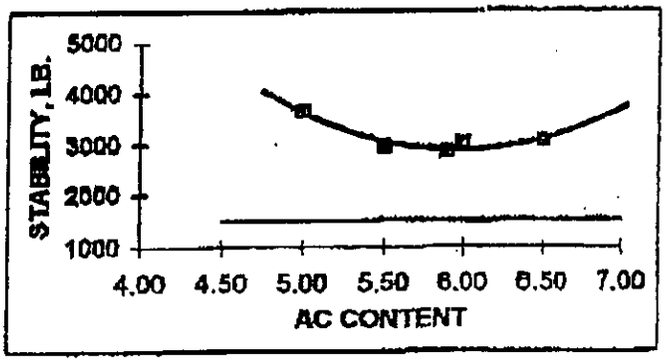

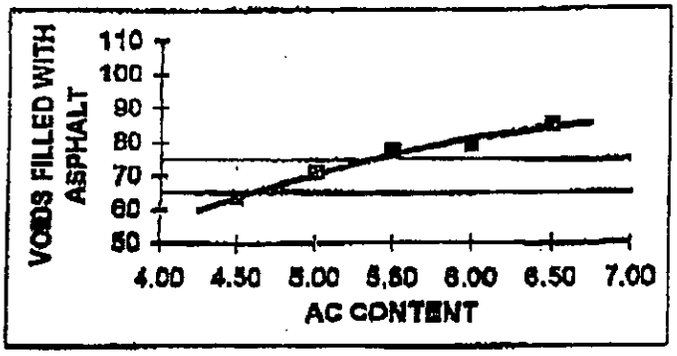

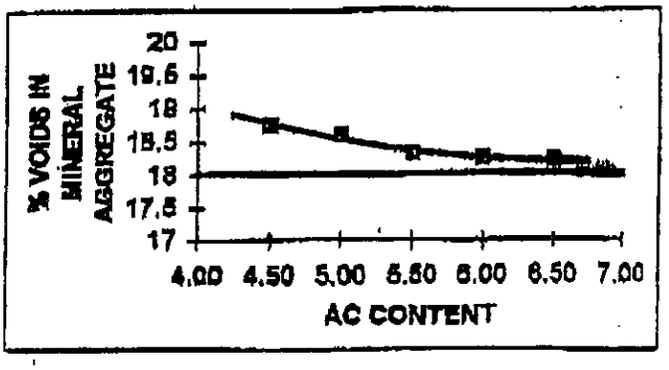

UNITED STATES BUREAU OF PUBLIC ROADS 0.45 POWER GRADATION CHART

SIEVE SIZES RAISED TO 0.45 POWER

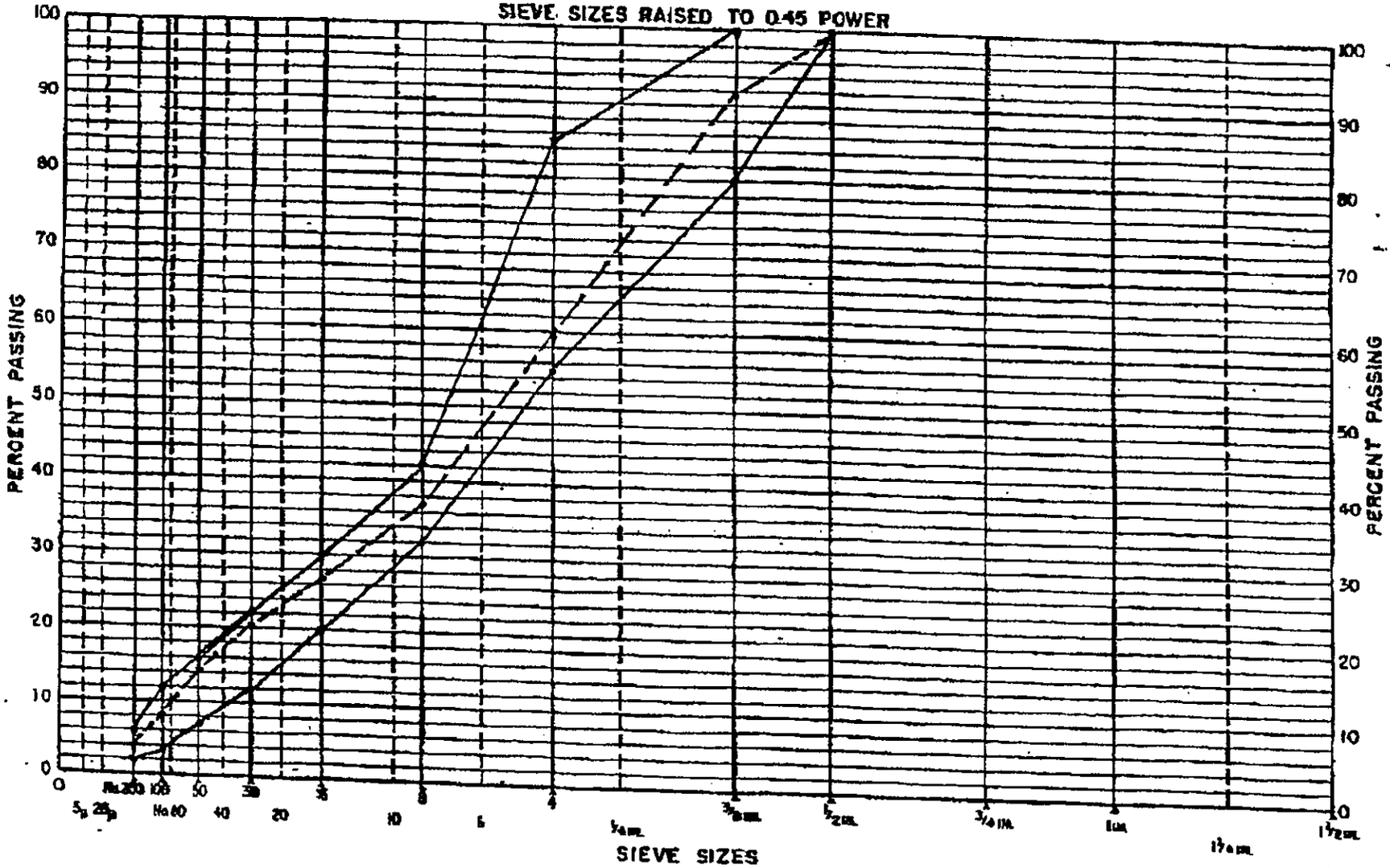

A THIS SYMBOL IDENTIFIES SIMPLIFIED PRACTICE AND COMPATIBLE SIEVE SIZES

Identification of gradations:

I-6A

Sheet No.

Date

Form No. DC-3
THE ASPHALT INSTITUTE

PANYNJ - Materials Engineering Unit

241 Erie Street, Room 234
Jersey City, NJ 07310
Tel: 201-216-2952
Fax: 201-216-2949

THE PORT AUTHORITY OF NY & NJ

Transmittal No. 00022

PROJECT: WO12 South Wing Emerg. Stair Repairs

DATE: 7/13/2009

TO: VRH Construction Corp.
c/o Port Authority of NY & NJ
625 Eight Ave. 2nd Flr. North Bldg
New York, NY 10018

CONTRACT: PABT-200.200 WO12

ATTN: **Anthony Carnabuci**

WE ARE SENDING:	SUBMITTED FOR:	ACTION TAKEN:
☑ Shop Drawings	☐ Approval	☐ Approved as Submitted
☐ Letter	☐ Your Use	☐ Approved as Corrected
☐ Prints	☑ As Requested	☐ Not Approved
☐ Change Order	☐ Review and Comment	☐ For Record Only
☐ Plans		☐ Unsuubmitted
☐ Samples	**SENT VIA:**	☐ Due Date:
☐ Specifications	☑ Attached	
☑ Other: Made from Submittal	☐ Separate Cover Via: Mail	

SUBMITTAL	REV.	DATE	DESCRIPTION	Remark	STATUS
15890-0003A	R000	7/13/2009	Desc: Ductmate Industries, Inc.; Catalog Cut Sheet for "ProSeal & FiberSeal" a premium water based high-velocity duct sealants; to seal joints on the metal duct prior to perform leakage test in accordance with SMACNA Standards; Contract Dwg. No. M001, Note 6.		APP
15890-0003B	R000	7/13/2009	Desc: Ductmate Industries, Inc.; Material Safety Data Sheet for "ProSeal & FiberSeal"		FRO

Remarks: 1. Follow manufacturer's "Directions for Use" recommendations.

Approvals shall not relieve the Contractor of any responsibility as required by the Contract or waive any further authority of the Engineer or modify or waive any provision of the subject Contract with regard to this material(s) or its approval.

Material(s), which do not conform to the contract documents, will be subject to rejection at the job site by the Resident Engineer.

If you have any questions, please call Carlos Perez of my staff at (201) 216-2589. Our fax number is (201) 216-2949.

CC: P. Salvatore w/att., K-K. Chan w/att., C. Perez, MEU file

Signed:
Casimir Bognacki, P.E.
Chief of Materials Engineering

THE PORT AUTHORITY OF NY & NJ
PABT ENGINEERING FIELD OFFICE
JUL 21 2009
FILE

Expedition ®

LETTER OF TRANSMITTAL

Action Key
1 For your records and/or use
2 For price quotation
3 For approval
4 Approved/Reviewed
5 Approved as noted: Re-submission not required
6 Approved as noted: Revise and re-submit
7 Rejected: Re-submit per contract documents

RECEIVED JUN 29 2009

VRH
CONSTRUCTION CORP.
General Contractors & Construction Managers

To	The Port Authority of NY & NJ	Transmittal No.	00012
	Two Gateway Center	Job No.	2030WO12
	15th Floor	Project	PANY/NJ-bt-200.200 WO 12
	Newark, NJ 07102		South Wing Emergency Stair Repairs
Attention	Ka Kei Chan		
Phone No.	973-792-4629 Fax 973-792-4602		

We are sending you herewith the followir ☒ Drawings ☒ Shop Drawings ☐ Samples ☐ Specifications ☒ Other:

Via: ☒ Attached ☐ Separate Cover Via Mail

Quantity	Drawing/Submittal No.	Description	Action
9	15890-002 Mech	Dwg: Title: Fire Limit Access Doors Desc: Fire Limit Access Doors	3
9	15890-003	Dwg: Title: Duct Sealant Desc: Duct Sealant	3
9	15890-004 Elec. Mech	Dwg: Title: Adjustable Current Switch Desc: Adjustable Current Switch	3
9	15890-005 Elec / Mech	Dwg: Title: Line Voltage Wall Thermostat Desc: Line Voltage Wall Thermostat	3
9	15890-006 Elec / Mech	Dwg: Title: Universal Thermostat Guards Desc: Universal Thermostat Guards	3
9	15890-007	Dwg: Title: Prime Galvanized G90 Test Cert. Desc: Prime Galvanized G90 Test Cert.	3
9	15890-001 Mech	Dwg: Title: Fire/Smoke Damper Desc: Fire/Smoke Damper	3

Missing

Remarks:

cc: P. Salvatore; A. Kaprielian/PANYNJ

Signed Anthony Carnabucci

By Anthony J. Carnabuci

Date 6/22/2009

625 Eighth Avenue
2nd Flr, North Building
New York, NY 10018

Phone
212-629-6187
Fax
212-629-9243

VRH Construction Corp.

625 Eighth Avenue
2nd Flr, North Building
New York, NY 10018

Phone: 212-629-6187
Fax: 212-629-9243

SUBMITTAL NO. 15890-003
PACKAGE NO: 15890

TITLE: Duct Sealant
PROJECT: PANY/NJ-bt-200.200 WO 12
DRAWING:
STATUS: 3
BIC: PANYNJ

REQUIRED START: 6/22/2009
REQUIRED FINISH: 7/6/2009
DAYS HELD: 0
DAYS ELAPSED: 0
DAYS OVERDUE: -14

RECEIVED FROM		SENT TO		RETURNED BY		FORWARDED TO	
WI	TWV	PANYNJ	KC	PANYNJ	KC	WI	TWV

Revision No.	Description/Remarks	Received	Sent	Returned	Forwarded	Status	Sepias	Prints	Drawing Date	Held	Elapsed
000	Duct Sealant	6/22/2009	6/22/2009			3	0	9		0	0

DUCTMATE

PROseal® & FIBERseal®

SPEC DUCTMATE

15890-003
200.200 W.O. 12

Water Based High Velocity Duct Sealant

Low Brush Drag and Spreadability Reduces Labor Cost

- Permanently seals metal duct joints
- Effective in low, medium, and high pressure systems
- Superior adhesion to metal
- May be used for indoor or outdoor applications
- Remains flexible
- Manufactured by S.M.W.I.A. Local 12
- Will not drip or sag
- Mildew resistant
- UL 181B-M Listed
- UL 723 classified
- Water Resistant
- UV Resistant
- No VOC's
- Contributes to satisfying LEED EQ Credit 4.1
- For Applications up to 15" w.g.
- Paintable with Latex or Epoxy based paint

GASKETS, SEALANTS, ADHESIVES

DUCTMATE® Industries, Inc.

PROseal® & FIBERseal®

Premium Water Based High-Velocity Duct Sealant

DESCRIPTION

PROseal and FIBERseal are premium water based high-velocity duct sealants.

BASIC USE

To seal metal joints against air leaks in low, medium, and high pressure duct systems.

SPECIAL CHARACTERISTICS

- UL 181B-M Listed
- UL 723 Classified
- Permanently Flexible
- Non-Flammable
- Exceptional Workability
- Will Not Drip or Sag
- Non-Cracking Formula
- Low Brush Drag and Spreadability
- Reduces Labor Cost
- Low Shrinkage
- Excellent Adhesion To Metal
- Mild Odor
- Indoor or Outdoor Use
- Conforms to Requirements of NFPA 90A and 90B
- Water Resistant
- No VOC's
- For Applications Up To 15" W.G.
- Paintable - Latex or Epoxy
- Qualifies for LEED™ Credit EQ 4.1

DIRECTIONS FOR USE

Surface Preparation: For good brushability, store at room temperature at least 24 hours before applying. Surfaces should be clean, dry and free of any dirt, oil, grease, water or foreign matter.

Application: (DO NOT THIN) Do not apply when rain or freezing temperatures will occur within 36 hours.

When Used In Conjunction With Sheet Metal: Apply by brush, hand, trowel or spray. PROseal and FIBERseal should be applied to duct connections according to all applicable SMACNA standards. Apply to the inside of female fittings and outside of male fittings. Assemble the joint.

Brush sealant over the assembled joint. Thoroughly cover joint and screws with a 2" to 3" wide band. Assembly should cure for 24-72 hours before pressure testing the system. Since field temperature/ humidity conditions may vary, longer set times may be required for specific installations. Apply at a rate of 50 sq. ft. per gallon (1/32" thick).

When Used in Conjunction With UL 181 Listed Flexible Air Ducts: Apply by brush a 1/16" (25 sq.ft. per gallon) coating and allow to dry a minimum of 24-72 hours. Since field temperature/humidity conditions may vary, longer set times may be required for specific installations. Use with mechanical fasteners per Air Duct installation instructions.

Clean Up: Use warm, soapy water to clean up sealant while it is still wet.

KEEP OUT OF REACH OF CHILDREN
Consult The MSDS Sheet Before Using Product

TECHNICAL INFORMATION

BASE:	Synthetic latex emulsion (PROseal & FIBERseal) with fiber reinforcement (FIBERseal)
COLOR:	Gray
TYPE:	Water Base
WEIGHT:	11 ± .2 lbs per gallon
SOLID CONTENTS:	66% ± 2%
VISCOSITY:	350,000 c.p.s.
APPLICATION TEMPERATURE:	35°F to 110°F
SERVICE TEMPERATURE:	- 25°F to 200°F
STORAGE TEMPERATURE:	40°F to 85°F
DRY TO TOUCH:	1 hour (approximate)
CURE TIME:	24 to 72 hours + (depending on humidity, application, and temperature)
FLAMMABILITY:	Non-flammable in both wet and dry state
FLASH POINT:	No flash to boiling
WATER RESISTANCE:	Excellent
MILDEW RESISTANCE:	Excellent
FREEZE THAW STABILITY:	5 cycles
COVERAGE:	25 sq. ft./gal. at 1/16" 50 sq. ft./gal. at 1/32"
ODOR:	Mild (wet) None (dry)
SHELF LIFE:	1 year(unopened container)
CURED SEALANT:	Tough and permanently flexible
PACKAGING:	1/12 gallon tubes(25 tubes/case) 1 gallon pail (4 gal./case) 5 gallon pail 55 gallon drum

CAULKINGS AND SEALANTS
SURFACE BURNING CHARACTERISTICS
AS APPLIED TO INORGANIC REINFORCED
CEMENT BOARD
51RF

	PROseal	FIBERseal
FLAME SPREAD:	0	5
SMOKE DEVELOPED:	0	5

Applied to Inorganic Reinforced Cement Board+
Tested as applied in two 2 in. wide strips 8 in. on center covering 16 percent of the test sample area at a coverage rate of 25 sq. ft. per gal.

LIMITED PRODUCT WARRANTY

Ductmate Industries, Inc. is not liable for consequential, incidental or special damages. There are no statutory or implied warranties including the warranties for fitness for a particular purpose and merchantability. There are no warranties other than as set forth below and Ductmate Industries, Inc. neither assumes nor authorizes any person to assume any liability or other obligation in connection with PROseal and FIBERseal.

PROseal and FIBERseal are warranted to be free from any and all defects in material and workmanship only at the time of shipment from our plant. If material is shown to be defective at the time of shipment from our plant, Ductmate Industries, Inc. will replace or issue credit for the original purchase price.

PROseal and FIBERseal will provide an airtight seal between most surfaces normally used in duct construction when installed according to the printed application directions. To determine the suitability of PROseal and FIBERseal for each specific purpose, the user must make his own test and determination. Ductmate Industries, Inc. does not guarantee the results from the use of PROseal and FIBERseal because of the extreme differences in surface texture and porosity of available materials and the possibility of structural movement or externally caused damages.

DUCTMATE® Industries, Inc.

Charleroi, PA
210 Fifth Street
Charleroi, PA 15022
800-245-3188
724-258-0500
FAX: 724-258-5494

Lodi, CA
810 S. Cluff Avenue
Lodi, CA 95240-9141
800-344-3270
209-333-4680
FAX: 209-333-4678

www.ductmate.com

Distributed By:

Ductmate is a proud member of the following organizations:

169/7-08

MATERIAL SAFETY DATA SHEET

ISSUE DATE: 1/7/98
REVISED DATE: 5/02/09
Supercedes: Any previous M.S.D.S. on this product
EMERGENCY TELEPHONE NUMBER: CHEM-TEL, INC 1-800-255-3924

I. IDENTIFICATION

PRODUCT NAME: **Proseal/Fiberseal**
PRODUCT CLASS: Water Based Duct Sealant (Caulking)

DUCTMATE INDUSTRIES, INC.
1502 Industrial Drive
Monongahela, PA 15063

II. HAZARDOUS INGREDIENTS

REPORTING REQUIREMENTS:
OSHA Hazard Communication Standard (29CFR1910.1200) hazard class.....None
EPA SARA Title III Section 312 (40CFR370) hazard class.....None
EPA SARA Title III Section 313 (40CFR372) toxic chemicals above "de minimis" level are....None
CALIFORNIA PROP 65 substances listed by the State of California under the "Safe Drinking Water and Toxic Enforcement Act of 1986". No such substances are present in reportable amounts for occupational exposure as per OSHA's approval of the California Hazard Communication Standard, Federal Register, page 31159 ff, 6 June 1997.

III. PHYSICAL DATA

APPEARANCE: Gray caulking
SOLUBILITY IN WATER: Dilutable
BOILING POINT: 100°C / 212°F
WEIGHT PER GALLON: 11 ± .2 lbs/gallon
VOLATILE BY WEIGHT: 34% ± 2% (Water)
VAPOR DENSITY: Heavier than Air.
EVAPORATION RATE: (BAC = 1) Less than 1
ODOR: Mild
PHYSICAL STATE: Paste
Ph: 8 to 9.5

IV. HEALTH HAZARD DATA

CAUTION: May cause discomfort in eyes. Prolonged or repeated contact with skin may cause dryness.
IN EYES: Flush with water for 15 minutes.
ON SKIN: Wash with soap and water.
INGESTED: Seek medical attention.
INHALATION: No effects expected. If difficulty breathing occurs remove to fresh air and consult physician.

V. EMERGENCY AND FIRST AID

FLAMMABILITY CLASS (OSHA/NFPA): None.
FLASHPOINT: >212°F PM Closed cup
EXTINGUISHING MEDIA: Water or dry type extinguisher.
UNUSUAL FIRE HAZARD: Containers may burst when exposed to extreme heat.
FIRE FIGHTING PROCEDURES: Firemen should wear equipment to protect against noxious fumes. Self contained breathing apparatus my be needed
PRODUCT OF COMBUSTION: May yield Carbon Monoxide and/or Carbon Dioxide.

VI. SPILL OR LEAK PROCEDURES

Collect spilled material in salvage container. Small amounts may be absorbed into appropriate absorbents. Prevent spill from entering sewers, drains, and waterways.
Dispose of product in accordance with applicable local, state, and federal regulations.

VII. SPECIAL PROTECTION

VENTILATION: Provide sufficient ventilation to maintain constant fresh air in workplace.
EYE PROTECTION: Use safety goggles when splash potential exists.
HAND PROTECTION: Protective impervious gloves are recommended.
OTHER: A clean source of water should be available for washing eyes and skin.

VIII. REGULATORY INFORMATION

Non-flammable, as a Latex compound
U.S.A.: Regulation by the following: DOT, IMO, ICAD/IATA: None
Canada: Regulation by the following: DSL, WHMIS: None
European: EEC SYMBOL: None
EEC Classification, Packaging and Labeling of Dangerous Substances: None
TSCA 12(b) Export Notification Requirement: All components of this product are either listed on the U.S. Toxic Substances Control Act (TSCA) inventory of chemicals or are otherwise compliant with TSCA regulations.

IX. REACTIVITY DATA

STABILITY: Stable under normal conditions of handling and use.
INCOMPATIBILITY: Products may react violently with products that react with water.
HAZARDOUS DECOMPOSITION: Fumes produced when heated to decomposition may include: oxides of carbon, nitrogen, and sulfur along with hydrocarbon residues.
HAZARDOUS POLYMERIZATION: Will not occur.

X. SPECIAL PRECAUTIONS

HANDLING AND STORAGE: Store in tightly closed containers at temperatures 45°F to 90°F. . Guard against inhalation of excess vapors, ingestion, and contact with skin and eyes. Change soiled workclothes frequently. Clean hands after handling. Precautions also apply to emptied containers. Keep containers away from extreme heat and cold. Prevent from freezing, but if product is allowed to freeze, thaw completely before use.

This information is taken from sources or based upon data believed to be reliable; however, DUCTMATE INDUSTRIES, INC. makes no warranty as to the absolute correctness or sufficiency of any of the foregoing or that additional or other measures may not be required under particular conditions. Although certain hazards are described herein, we cannot guarantee that these are the only hazards that exist, as all materials may present unknown health hazards.

Materials Engineering Unit

241 Erie Street, Room 234
Jersey City, NJ 07310
Tel: 201-216-2952 **Fax:** 201-216-2949

THE PORT AUTHORITY OF NY & NJ

TRANSMITTAL
No. 00025

PROJECT: WO12 South Wing Emerg. Stair Repairs

DATE: 7/22/2009

TO: VRH Construction Corp.
c/o Port Authority of NY & NJ
625 Eight Ave. 2nd Flr. North Bldg
New York, NY 10018

CONTRACT: PABT-200.200 WO12

ATTN: **Anthony Carnabuci**

		STATUS LEGEND:
☐ Shop Drawings	Approved (APP)	New Item (NEW)
☑ Letter	Approved as Corrected (AAC)	Not Approved (NA)
☐ Prints	Approved as Noted (AAN)	Not Reviewed (NR)
☐ Change Order	For Record Only (FRO)	Review With Comments (RWC)
☐ Plans	For Your Information (FYI)	Review With No Comments (RWNC)
☐ Samples	Incomplete (INC)	Superseded (SUPS)
☐ Specifications		
☑ Other: Made from Submittal Set	☐ Attached ☐ Separate Cover Via: Mail	
	Review and Comment	

SUBMITTAL	REV.	DATE	DESCRIPTION	Remark	STATUS
16110-0001	R000	7/22/2009	Desc: Galvanized Rigid Conduit		APP
16190-0011	R000	7/22/2009	Desc: Hex Head Nuts		APP
16190-0012	R000	7/22/2009	Desc: Hex Head Bolts		APP
16190-0013	R000	7/22/2009	Desc: Washers		APP
16190-0014	R000	7/22/2009	Desc: Rod Coupling Nuts		APP

Remarks: Approvals shall not relieve the Contractor of any responsibility as required by the Contract or waive any further authority of the Engineer or modify or waive any provision of the subject Contract with regard to this material(s) or its approval.

Material(s), which do not conform to the contract documents, will be subject to rejection at the job site by the Resident Engineer.

If you have any questions, please call Lance Krakowitch of my staff at (201) 595-4668. Our fax number is (201) 216-2949.

Signed: _____
for Casimir Bognacki, P.E.
Chief of Materials Engineering

CC: P. Salvatore w/att., A. Kaprielian w/att.,
L. Krakowitch, MF

Expedition

ARE	SEC	RE	ARE	OE	OE
	THE PORT AUTHORITY OF NY & NJ PABT ENGINEERING FIELD OFFICE JUL 23 2009				
FILE					

LETTER OF TRANSMITTAL

Action Key
1 For your records and/or use
2 For price quotation
3 For approval
4 Approved/Reviewed
5 Approved as noted: Re-submission not required
6 Approved as noted: Revise and re-submit
7 Rejected: Re-submit per contract documents

VRH CONSTRUCTION CORP.
General Contractors & Construction Managers

To	The Port Authority of NY & NJ	Transmittal No.	00018
	Two Gateway Center	Job No.	2030WO12
	15th Floor	Project	PANY/NJ-bt-200.200 WO 12
	Newark, NJ 07102		South Wing Emergency Stair Repairs
Attention	Ka Kei Chan		
Phone No.	973-792-4629 Fax 973-792-4602		

We are sending you herewith the following: ☐ Drawings ☒ Shop Drawings ☐ Samples ☐ Specifications ☒ Other:

Via: ☒ Attached ☐ Separate Cover Via Mail

Quantity	Drawing/Submittal No.	Description	Action
9	16190-011	Dwg: Title: Hex Head Nuts Desc: Hex Head Nuts	3
9	16190-012	Dwg: Title: Hex Head Bolts Desc: Hex Head Bolts	3
9	16190-013	Dwg: Title: Washers Desc: Threaded Rod	3
9	16190-014	Dwg: Title: Rod Coupling Nuts Desc: Rod Coupling Nuts	3
9	16110-001	Dwg: Title: Galvanized Rigid Conduit Desc: Galvanized Rigid Conduit	3

Remarks:

cc: P. Salvatore; A. Kaprielian/PANYNJ

Signed Anthony Carnabuci

By Anthony J. Carnabuci

Date 6/30/2009

625 Eighth Avenue
2nd Flr, North Building
New York, NY 10018

Phone
212-629-6187
Fax
212-629-9243

Contractor:	Total Electrical Construction Co., Inc.		
Date:	06/19/09		
Project:	WO#12 – South Wing Emergency Stair Repair		
Contract:	BT-200.200		
Item:	Galvanized Rigid Conduit		
Spec Section:	16110 – Raceways		
Page:	N/A		
Paragraph:	N/A		
Reference Dwg:	E001		
Submittal No.:	16110-01	**Rev:**	0
Approved By:	Michael Lipari		

16110-001
200.200 W.O.12

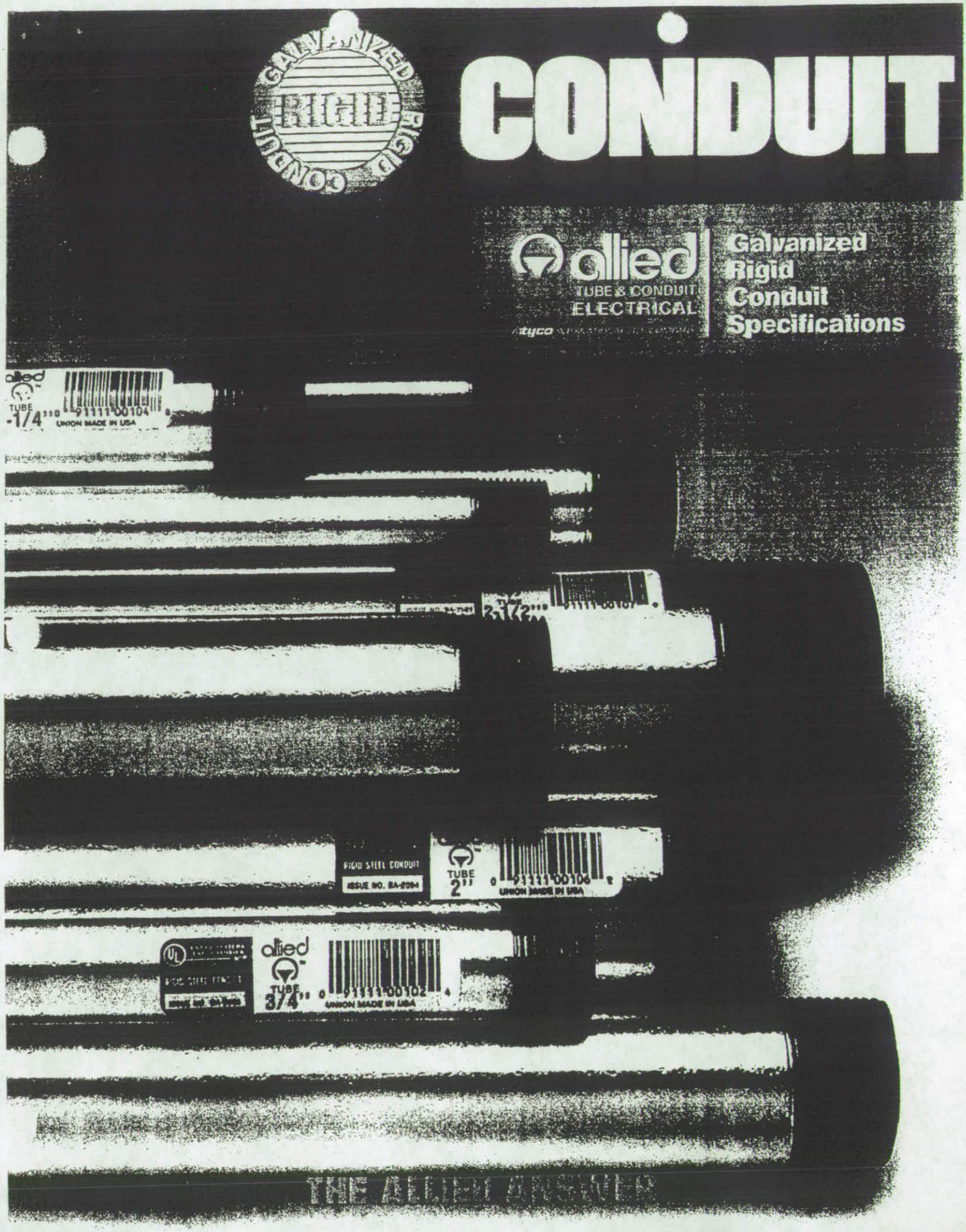
GALVANIZED RIGID CONDUIT
RIGID
CONDUIT
allied
TUBE & CONDUIT
ELECTRICAL
tyco
Galvanized
Rigid
Conduit
Specifications
TUBE 1/4"
UNION MADE IN USA
RIGID STEEL CONDUIT
ISSUE NO. RA-2094
TUBE 2"
TUBE 3/4"
THE ALLIED ANSWER

ALLIED'S RIGID

QUALITY, LONG-LASTING RIGID STEEL CONDUIT

PROVIDES FULL ELECTRICAL SYSTEM PROTECTION

Allied RIGID is precision manufactured for dependable, long-lasting value and protection for the electrical raceway system.

Manufactured from high-strength steel, Allied RIGID combines damage-resistant strength with ductility to assure easy bending, cutting and joining. It also provides smooth, continuous raceways for fast wire-pulling. No need to worry about damage to the conduit system even when pulling through multiple 90° bends.

Allied RIGID is hot-dipped galvanized inside and out. It is top-coated with a compatible organic layer to inhibit white rust and increase corrosion resistance.

Allied RIGID is impact and crush resistant for maximum conductor protection.

The 3/4" taper NPT threads (ANSI B1.20.1) are full cut and hot galvanized after cutting. Color-coded end-cap thread protectors keep the threads clean and sharp and also provide instant trade size recognition. Even-inch sizes are color-coded blue, 1/2-inch sizes are black, and 1/4-inch sizes are red.

Allied RIGID is proven to reduce electromagnetic fields emanating from within the conduit and to shield signals from electromagnetic interference. For further information, ask for "Modeling and Evaluation of Conduit Systems for Harmonics and Electromagnetic Fields." A free software program called GEMI (Ground and EMI Analysis) is also available.

FULL CODES AND STANDARDS COMPLIANCE

Allied RIGID is U.L. listed and is recognized by the National Electrical Code. It meets Underwriters Laboratories Safety Standard U.L. 6. and is manufactured to ANSI C80.1, both of which have been adopted as Federal Specifications in lieu of WWC 581. Allied RIGID is recognized as an equipment grounding conductor by NEC Article 250. Documentation for compliance with Article 250-2 of the 1999 NEC (previously 250-51) is available from Allied.

Installation of Rigid Metal Conduit shall be in accordance with the National Electrical Code and U.L. General Information card #DYIX.

Master bundles conform to NEMA standard RN2.

SPECIFICATION DATA

RIGID Metal Conduit shall be hot-dip galvanized steel equal to that manufactured by Allied Tube & Conduit Corporation. Threads shall be hot galvanized after cutting. RIGID shall be produced in accordance with U.L. Safety Standard #6 and ANSI C80.1 and shall be listed by a nationally recognized testing laboratory with follow-up service. Where **Kwik-Couple** RIGID is used it shall also meet U.L. Safety Standard #514-B. It is noted that these U.L. standards have been adopted by the federal government and separate military specifications no longer exist.

KWIK-COUPLE RIGID-A NEW INNOVATION FROM THE CONDUIT LEADER

Allied's patented* Kwik-Couple RIGID has a factory-installed Kwik-Couple coupling threaded onto one end of each conduit length or elbow. The Kwik-Couple performs like a 3-piece coupling, threading securely onto both lengths of conduit at each connection by wrench-tightening the coupling instead of turning the conduit.

Specifying U.L. listed Kwik-Couple RIGID ensures RIGID conduit reliability and performance, as well as economy. Contact Allied for detailed specifications on Kwik-Couple RIGID. Available in 2-1/2"-4" sizes.

*U.S. Patent Numbers 4258936,4547004.

* sizes as required

Weights and Dimensions for Galvanized Rigid Conduit

Trade Size Designator		Approx. Wt.* Per 100 Ft. (30.5M)		Nominal Outside Diameter[1]		Nominal Wall Thickness[1]		Quantity In Primary Bundle		Master Bundles					
										Quantity		Approx. Wt.		Volume	
U.S.	Metric	lb.	kg	in.	mm	in.	mm	ft.	m	ft.	m	lb.	kg	cu ft.	cu m
1/2	16	82	37.2	0.840	21.3	0.104	2.60	100	30.5	2500	762.5	2050	929.7	20.8	0.59
3/4	21	109	49.4	1.050	26.7	0.107	2.70	50	15.2	2000	610.0	2180	988.7	24.3	0.69
1	27	161	73.0	1.315	33.4	0.126	3.20	50	15.2	1250	381.3	2013	912.9	21.7	0.61
1-1/4	35	218	98.9	1.660	42.2	0.133	3.40	–	–	900	274.5	1962	889.8	23.3	0.66
1-1/2	41	263	119.3	1.900	48.3	0.138	3.50	–	–	800	244.0	2104	954.2	27.8	0.79
2	53	350	158.7	2.375	60.3	0.146	3.70	–	–	600	183.0	2100	952.4	33.8	0.96
2-1/2	63	559	253.5	2.875	73.0	0.193	4.90	–	–	370	112.9	2068	937.9	29.2	0.83
3	78	727	329.7	3.500	88.9	0.205	5.20	–	–	300	91.5	2181	989.1	31.3	0.89
3-1/2	91	880	399.1	4.000	101.6	0.215	5.50	–	–	250	76.3	2200	997.7	34.7	0.98
4	103	1030	467.1	4.500	114.3	0.225	5.70	–	–	200	61.0	2060	934.2	33.7	0.95
5	129	1400	634.9	5.563	141.3	0.245	6.20	–	–	150	45.8	2100	952.4	41.3	1.17
6	155	1840	834.5	6.625	168.3	0.266	6.80	–	–	100	30.5	1840	834.5	38.9	1.10

[1] For more information only; not a spec requirement.

NOTE: Length = 10 ft. (3.05m) with a tolerance of +/- .25" (6.35mm).

* NEMA Standard

Allied Tube UL REGISTERED FIRM 41654 A2106 ISO 9002

tyco / Flow Control / Allied Tube & Conduit
16100 S. Lathrop Avenue, Harvey, IL 60426
(708) 339-1610 Ph. (708) 339-0615 Fax
www.alliedtube.com

© Allied Tube & Conduit Printed in U.S.A. 5/01 ATC-L-1128-6

Contractor:	Total Electrical Construction Co., Inc.		
Date:	06/19/09		
Project:	WO#12 – South Wing Emergency Stair Repair		
Contract:	BT-200.200		
Item:	Hex Head Nuts		
Spec Section:	16190 – Supporting Devices		
Page:	16190-6		
Paragraph:	2.04		
Drawing No.:	-		
Submittal No.:	16190-11	**Rev:**	0
Approved By:	Michael Lipari		

16190-011
200.200 W.O.12

Heavy Hex Nuts

Tanner BOLT NUT CORP.

Product Description

A six sided internally threaded fastener, which is both thicker and wider than a same-sized finished nut. Nuts size 7/16 and smaller shall be double chamfered. Larger sizes are either double chamfered or chamfered on top with a washer faced bearing surface.

The strongest of all comparably graded nuts because of its greater length of thread engagement and greater resistance to dilation (widening or stretching). Grade-A nuts are used with low carbon heavy hex bolts. Grade-C nuts are recommended for use with A-325 structural bolts. Grade-2H nuts are recommended for use with bolts in high-pressure and high-temperature applications.

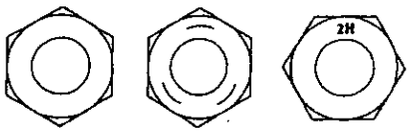

Grade A Grade C Grade 2H

size as Needed

Heavy Hex Nuts *Plain Steel & Zinc Plated*

Grade A

SIZE	GRADE A PLAIN STEEL	GRADE A ZINC PLATED	BOX QTY.
1/4"	25CNHH	25CNHHZ	100
5/16"	31CNHH	31CCNHHZ	100
3/8"	37CNHH	37CNHHZ	100
7/16"	43CNHH	43CNHHZ	100
1/2"	50CNHH	50CNHHZ	100
5/8"	62CNHH	62CNHHZ	25
3/4"	75CNHH	75CNHHZ	25
7/8"	87CNHH	87CNHHZ	15
1"	100CNHH	100CNHHZ	10
1-1/4"	125CNHH	125CNHHZ	5
1-1/2"	150CNHH	150CNHHZ	5

• *Grade A Heavy Hex Nuts are also available in bulk cartons.*

Heavy Hex Nuts *Plain Steel*

A563 Grade C/A194 Grade 2H

SIZE	GRADE C PLAIN STEEL	GRADE 2H PLAIN STEEL	BOX QTY.
1/2"	50CNA325	50CNH2H	1000
5/8"	62CNA325	62CNH2H	800
3/4"	75CNA325	75CNH2H	500
7/8"	87CNA325	87CNH2H	300
1"	100CNA325	100CNH2H	250
1-1/4"	125CNA325	125CNH2H	150
1-1/2"	150CNA325	150CNH2H	75

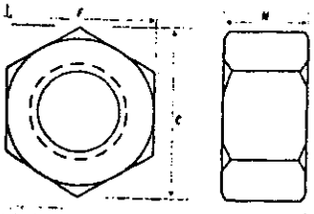

Dimensions

DIAMETER	WIDTH ACROSS FLATS (W) BASIC	WIDTH ACROSS FLATS (W) MAX	WIDTH ACROSS FLATS (W) MIN	WIDTH ACROSS CORNERS (E) MAX	WIDTH ACROSS CORNERS (E) MIN	HEIGHT (H) BASIC	HEIGHT (H) MAX	HEIGHT (H) MIN
1/4"	1/2"	.500	.488	.577	.556	15/64"	.25	.218
5/16"	9/16"	.562	.546	.650	.622	19/64"	.314	.280
3/8"	11/16"	.688	.669	.794	.763	23/64"	.377	.341
7/16"	3/4"	.750	.728	.866	.830	27/64"	.441	.403
1/2"	7/8"	.875	.850	1.010	.969	31/64"	.504	.464
9/16"	15/16"	.938	.909	1.083	1.037	35/64"	.568	.526
5/8"	1-1/16"	1.062	1.031	1.227	1.175	39/64"	.631	.587
3/4"	1-1/4"	1.250	1.212	1.443	1.382	47/64"	.758	.710
7/8"	1-7/16"	1.438	1.394	1.660	1.589	55/64"	.885	.833
1"	1-5/8"	1.625	1.575	1.876	1.796	63/64"	1.012	.956
1-1/4"	2"	2.000	1.938	2.309	2.209	1-7/32"	1.251	1.187
1-1/2"	2-3/8"	2.375	2.300	2.742	2.622	1-15/32"	1.505	1.433

Contractor:	Total Electrical Construction Co., Inc.		
Date:	06/19/09		
Project:	WO#12 – South Wing Emergency Stair Repair		
Contract:	BT-200.200		
Item:	Hex Head Bolts		
Spec Section:	16190 – Supporting Devices		
Page:	16190-6		
Paragraph:	2.04		
Drawing No.:	-		
Submittal No.:	16190-12	**Rev:**	0
Approved By:	Michael Lipari		

16190-012
200.200 W.O. 12

FASTENERS

Hex Head Tap Bolts *Fully Threaded Zinc Plated*

Tanner BOLT NUT CORP.

Hex Head Tap Bolts

Tap Bolts are hex head bolts threaded up to the head, with a machined point and a fully threaded shank. Tap bolts are used instead of a stud and nut.

Tap Bolts have tolerances similar to those of cap screws and essentially serve as fully threaded cap screws. Tanner offers Tap Bolts in Grade 2 steel with a zinc plated finish.

Select sizes are also available in Grade 5 and Grade 8.

Please contact a Tanner sales representative for further information. Shorter length bolts can be purchased as hex head cap screws. ***Please refer to pages 18 through 22.***

Hex Head Tap Bolts, *Fully Threaded Zinc Plated*

1/4"-20 Diameter

LENGTH	ITEM CODE GRADE 2	BOX QTY.
1"	25C100BTAPZ	100
1-1/4"	25C125BTAPZ	100
1-1/2"	25C150BTAPZ	100
1-3/4"	25C175BTAPZ	100
2"	25C200BTAPZ	100
2-1/4"	25C225BTAPZ	100
2-1/2"	25C250BTAPZ	100
2-3/4"	25C275BTAPZ	100
3"	25C300BTAPZ	100
3-1/4"	25C325BTAPZ	100
3-1/2"	25C350BTAPZ	100
4"	25C400BTAPZ	100
4-1/2"	25C450BTAPZ	100
5"	25C500BTAPZ	100
5-1/2"	25C550BTAPZ	100
6"	25C600BTAPZ	100

5/16"-18 Diameter

LENGTH	ITEM CODE GRADE 2	BOX QTY.
1"	31C100BTAPZ	100
1-1/4"	31C125BTAPZ	100
1-1/2"	31C150BTAPZ	100
1-3/4"	31C175BTAPZ	100
2"	31C200BTAPZ	100
2-1/4"	31C225BTAPZ	100
2-1/2"	31C250BTAPZ	100
2-3/4"	31C275BTAPZ	100
3"	31C300BTAPZ	100
3-1/4"	31C325BTAPZ	100
3-1/2"	31C350BTAPZ	50
4"	31C400BTAPZ	50
4-1/2"	31C450BTAPZ	50
5"	31C500BTAPZ	50
5-1/2"	31C550BTAPZ	50
6"	31C600BTAPZ	50

3/8"-16 Diameter

LENGTH	ITEM CODE GRADE 2	BOX QTY.
1"		
1-1/4"	37C125BTAPZ	100
1-1/2"	37C150BTAPZ	100
1-3/4"	37C175BTAPZ	100
2"	37C200BTAPZ	100
2-1/4"	37C225BTAPZ	50
2-1/2"	37C250BTAPZ	50
2-3/4"	37C275BTAPZ	50
3"	37C300BTAPZ	50
3-1/4"	37C325BTAPZ	50
3-1/2"	37C350BTAPZ	50
4"	37C400BTAPZ	50
4-1/2"	37C450BTAPZ	50
5"	37C500BTAPZ	50
5-1/2"	37C550BTAPZ	50
6"	37C600BTAPZ	50

1/2"-13 Diameter

1-1/2"	50C150BTAPZ	50
1-3/4"	50C175BTAPZ	50
2"	50C200BTAPZ	50
2-1/4"	50C225BTAPZ	50
2-1/2"	50C250BTAPZ	50
2-3/4"	50C275BTAPZ	50
3"	50C300BTAPZ	50
3-1/4"	50C325BTAPZ	50
3-1/2"	50C350BTAPZ	25
4"	50C400BTAPZ	25
4-1/2"	50C450BTAPZ	25
5"	50C500BTAPZ	25
5-1/2"	50C550BTAPZ	25
6"	50C600BTAPZ	25

5/8"-11 Diameter

1-1/2"	62C150BTAPZ	25
1-3/4"	62C175BTAPZ	25
2"	62C200BTAPZ	25
2-1/4"	62C225BTAPZ	25
2-1/2"	62C250BTAPZ	25
2-3/4"	62C275BTAPZ	25
3"	62C300BTAPZ	25
3-1/4"	62C325BTAPZ	25
3-1/2"	62C350BTAPZ	25
4"	62C400BTAPZ	25
4-1/2"	62C450BTAPZ	25
5"	62C500BTAPZ	25
5-1/2"	62C550BTAPZ	25
6"	62C600BTAPZ	25

3/4"-10 Diameter

1-1/2"		
1-3/4"		
2"	75C200BTAPZ	20
2-1/4"	75C225BTAPZ	20
2-1/2"	75C250BTAPZ	20
2-3/4"	75C275BTAPZ	20
3"	75C300BTAPZ	20
3-1/4"	75C325BTAPZ	20
3-1/2"	75C350BTAPZ	20
4"	75C400BTAPZ	20

Please see Page 43 for Tanner's Bucket of Bolts!

Eyebolts w/Nuts

Eye Bolts

Eyebolts are the "turned" or "bent" type. Made from 1010 low carbon steel and zinc plated. Rolled Thread. Furnished with finished hex nuts.

Eyebolts w/Nuts *Steel Zinc Plated*

ITEM CODE	THREAD SIZE	OVERALL LENGTH	THREAD LENGTH	STEM LENGTH	I.D. EYE	BOX QTY.
LAR E2	10-24(3/16")	2"	1-3/16"	1-7/16"	9/32"	20
LAR E4S2	1/4"-20	2"	7/8"	1-1/16"	9/16"	20
LAR E4S3	1/4"-20	3"	1-3/4"	2"	9/16"	20
LAR E4A	1/4"-20	4"	2-3/4"	3"	9/16"	10
LAR E4B	1/4"-20	5"	3-1/4"	4"	9/16"	10
LAR E5A	5/16"-18	4"	2-1/4"	2-3/4"	3/4"	10
LAR E5B	5/16"-18	5"	3-1/4"	3-3/4"	3/4"	10
LAR E6	3/8"-16	4"	2-1/8"	2-3/8"	1"	10
LAR E6A	3/8"-16	5"	3-1/8"	3-3/8"	1"	10
LAR E6AB	3/8"-16	6"	3-1/4"	4-1/8"	1"	10
LAR E6C	3/8"-16	8"	3-1/4"	6-3/8"	1"	10
LAR E8	1/2"-13	6"	3-3/4"	4"	1-1/4"	10

Contractor:	Total Electrical Construction Co., Inc.		
Date:	06/19/09		
Project:	WO#12 – South Wing Emergency Stair Repair		
Contract:	BT-200.200		
Item:	Washers		
Spec Section:	16190 – Supporting Devices		
Page:	16190-6		
Paragraph:	2.04		
Drawing No.:	-		
Submittal No.:	16190-13	**Rev:**	0
Approved By:	Michael Lipari		

16190-013

200.200 W.O. #12

Flat Washers * Size as Needed

Tanner BOLT NUT CORP.

Product Description

Machine Screw Flat Washers are the smallest type of flat washer with an outside diameter equal to slightly twice the size of the inside diameter.

Countersunk Finishing Washers are a formed circular washer designed for use with 82° countersunk flat or oval head screws. The washer provides additional bearing area on the material being fastened and can be used to give a neat, finished appearance. Supplied with nickel plating.

Fender Washers are flat washers with significantly more surface area than a USS or SAE washer. They are also made from a thinner gauge metal than most flat washers. Used where an extra wide bearing surface is required. Originally designed for auto body repair work, they are also used in sheet metal, plumbing, and electrical work. Also used to attach signs to posts and install drywall and wood paneling.

Grade 8 Hardened Flat Washers are dimensionally similar to their USS washer counterparts, but with tighter tolerances on thickness, and manufactured from a higher grade of steel. They are to be used specifically with high-strength hardened steel bolts.

Machine Screw Flat Washers

Steel Zinc Plated

SIZE	ITEM CODE	BOX QTY.	INSIDE DIAMETER MIN. - MAX.	OUTSIDE DIAMETER MIN. - MAX.	THICKNESS MIN. - MAX.
#4	4NWMSZ	1000	.120 -.130	.276 -.286	.022 -.033
#6	6NWMSZ	1000	.145 -.155	.370 -.380	.028 -.036
#8	8NWMSZ	1000	.165 -.175	.370 -.380	.028 -.036
#10	10NWMSZ	1000	.199 -.209	.433 -.443	.028 -.036
#12	12NWMSZ	1000	.222 -.232	.495 -.505	.044 -.052

Countersunk Finishing Washers

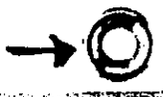

Steel Nickel Plated

SIZE	ITEM CODE	BOX QTY.
#6	6NWFION	100
#8	8NWFION	100
#10	10NWFION	100
#12	12NWFION	100
#14	14NWFION	100

Fender Washers

Steel Zinc Plated

SIZE	OUTSIDE DIAMETER	ITEM CODE PKG.	BOX QTY.	ITEM CODE BULK	BOX QTY.	ITEM CODE BULK	BOX QTY.
3/16"	1"	18N100WFEZ/C	100	18N100WFEZ	350	18N100WFEZ/BULK	3500
3/16"	1-1/4"	18N125WFEZ/C	100	18N125WFEZ	300	18N125WFEZ/BULK	3000
1/4"	1"	25N100WFEZ/C	100	25N100WFEZ	375	25N100WFEZ/BULK	3750
1/4"	1-1/4"	25N125WFEZ/C	100	25N125WFEZ	232	25N125WFEZ/BULK	2325
1/4"	1-1/2"	25N150WFEZ/C	100	25N150WFEZ	155	25N150WFEZ/BULK	1550
1/4"	2"	25N200WFEZ/C	100	25N200WFEZ	81	25N200WFEZ/BULK	810
5/16"	1-1/4"	31N125WFEZ/C	100	31N125WFEZ	240	31N125WFEZ/BULK	2400
5/16"	1-1/2"	31N150WFEZ/C	100	31N150WFEZ	162	31N150WFEZ/BULK	1625
3/8"	1"	37N100WFEZ/C	100	37N100WFEZ	300	37N100WFEZ/BULK	3000
3/8"	1-1/4"	37N125WFEZ/C	100	37N125WFEZ	235	37N125WFEZ/BULK	2350
3/8"	1-1/2"	37N150WFEZ/C	100	37N150WFEZ	165	37N150WFEZ/BULK	1650
3/8"	2"	37N200WFEZ/C	100	37N200WFEZ	100	37N200WFEZ/BULK	1000
1/2"	1-1/2"	50N150WFEZ/C	100	50N150WFEZ	200	50N150WFEZ/BULK	2000
1/2"	2"	50N200WFEZ/C	100	50N200WFEZ	95	50N200WFEZ/BULK	950

Please see Page 43 for Tanner's Bucket of Bolts!

Grade 8 Hardened Flat Washers

Steel Zinc Yellow

SIZE	ITEM CODE USS	ITEM CODE SAE	ITEM CODE SAE THICK	THICKNESS MIN.	THICKNESS EXTRA THICK MAX.	BOX QTY.
1/4"	25NWUSTY	25NWSATY	25NWEXTY	0.064	0.080	100
5/16"	31NWUSTY	31NWSATY	31NWEXTY	0.079	0.093	100
3/8"	37NWUSTY	37NWSATY	37NWEXTY	0.079	0.093	100
7/16"	43NWUSTY	43NWSATY	43NWEXTY	0.090	0.106	100
1/2"	50NWUSTY	50NWSATY	50NWEXTY	0.122	0.146	100
9/16"	56NWUSTY	56NWSATY	56NWEXTY	0.122	0.146	50
5/8"	62NWUSTY	62NWSATY	62NWEXTY	0.136	0.160	50
3/4"	75NWUSTY	75NWSATY	75NWEXTY	0.136	0.160	50
7/8"	87NWUSTY	87NWSATY	87NWEXTY	0.136	0.160	25
1"	100NWUSTY	100NWSATY	100NWEXTY	0.136	0.160	25

FASTENERS

Contractor:	Total Electrical Construction Co., Inc.		
Date:	06/19/09		
Project:	WO#12 – South Wing Emergency Stair Repair		
Contract:	BT-200.200		
Item:	Rod Coupling Nuts		
Spec Section:	16190 – Supporting Devices		
Page:	16190-6		
Paragraph:	2.04		
Drawing No.:	-		
Submittal No.:	16190-14	**Rev:**	0
Approved By:	Michael Lipari		

16190-014

200.200 W.O. #12

Threaded Rod Steel

Threaded Rod Steel

Threaded rod is produced from cold-rolled steel. Rolled threads offer increased strength, uniform accuracy and a higher degree of surface finish than machine-cut threads, in addition to being lower cost.
Threaded rod can be used with standard nuts and washers (sold separately), and may be used in standard stock lengths or cut by customer to the length required.

Special order lengths are available, contact your Tanner sales representative

Threaded Rod Steel *6' Lengths*

SIZE	ITEM CODE ZINC PLATED	ITEM CODE TO BE GALVANIZED
1/4"-20	25C7200RATZ	25C7200RATH
5/16"-18	31C7200RATZ	31C7200RATH
3/8"-16	37C7200RATZ	37C7200RATH
1/2"-13	50C7200RATZ	50C7200RATH
5/8"-11	62C7200RATZ	62C7200RATH
3/4"-10	75C7200RATZ	75C7200RATH
7/8"-9	87C7200RATZ	87C7200RATH
1"-8	100C7200RATZ	100C7200RATH
1-1/4"-7	125C7200RATZ	125C7200RATH
1-1/2"-6	150C7200RATZ	150C7200RATH

Bundle Quantities & Weights - 6' Lengths

SIZE	QTY	LBS	PCS	WT
1/4"-20	12	50	300	36
5/16"-18	20	35	210	42
3/8"-16	29	25	150	43.5
1/2"-13	54	12	72	39
5/8"-11	83	8	48	40
3/4"-10	125	5	30	37.5
7/8"-9	170	4	24	41
1"-8	223	2	12	27
1-1/4"-7	354	2	12	42
1-1/2"-6	512	1	6	30

Size as needed

↓

Rod Coupling Nuts

Rod Coupling Nuts

Rod Coupling Nuts have extended length for joining two pieces of rod firmly together. Reducing Coupling Nuts are used to connect two threaded with different thread sizes. Each size is threaded approximately halfway through.

Rod Coupling Nuts *Steel Zinc Plated*

ITEM CODE	THREAD SIZE	OVERALL LENGTH	HEX SIZE	QTY
25CNCOZ	1/4-20"	7/8"	3/8"	100
31CNCOZ	5/16"-18	1-1/8"	1/2"	100
37CNCOZ/SH	3/8"-16	1-1/8"	5/8"	50
37CNCOZ	3/8"-16	1-3/4"	5/8"	50
50CNCOZ	1/2"-13	1-3/4"	5/8"	50
62CNCOZ	5/8"-11	2-1/8"	13/16"	25
75CNCOZ	3/4"-10	2-1/4"	1"	25
87CNCOZ	7/8"-9	2-1/2"	1-1/4"	15
100CNCOZ	1"-8	2-3/4"	1-1/4"	10

• Hot Dip Galvanized parts available upon request.

Reducing Rod Coupling Nuts *Steel Zinc Plated*

MI R36	1/4"-20 to 3/8"-16	1"	1/2"	100
MI R37	1/4"-20 to 1/2"-13	1-1/4"	1/2"	50
MI R38	5/16"-18 to 3/8"-16	1"	1/2"	100
MI R39	5/16"-18 to 1/2"-13	1-1/4"	5/8"	50
MI R40	3/8"-16 to 1/2"-13	1-1/4"	5/8"	50
MI R41	3/8"-16 to 5/8"-11	1-1/2"	3/4"	50
MI R43	1/2"-13 to 5/8"-11	1-1/2"	3/4"	50
MI R44	3/8"-16 to 3/4"-10	2"	7/8"	25
MI R45	1/2"-13 to 3/4"-10	2"	7/8"	25
MI R46	5/8"-11 to 3/4"-10	2"	7/8"	25
MI R47	3/4"-10 to 7/8"-9	1-3/4"	1-1/4"	25

Please see Page 43 for Tanner's Bucket of Bolts!

Materials Engineering Unit

241 Erie Street, Room 234
Jersey City, NJ 07310
Tel: 201-216-2952 **Fax:** 201-216-2949

THE PORT AUTHORITY OF NY & NJ

TRANSMITTAL
No. 00032

PROJECT: WO12 South Wing Emerg. Stair Repairs

DATE: 8/19/2009

TO: VRH Construction Corp.
c/o Port Authority of NY & NJ
625 Eight Ave. 2nd Flr. North Bldg
New York, NY 10018

CONTRACT: PABT-200200 WO12

ATTN: **Anthony Carnabuci**

	STATUS LEGEND:	
☐ Shop Drawings	Approved (APP)	New Item (NEW)
☑ Letter	Approved as Corrected (AAC)	Not Approved (NA)
☐ Prints	Approved as Noted (AAN)	Not Reviewed (NR)
☐ Change Order	For Record Only (FRO)	Review With Comments (RWC)
☐ Plans	For Your Information (FYI)	Review With No Comments (RWNC)
☐ Samples	Incomplete (INC)	Superseded (SUPS)
☐ Specifications		
☑ Other: Made from Submittal	☐ Attached ☐ Separate Cover Via: Mail	
	Review and Comment	

SUBMITTAL	REV.	DATE	DESCRIPTION	Remark	STATUS
09910-0007	R000	8/19/2009	Desc: Quality Assurance & Quality Control Plan - Fine Painting; Spec. Section 09910, Part 1.04 C.2. and Appendix A	#1-4	NA

Remarks: 1. The Quality Control Plan did not contain the information required in Spec. Section 09910, Part 1.04 C.2., Items a. b. & f.
2. Standards and specifications for inspection purposes did not included SSPC PA2 for DFT and SSPC VIS 3 for surface preparation.
3. Ambient conditions did not include relative humidity and dew point.
4. The inspection report did not contain entries for relative humidity, dew point, DFT readings, and QC staff signature.

Material(s), which do not conform to the contract documents, will be subject to rejection at the job site by the Resident Engineer.

If you have any questions, please call John Bullard of my staff at (201) 216-2993. Our fax number is (201) 216-2949.

Signed:
Casimir Bognacki, P.E.
Chief of Materials Engineering

CC: P. Salvatore w/att., A. Kaprielian w/att., J. Bullard, MF

A

ARE SEC MF [illegible]
PABT PROJECT MANAGER
AUG 26 2009

Expedition ®

LETTER OF TRANSMITTAL

VRH
CONSTRUCTION CORP.
General Contractors & Construction Managers

Action Key
1 For your records and/or use
2 For price quotation
3 For approval
4 Approved/Reviewed
5 Approved as noted: Re-submission not required
6 Approved as noted: Revise and re-submit
7 Rejected: Re-submit per contract documents

To	The Port Authority of NY & NJ	Transmittal No.	00034
	Two Gateway Center	Job No.	2030WO12
	15th Floor	Project	PANY/NJ-bt-200.200 WO 12
	Newark, NJ 07102		South Wing Emergency Stair Repairs
Attention	Ka Kei Chan		
Phone No.	973-792-4629 Fax 973-792-4602		

We are sending you herewith the following: ☐ Drawings ☒ Shop Drawings ☐ Samples ☐ Specifications ☒ Other:

Via: ☒ Attached ☐ Separate Cover Via Mail

Quantity	Drawing/Submittal No.	Description	Action
8	09910-007	Dwg: Title: Quality Assurance & Quality Control Desc: Quality Assurance & Quality Control Plan	3

RECEIVED AUG 14 2009

Remarks:

cc: P. Salvatore; A. Kaprielian/PANYNJ

Signed Anthony Carnabuci

By Anthony J. Carnabuci

Date 8/7/2009

625 Eighth Avenue
2nd Flr, North Building
New York, NY 10018

Phone
212-629-6187
Fax
212-629-9243

VRH Construction Corp.

625 Eighth Avenue
2nd Flr, North Building
New York, NY 10018

Phone: 212-629-6187
Fax: 212-629-9243

SUBMITTAL NO. 09910-007
PACKAGE NO: 09910

TITLE: Quality Assurance & Quality Control
PROJECT: PANY/NJ-bt-200.200 WO 12
DRAWING:
STATUS: 3
BIC: PANYNJ

REQUIRED START: 8/7/2009
REQUIRED FINISH: 8/21/2009
DAYS HELD: 0
DAYS ELAPSED: 0
DAYS OVERDUE: -14

RECEIVED FROM		SENT TO		RETURNED BY		FORWARDED TO	
FINE	GS	PANYNJ	KC	PANYNJ	KC	FINE	GS

Revision No.	Description / Remarks	Received	Sent	Returned	Forwarded	Status	Sepias	Prints	Drawing Date	Held	Elapsed
000	Quality Assurance & Quality Control Plan	8/7/2009	8/7/2009			3	0	8		0	0

QUALITY ASSURANCE
and
QUALITY CONTROL PLAN

Fine Painting
1160 RT 22
MOUNTAINSIDE NJ 07092

Prepared for

South Wing Emergency Repairs
BT 200.200 – WO # 12

09910-007
200.200 W.O. 12

SECTION 1.0 GENERAL

The Quality Control/Quality Assurance (QA/QC) Plan describes the process to be Utilized by Fine Painting in the surface preparation and painting of the 6 stairs at the Port Authority Bus Terminal Facility.

All work shall be done in accordance with PANYNJ Specification Section 09910 "Painting" The QA/QC Plan is prepared in accordance with Appendix "A".

SECTION 2.0 REFERENCES

Reference documents, as they pertain to this project, are as follows:

SSPC- Structural Steel Painting Council:

- SSPC-SP Surface Preparation Specification:
  - ✓ SSPC -SP1 – Solvent cleaning
  - ✓ SSPC -SP2 – Hand tool Cleaning
  - ✓ SSPC – SP3 – Power tool Cleaning
  - ✓ SSPC – SP11-Power tool cleaning
- ASTM D 1186
- ASTM D 3359
- ASTM D 4414

SECCTION 3.0 INSPECTION PROCEDURES

3.1 GENERAL

Following is an outline of typical inspection procedures to be followed at this project:

1. Pre-job meeting: The Quality Control Officer should attend the pre-job meeting. At the meeting any ambiguities in the specifications should be discussed.

2. Specifications and Submittal: A copy of the specifications should be maintained at the job site. The QCO and the Site Supervisor shall be very familiar with all QC issues and requirements of the specifications.

   Before using any paint system, submittals shall be approved by PANYNJ and the Submittals should be physically in the hands of the field personnel.

3. Product Data Sheet and MSDS: Product data sheets and Material Safety Data Sheets of all approved paints should be on site, read and compared with specifications.

4. Ambient Conditions: Ambient conditions such as ambient temperature and surface temperature shall be monitored daily to ensure that meet the requirement of the specific product being applied.

5. Wet/ Dry Film Thickness: Wet Film Thickness (WFT) Dry Film thickness (DFT) shall be measured and record in the respective forms to ensure that meets the requirement of the specific product being applied.

6. Mixing: Only labeled, sealed containers are to be used. Unlabeled containers shall not be brought to the site.

3.2 THE DAILY INSPECTION REPORT

The completion and accurate recording of the information collected to complete the Daily Inspection From is essential to the production of a high Quality performance. The Daily inspection form should be completed every day except during seasonal shut down

The Daily Inspection Report shall be completed in the following manner:

Record the following Information:

Your Name, The Owners Representative Name, Client Name, Facility Name, Date, Location, Your Start Time, Your Stop Time, These are self explanatory.

Weather- record clear, cloudy, rain, snow, partly sunny.

Surface Preparation- Specified and Actual- record what surface prep method was specified and the actual surface prep.

Coating Type- record Prime coat, Intermediate Coat, Splash coat or Top Coat.

Lot and batch Numbers- record lot and batch Numbers located on the cans of paint being used.

Application times- record the time application started and stooped for each coat.

Surface Preparation and Quality Item- These items are self explanatory and will be covered in the QC initial training.

Note- record any unusual events or occurrences that could effect the coating or on the site in general.

Specific Deficiencies, Comments, And Special Instructions- Record these events on the space allotted on the Inspection Report.

3.3 LIST OF QUALITY CONTROL EQUIPMENT

Following is the list of quality control equipment that shall be used for this project.

1. WET FILM THICKNESS GAUGE

2. WFT for each coating shall be submitted to PANYNJ as part of the daily QC Report. The submittal and the Product data sheet shall be physically in the hands of the field personnel.

3. DRY FILM THICKNESS GAUGE
   Measurement from the Dry paint Thickness with Magnetic Gauges shall be recorded on the daily QC Report.

Abrasive Blasting shall **NOT** be performed on this project as it is not in the scope of this contract.
In the future, is abrasive blasting needs to be performed, an amendment shall be provided to include testing requirements as per the specification.

SECTION 4.0 PROCEDURES FOR USING WET FILM THICKNESS GAUGE

Description

The wet film thickness gauge had four sides. The edge of each side has two end points of equal length with progressively shorter legs between them. Numbers on each leg represent the distance (in mils) between the legs and the end points. The gauge permits the applicator to approximate the amount of coating being applied while wet, in order to better assure that a proper dry film thickness will result.

Reference

ASTM D4414 "Standard Practice for Measurement of Wet Film Thickness by Notch Gauges."

Method

1. Place the instrument squarely and firmly onto the surface to be measured immediate after the coating application. Use the gauge along the length, not the width of curved surfaces. Avoid surface irregularities which may distort readings.
2. Remove the gauge from the surface and note the highest step covered by coating.
3. The wet film thickness lies between the highest coated step and the next uncoated step.

Helpful Hints

1. It is important to remember that wet film thicknesses are an approximation of thickness only.
2. Do not drag, twist or slide the gauge in the wet coating.
3. Clean the gauge after each use.

SECTION 5.0 PROCEDURES FOR OPERATING FIXED PROBE DRY FILM THICKNESS GAUGE- POSITECTOR 6000

Description

The Positector 6000 or similar gauges is a non-destructive tool used to measure coating thickness. There are two models available for measuring dry paint film thickness on substrates.

1. "F" models used to measure the thickness of non-magnetic coatings on ferrous metal (e.g., steel and iron).

2. "N" models used to measure the thickness of non-conductive on non-ferrous metal (e.g., aluminum, brass, copper, etc.).

Reference

ASTM D1186 "Standard Test Methods for Nondestructive Measurement of Dry Film Thickness of Nonmagnetic Coatings Applied to a Ferrous Base"

Method

1. Slide the probe cover open.
2. The sensing probe should be clean and free of coating residue or other contaminants.
3. Verify instrument calibration using National Institute of Standards and Technology (NIST) standards or plastic shims (see calibration below).
4. Place the probe of the instrument on the surface to be measured. When a dry film Thickness measurement is obtained; the gauge will "beep" twice and display the measurement. If the gauge is not placed perpendicular to the surface, it will "Beep" at a higher pitch until it is positioned correctly.
5. To take a second measurement, lift the gauge from the surface and repeat.

Daily QC Report Form and Checklist

CONTRACTOR: FINE PAINTING DATE:_____

NAME OF PROJECT: **South Wing Emergency Repairs (BT 200.200)**

G C: **V R H**

Time _____Ambient Temp _____ °F Time _____Ambient Temp _____ °F

Area of Work _____ _____

Surface Prep _____ _____

Surface Temperature _____ _____

Paint Type _____ _____

Batch Numbers _____ _____

Wet Mil Readings _____ _____

Remarks

_____

_____

_____

_____
FOREMAN (Print and sign name)

Materials Engineering Unit

241 Erie Street, Room 234
Jersey City, NJ 07310
Tel: 201-216-2952 **Fax:** 201-216-2949

THE PORT AUTHORITY OF NY & NJ

TRANSMITTAL
No. 00034

PROJECT: WO12 South Wing Emerg. Stair Repairs

DATE: 8/27/2009

TO: VRH Construction Corp.
c/o Port Authority of NY & NJ
625 Eight Ave. 2nd Flr. North Bldg
New York, NY 10018

CONTRACT: PABT-200.200 WO12

ATTN: **Anthony Carnabuci**

		STATUS LEGEND:
☐ Shop Drawings	Approved (APP)	New Item (NEW)
☑ Letter	Approved as Corrected (AAC)	Not Approved (NA)
☐ Prints	Approved as Noted (AAN)	Not Reviewed (NR)
☐ Change Order	For Record Only (FRO)	Review With Comments (RWC)
☐ Plans	For Your Information (FYI)	Review With No Comments (RWNC)
☐ Samples	Incomplete (INC)	Superseded (SUPS)
☐ Specifications		
☑ Other: Made from Submittal	☐ Attached ☐ Separate Cover Via: Mail	
Review and Comment		

SUBMITTAL	REV.	DATE	DESCRIPTION	Remark	STATUS
03200-0001	R001	8/25/2009	Desc: Catalog Cut of Red Head® C6, an Epoxy Adhesive to be used with threaded rod or rebar anchors. Ref.: CONCRETE REPAIR TYPE D NOTES No. 6 on DWG. S006.		APP
03730-0001	R001	8/25/2009	Desc: Product Data Sheet of Sika Armatec® 110 EpoCem®, a bonding agent and reinforcement protection	#1	AAN
07920-0001	R001	8/25/2009	Desc: Catalog Cut of Dow Corning Catalog Cut of Dow Corning® 795 Silicone Building Sealant Ref.: STAIRWAY REPAIR NOTES No. 7 on DWG. G003.		APP

Remarks: 1. Prior to applying the Sika Armatec® 110 EpoCem®, clean existing reinforcing bars and wire mesh in accordance with SSPC-SP6.

Approvals shall not relieve the Contractor of any responsibility as required by the Contract or waive any further authority of the Engineer or modify or waive any provision of the subject Contract with regard to this material(s) or its approval.

Material(s), which do not conform to the contract documents, will be subject to rejection at the job site by the Resident Engineer.

If you have any questions, please call Dilip Nisraiyya of my staff at (201) 216-2973. Our fax number is (201) 216-2949.

Materials Engineering Unit

241 Erie Street, Room 234
Jersey City, NJ 07310
Tel: 201-216-2952 **Fax:** 201-216-2949

THE PORT AUTHORITY OF NY & NJ

TRANSMITTAL

No. 00034

PROJECT: WO12 South Wing Emerg. Stair Repairs

DATE: 8/27/2009

TO: VRH Construction Corp.
c/o Port Authority of NY & NJ
625 Eight Ave. 2nd Flr. North Bldg
New York, NY 10018

CONTRACT: PABT-200.200 WO12

ATTN: **Anthony Carnabuci**

	STATUS	LEGEND:
☐ Shop Drawings	Approved (APP)	New Item (NEW)
☑ Letter	Approved as Corrected (AAC)	Not Approved (NA)
☐ Prints	Approved as Noted (AAN)	Not Reviewed (NR)
☐ Change Order	For Record Only (FRO)	Review With Comments (RWC)
☐ Plans	For Your Information (FYI)	Review With No Comments (RWNC)
☐ Samples	Incomplete (INC)	Superseded (SUPS)
☐ Specifications		
☑ Other: Made from Submittal	☐ Attached ☐ Separate Cover Via: Mail	
Review and Comment		

CC: P. Salvatore w/att., A. Kaprielian w/att., D. Nisraiyya, MF

Signed:

Casimir Bognacki, P.E.
Chief of Materials Engineering

Expedition ®

LETTER OF TRANSMITTAL

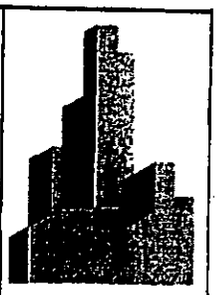

VRH
CONSTRUCTION CORP.
General Contractors & Construction Managers

Action Key
1 For your records and/or use
2 For price quotation
3 For approval
4 Approved/Reviewed
5 Approved as noted: Re-submission not required
6 Approved as noted: Revise and re-submit
7 Rejected: Re-submit per contract documents

To	The Port Authority of NY & NJ	Transmittal No.	00036
	Two Gateway Center	Job No.	2030WO12
	15th Floor	Project	PANY/NJ-bt-200.200 WO 12
	Newark, NJ 07102		South Wing Emergency Stair Repairs
Attention	Ka Kei Chan		
Phone No.	973-792-4629 Fax 973-792-4602		

We are sending you herewith the following: ☒ Drawings ☒ Shop Drawings ☐ Samples ☐ Specifications ☒ Other:

Via: ☒ Attached ☐ Separate Cover Via Mail

Quantity	Drawing/Submittal No.	Description	Action
0	03730-001 Rev.1	Dwg: Title: Sika Armatec 110 EpcCem Desc: Sika Armatec 110 EpcCem	3
0	03200-001 Rev1	Dwg: Title: Epcon C6 Red Head Desc: Epcon C6 Red Head	3

RECEIVED AUG 14 2009

Remarks: SEE ATTACHED LETTER FROM GRENADIER.

cc: P. Salvatore; A. Kaprielian/PANYNJ

Signed Anthony Cannabuci

By Anthony J. Cannabuci

Date 8/12/2009

625 Eighth Avenue
2nd Flr, North Building
New York, NY 10018

Phone
212-629-6187
Fax
212-629-9243

LETTER OF TRANSMITTAL

Action Key

1 For your records and/or use
2 For price quotation
3 For approval
4 Approved/Reviewed
5 Approved as noted: Re-submission not required
6 Approved as noted: Revise and re-submit
7 Rejected: Re-submit per contract documents

VRH
CONSTRUCTION CORP.
General Contractors & Construction Managers

To	The Port Authority of NY & NJ	Transmittal No.	00035
	Two Gateway Center	Job No.	2030WO12
	15th Floor	Project	PANY/NJ-bt-200.200 WO 12
	Newark, NJ 07102		South Wing Emergency Stair Repairs
Attention	Ka Kei Chan		
Phone No.	973-792-4629 Fax 973-792-4602		

We are sending you herewith the followir ☒ Drawings ☒ Shop Drawings ☐ Samples ☐ Specifications ☒ Other:

Via: ☒ Attached ☐ Separate Cover Via Mail

Quantity	Drawing/Submittal No.	Description	Action
9	07920-001 Rev. 1	Dwg: Title: Sikaflex-1a Desc: Dow Corning 795 Silicone Bldg. Sealant	3

RECEIVED AUG 1 4 2009

Remarks:

cc: P. Salvatore; A. Kaprielian/PANYNJ

Signed Anthony Carnabuci Jr.

By Anthony J. Carnabuci

Date 8/12/2009

625 Eighth Avenue
2nd Flr, North Building
New York, NY 10018

Phone
212-629-6187
Fax
212-629-9243

THE GRENADIER CORPORATION
1590 EAST 233RD STREET
BRONX, NEW YORK 10466
(718) 324-3700 FAX: (718) 994-6477

LETTER OF TRANSMITTAL

TO:	Mr. Anthony J. Carnabuci – Project Manager	August 11, 2009
	VRH Construction Corp.	
	c/o Port Authority of NY & NJ	
	625 Eight Avenue, 2nd Floor North Wing	
	New York, NY 10018	
RE:	Port Authority Bus Terminal - W.O.# 12	Contract# BT-200.200
	South Wing Emergency Stair Repair	

WE ARE SENDING YOU ☒ *ATTACHED* ☐ *UNDER SEPARATE COVER* VIA MAIL THE *FOLLOWING:*

☐ *SAMPLES* ☒ *SUBMITTALS* ☐ *CUTS* ☒ *MSDS*

COPIES	*DATE*	*DESCRIPTION*
10	08/11/09	Grenadier Letter Re: W.O. #12 Submittals
10	08/11/09	Dow Corning 795 – Silicone Building Sealant

07920-001
200.200 W.O. 12

TRANSMITTED:

☒ *FOR YOUR USE* ☐ *AS REQUESTED* ☐ *FOR REVIEW AND COMMENT*

REMARKS:

SIGNED: Jerry Jurczynski

THE GRENADIER
CORPORATION
Pride in Our Reputation

1590 E. 233rd Street
Bronx, New York 10466
(718) 324-3700

August 11, 2009

Mr. Anthony Carnabuci
VRH Construction Corp.
625 8th Avenue, North Building
New York, NY 10018

Re: Work Order # 12 – Submittals

Dear Mr. Carnabuci,
Please be advised of the following:

1. Submittal No. 07920-001 – Sikaflex -1A shall be disregarder and replaced with Dow Corning 795 Silicone Building Sealant, which fulfills requirement of ES-1 Type Sealant. Attached please find 10 copies.

2. Submittal No. 03200-001 – Epcon C6 Red Head is specified on Drawing S006, dated May 14, 2008, Section: Concrete Repair Type D Note # 6. Please advise about use of this product.

3. Submittal No. 03730-001 – Sika Armatec 110 EpcCem – this product shall be used during concrete repair work on exposed steel members, which do not require replacement, as a primer, bonding agent and corrosion inhibitor. Please advise about use of this product.

Should you have any questions please feel free to contact our office at 718-324-3700.

Respectfully Submitted,

Justyna Berebecka
The Grenadier Corporation

Dow Corning® 795 Silicone Building Sealant

DOW CORNING™

1. PRODUCT NAME

Dow Corning® 795 Silicone Building Sealant

2. MANUFACTURER

Dow Corning Corporation
Midland, MI 48686-0994
Phone: (517) 496-6000
FAX: (517) 496-4586

3. DESCRIPTION

Dow Corning 795 Silicone Building Sealant is a one-part, cold-applied, non-sagging silicone material that cures to a medium modulus silicone rubber upon exposure to atmospheric moisture. The cured silicone rubber is durable and flexible enough to accommodate ±50 percent movement of original joint dimension when installed in a properly designed weatherseal joint (see Figure 1). In a properly designed structural glazing joint (see Figure 2), the sealant is strong enough to support glass and other panel materials under high windload.

Dow Corning 795 Silicone Building Sealant offers the following features:

- Versatility – can be used for both high performance structural glazing and weathersealing – all with one product
- Primerless adhesion to many common construction materials
- Excellent weatherability – the sealant is virtually unaffected by sunlight, rain and snow and stays flexible in temperature extremes of -48°C (-55°F) to 149°C (300°F)
- Ease of use – Cold-temperature gunnability, easy to tool and a low-odor cure byproduct

Basic Uses: *Dow Corning* 795 Silicone Building Sealant can be used in most new construction and remedial sealing applications including:

- Structural and nonstructural glazing
- Structural attachment of many panel systems
- Panel stiffener applications
- Weathersealing of most common construction materials including glass, aluminum, steel, painted metal, granite and other stone, concrete, brick and other masonry, EIFS and many plastics
- To apply *Dow Corning*® 123 Silicone Seal

Limitations: *Dow Corning* 795 Silicone Building Sealant should not be used:

- In structural applications without prior review and approval by Dow Corning Corporation Technical Service and Development
- In below-grade applications
- When surface temperatures exceed 50°C (122°F)
- On surfaces that are continuously immersed in water
- On building materials that bleed oils, plasticizers or solvents that may affect adhesion
- On frost-laden or wet surfaces
- In totally confined joints (the sealant requires atmospheric moisture for cure)
- If the sealant is intended to be painted (paints do not typically adhere to most silicone sealants)
- To surfaces in direct contact with food or other food-grade applications

TYPICAL PROPERTIES

These values are not intended for use in preparing specifications.

As Supplied		
	Colors	11 colors; custom colors also available
ASTM C 679	Tack-Free Time at 50% RH, hours	3
	Cure Time at 25°C (77°F) and 50% RH , days	7-14
	Full Adhesion, days	14-21
ASTM C 639	Flow, Sag or Slump, inches	0.1
	Working Time, minutes	20-30
As Cured – After 21 days at 25°C (77°F), 50% RH		
ASTM D 2240	Durometer Hardness, Shore A, points	35
ASTM C 794	Peel Strength on Gloss, lb/in (kg/cm)	32 (5.7)
ASTM C 1135	Tensile Adhesion Strength at 25% extension, psi	40
ASTM C 1135	Tensile Adhesion Strength at 50% extension, psi	55
ASTMC1184	Structural Silicone Specification	Pass
ASTMC1248	Staining (granite, marble, limestone, brick and concrete)	None
As Cured – After 21 Days at 25°C (77°F) and 50% RH, then 10,000 hours in QUV Weatherometer, ASTM G 53		
ASTM C 1135	Tensile Adhesion Strength at 25% extension, psi	35
ASTM C 1135	Tensile Adhesion Strength at 50% extension, psi	50

Specification Writers: Please obtain a copy of the Dow Corning Sales Specification for this product, and use it as a basis for your specifications. It may be obtained from any Dow Corning Sales Office, or from Dow Corning Customer Service in Midland, MI. Call 1-800-322-8723.

• For use as an interior penetration firestop sealing system

This product is neither tested nor represented as suitable for medical or pharmaceutical uses.

Composition and Materials: *Dow Corning* 795 Silicone Building Sealant is a one-part, ready-to-use material that has the consistency of toothpaste. This consistency remains uniform over a wide temperature range from -23 to 50°C (-10 to 122°F), allowing the sealant to be applied easily at most temperatures.

Once cured, the sealant is a medium modulus silicone sealant that adheres primerless to many common construction substrates. When used as a structural sealant, Dow Corning TS&D must review all applications and perform adhesion and compatibility testing to all materials to contact the sealant. When used as either a weatherseal or structural sealant, Dow Corning recommends that field adhesion tests be performed on all materials to ensure adhesion is obtained. For details, refer to the most recent versions of the *Dow Corning Silicone Structural Glazing Manual,* Form No. 62-351, and *Dow Corning Weatherproofing Sealant Guide,* Form No. 62-433.

Packaging: *Dow Corning* 795 Silicone Building Sealant is supplied in 10.3-fl oz (305-mL) disposable plastic cartridges that fit ordinary caulking guns, 20-fl oz (590-mL) sausages and 2- and 4.5-gal (7.5- and 17-L) bulk containers. It can be dispensed by many air-operated guns and most types of bulk dispensing equipment.

Colors: *Dow Corning* 795 Silicone Building Sealant is available in 11 colors: black, white, gray, limestone, bronze, sandstone, adobe tan, dusty rose, rustic brick, blue spruce and charcoal. Custom colors are available upon request.

Applicable Standards: *Dow Corning* 795 Silicone Building Sealant meets or exceeds the test requirements of:

• Federal Specification TT-S-001543A (COM-NBS) Class A for silicone building sealants

• Federal Specification TT-S-00230C (COM-NBS) Class A for one-component building sealants

• ASTM Specification C-920 Type S, Grade NS, Class 25, Use NT, M, G and A

• Canadian Specification CAN2-19.13-M82

4. TECHNICAL DATA

Dow Corning 795 Silicone Building Sealant is virtually unaffected by sunlight, rain, sleet and snow. Its unique weatherability enables it to retain its original design properties even after years of exposure. Joint performance does not change significantly with aging or exposure to weather. Seals remain watertight and weatherproof.

Cured sealant will perform at cold temperatures down to -48°C (-55°F) or at high temperatures up to 149°C (300°F) and will not become brittle, tear or crack. *Dow Corning* 795 Silicone Building Sealant is compatible with most reflective glass and insulating glass units.

5. INSTALLATION

Dow Corning 795 Silicone Building Sealant is uniquely formulated to be used for both structural glazing and weathersealing applications. Joint design determines whether the sealant is to be used as a structural sealant, weatherseal sealant or both.

Structural glazing applications for *Dow Corning* 795 Silicone Building Sealant must be reviewed by the Technical Service staff, Dow Corning Corporation, Building Materials Industries Technical Service and Development.

The following instructions provide a general overview of the installation process. Complete design and installation procedures are outlined in the *Silicone Structural Glazing Manual* for structural glazing applications and the *Weatherproofing Sealant Guide* for weathersealing applications.

Joint Design: The design of a structural glazing joint must be prepared by the design professional, based upon industry-accepted design guidelines.

A typical structural glazing joint is illustrated in Figure 2. Basic design parameters include:

• Glueline thickness must not be less than ¼" (6 mm)

• Structural bite must not be less than glueline thickness

• Structural bite (in inches) must be

Figure 1: Recommended Joint Design and Typical Joint Sealing Configurations (See *Weatherproofing Sealant Guide*, Form No. 62-433)

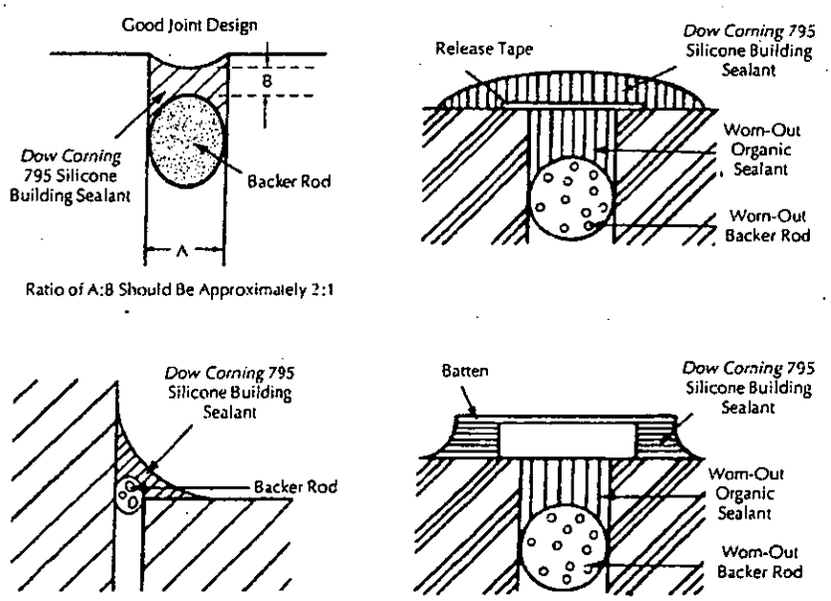

Figure 2: Typical Structural Glazing Design

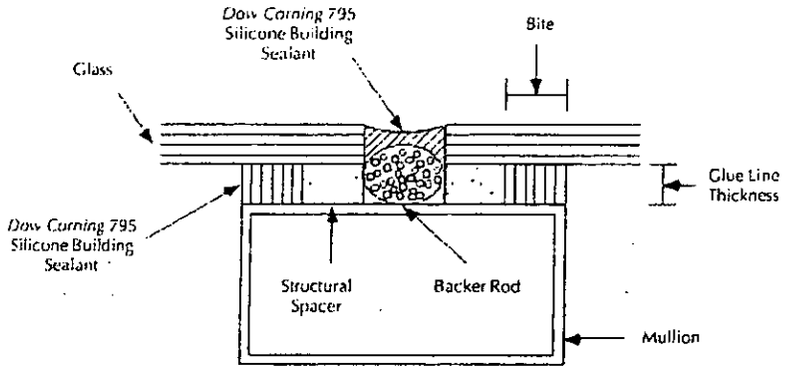

greater than or equal to the smallest leg of the largest lite (in feet) x windload (psf) ÷ 480

- The structural sealant joint must be able to be filled using standard caulking practices
- The structural joint must not move during cure

The above design parameters are general industry guidelines for silicone structural glazing. Project specific recommendation will be made following the review of drawings by Dow Corning Corporation Technical Service and Development.

Properly designed weatherseal joints will accommodate more movement in a 2 to 1 width to depth configuration (Figure 1). The sealant should be no thicker than ⅜" (9 mm) and no thinner than ⅛" (3 mm) for joints where full movement is expected. Joints above 1 in (25 mm) may require sealant depth up to a maximum of ½" (13 mm).

Open cell polyurethane, closed cell polyethylene and non-gassing polyolefin backer rods are all acceptable for use. Certain applications, i.e., EIFS and double weatherseal joints, may require a specific backer rod type. When the joint cavity is shallow, use a polyethylene bondbreaker tape to prevent three-sided adhesion. These backer materials allow sealant to be applied and tooled properly in the joint and after cure, stretch freely within the joint.

The width of building expansion joints varies because of seasonal and daily changes in temperature. If the sealant cannot be installed when the design width is approximately half way between the dimensional extremes, the designed joint must be at least twice the total anticipated joint movement. Good architectural practice calls for joint design of four times the anticipated movement due to construction tolerances and material variations.

Glazing rabbets and joints should be designed to allow installation and retention of the bond breaking backer material during the installation and curing of the silicone sealant.

Lap shear joints should have a bead width that is equal to or greater than the anticipated movement.

Joint Dimension: Small curtainwall panels and lites should allow a minimum width of ¼" (6 mm) for the sealant bead. Larger panels, in which a great deal of movement is expected, should allow a minimum width of ½" (13 mm) for the sealant bead. Joints should always be sized to allow *Dow Corning* 795 Silicone Building Sealant to perform within its movement capability of ±50 percent of original joint dimension.

Glazing of plastic lites, and panels fabricated from plastic, require larger than usual joint dimension due to the plastic's high coefficient of thermal expansion.

In all cases, a minimum of ¼" (6 mm) of sealant contact with each substrate is required to ensure adhesion in a moving joint.

Preparatory Work: Clean all joints and glazing pockets, removing all foreign matter and contaminants, such as grease, oil, dust, water, frost, surface dirt, old sealants and glazing compounds, and protective coatings.

Porous substrates should be cleaned where necessary by grinding, saw cutting, blast cleaning (sand or water) or mechanical abrading, or a combination of these methods as required to provide a sound, clean, dry surface for sealant application. Dust, loose particles, etc., should be blown out of joints with oil-free compressed air or vacuum cleaning.

Metal, glass and plastic substrates should be cleaned by mechanical or solvent procedures. Detergent or soap and water treatments are not acceptable. In all cases where used, solvents should be wiped on and off with clean, oil- and lint-free cloths.[1]

Refer to the *Dow Corning Structural Glazing Manual* and *Dow Corning Weatherproofing Sealant Guide* for additional surface preparations guidelines.

Priming: Laboratory adhesion testing is required to determine priming requirements for all structural glazing applications. Consult the *Dow Corning Structural Glazing Manual* for further details on proper priming procedures.

The *Dow Corning Weatherproofing Sealant Guide* includes general priming guidelines for weatherseal applications. Prior to general job use, field adhesion tests should be performed to verify sealant adhesion to each substrate. Field adhesion test procedures and quality assurance guidelines are outlined in the aforementioned guide.

Masking: Areas adjacent to joints may be masked to ensure neat sealant lines. Do not allow masking tape to touch clean surfaces on which the sealant is to adhere. Tooling should be completed in one continuous stroke

[1]Follow solvent manufacturer's recommended safe handling instructions and applicable federal, state and local regulations.

immediately after sealant application and before a skin forms. Masking should be removed immediately after tooling.

It is imperative that uncured silicone sealants do not come in contact with non-abradable surfaces such as polished granites, metal or glass. Because excess silicone sealant cannot be completely removed with organic or chlorinated solvents, these surfaces must be masked or extreme care must be taken to prevent any silicone sealant from contacting them during application. Once any uncured silicone sealant is allowed to contact the surface, it will be difficult to completely remove.

In cases where uncured sealant is inadvertently applied to adjacent surfaces, the sealant should be cleaned while still uncured, using a commercial solvent such as xylene, toluene, or methyl ethyl ketone (MEK).[1]

Method of Application: Install backer material or joint filler, setting blocks, spacer shims and tapes as specified. Apply sealant in a continuous operation, using a positive pressure adequate to properly fill and seal the joint. Tool or strike the sealant with light pressure to spread the material against the backer material and the joint surfaces. A tool with a concave profile is recommended to keep the sealant within the joint. Do not use liquid tooling aids such as water, soap or solvents.

Tool the sealant applied at sills so that precipitation and cleaning solutions will not pool.

Table I: Estimating Requirements

Linear Feet per Gallon of *Dow Corning* 795 Silicone Building Sealant for Various Joint Sizes									
		Width, Inches							
Depth, Inches		1/4	3/8	1/2	5/8	3/4	1	2	3
	1/8	616	411	307	—	—	—	—	—
	3/16	411	275	205	164	—	—	—	—
	1/4	307	205	154	123	103	—	—	—
	3/8	—	137	103	82	68	51	25	17
	1/2	—	—	77	62	51	39	19	12

Dow Corning 795 Silicone Building Sealant can be applied at outdoor temperatures as low as -23°C (-10°F), provided that surfaces are clean, dry and frost-free.

Do not apply *Dow Corning* 795 Silicone Building Sealant when surface temperatures are in excess of 50°C (122°F).

Safe Handling Information: PRODUCT SAFETY INFORMATION REQUIRED FOR SAFE USE IS NOT INCLUDED. BEFORE HANDLING, READ PRODUCT AND MATERIAL SAFETY DATA SHEETS AND CONTAINER LABELS FOR SAFE USE, PHYSICAL AND HEALTH HAZARD INFORMATION. THE MATERIAL SAFETY DATA SHEET IS AVAILABLE FROM YOUR DOW CORNING REPRESENTATIVE, OR DISTRIBUTOR, OR BY WRITING TO DOW CORNING CUSTOMER SERVICE, OR BY CALLING 1-800-322-8723.

Storage and Shelf Life: When stored at or below 27°C (80°F), *Dow Corning* 795 Silicone Building Sealant has a shelf life of 12 months from date of manufacture. Refer to product packaging for "Use By" date.

6. AVAILABILITY AND COST

Availability: *Dow Corning* 795 Silicone Building Sealant is marketed through the United States and Americas through authorized distributors. For the location of the distributor nearest you, contact Dow Corning Customer Service at 1-800-322-8723.

Cost: Pricing information can be obtained by contacting your local Dow Corning distributor.

7. WARRANTY

Limited Weatherseal Warranty: Dow Corning Corporation produces and sells a full line of silicone construction sealants and adhesives.

These products offer a variety of physical characteristics and adhesion properties. *Dow Corning* 795 Silicone Building Sealant is part of that line and, when used with compatible substrates and when applied within the stated shelf life and according to manufacturer's recommendations for application and joint design, Dow Corning warrants that it will perform as a watertight weatherseal for a period of 20 years from the date of purchase. In addition to maintaining the integrity of the weatherseal, the sealant will not change color when used with backup materials and substrates that have been approved for compatibility by Dow Corning, either after specific testing or noted in a current Dow Corning publication.

Limitations: This warranty specifically excludes failure of the sealant due to:

- Natural causes such as lightning, earthquake, hurricane, tornado, fire, flooding, etc., or
- Movement of the structure resulting in stresses on the sealant that exceed Dow Corning's published specifications for elongation and/or compression for the sealant, whether due to structural settlement, design error or construction error, or
- Disintegration of the underlying substrates, or
- Mechanical damage to the sealant caused by individuals, tools or other outside agents, or
- Changes in the appearance of the sealant from the accumulation of dirt or other contaminants deposited on the sealant from the atmosphere

Remedies: In the event of a claim under this warranty, you must notify Dow Corning Corporation in writing within 30 days of the occurrence of the failure. Dow Corning's sole liability shall be to furnish sufficient silicone replacement material to restore the integrity of the weatherseal. Any labor or other cost associated with the repairs are the responsibility of the owner. DOW CORNING SHALL NOT BE LIABLE FOR AND EXPRESSLY DISCLAIMS ANY LIABILITY FOR DAMAGE TO THE CONTENTS OF THE STRUCTURE OR FOR CONSEQUENTIAL OR INCIDENTAL DAMAGE, WHETHER IN CONTRACT OR IN TORT, INCLUDING NEGLIGENCE.

THIS WARRANTY IS IN LIEU OF ALL OTHER WRITTEN OR ORAL, EXPRESS OR IMPLIED WARRANTIES AND DOW CORNING SPECIFICALLY DISCLAIMS ANY IMPLIED WARRANTY OF MERCHANTABILITY OR FITNESS FOR PURPOSE.

Structural Adhesion Warranty: *Dow Corning* 795 Silicone Building Sealant may be used as a structural adhesive under certain conditions, but Dow Corning Corporation disclaims any general adhesion warranty. Dow Corning will issue project-specific Structural Adhesion Warranties on a case-by-case basis. No Structural Adhesion Warranty will be issued until Dow Corning has reviewed the pertinent building prints and specifications and has completed adhesion and compatibility testing of the various materials to be used with *Dow Corning* 795 Silicone Building Sealant. For details on how to obtain the Structural Warranty, please contact your Dow Corning field representative.

8. MAINTENANCE

Generally, no maintenance is required. If the sealant becomes damaged, replace the damaged portion. *Dow Corning* 795 Silicone Building Sealant will adhere to cured silicone sealant with only a preparatory solvent wipe to remove accumulated dirt. Dirty sealant may be cleaned with a solvent wipe or soap and water.

9. TECHNICAL SERVICE

Complete technical information and literature are available from Dow Corning and authorized building sealant distributors. Laboratory testing and technical service are available from Dow Corning. See the last page for a list of Dow Corning U.S. Construction Testing Laboratories.

10. FILING SYSTEM

- Sweets Catalog 07920/DOW BuyLine 2882
- Architectural specifications and complete technical literature are available from Dow Corning upon request.

Additional information is available via the Dow Corning web site at www.dowcorning.com.

DOW CORNING NORTH AMERICA FIELD SALES OFFICES:

ATLANTA
1225 Northmeadow Parkway, Suite
104
Roswell, GA 30076
(770) 751-7979

CHICAGO
1120 West Lake-Cook Road, Suite1120C
Buffalo Grove, IL 60089
(847) 541-3430

DETROIT
47799 Halyard Drive, Suite 77
Plymouth, MI 48170
(734) 454-2000

GREENSBORO
2914B Patterson Street
Greensboro, NC 27407
(336) 547-7272

LOS ANGELES
5 Corporate Park
Suite 280
Irvine, CA 92714
(949) 757-5000

NEW YORK CITY – METRO
500 International Drive, Suite 350
Mount Olive, NJ 07828
(973) 691-1414

SAN FRANCISCO
PO Box 5121
910 Auburn Court
Fremont, CA 94537-5121
(510) 490-9302

MIDLAND – CORPORATE
HEADQUARTERS
Midland, MI 48686-0994
(517) 496-6000

CANADA
Dow Corning Canada, Inc.
6747 Campobello Road
Mississauga, Ontario L5N 2M1
(905) 826-9600

MEXICO
Dow Corning de Mexico S.A. de C.V.
Campos Eliseos 345-5 Piso
Col. Polanco
Delegacion Miguel Hidalgo
C.P. 11550 Mexico, D.F.
525 327 1300

DOW CORNING U.S. CONSTRUCTION TESTING LABORATORIES:

ATLANTA
Dow Corning Corporation
1225 Northmeadow Parkway, Suite
104
Roswell, GA 30076
(770) 751-7979

MIDLAND
Dow Corning Corporation Test Lab
2200 West Salzburg Road
Auburn, MI 48611
(517) 496-6000

SAN FRANCISCO
Dow Corning Corporation
PO Box 5121
910 Auburn Court
Fremont, CA 94537-5121
(510) 490-9302

CUSTOMER SERVICE AND ORDER ENTRY INFORMATION:

CORPORATE HEADQUARTERS
Dow Corning Corporation
Midland, MI 48686-0994
(517) 496-6000

The information and data contained herein are based on information we believe reliable. You should thoroughly test any application and independently conclude satisfactory performance before commercialization. Suggestions of uses should not be taken as inducements to infringe any particular patent.

Dow Corning is a registered trademark of Dow Corning Corporation.

©1991, 1999 Dow Corning Corporation. All rights reserved.

Printed in USA [illegible] Form No. 61-885E-99

DOW CORNING

Dow Corning Corporation
Midland, Michigan 48686-0994

DOW CORNING

DOW CORNING CORPORATION
Material Safety Data Sheet

Version: 4.0
Revision Date: 2006/08/28

DOW CORNING(R) 795 SILICONE BUILDING SEALANT, CHARCOAL

1. IDENTIFICATION OF THE SUBSTANCE AND OF THE COMPANY

Dow Corning Corporation
South Saginaw Road
Midland, Michigan 48686

24 Hour Emergency Telephone: (989) 496-5900
Customer Service: (989) 496-6000
Product Disposal Information: (989) 496-6315
CHEMTREC: (800) 424-9300

MSDS No.: 03104486 Revision Date: 2006/08/28

Generic Description: Silicone elastomer
Physical Form: Paste
Color: Charcoal gray
Odor: Alcoholic odor

NFPA Profile: Health 1 Flammability 1 Instability/Reactivity 0

Note: NFPA = National Fire Protection Association

2. HAZARDS IDENTIFICATION

POTENTIAL HEALTH EFFECTS

Acute Effects

Eye: Direct contact may cause mild irritation.

Skin: No significant irritation expected from a single short-term exposure.

Inhalation: Vapor overexposure may cause drowsiness.

Oral: Low ingestion hazard in normal use.

Prolonged/Repeated Exposure Effects

Skin: Repeated or prolonged exposure may cause irritation.

Inhalation: Prolonged or repeated exposure by inhalation may injure internally.

Oral: Repeated ingestion or swallowing large amounts may injure internally.

Signs and Symptoms of Overexposure

No known applicable information.

Medical Conditions Aggravated by Exposure

No known applicable information.

The above listed potential effects of overexposure are based on actual data, results of studies performed upon similar compositions,

component data and/or expert review of the product. Please refer to Section 11 for the detailed toxicology information.

3. COMPOSITION/INFORMATION ON INGREDIENTS

CAS Number	Wt %	Component Name
1185-55-3	1.0 - 5.0	Methyltrimethoxysilane

The above components are hazardous as defined in 29 CFR 1910.1200.

4. FIRST AID MEASURES

Eye:	Immediately flush with water for 15 minutes.
Skin:	No first aid should be needed.
Inhalation:	Remove to fresh air. Get medical attention if ill effects persist.
Oral:	Get medical attention.
Notes to Physician:	Treat according to person's condition and specifics of exposure.

5. FIRE FIGHTING MEASURES

Flash Point:	Not applicable.
Autoignition Temperature:	Not determined.
Flammability Limits in Air:	Not determined.
Extinguishing Media:	On large fires use dry chemical, foam or water spray. On small fires use carbon dioxide (CO2), dry chemical or water spray. Water can be used to cool fire exposed containers.
Fire Fighting Measures:	Self-contained breathing apparatus and protective clothing should be worn in fighting large fires involving chemicals. Determine the need to evacuate or isolate the area according to your local emergency plan. Use water spray to keep fire exposed containers cool.
Unusual Fire Hazards:	None.

6. ACCIDENTAL RELEASE MEASURES

Containment/Clean up:	Observe all personal protection equipment recommendations described in Sections 5 and 8. Wipe up or scrape up and contain for salvage or disposal. Clean area as appropriate since spilled materials, even in small quantities, may present a slip hazard. Final cleaning may require use of steam, solvents or detergents. Dispose of saturated absorbant or cleaning materials appropriately, since spontaneous heating may occur. Local, state and federal laws and regulations may apply to releases and disposal of this material, as well as those materials and items employed in the cleanup of releases. You will need to determine which federal, state and local laws and regulations are applicable. Sections 13 and 15 of this MSDS provide information regarding certain federal and state requirements.

Note: See section 8 for Personal Protective Equipment for Spills. Call (989) 496-5900, if additional information is required.

7. HANDLING AND STORAGE

Use with adequate ventilation. Traces of benzene (carcinogen) may form if heated in air above 300 F (149 C). Provide ventilation to control vapor exposure within inhalation guidelines when handling at elevated temperatures. Review the OSHA benzene regulation for detailed information on safe handling requirements. Product evolves flammable methyl alcohol when exposed to water or humid air. Provide ventilation during use to control exposure within Section 8 guidelines or use air-supplied or self-contained breathing apparatus. Avoid eye contact. Avoid breathing vapor. Keep container closed. Do not take internally.

Use reasonable care and store away from oxidizing materials. Keep container closed and store away from water or moisture.

8. EXPOSURE CONTROLS / PERSONAL PROTECTION

Component Exposure Limits

CAS Number	Component Name	Exposure Limits
1185-55-3	Methyltrimethoxysilane	Dow Corning guide: TWA 50 ppm. Also see methyl alcohol comments.

Methyl alcohol forms on contact with water or humid air. Provide adequate ventilation to control exposures within guidelines of OSHA PEL: TWA 200 ppm and ACGIH TLV-skin: TWA 200 ppm, STEL 250 ppm.

Engineering Controls

Local Ventilation:	Recommended.
General Ventilation:	Recommended.

Personal Protective Equipment for Routine Handling

Eyes:	Use proper protection - safety glasses as a minimum.

Skin:	Washing at mealtime and end of shift is adequate.
Suitable Gloves:	No special protection needed.
Inhalation:	Use respiratory protection unless adequate local exhaust ventilation is provided or exposure assessment demonstrates that exposures are within recommended exposure guidelines. IH personnel can assist in judging the adequacy of existing engineering controls.
Suitable Respirator:	General and local exhaust ventilation is recommended to maintain vapor exposures below recommended limits. Where concentrations are above recommended limits or are unknown, appropriate respiratory protection should be worn. Follow OSHA respirator regulations (29 CFR 1910.134) and use NIOSH/MSHA approved respirators.

Personal Protective Equipment for Spills

Eyes:	Use full face respirator.
Skin:	Washing at mealtime and end of shift is adequate.
Inhalation/Suitable Respirator:	Respiratory protection recommended. Follow OSHA Respirator Regulations (29 CFR 1910.134) and use NIOSH/MHSA approved respirators. Protection provided by air purifying respirators against exposure to any hazardous chemical is limited. Use a positive pressure air supplied respirator if there is any potential for uncontrolled release, exposure levels are unknown, or any other circumstance where air purifying respirators may not provide adequate protection.
Precautionary Measures:	Avoid eye contact. Avoid breathing vapor. Keep container closed. Do not take internally. Use reasonable care.
Comments:	Traces of benzene (carcinogen) may form if heated in air above 300 F (149 C). Provide ventilation to control vapor exposure within inhalation guidelines when handling at elevated temperatures. Review the OSHA benzene regulation for detailed information on safe handling requirements. Product evolves flammable methyl alcohol when exposed to water or humid air. Provide ventilation during use to control exposure within Section 8 guidelines or use air-supplied or self-contained breathing apparatus.

Note: These precautions are for room temperature handling. Use at elevated temperature or aerosol/spray applications may require added precautions.

9. PHYSICAL AND CHEMICAL PROPERTIES

Physical Form:	Paste
Color:	Charcoal gray
Odor:	Alcoholic odor
Specific Gravity @ 25°C:	1.53
Viscosity:	Not determined.
Freezing/Melting Point:	Not determined.
Boiling Point:	Not determined.

Vapor Pressure @ 25°C:	Not determined.
Vapor Density:	Not determined.
Solubility in Water:	Not determined.
pH:	Not determined.
Volatile Content:	Not determined.
Flash Point:	Not applicable.
Autoignition Temperature:	Not determined.
Flammability Limits in Air:	Not determined.

Note: The above information is not intended for use in preparing product specifications. Contact Dow Corning before writing specifications.

10. STABILITY AND REACTIVITY

Chemical Stability:	Stable.
Hazardous Polymerization:	Hazardous polymerization will not occur.
Conditions to Avoid:	None.
Materials to Avoid:	Oxidizing material can cause a reaction. Water, moisture, or humid air can cause hazardous vapors to form as described in Section 8.

Hazardous Decomposition Products

Thermal breakdown of this product during fire or very high heat conditions may evolve the following decomposition products: Metal oxides. Carbon oxides and traces of incompletely burned carbon compounds. Formaldehyde. Nitrogen oxides. Chlorine compounds. Silicon dioxide. Quartz.

11. TOXICOLOGICAL INFORMATION

Component Toxicology Information

This material contains methyltrimethoxysilane (MTMS). MTMS was evaluated in a combined repeated-dose toxicity study that included screening tests for reproductive and developmental toxicity (OECD 422). Sprague-Dawley rats were treated (oral route, corn oil as carrier) daily at dose levels of 0, 50, 250, and 1000 mg MTMS/kg body weight. Test article effects on organ weight were limited to increased liver weight for both males and females in the top two dose levels. Histomorphological findings included increased hepatocellular hypertrophy (both sexes) and increased periportal vacuolation (females only) in the top two dose levels. Thymus weight was decreased in males in the top two dose groups. The thymus appeared normal histomorphologically. Other test article related histomorphological changes included increased incidence of thyroid follicular cell hyperplasia/hypertrophy and severity in males and females in the top two dose levels. There was also an increased incidence of hyperplasia/hypertrophy, apoptosis, and lymphocytic infiltration in the zona reticularis of the adrenal glands in high-dose females and acanthocytosis in high-dose males and females. Clinical pathology evaluations demonstrated a marked prolongation in prothrombin time for males in the top two dose levels. Marked elevation in blood platelet count was observed in both males and females at the high dose. Serum total protein was elevated in high-dose males and in females from the top two dose levels. Serum total cholesterol was elevated in females from the top two dose levels. There were no test article related effects on any of the reproductive and

developmental endpoints. Because this study is considered to be a screening of repeated-dose and reproductive/developmental toxicity, the results do not provide sufficient information needed to interpret potential relevance to human health and are not indicative of a specific toxicity. This type of study is commonly used as a screening study to determine whether further testing should be conducted. Also, this study was conducted via the oral route of exposure, which is not a typical route of exposure for either manufacturing or end use applications of MTMS. A longer-term study by a more relevant route of exposure (inhalation) is being conducted to understand these preliminary findings.

A 14-day whole-body inhalation toxicity study of methyltrimethoxysilane (MTMS) in Sprague-Dawley rats (5 males / 5 females per group) was conducted in preparation of dose level selection for a 90-day repeated dose toxicity study. Sprague-Dawley rats were treated six hours per day for 14 consecutive days to exposure levels of 0 (control), 400, 800, 4000 and 8000 ppm MTMS. Signs of excessive urine staining and bloody urine were present following the first or second day of exposure in animals from 4000 and 8000 ppm exposure groups. All animals from the 8000 ppm exposure group and three animals from the 4000 ppm group were euthanized prior to scheduled terminal sacrifice. The primary gross pathology findings in these animals consisted of urinary bladder and kidney effects. Urinary bladder findings included dilation, calculi, abnormal contents and color. Kidney findings included mild to moderate dilation. Additional findings in females from the 4000 ppm exposure group included enlarged adrenal glands, small thymus and a mild gaseous intestinal tract. The relevance of these findings to human health is unknown. Additional testing (90-day repeated dose) is being conducted to better understand these findings.

Special Hazard Information on Components

No known applicable information.

12. ECOLOGICAL INFORMATION

Environmental Fate and Distribution

Complete information is not yet available.

Environmental Effects

Complete information is not yet available.

Fate and Effects in Waste Water Treatment Plants

Complete information is not yet available.

Ecotoxicity Classification Criteria

Hazard Parameters (LC50 or EC50)	High	Medium	Low
Acute Aquatic Toxicity (mg/L)	<=1	>1 and <=100	>100
Acute Terrestrial Toxicity	<=100	>100 and <= 2000	>2000

This table is adapted from "Environmental Toxicology and Risk Assessment", ASTM STP 1179, p.34, 1993.

This table can be used to classify the ecotoxicity of this product when ecotoxicity data is listed above. Please read the other information presented in the section concerning the overall ecological safety of this material.

DOW CORNING(R) 795 SILICONE BUILDING SEALANT, CHARCOAL

13. DISPOSAL CONSIDERATIONS

RCRA Hazard Class (40 CFR 261)

When a decision is made to discard this material, as received, is it classified as a hazardous waste? No

State or local laws may impose additional regulatory requirements regarding disposal.Call (989) 496-6315, if additional information is required.

14. TRANSPORT INFORMATION

DOT Road Shipment Information (49 CFR 172.101)

Not subject to DOT.

Ocean Shipment (IMDG)

Not subject to IMDG code.

Air Shipment (IATA)

Not subject to IATA regulations.

Call Dow Corning Transportation, (989) 496-8577, if additional information is required.

15. REGULATORY INFORMATION

Contents of this MSDS comply with the OSHA Hazard Communication Standard 29 CFR 1910.1200.

TSCA Status: All chemical substances in this material are included on or exempted from listing on the TSCA Inventory of Chemical Substances.

EPA SARA Title III Chemical Listings

Section 302 Extremely Hazardous Substances (40 CFR 355):
None.

Section 304 CERCLA Hazardous Substances (40 CFR 302):
None.

Section 311/312 Hazard Class (40 CFR 370):

Acute:	Yes
Chronic:	Yes
Fire:	No
Pressure:	No
Reactive:	No

Section 313 Toxic Chemicals (40 CFR 372):
None present or none present in regulated quantities.

Note: Chemicals are listed under the 313 Toxic Chemicals section only if they meet or exceed a reporting threshold.

Supplemental State Compliance Information

California

Warning: This product contains the following chemical(s) listed by the State of California under the Safe Drinking Water and Toxic Enforcement Act of 1986 (Proposition 65) as being known to cause cancer, birth defects or other reproductive harm.

None known.

Massachusetts

CAS Number	Wt %	Component Name
471-34-1	40.0 - 70.0	Calcium carbonate
546-93-0	1.0 - 5.0	Magnesium carbonate

New Jersey

CAS Number	Wt %	Component Name
471-34-1	40.0 - 70.0	Calcium carbonate
70131-67-8	30.0 - 60.0	Dimethyl siloxane, hydroxy-terminated
63148-62-9	10.0 - 30.0	Polydimethylsiloxane
112945-52-5	3.0 - 7.0	Amorphous fumed silica
1185-55-3	1.0 - 5.0	Methyltrimethoxysilane
14808-60-7	<=0.8	Quartz
1333-86-4	<1.0	Carbon black

Pennsylvania

CAS Number	Wt %	Component Name

471-34-1	40.0 - 70.0	Calcium carbonate
70131-67-8	30.0 - 60.0	Dimethyl siloxane, hydroxy-terminated
63148-62-9	10.0 - 30.0	Polydimethylsiloxane
112945-52-5	3.0 - 7.0	Amorphous fumed silica

16. OTHER INFORMATION

Prepared by: Dow Corning Corporation

These data are offered in good faith as typical values and not as product specifications. No warranty, either expressed or implied, is hereby made. The recommended industrial hygiene and safe handling procedures are believed to be generally applicable. However, each user should review these recommendations in the specific context of the intended use and determine whether they are appropriate.

(R) indicates Registered Trademark

Materials Engineering Unit

241 Erie Street, Room 234
Jersey City, NJ 07310
Tel: 201-216-2952 **Fax:** 201-216-2949

THE PORT AUTHORITY OF NY & NJ

TRANSMITTAL
No. 00035

PROJECT: WO12 South Wing Emerg. Stair Repairs

DATE: 9/17/2009

TO: VRH Construction Corp.
c/o Port Authority of NY & NJ
625 Eight Ave. 2nd Flr. North Bldg
New York, NY 10018

CONTRACT: PABT-200.200 WO12

ATTN: **Anthony Carnabuci**

		STATUS LEGEND:
☐ Shop Drawings	Approved (APP)	New Item (NEW)
☑ Letter	Approved as Corrected (AAC)	Not Approved (NA)
☐ Prints	Approved as Noted (AAN)	Not Reviewed (NR)
☐ Change Order	For Record Only (FRO)	Review With Comments (RWC)
☐ Plans	For Your Information (FYI)	Review With No Comments (RWNC).
☐ Samples	Incomplete (INC)	Superseded (SUPS)
☐ Specifications		
☑ Other: Made from Submittal	☐ Attached ☐ Separate Cover Via: Mail	
	Review and Comment	

SUBMITTAL	REV.	DATE	DESCRIPTION	Remark	STATUS
09910-0007	R001	9/15/2009	Desc: Quality Assurance & Quality Control	#1	AAC

Remarks: 1. Measurement of dry film thickness shall be in accordance with SSPC PA2.

Approvals shall not relieve the Contractor of any responsibility as required by the Contract or waive any further authority of the Engineer or modify or waive any provision of the subject Contract with regard to this material(s) or its approval.

Material(s), which do not conform to the contract documents, will be subject to rejection at the job site by the Resident Engineer.

If you have any questions, please call John Bullard of my staff at (201) 216-2993. Our fax number is (201) 216-2949.

CC: P. Salvatore w/att., A. Kaprielian w/att., J. Bullard, MF

Signed:
Casimir Bognacki, P.E.
Chief of Materials Engineering

Expedition ®

LETTER OF TRANSMITTAL

JB

Action Key

1 For your records and/or use
2 For price quotation
3 For approval
4 Approved/Reviewed
5 Approved as noted: Re-submission not required
6 Approved as noted: Revise and re-submit
7 Rejected: Re-submit per contract documents

VRH
CONSTRUCTION CORP.
General Contractors & Construction Managers

To	The Port Authority of NY & NJ	Transmittal No.	00040
	Two Gateway Center	Job No.	2030WO12
	15th Floor	Project	PANY/NJ-bt-200.200 WO 12
	Newark, NJ 07102		South Wing Emergency Stair Repairs
Attention	Ka Kei Chan		
Phone No.	973-792-4629 Fax 973-792-4602		

We are sending you herewith the followir ☐ Drawings ☒ Shop Drawings ☐ Samples ☐ Specifications ☒ Other:

Via: ☒ Attached ☐ Separate Cover Via Mail

Quantity	Drawing/Submittal No.	Description	Action
9	09910-007	Dwg: Title: Quality Assurance & Quality Control Desc: Quality Assurance & Quality Control	3

RECEIVED SEP - 8 2009

Remarks:

cc: P. Salvatore; A. Kaprielian/PANYNJ

Signed Anthony Carnabuci for

By Anthony J. Carnabuci

Date 9/3/2009

625 Eighth Avenue
2nd Flr, North Building
New York, NY 10018

Phone
212-629-6187
Fax
212-629-9243

LETTER OF TRANSMITTAL

VB

Action Key

1 For your records and/or use
2 For price quotation
3 For approval
4 Approved/Reviewed
5 Approved as noted: Re-submission not required
6 Approved as noted: Revise and re-submit
7 Rejected: Re-submit per contract documents

VRH
CONSTRUCTION CORP.
General Contractors & Construction Managers

To	The Port Authority of NY & NJ	Transmittal No.	00040
	Two Gateway Center	Job No.	2030WO12
	15th Floor	Project	PANY/NJ-bt-200.200 WO 12
	Newark, NJ 07102		South Wing Emergency Stair Repairs
Attention	Ka Kei Chan		
Phone No.	973-792-4629 Fax 973-792-4602		

We are sending you herewith the followir ☒ Drawings ☒ Shop Drawings ☐ Samples ☐ Specifications ☒ Other:

Via: ☒ Attached ☐ Separate Cover Via Mail

Quantity	Drawing/Submittal No.	Description	Action
9	09910-007 Rev. 1	Dwg: Title: Quality Assurance & Quality Control Desc: Quality Assurance & Quality Control	3

9/8/09

Remarks:	
cc:	P. Salvatore; A. Kaprielian/PANYNJ
Signed	Anthony Carnabuci
By	Anthony J. Carnabuci
Date	9/3/2009

625 Eighth Avenue
2nd Flr, North Building
New York, NY 10018

Phone
212-629-6187
Fax
212-629-9243

VRH Construction Corp.
625 Eighth Avenue
2nd Flr, North Building
New York, NY 10018
Phone: 212-629-6187
Fax: 212-629-9243

SUBMITTAL
NO. 09910-007
PACKAGE NO: 09910

TITLE: Quality Assurance & Quality Control
PROJECT: PANY/NJ-bt-200.200 WO 12
DRAWING:
STATUS: 3
BIC: PANYNJ

REQUIRED START: 8/7/2009
REQUIRED FINISH: 8/21/2009
DAYS HELD: 0
DAYS ELAPSED: 27
DAYS OVERDUE: 13

RECEIVED FROM		SENT TO		RETURNED BY		FORWARDED TO	
FINE	GS	PANYNJ	KC	PANYNJ	KC	FINE	GS

Revision No.	Description/Remarks	Received	Sent	Returned	Forwarded	Status	Sepia	Prints	Drawing Date	Held	Elapsed
000	Quality Assurance & Quality Control Plan	8/7/2009	8/7/2009			3	0	8		27	27
001	Quality Assurance & Quality Contnrol Plan			8/31/2009	8/31/2009	7	0	0		0	0
002	Quality Assurance & Quality Control	9/3/2009	9/3/2009			3	0	9		0	0

QUALITY ASSURANCE
and
QUALITY CONTROL PLAN

Fine Painting
1160 RT 22
MOUNTAINSIDE NJ 07092

Prepared for

South Wing Emergency Repairs
BT 200.200 – WO # 12

09910-007
200.200 W.O. 12

SECTION 1.0 GENERAL

The Quality Control/Quality Assurance (QA/QC) Plan describes the process to be Utilized by Fine Painting in the surface preparation and painting of the 6 stairs at the Port Authority Bus Terminal Facility.

All work shall be done in accordance with PANYNJ Specification Section 09910 "Painting" The QA/QC Plan is prepared in accordance with Appendix "A".

SECTION 2.0 REFERENCES

Reference documents, as they pertain to this project, are as follows:

SSPC- Structural Steel Painting Council:

- SSPC-SP Surface Preparation Specification:
  - ✓ SSPC -SP1 – Solvent cleaning
  - ✓ SSPC -SP2 – Hand tool Cleaning
  - ✓ SSPC – SP3 – Power tool Cleaning
  - ✓ SSPC – SP11-Power tool cleaning
- ASTM D 1186
- ASTM D 3359
- ASTM D 4414

SECCTION 3.0 INSPECTION PROCEDURES

3.1 GENERAL

Following is an outline of typical inspection procedures to be followed at this project:

1. Pre-job meeting: The Quality Control Officer should attend the pre-job meeting. At the meeting any ambiguities in the specifications should be discussed.

2. Specifications and Submittal: A copy of the specifications should be maintained at the job site. The QCO and the Site Supervisor shall be very familiar with all QC issues and requirements of the specifications.

   Before using any paint system, submittals shall be approved by PANYNJ and the Submittals should be physically in the hands of the field personnel.

3. Product Data Sheet and MSDS: Product data sheets and Material Safety Data Sheets of all approved paints should be on site, read and compared with specifications.

4. Ambient Conditions: Ambient conditions such as ambient temperature and surface temperature shall be monitored daily to ensure that meet the requirement of the specific product being applied.

5. Wet/ Dry Film Thickness: Wet Film Thickness (WFT) Dry Film thickness (DFT) shall be measured and record in the respective forms to ensure that meets the requirement of the specific product being applied.

6. Mixing: Only labeled, sealed containers are to be used. Unlabeled containers shall not be brought to the site.

7. Spec. Section 09910, Part 1.04 C.2, Items A, B, & F will not apply to our application. We are not shop painting the steel, our application will be applied in the field.

3.2 THE DAILY INSPECTION REPORT

The completion and accurate recording of the information collected to complete the Daily Inspection From is essential to the production of a high Quality performance. The Daily inspection form should be completed every day except during seasonal shut down

The Daily Inspection Report shall be completed in the following manner:

Record the following Information:

Your Name, The Owners Representative Name, Client Name, Facility Name, Date, Location, Your Start Time, Your Stop Time, These are self explanatory.

Weather- record clear, cloudy, rain, snow, partly sunny.

Surface Preparation- Specified and Actual- record what surface prep method was specified and the actual surface prep.

Coating Type- record Prime coat, Intermediate Coat, Splash coat or Top Coat.

Lot and batch Numbers- record lot and batch Numbers located on the cans of paint being used.

Application times- record the time application started and stooped for each coat.

Surface Preparation and Quality Item- These items are self explanatory and will be covered in the QC initial training.

Note- record any unusual events or occurrences that could effect the coating or on the site in general.

Specific Deficiencies, Comments, And Special Instructions- Record these events on the space allotted on the Inspection Report.

3.3 LIST OF QUALITY CONTROL EQUIPMENT

Following is the list of quality control equipment that shall be used for this project.

1. WET FILM THICKNESS GAUGE

2. WFT for each coating shall be submitted to PANYNJ as part of the daily QC Report. The submittal and the Product data sheet shall be physically in the hands of the field personnel.

3. DRY FILM THICKNESS GAUGE
   Measurement from the Dry paint Thickness with Magnetic Gauges shall be recorded on the daily QC Report. The Elcometer 211 will be used for this application, cut sheets are attached.

4. SSPC VIS 3
   A series of 43 full-color reference photographs to be used as supplement to the SSPC standards for hand and power tool cleaning. Shows a total of seven different steel surfaces (four uncoated and three previously coated) before and after hand tool cleaning (SP 2), power tool cleaning with power wire brushes and sanding discs (SP 3) and, power tool cleaning to bare metal (SP 11). Also contains photos of SP 11 surfaces with a restored profile, a revised guide to the use of reference photographs, a new table of standards and conditions depicted, and additional explanatory notes.

Abrasive Blasting shall **NOT** be performed on this project as it is not in the scope of this contract.
In the future, is abrasive blasting needs to be performed, an amendment shall be provided to include testing requirements as per the specification.

elcometer

Elcometer 211 Coating Thickness Gauge

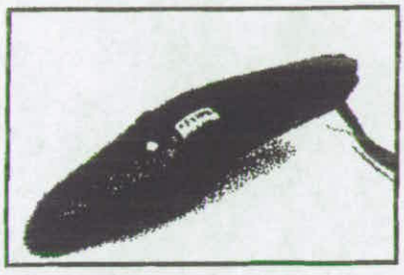

The Elcometer 211, commonly referred to as the "Banana Gauge," has proven to be a successful coating thickness gauge where the use of electronic instruments is difficult, e.g inflammable atmospheres in oil and gas production.

The "v" grooved base, rubber feet and clear scale with its ranges for thicker coatings, make this instrument one of the most popular mechanical gauges in the world.

- Factory calibrated - with user calibration adjustment
- Foils supplied to check calibration on site
- Ideal for very cold surfaces
- Small, portable, with an accuracy ±5%

The Elcometer 211 can also be supplied with a special 3 piece coated standard (traceable to NIST and UKAS) at a special price - contact your Elcometer representative for further information.

www.elcometer.com

test method | specifications | standards | data sheet

elcometer

specifications

Elcometer 211 Coating Thickness Gauge

Accuracy	±5% of the reading or ±2.5µm/ 0.1mils (whichever is the greater)
Minimum Substrate Thickness	0.4mm (16mils)
Minimum Area of Measurement	30mm (1.18") Diameter
Minimum Diameter for Measurement on Bar Material	20mm (0.8")
Edge Effects	Must be at least 6mm (0.24") from edge
Instrument Dimensions	200 x 60 x 30mm (7.8 x 2.4 x 1.2")
Certification Available	Certificate of Conformance and Calibration Certificate

Model	Description	Range		Part Number
		Metric	Imperial	
Elcometer 211/1M	Elcometer 211 Coating Thickness Gauge – Metric Scale 1M	0 - 1000µm	-	A211F--1M
Elcometer 211/1E	Elcometer 211 Coating Thickness Gauge – Imperial Scale 1E	0 - 1000µm	0–40 mils	A211F--1E
Elcometer 211/8M	Elcometer 211 Coating Thickness Gauge – Metric Scale 8M	0.65–6 mm	-	A211F--8M
Elcometer 211/8E	Elcometer 211 Coating Thickness Gauge – Imperial Scale 8E	-	25–250 mils	A211F--8E
The Elcometer 211 can also be supplied with a 3 piece coated standard at a special price – contact your Elcometer representative for further information.				

www.elcometer.com

test method standards data sheet product page

SECTION 4.0 PROCEDURES FOR USING WET FILM THICKNESS GAUGE

Description

The wet film thickness gauge had four sides. The edge of each side has two end points of equal length with progressively shorter legs between them. Numbers on each leg represent the distance (in mils) between the legs and the end points. The gauge permits the applicator to approximate the amount of coating being applied while wet, in order to better assure that a proper dry film thickness will result.

Reference

ASTM D4414 "Standard Practice for Measurement of Wet Film Thickness by Notch Gauges."

Method

1. Place the instrument squarely and firmly onto the surface to be measured immediate after the coating application. Use the gauge along the length, not the width of curved surfaces. Avoid surface irregularities which may distort readings.
2. Remove the gauge from the surface and note the highest step covered by coating.
3. The wet film thickness lies between the highest coated step and the next uncoated step.

Helpful Hints

1. It is important to remember that wet film thicknesses are an approximation of thickness only.
2. Do not drag, twist or slide the gauge in the wet coating.
3. Clean the gauge after each use.

Daily QC Report Form and Checklist

CONTRACTOR: FINE PAINTING DATE:_____

NAME OF PROJECT: **South Wing Emergency Repairs (BT 200.200)**

G C: **V R H**

Time _____Ambient Temp _____ °F Time _____Ambient Temp _____ °F

Time_____ Relative Humidity_____% Time_____ Relative Humidity_____%

Time_____ Dew Point_____ °F Time_____ Dew Point_____ °F

Area of Work _____ _____

Surface Prep _____ _____

Surface Temperature _____ _____

Paint Type _____ _____

Batch Numbers _____ _____

Wet Mil Readings _____ _____

Dry Film Thickness _____ _____

Remarks

_____

_____

_____

_____ _____

OC Officer (Print and sign name) FOREMAN (Print and sign name)

Materials Engineering Unit

241 Erie Street, Room 234
Jersey City, NJ 07310
Tel: 201-216-2952 Fax: 201-216-2949

THE PORT AUTHORITY OF NY & NJ

TRANSMITTAL

No. 00037

PROJECT: WO12 South Wing Emerg. Stair Repairs

DATE: 9/23/2009

TO: VRH Construction Corp.
c/o Port Authority of NY & NJ
625 Eight Ave. 2nd Flr. North Bldg
New York, NY 10018

CONTRACT: PABT-200.200 WO12

ATTN: **Anthony Carnabuci**

	STATUS LEGEND:	
☐ Shop Drawings	Approved (APP)	New Item (NEW)
☑ Letter	Approved as Corrected (AAC)	Not Approved (NA)
☐ Prints	Approved as Noted (AAN)	Not Reviewed (NR)
☐ Change Order	For Record Only (FRO)	Review With Comments (RWC)
☐ Plans	For Your Information (FYI)	Review With No Comments (RWNC)
☐ Samples	Incomplete (INC)	Superseded (SUPS)
☐ Specifications		
☑ Other: Made from Submittal	☐ Attached ☐ Separate Cover Via: Mail	
Review and Comment		

SUBMITTAL	REV.	DATE	DESCRIPTION	Remark	STATUS
07115-0005	R000	9/21/2009	Desc: Product data sheets for Carlisle "CCW-711W" pre-pave sheet membrane waterproofing system and "CCW-AWP" primer/adhesion promoter; Contract Dwg. No. G003 "Asphalt Pavement Restoration Notes No. 3"; Spec. Section 07115	#1,2	AAN

Remarks: 1. This product is an approved equivalent to the Bituthene 5000 system, for asphalt pavement restoration, as delineated in the contract drawing.
2. Product shall be installed according to manufacturers installation instructions.

Approvals shall not relieve the Contractor of any responsibility as required by the Contract or waive any further authority of the Engineer or modify or waive any provision of the subject Contract with regard to this material(s) or its approval.

Material(s), which do not conform to the contract documents, will be subject to rejection at the job site by the Resident Engineer.

If you have any questions, please call Stan Palmaka of my staff at (201) 216-2982. Our fax number is (201) 216-2949.

CC: P. Salvatore w/att. A. Kaprielian w/att., S. Palmaka, MF

SEP 23 2009

Signed:
Casimir Bogdacki, P.E.
Chief of Materials Engineering

Expedition ®

LETTER OF TRANSMITTAL

SP

Action Key

1 For your records and/or use
2 For price quotation
3 For approval
4 Approved/Reviewed
5 Approved as noted: Re-submission not required
6 Approved as noted: Revise and re-submit
7 Rejected: Re-submit per contract documents

VRH
CONSTRUCTION CORP.
General Contractors & Construction Managers

To	The Port Authority of NY & NJ	Transmittal No.	00043
	Two Gateway Center	Job No.	2030WO12
	15th Floor	Project	PANY/NJ-bt-200.200 WO 12
	Newark, NJ 07102		South Wing Emergency Stair Repairs
Attention	Ka Kei Chan		
Phone No.	973-792-4629 Fax 973-792-4602		

We are sending you herewith the followir ☒ Drawings ☒ Shop Drawings ☐ Samples ☐ Specifications ☒ Other:

Via: ☒ Attached ☐ Separate Cover Via Mail

Quantity	Drawing/Submittal No.	Description	Action
9	07115-005	Dwg: Title: CCW-711W & CCW-AWP Waterproofing Desc: CCW-711W & CCW-AWP Waterproofing	3

RECEIVED SEP 14 2009

Remarks:

cc: P. Salvatore; A. Kaprielian/PANYNJ

Signed Anthony Capnabuci JR

By Anthony J. Capnabuci

Date 9/10/2009

625 Eighth Avenue
2nd Flr, North Building
New York, NY 10018

Phone
212-629-6187
Fax
212-629-9243

07115-005
200.200 W.O. 12

CARLISLE
Coatings & Waterproofing

CCW-711W
Pre-Pave Sheet Membrane Waterproofing System

DESCRIPTION
CCW-711W is a 65 mil thick composition consisting of a self adhering rubberized asphalt membrane laminated to a high strength, heat resistant woven polypropylene mesh. A siliconized release liner prevents the material from sticking in the roll, and is easily removed for installation. The sheet membrane is available in two convenient widths of 36" and 48". The factory controlled thickness assures uniform thickness on the job, while the inherent waterproofing properties of the rubberized asphalt membrane provide an excellent water barrier.

TYPICAL USE
The CCW-711W Pre-Pave Sheet Membrane Waterproofing System is especially designed to be used as a waterproofing membrane on the structural slab of bridge decks and parking decks that are to be overlaid with asphalt paving & repaving exsisting roadways. CCW-711W Pre-Pave Sheet Membrane Waterproofing System will protect reflective cracking in the asphalt overlay while helping to retard structures from damage by water and deicing salts.

ADVANTAGES
- Inherent toughness of mesh assures the integrity of the membrane, allowing construction traffic on the installed membrane immediately.
- Paving can begin immediately after installation of the CCW-711W Pre-Pave Sheet Membrane. This includes the driving of asphalt trucks and paving machines on top of the overlay.
- The combination of woven mesh and elastomeric membrane ensures both the strength and flexibility to span moving cracks through seasonal temperature extremes.
- The membrane offers complete and interlaminary adhesion by bonding to both the substrate and the hot asphaltic overlay.
- Small punctures in the membrane will self-seal. Tears or other damage can quickly and easily be repaired.

PACKAGING
CCW-711W is sold in rolls of (one roll per box):
12" X 100' roll (100 ft²), 48 boxes per pallet
18" X 100' roll (150 ft²), 36 boxes per pallet
24" X 100' roll (200 ft²), 24 boxes per pallet
36" X 60' roll (180 ft²), 25 boxes per pallet

CCW-550 Primer and CCW-704 Mastic
5 gallon pails (45 pails per pallet)

INSTALLATION
Surface Preparation: New concrete shall be in place for 7 days (minimum) and shall be dry. Surface shall have a smooth finish and be free of voids, spalls, sharp protrusions, loose aggregate and form release agents. Curing agents containing wax, oil or pigment must not be used. Forms should be removed as quickly as possible.

TECHNICAL DATA

PROPERTY	METHOD	RESULTS
Thickness	–	65 mils
Tensile	ASTM D882	53 lb/in
Elongation*	ASTM D882	350%
Permeance	ASTM E96 (B)	.05 perms
Pliability	ASTM D146 180° bend	Passes @ -25°F .063" mandrel
Puncture	ASTM E154	200 lb (min)

*% of elongation to ultimate failure of rubberized asphalt membrane

In the event of rain, concrete must be allowed to dry before primer is applied. For optimum results, CCW-711W should be applied when air and surface temperatures are above 40°F.

Bridge Deck Preparation
Method One (Preferred): Mill all loose unbonded asphalt overlay from the existing deck. Place a bituminous/sand or fine aggregate mixture as a leveling course on the deck. Use CCW-201 Polyurethane Sealant as a cant strip at the intersection of the deck and curb or parapet wall for the transition from the horizontal to the vertical.

Place the CCW-711W membrane from the low to the high point of the deck, so that laps shed water. Overlap all edges at least 2-1/2", stagger end laps and place such that overlaps are in the direction of the paving.

Place a 12" wide strip of CCW-711W along the inside corner of the vertical curb to a height just below the surface of the asphaltic overlayment, extending at least 6" onto the horizontal CCW-711W membrane. Place a bead of CCW-704 Mastic on the top edge of the strip. The curb or parapet wall should be primed if weather conditions make it necessary.

The membrane may be rolled in place with a rubber tire roller before tack coat is applied.

Method Two: Remove all old coating from the concrete by brush blasting. Repair all concrete defects. Prime the deck with CCW-550 or CCW-702 primer during the morning hours. Place a CCW-201 cant strip at the intersection of the deck and curb or parapet wall.

Wait until in-gassing of the deck occurs, usually afternoon when the deck is cooling, before placing membrane. Place the CCW-711W membrane from the low to the high point of the deck, so that laps shed water. Overlap all edges at least 2-1/2", stagger end laps and place such that overlaps are in the direction of the paving.

Place a 12" wide strip of CCW-711W along the inside corner of the vertical curb to a height just below the surface of the asphaltic overlayment, extending at least 6" onto the horizontal CCW-711W membrane. Place a bead of CCW-704 Mastic on the top edge of the strip. The curb or parapet wall should be primed if weather conditions make it necessary.

The membrane may be rolled in place with a rubber tire roller before tack coat is applied.

Parking Deck Preparation

Terminations: Install a 1-1/2" CCW-201 Sealant cant into the inside corner of the curb or parapet and the deck. Allow sealant cant to cure overnight. Apply flashing at curbs to a height just below the surface of the asphaltic overlayment and extend the flashing strip at least 6" onto the horizontal deck surface. For decks with two section drains, install a 3 ft. by 3 ft. sheet centered over the drain and terminate sheet under the clamping ring. Apply final sheet membrane over the flashing and seal the edges with CCW-704 Mastic.

Joints and Cracks: Apply primer and allow to dry. Apply a 12 inch wide strip of CCW-711W Pre-Pave Membrane over all cracks and non-working joints. Apply a double layer of CCW-711W Pre-Pave Membrane over expansion joints in the structural slab. Steel finger joints and other expansion joints should be placed at the level of the asphalt concrete overlayment.

Priming: Stir the primer thoroughly. Apply by spray or with a long nap roller to all concrete surfaces in an even coat. For the CCW-550 apply at 400 to 600 ft² per gallon. For the CCW-702 apply at 300 to 350 ft² per gallon. At 75° F allow primer to dry 1 hr. minimum, 8 hrs. maximum. Primer has a satisfactory cure when surface is tacky, but does not transfer when touched. If CCW-711W Pre-Pave Membrane is not applied within maximum dry time, re-prime. When applying CCW-711W Pre-Pave Membrane to an asphalt surface, primer is not required but surface must be free of dirt, moisture or other contamination.

Application: Apply CCW-711W Pre-Pave Membrane from low to high point, in a shingle fashion so that laps will shed water. Overlap all edges at least 2-1/2", placed such that overlaps are in the direction of the paving. End laps shall be staggered. Place sheet membrane carefully so as to avoid wrinkles and fishmouths. After installation, roll with a metal roller wrapped with a resilient material 24" wide and weighing at least 100 lbs. or with a rubber tired roller. Seal all terminating edges and 'T' joints with CCW-704 Mastic.

Asphalt Overlayment Placement

Repairs: Before paving begins, inspect all membrane for tears, punctures, fishmouths, air bubbles or voids due to misalignment at seams. Remove damaged membrane. Prime exposed concrete and allow primer to dry. Apply new section of CCW-711W Pre-Pave Membrane to primed concrete extending onto adhered membrane 6" on all sides. Firmly roll repair section to ensure a good seal. Apply CCW-704 Mastic to terminating edges of patch.

Slit fishmouths and overlap the edges. Place CCW-711W Pre-Pave Membrane over the repair and extend 6" in all directions. Firmly roll repair section to ensure a good seal. Apply CCW-704 Mastic to the terminating edges of patch.

Apply Overlayment: Prior to applying overlayment, spray anionic asphalt emulsion (or equal) tack coat over mesh. CCW-711W Pre-Pave Sheet Membrane should be covered over with asphaltic overlayment in the same day as membrane installation. The temperature of the asphaltic overlayment at the point of application shall be 275°F minimum, 325°F maximum. Asphaltic overlayment shall be compacted to a minimum of 2 inch thick, at 275° - 285°F. A wearing course may be applied at the discretion of the engineer.

Asphaltic overlayment must not be applied if the CCW-711W Pre-Pave Sheet Membrane is wet.

Pneumatic tire equipment is recommended. Equipment must be continuously inspected to ensure tracks or tires are free of burrs, stones or sharp projections which could damage the membrane.

LIMITATIONS

- Do not use in areas where membrane will be subject to continuous exposure to sunlight.
- Do not apply primer or membrane to damp, frosty or frozen concrete.
- Best results are obtained when membrane is installed at temperatures above 40° F.
- Do not use over sealants containing coal tar or polysulfides.

WARNINGS AND HAZARDS

CCW-550 and CCW-704 contain flammable and combustible solvents. Avoid exposure to open heat and flame. Avoid breathing vapors. Use only in areas with adequate ventilation. Refer to MSDS for important warnings and product information.

STORAGE

CCW-711W rolls should be stored on end, under cover, and in areas where the temperature is between 40° and 100°F (4.4° and 38°C). Do not double stack pallets

LIMITED WARRANTY

Carlisle Coatings & Waterproofing, Incorporated (Carlisle) warrants this product to be free of defects in workmanship and materials only at the time of shipment from our factory. If any Carlisle materials prove to contain manufacturing defects that substantially affect their performance, Carlisle will, at its option, replace the materials or refund its purchase price.

This limited warranty is the only warranty extended by Carlisle with respect to its materials. There are no other warranties, including the implied warranties of merchantability and fitness for a particular purpose. Carlisle specifically disclaims liability for any incidental, consequential, or other damages, including but not limited to, loss of profits or damages to a structure or its contents, arising under any theory of law whatsoever.

The dollar value of Carlisle's liability and buyer's remedy under this limited warranty shall not exceed the purchase price of the Carlisle material in question.

900 Hensley Lane • Wylie TX 75098
800-527-7092 • www.carlisle-ccw.com

CARLISLE Coatings & Waterproofing

Carlisle is a trademark of Carlisle. © 2008 Carlisle. 600191 CCW-711W 04/08 HJE

MATERIAL SAFETY DATA SHEET

CCW-711
Supersedes 1/23/03. Page 1 of 5
MATERIAL SAFETY DATA SHEET

1. PRODUCT AND COMPANY IDENTIFICATION

Product Name: Rubberized Asphalt Membrane with Polyolefin Film or Fabric. This sheet is applicable to: CCW-711, all configurations.
Synonyms: Rubberized asphalt self-adhering sheet with polyethylene film
Manufacturer/Supplier
Carlisle Coatings & Waterproofing Incorporated
900 Hensley Lane
Wylie, TX 75098
Internet Address: www.Carlisle-CCW.com
Fax Number: (972) 442-0076
Phone Numbers
Medical Emergency:
CHEMTREC(USA): (800) 424-9300
CHEMTREC(International)::
MSDS Assistance: (972) 442-6545
Fax On Demand: NA

2. COMPONENT INFORMATION

Component CAS No. Percent Range Hazardous in Blend
Petroleum Asphalt 8052-42-4 60-80
Rubber- Copolymer 9003-55-8 5-20
Hydrotreated Heavy
Naphthenic Distillate
64742-52-5 <20
This product is hazardous according OSHA 29 CFR 1910.1200.
Hazards:
Flammable/Combustible X Acute Toxin X Chronic
Toxin
X Carcinogen X
Pressure No Reactive No Exposure Limit Target Organ Other

3. HAZARDS IDENTIFICATION

Emergency and Hazards Overview:
Repeated skin contact with rubberized asphalt may result in slight irritation. Prolonged skin contact with process oil in the rubberized asphalt may cause an increased risk of skin cancer, liver damage and reproduction effects based on laboratory animals tests. Skin cleansing studies with aromatic oils show that the toxic effects are not likely to occur to humans if good personal hygiene practices are used. May be harmful if swallowed. Read and understand all health and safety information on the product label and Material Safety Data Sheet before use.
Ratings
Health 2 **Flammability** 1 **Reactivity** 0
Primary Route of Exposure: Skin x Inhalation x Eye x Ingestion x
Health Effect Information
Eye Contact: May cause eye irritation if wiped or rubbed into eyes.
Skin Contact: May cause skin irritation on prolonged or repeated contact.

Inhalation: Inhaltation is unlikely due to the nature of this product
Ingestion: There are no known health effects due to ingestion. Ingestion is unlikely due to the nature of this product.
CCW-711 membranes, all configurations. Supercedes 1/23/03. Page 2 of 5
Medical Conditions Aggravated by Exposure: Prolonged contact with oil residues in this product may produce effects including skin cancer.

4. FIRST AID INFORMATION

Eye Contact: Flush with water for 15 minutes. Get medical attention immediately.
Skin Contact:. Wipe off and wash skin with soap and water. Promptly remove contaminated clothing and wash before reuse. See a physician if irritation develops.
Inhalation: No known adverse effect unless heated.
Ingestion:. Due to the nature of this product ingestion is unlikely. Consult a physician immediately.
Notes to Physician: This product contains asphalt and mineral process oil.

5. FIRE AND EXPLOSION INFORMATION

Flammable Properties
Flash Point: >450?F **Test Method:** COC
Flame extension: NA **Test Method:** NA
Flammable Limits in Air
Upper Percent: NA
Lower Percent: NA
Autoignition Temperature: NA **Test Method:** NA
NFPA Classification: H 2 F 1 R 0
Extinguishing Media: CO_2, foam, dry chemical or water spray.
Fire Fighting Measures
Special Fire Fighting Procedures and Equipment: Wear NIOSH/MSHA approved respirators, or self-contained breathing apparatus(SCBA).
Unusual Fire and Explosion Conditions: Nonc known.
Hazardous Combustion By-Products: CO, CO_2, unburned hydrocarbons.

---

6. ACCIDENTAL RELEASE MEASURES

Personnel Safeguards: Evacuate non-essential personnel to safe areas. Clean-up responders should wear proper protective clothing and gloves before entering the affected area.
Regulatory Notifications: Certain component of this product is defined as hazardous according to U.S. EPA. Spill reporting requirements and reportable quantities vary by region.
Consult all applicable state and local regulations. For Canada, observe all precautions noted above.
Containment and Clean up: Observe above precautions, thoroughly clean the area and remove materials for disposal.

---

7. HANDLING AND STORAGE INFORMATION

Handling: Avoid prolonged contact with skin. Use gloves impervious to oil. Avoid rubbing eyes while handling.
Storage: Store in dry, cool environment. Keep containers closed when not in use.
Empty Container Warnings
Drums: NA
Plastic: NA

---

8. EXPOSURE CONTROLS / PERSONAL PROTECTION INFORMATION

Exposure Limits and Guidelines
Component CAS No. Exposure Limit
CCW-711
Supercedes 1/23/03 Page 3 of 5
Asphalt 8052-42-4 5 mg/m3 TWA
Hydrated Naphthenic Distillate 64742-52-5 5 mg/m3 TWA, 10mg/m3 ACGIH
STEL
$CaCO_3$ 1317-65-3 2 mg/m3 ACGIH TLV
Personal Protective Equipment
Eye/Face Protection: Wear safety goggles during hot melt application.
Skin Protection: Use protective insulation gloves during hot melt application.
Respiratory Protection: Provide adequate ventilation to maintain vapors below PEL/TWA. If vapor levels are exceeded, use NIOSH approved respirator, both during and immediately after application, until vapor levels are below limits.
Personal Hygiene: Avoid rubbing eyes during handling. Due to the nature of this product ingestion is unlikely. Use good personal hygiene practices to avoid incidental ingestion.
Engineering Controls / Work Practices
Ventilation: If material is heated or otherwise made airborne, provide local exhaust or area ventilation to maintain concentration of vapors below 5 mg/m3 PEL/TWA.
Other: Source of clean water should be available in the work area for flushing eyes and skin. Wash thoroughly with soap and water after use and before eating.

---

9. PHYSICAL AND CHEMICAL PROPERTIES
Appearance: Black rubberizd asphalt **Vapor Pressure:** NA
Odor: Slight petroleum odor
Physical state: Pliable solid **Vapor Density (air=1): NA**
pH: NA **Percent Volatile by Volume:** Negligible
DOT Corrosivity: NA **Volatile Organic Content:** Negligible
Boiling Point: NA **Molecular Weight:** NA
Melting Point: 190 to 264F **Average Carbon Number:** NA
Specific Gravity: 1.0-1.2 **Viscosity @ 77 F:** Solid
Pour Point: >300?F
Solubility in Water: Negligible
Octanol / Water Coefficient: Log K_{ow} = NA

---

10. STABILITY AND REACTIVITY INFORMATION
Chemical Stability: Stable under normal condition.
Conditions to Avoid: Avoid extreme heat, fire and temperature.
Incompatible Materials to Avoid: Avoid strong acids, strong oxidizers.

---

11. TOXICOLOGICAL INFORMATION (will only print available data)
Primary Eye Irritation: Irritating
Primary Skin Irritation: May be irritating
Acute Dermal Toxicity: NA
Subacute Dermal Toxicity: NA
Dermal Sensitization: NA
Inhalation Toxicity: NA
Inhalation Sensitization: NA
Oral Toxicity: Mineral oil mist, LD_{50}(mouse): 22,000 mg/kg
Mutagenicity: NA
Carcinogenicity: Prolonged >5mg/m3 oil mist exposure may result in a cancer risk. Due to the nature of the product it is unlikely that the $CaCO_3$ will be airborne.
CCW-711

Reproductive Toxicity: NA
Teratogenicity: NA
Immunotoxicity: NA
Neurotoxicity: NA
Other: No other toxicological information available

---

12. ECOLOGICAL INFORMATION
Aquatic Toxicity: Not known
Terrestrial Toxicity: Not known
Chemical Fate and Transport: Not known
No other ecological information available

---

13. DISPOSAL INFORMATION
Regulatory Information: Consult all regulations (federal, state, provincial, local etc.) or a qualified waste disposal firm when characterizing waste for disposal.
Waste Disposal Methods: Dispose of in accordance with all applicable regulations.

---

14. TRANSPORTATION INFORMATION
U.S. Department of Transportation (DOT)
Highway / Rail (Bulk): Not classified
Highway / Rail (Non-Bulk): Not classified
The DOT description is provided to assist in the proper shipping classification of this product and may not be suitable for all shipping descriptions.
International Information
Vessel: IMDG Regulated: Not classified **IMDG Not Regulated**
Air: ICAO Regulated: Not classified **ICAO Not**
Other: No other information available.

---

15. Regulatory Information
Regulatory Lists
U.S. TSCA Inventory: All components of this material are on the US TSCA Inventory or exempt from listing on the TSCA Inventory.
Sara Section 313: This product contains no chemical listed in Sara, Title III, Section 313 Chemicals:
Chemical CAS Number Percent in Product
Regulatory Lists Searched
Health & Safety: NA
Environmental: NA
International: NA
State: FL, MA, MN, PA, RI
National Inventories: NA
SARA 311 / 312 Categories
Acute: Yes **Chronic:** Yes **Fire:** No **Pressure:** No **Reactive:** No
Not Regulated:
California Proposition 65 Information: Warning! This product contains substances known to the state of California to cause cancer.
CCW-711, all configurations.

Canadian WHMIS Classification
Class: Class B
Division: 4
This product has been classified in accordance with hazard criteria of the Controlled Products Regulations (CPR). This MSDS contains all the information required by the CPR.
European Union Classification
Hazard Symbol:
Toxic
Risk Phrases: R45
Safety Phrases: S38, S45, S53
Other Regulations: No other information available.

---

16. OTHER INFORMATION
Health and Environmental Label Language
All ingredients contained in this product are included on the US EPA Toxic Substances Control Act (TSCA) inventory or exempt from listing on the TSCA inventory. All ingredients contained in this product comply with the requirements of the Canadian Environmental Protection Act (CEPA) and are listed on the Domestic Substance List (DSL) or Non-Domestic Substance List (NDSL)
MSDS Revisions
Previous Version Date: 01/23/03
Section
Old Information: 16-part version
New Information: 16-part version
Prepared By: Alvin Binkley **Date:** 06/30/08
Disclaimer of Warranty: The information contained herein is based upon data and information available to us, and reflects our best professional judgement. This product may be formulated in part with components purchased from other companies. In many instances, especially when proprietary or trade secret materials are sued, Carlisle Coating and Waterproofing Inc. rely upon the hazard evaluation of such components submitted by that product's manufacturer or importer. No warranty of merchantability, fitness for any use, or any other warranty is expressed or implied regarding the accuracy of such data or information. The results to be obtained from the use thereof, or that any such use does not infringe any patent, since the information contained herein may be applied under conditions of use beyond our control and with which we may be unfamiliar, we do not assume responsibility for the results of such application. This information is furnished upon the condition that the person receiving it shall make his own determination of the suitability of the material for his particular use.

Coatings & Waterproofing

CCW-AWP

For Use With Sheet Membranes

DESCRIPTION

CCW AWP is a single component latex-based primer. CCW AWP is an accessory product to the CCW MiraDRI 860/861 sheet membrane and is designed to set the dust on concrete and block surfaces, to promote adhesion of the CCW waterproofing membrane to the substrate.

CCW AWP should be spray applied at a coverage rate of 400 ft² (37.2 m²) per gallon (3.8 liters). Several types of sprayers– Airless, Air Assist, Hudson– may be used. (CCW AWP may also be applied using a roller. However, caution must be taken not to apply excess primer which could cause longer drying times.) Normal drying time will be approximately 30 minutes depending on job site conditions. Upon curing, CCW AWP will not transfer when touched. Surfaces exposed for more than 24 hours must be reprimed as they may collect dust and other contaminants causing adhesion problems. CCW AWP should be applied at temperatures above 40°F (4.4°C).

PACKAGING

1 gallon pails; 180 pails per pallet (45 ct [4-1 gal])
5 gallon pails; 36 pails per pallet

Do not store CCW AWP in direct sunlight or at temperatures above 110°F (43°C) or below 35°F (2°C). Improper storage could lead to product deterioration.

CAUTION: Avoid contact with eyes and skin. In the event of contact, wash off immediately. Refer to MSDS for other important warnings and product safety information.

TECHNICAL DATA

PROPERTY	RESULTS
Weight per Gallon	8.2 ± 0.02 lbs
Solids Content	35% ± 2% by wt
Color	Blue
Flash Point	N/A
Adhesion to Concrete	9.5 lb/lin in
Minimum Application Temp	40°F (4.4°C)
Viscosity	60-90 cps
Storage Temp	35°F to 110°F

LIMITED WARRANTY

Carlisle Coatings & Waterproofing, Incorporated (Carlisle) warrants this product to be free of defects in workmanship and materials only at the time of shipment from our factory. If any Carlisle materials prove to contain manufacturing defects that substantially effect their performance, Carlisle will, at its option, replace the materials or refund its purchase price.

This limited warranty is the only warranty extended by Carlisle with respect to its materials. There are no other warranties, including the implied warranties of merchantability and fitness for a particular purpose. Carlisle specifically disclaims liability for any incidental, consequential, or other damages, including but not limited to, loss of profits or damages to a structure or its contents, arising under any theory of law whatsoever.

The dollar value of Carlisle's liability and buyer's remedy under this limited warranty shall not exceed the purchase price of the Carlisle material in question.

900 Hensley Lane • Wylie TX 75098
800-527-7092 • www.carlisle-ccw.com

Coatings & Waterproofing

Carlisle is a trademark of Carlisle. © 2008 Carlisle. 602798 CCW-AWP HJE

HARDCAST

MATERIAL SAFETY DATA SHEET

1. PRODUCT AND COMPANY IDENTIFICATION

Product Name: CCW AWP (All weather Primer)
Synonyms: Water-Based Adhesive

Manufacturer/Supplier
Carlisle Coatings & Waterproofing Incorporated
900 Hensley Lane
Wylie, TX 75098
Internet Address: http://www.ccwcompanies.com/
Fax Number: (972) 442-0076

Phone Numbers
Medical Emergency:
CHEMTREC (USA): (800) 424-9300
CHEMTREC (International):
MSDS Assistance: (972) 442-6545
Fax On Demand: NA
Technical Assistance: (888) 229-2199
Customer Service: (888) 229-0199

2. COMPONENT INFORMATION

Component	CAS No.	Percent Range	Hazardous in Blend
Methanol	67-56-1	0.5 – 2	

This product is not hazardous according OSHA 29 CFR 1910.1200.

Hazards:

Flammable/Combustible No **Acute Toxin** No **Chronic Toxin** No **Carcinogen** No

Pressure No **Reactive** No **Exposure Limit** ___ **Target Organ** ___ **Other** ___

2A. OTHER INGREDIENTS Greater than 3%

Component	CAS No.
Latex	108-05-04
Dispersion	Mixture

3. HAZARDS IDENTIFICATION

Emergency and Hazards Overview:
May cause moderate irritation to eyes. May be harmful if swallowed. Read and understand all health and safety information on the product label and Material Safety Data Sheet before use.

Ratings
Health 1 **Flammability** 0 **Reactivity** 0

Primary Route of Exposure: Skin x Inhalation x Eye x Ingestion x

Health Effect Information

Eye Contact: May cause eye irritation if wiped or rubbed into eyes.

Skin Contact: May cause mild skin irritation on prolonged or repeated contact.

Inhalation: Breathing high concentrations of vapors may cause nausea & irritation of nose, throat, & respiratory tract. Respiratory symptoms associated with pre-existing lung disorders may be aggravated by exposure to this material.

Ingestion: Ingestion of large quantity may cause initial central nervous system stimulation, followed by depression.

Medical Conditions Aggravated by Exposure: Prolonged exposure to vapors could aggravate pre-existing disorders in lungs, kidney and liver.

4. FIRST AID INFORMATION

Eye Contact: Flush with water for 15 minutes. Get medical attention immediately.

Skin Contact: Wipe off and wash skin with soap and water. Promptly remove contaminated clothing and wash before reuse.

Inhalation: Remove to fresh air. If breathing has stopped, start artificial respiration. Oxygen may be administered. Consult physician immediately

Ingestion: Do not induce vomiting unless directed to do so by a physician. Consult a physician immediately.

5. FIRES AND EXPLOSION INFORMATION

Flammable Properties

Flash Point: No flash to boiling — **Test Method:** Closed cup
Flame extension: NA — **Test Method:** NA
Flammable Limits in Air
Upper Percent: NA
Lower Percent: NA
Auto ignition Temperature: NA — **Test Method:** NA

NFPA Classification: H 1 F 0 R 0

Extinguishing Media: CO_2, foam, dry chemical or water spray.

Fire Fighting Measures

Special Fire Fighting Procedures and Equipment: Firemen must wear full-face air-supplied masks and full protective clothing.

Unusual Fire and Explosion Conditions: This product is not sensitive to physical shock or static discharge. Exposure of closed container to temperatures above the boiling point could cause pressure buildup and container rupture.

Hazardous Combustion By-Products: CO, CO_2, unburned hydrocarbons, or nitrous oxides.

6. ACCIDENTAL RELEASE MEASURES

Personnel Safeguards: Evacuate non-essential personnel to safe areas. Clean-up responders should wear proper protective clothing and gloves before entering the affected area.

Regulatory Notifications: Certain component of this product is defined as hazardous according to U.S. EPA. Spill reporting requirements and reportable quantities vary by region. Consult all applicable state and local regulations. For Canada, observe all

precautions noted above.

Containment and Clean up: Prevent product from entering drinking water supplies or streams. Observe above precautions, collect liquid with inert, noncombustible material and remove for disposal.

7. HANDLING AND STORAGE INFORMATION

Handling: Normal use condition doesn't produce respirable Silica. However, sanding, grinding, and burning might release respirable Silica. Keep out of reach of children. Launder contaminated clothing. Wash hands with soap and water after use, especially before eating or drinking.

Storage: Store in a dry, well ventilated environment away from heat, above 35 deg F and below 110 deg F. Keep containers closed when not in use. Do not pressurize, cut weld or grind containers.

Empty Container Warnings

Drums: Drums may be reused after wash.
Plastic: Plastic containers may be reused after wash.

8. EXPOSURE CONTROLS / PERSONAL PROTECTION INFORMATION

Exposure Limits and Guidelines

Component	CAS No.	Exposure Limit
Methanol	67-56-1	200 ppm OSHA PEL 200 ppm ACGIH TWA, 250 ppm STEL

Personal Protective Equipment

Eye/Face Protection: Wear safety goggles or face shield. Contact lenses should not be worn.

Skin Protection: Use protective rubber gloves (Hycron, neoprene, or nitrile).

Respiratory Protection: Provide adequate ventilation to maintain vapors below PEL/TWA. If vapor levels are exceeded, use NIOSH approved respirator, both during and immediately after application, until vapor levels are below limits.

Personal Hygiene: Avoid rubbing eyes during handling. Use good personal hygiene practices to avoid incidental ingestion.

Engineering Controls / Work Practices

Ventilation: Provide local exhaust or area ventilation to maintain concentration of vapors below PEL/TWA.

Other: Source of clean water should be available in the work area for flushing eyes and skin. Wash thoroughly with soap and water after use and before eating.

9. PHYSICAL AND CHEMICAL PROPERTIES

Appearance: Pale blue liquid	**Vapor Pressure:** 17 mm Hg @ 20°C
Odor: Typical latex odor	
Physical state: Liquid	**Vapor Density (air=1):** <air
pH: Slightly acidic	**Percent Volatile by Weight:** 63- 67
DOT Corrosivity: NA	**Volatile Organic Content:** 58 g/liter (less water)
Boiling Point: 212°F	**Molecular Weight:** NA
Melting Point: NA	**Average Carbon Number:** NA
Specific Gravity: 1.02	**Viscosity @ 77 F:** 70 - 150 cps
Pour Point: NA	
Solubility in Water: Miscible with water	
Octanol / Water Coefficient: Log K_{ow} = NA	

10. STABILITY AND REACTIVITY INFORMATION

Chemical Stability: Stable

Conditions to Avoid: Avoid extreme heat, fire and temperature.

Incompatible Materials to Avoid: Avoid strong acids, strong oxidizers.

11. TOXICOLOGICAL INFORMATION (will only print available data)

Methanol

Primary Eye Irritation: Irritating
Primary Skin Irritation: NA
Acute Dermal Toxicity: Product toxicity has not been determined. Following are component data:
LC50: rat=64,000 ppm/4h (sax)
LD50: oral-rat=5628 mg/kg; skin-rabbit=20g/kg (sax)
Sub acute Dermal Toxicity: NA
Dermal Sensitization: NA
Inhalation Toxicity: Product toxicity has not been determined. Following are component data:
LC50: rat=64,000 ppm/4h (sax)
LD50: oral-rat=5628 mg/kg; skin-rabbit=20g/kg (sax)
Inhalation Sensitization: NA
Oral Toxicity: Product toxicity has not been determined. Following are component data:
LC50: rat=64,000 ppm/4h (sax)
LD50: oral-rat=5628 mg/kg; skin-rabbit=20g/kg (sax)
Mutagenicity: NA
Carcinogenicity: NA
Reproductive Toxicity: Product toxicity has not been determined. Following are component data:
LC50: rat=64,000 ppm/4h (sax)
LD50: oral-rat=5628 mg/kg; skin-rabbit=20g/kg (sax)
Teratogenicity: NA
Immunotoxicity: NA
Neurotoxicity: NA

12. ECOLOGICAL INFORMATION

Methanol

Aquatic Toxicity: Methanol has only slight chronic toxicity to aquatic life. AT rating of methanol is TLm96>1000 ppm. AT effects may include death or low growth rate of plants

Terrestrial Toxicity: TT effects may include death or growth rate of plants. Insufficient data to predict long term chronic effects of methanol on plants are available.

Chemical Fate and Transport: Not known

Ecological Toxicity: ET effects may include death of fish or marine organisms exposed. Insufficient data are available to evaluate long term effect on birds.

13. DISPOSAL INFORMATION

Regulatory Information: Consult all regulations (federal, state, provincial, local etc.) or a qualified waste disposal firm when characterizing waste for disposal.

Waste Disposal Methods: Recover free liquid. Absorb residue and dispose of according to local, state and Federal EPA regulation. Empty container: may contain explosive vapors. Do Not cut, puncture or weld on or nearby.

14. TRANSPORTATION INFORMATION

U.S. Department of Transportation (DOT)
Highway / Rail: Not regulated by DOT

The DOT description is provided to assist in the proper shipping classification of this product and may not be suitable for all shipping descriptions.

Other: No other information available.

15. REGULATORY INFORMATION

Regulatory Lists

U.S. TSCA Inventory: All components of this material are on the US TSCA Inventory or exempt from listing on the TSCA Inventory.

Sara Section 313: This product contains the following Sara, Title III, Section 313 Chemicals:

Chemical	CAS Number	Percent in Product
Methanol	67-56-1	0.5 - 2

IARC Group: NA

Regulatory Lists Searched

This product contains a component found on the following State List at or above OSHA de minimis quantities

Health & Safety: NA
Environmental: NA
International: NA
State: FL, MA, MN, PA, NJ, WA
National Inventories: NA

SARA 311 / 312 Categories (For the Chemical above)

Acute: Yes **Chronic:** Yes **Fire:** Yes **Pressure:** No **Reactive:** No
Regulated: No

California Proposition 65 Information: Warning! None in the list

Canadian WHMIS Classification
Class: Class B2 and D2B
This product has been classified in accordance with hazard criteria of the Controlled Products Regulations (CPR). This MSDS contains all the information required by the CPR.

Canadian Environmental Protection Act (CEPA)
All reportable chemical substance is listed on the Domestic Substances List (DSL) or otherwise complies with CEPA new substance notification requirements.

National Pollution Release Inventory (NPRI)
This product contains the following chemical subject to the reporting requirements of the CEPA subsection 16(1), NPRI.

Chemical	CAS Number	Percent in Product
Methanol	67-56-1	0.5 - 2

Other Regulations: No other information available.

16. OTHER INFORMATION

Health and Environmental Label Language
All ingredients contained in this product are included on the US EPA Toxic Substances Control Act (TSCA) inventory or exempt from listing on the TSCA inventory. All ingredients contained in this product comply with the requirements of the Canadian Environmental Protection Act (CEPA) and are listed on the Domestic Substance List (DSL) or Non-Domestic Substance List (NDSL)

MSDS Revisions
Previous Version Date: 06/01/05
Section
Old Information:
New Information: Revision on Section 2A

Prepared By: R&D Department Date: 07/01/08

Disclaimer of Warranty: The information contained herein is based upon data and information available to us, and reflects our best professional judgment. This product may be formulated in part with components purchased from other companies. In many instances, especially when proprietary or trade secret materials are used, CCWI Company must rely upon the hazard evaluation of such components submitted by that product's manufacturer or importer. No warranty of merchantability, fitness for any use, or any other warranty is expressed or implied regarding the accuracy of such data or information. The results to be obtained from the use thereof, or that any such use does not infringe any patent, since the information contained herein may be applied under conditions of use beyond our control and with which we may be unfamiliar, we do not assume responsibility for the results of such application. This information is furnished upon the condition that the person receiving it shall make his own determination of the suitability of the material for his particular use.

web www.graceconstruction.com
■PRODUCT DATA ■UPDATES ■TECH LETTERS ■DETAILS ■MSDS ■CONTACT ■FAQS

Bituthene® 5000

Durable, self-adhesive waterproofing membrane engineered to accept hot asphaltic overlays

Advantages

- **Self adhesive** – no heating plant or hot bedding adhesive required; self sealing overlaps provide continuity
- **Flexible** – easily applied, conforms to changes in profile
- **Robust** – accepts paving machinery
- **Pre-formed** – guaranteed thickness; not subject to site variation
- **Mesh reinforced** – provides dimensional stability and resistance to damage
- **Homogenous waterproofing layer** – asphaltic concrete flows into mesh when compacted
- **Fully-adhered** – prevents water migration under waterproofing layer

Description

Bituthene® 5000 Waterproofing Membrane is a factory-made composite product with a nominal thickness of 1.7 mm (0.065 in). It is composed of 1.4 mm (0.056 in.) of rubberized asphalt and a layer of heat-resistant, woven polypropylene mesh.

Bituthene 5000 Waterproofing Membrane is supplied in rolls. The rubberized asphalt is covered with a release sheet which is removed during installation. The membrane is self-adhesive and cold applied. No special adhesives or equipment are required to form laps.

Use

Bituthene 5000 Waterproofing Membrane is ideal for waterproofing concrete surfaces on which hot asphaltic concrete overlays are installed, such as on parking decks and bridges where in-service temperatures will not exceed 54°C (130°F).

Note: For concrete wearing courses use Bituthene 3000, Bituthene Low Temperature or Bituthene System 4000 Waterproofing Membranes.

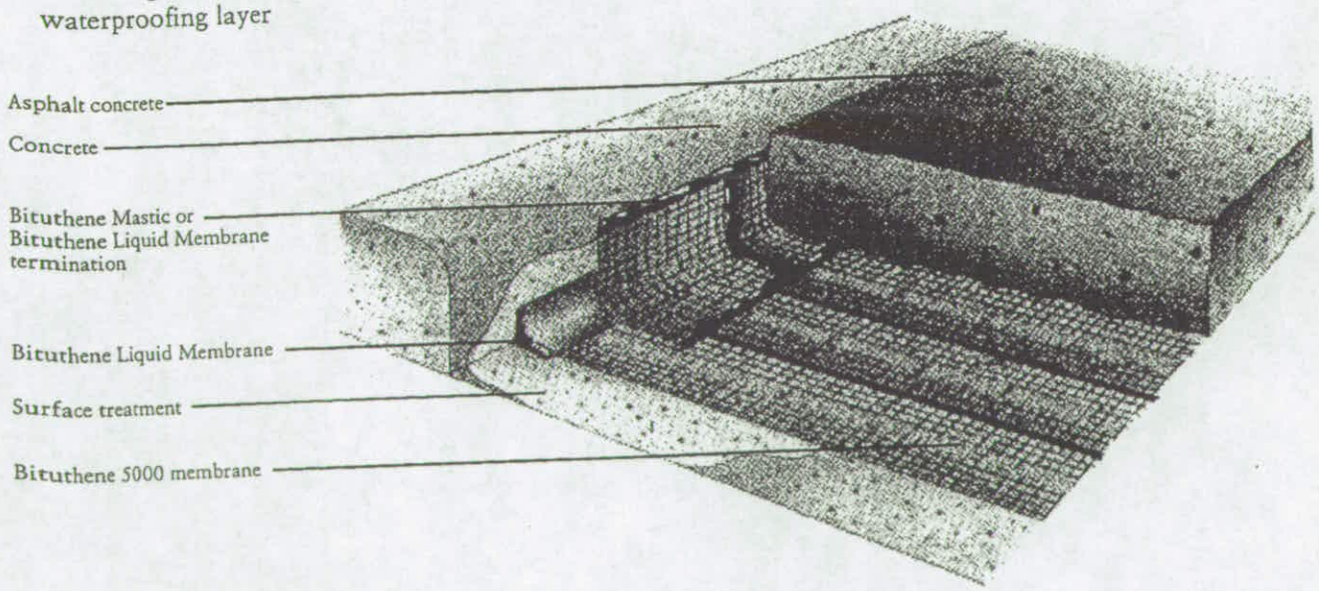

GRACE
Construction Products

Application Procedures

Safety, Storage and Handling Information

Bituthene products must be handled properly. Vapors from solvent-based primers and mastic are harmful and flammable. For these products, the best available information on safe handling, storage, personal protection, health and environmental considerations has been gathered. Material Safety Data Sheets (MSDS) are available at www.graceconstruction.com and users should acquaint themselves with this information. Carefully read detailed precaution statements on product labels and the MSDS before use.

Surface Preparation

Concrete must be structurally sound with a smooth, uniform surface. Surfaces shall be free of voids, spalled areas, loose aggregated and sharp protrusions with no coarse aggregate visible. New broom finishes are not recommended. Thoroughly clean all surfaces of old waterproofing, oil, grease or other contaminants. Surfaces defects should be corrected as directed by the project engineer. New concrete should be cured and dry for a minimum of 7 days. The membrane can be installed over new concrete in less than 7 days when using Bituthene Primer B2. Dry time of new or patching concrete will vary with weather conditions and mix design. Consult the project engineer for cure and dry times. Forms must be removed to allow proper drying of concrete. Concrete surfaces must be clean and dry prior to installation of the Bituthene 5000 Waterproofing Membrane.

New concrete may be cured with a clear, resin-based curing compound. Bituthene 5000 is not compatible with concrete treatments that contain oil, wax, silicone or pigment.

Surface Treatment

Treat all concrete surfaces to receive Bituthene 5000 Waterproofing Membrane either with Bituthene Primer B2, Bituthene Primer WP-3000 or Bituthene Deck Prep® Surface Treatment prior to the installation of the membrane. Do not apply primer to Bituthene membrane.

Bituthene Primer B2

Apply Bituthene Primer B2 at a rate of 6 m^2/L (250 ft^2/gal). Primer can be applied with a lambs wool roller. Primer should dry one hour or until tack free. Primer will dry to a dark gray color. Prime only the area which will be covered with membrane in a working day. Areas not covered within 24 hours should be reprimed. Metal does not require priming but must be clean, dry and free of grease, oil, dirt, loose paint, rust or other contaminants. Fresh asphaltic concrete or thoroughly dry asphalt slurry seals do not require priming. Old, oxidized or dusty asphalt surfaces should be primed at a rate of 7.4-10.0 m^2/L (300-400 ft^2/gal).

Bituthene Primer WP-3000

Apply Bituthene Primer WP-3000 by roller or spray to a clean, dry, frost-free surfaces at a rate of 12-15 m^2/L (500-600 ft^2/gal). Coverage should be uniform.

Allow Bituthene Primer WP-3000 to dry one hour or until concrete returns to its original color. At low temperatures or in high humidity, dry time may be longer. WP-3000 is clear when dry and may be slightly tacky. Priming should be limited to an area that can be covered with membrane within 24 hours.

Bituthene Deck Prep

Bituthene Deck Prep Surface Treatment is ideally suited as a leveling course and preparation treatment for rough, irregular concrete decks. Bituthene primers are not necessary when using Bituthene Deck Prep.

All surfaces must be dry and free of dirt, grease oil dust or other contaminants. Bituthene Deck Prep should be applied when ambient and concrete temperatures are above -4°C (25°F).

Cold temperatures will extend cure times. For application in ambient and concrete temperatures below 4°C (40°F), store containers in a warm area until use.

To prepare Bituthene Deck Prep, add contents of Part B container and Part A and mix for at least 5 minutes, or until uniform. Take care to assure thorough mixing. Poorly mixed material will not cure properly. Bituthene Deck Prep Surface Treatment may be mixed by hand, however, low speed (150 rpm) mechanical mixer with flat paddle blades is preferable and will ease mixing.

Once mixed, Bituthene Deck Prep must be spread by squeegee within 1.5 hours. Maximum time for application is longer at low temperatures. At higher temperatures thickening and curing will occur in less than 90 minutes. Material that has cured must be discarded in accordance with federal, state and local regulations. Bituthene Deck Prep will cure to a tough, flexible rubber. Membrane installation can begin as soon as the surface treatment has cured.

Drainage and Joints

The deck should be pitched towards gutters and drains. Weep holes or drainage openings should be provided at the structural deck level to drain water which permeates through the asphaltic concrete.

A 200 mm (8 in.) reinforcing strip of Bituthene 5000 must be applied over non-working joints or cracks over 3 mm (0.125 in.) wide before applying the full coverage of

membrane. Terminate Bituthene 5000 at expansion joints and seal terminations with Bituthene Mastic. At steel expansion dams, terminate membrane on the concrete deck and apply Bituthene Mastic at the termination to assure a tight seal. Steel finger joints or other expansion joint assemblies should be placed to the level of the concrete.

Placement of Membrane

Apply Bituthene 5000 so that side laps are in the direction of paving and shed water. End laps should be staggered. Membrane shall be overlapped a minimum of 50 mm (2 in.) along the lateral side and 150 mm (6 in.) on end laps. If the installation can not be completed in a single working day, seal the perimeter of the membrane with Bituthene Mastic.

Application of the membrane shall begin and end on the horizontal surface. Vertical terminations along curb lines, expansion dams or any other protrusion shall receive a trowel of Bituthene Mastic. Mastic should cover the edge of the membrane and extend no higher than the planned level of the wearing surface.

Inspection and Repair

Care should be exercised to prevent damage to membrane. Any areas which are damaged must be cleaned and patched to the satisfaction of the project engineer.

Repair blisters by puncturing and forcing out trapped air. Small punctures will self-seal. Tears or any other damage should be treated by placing a patch of membrane over the damaged area. Patch should extend in all directions a minimum of 100 mm (4 in.) from damaged area. If blisters develop during paving, relieve pressure by puncturing blister at the end of the blister.

Asphaltic Concrete Application

The asphaltic concrete pavement shall be placed as soon as possible after the installation of the Bituthene 5000 Waterproofing Membrane to reduce the risk of damage to the membrane. The thickness of the overlay is recommended for most light traffic areas. Thicker overlays are recommended for heavy traffic areas or areas with severe environmental exposure.

The asphaltic concrete temperature in the paving machine hopper must be between 135°C (275°F) and 150°C (300°F). It should be noted that the temperature of the initial loads in the hopper may lose up to 5°C (40°F) en route to the deck due to thermal transfer to cold machinery. In all cases, initial compaction of the overlay should occur at a minimum asphaltic concrete temperature of 135°C (275°F) at the deck. Failure to compact the overlay at 135°C (275°F) or higher may result in premature deterioration of the asphaltic concrete overlay. Do not use any protection course between Bituthene 5000 and the asphaltic concrete overlay. Following rain, paving must be delayed until the membrane surface is dry.

While flat tracked paving equipment is preferred, either flat tracked or pneumatic tire equipment may be used. Equipment should be inspected prior to use for burrs, stones or sharp projections on tracks which could damage the membrane.

Asphaltic concrete should not be dumped in windrows on the membrane but should be delivered directly from the truck to the paver hopper. Pavers should avoid stopping with a full hopper or build up asphaltic concrete in auger. Paver screeds should be preheated to facilitate the movement of the asphaltic concrete but burners should be turned off prior to paving as flames may damage the membrane. The level of asphaltic concrete in the auger should be kept just below the level of the auger shaft.

Asphaltic Concrete Compaction

Compaction is the single most important factor affecting the ultimate performance of a hot mix asphalt pavement. There are four factors which interact and impact the proper compaction of an asphaltic concrete pavement: mix design, environmental variables, site conditions and equipment.

Mix Design

The asphaltic concrete mix must be designed to withstand the stresses on the asphaltic concrete pavement that are anticipated during service. Factors which can impact the performance of the asphaltic concrete pavement include volume and weight of traffic, exposure to salt water or deicing chemicals, thermal cycles and road grade.

A continuously graded aggregate from coarse to fine is typically easier to compact than a mixture with any other aggregate gradation. The asphaltic content of the mix influences compactability. Asphalt content will typically range between 5% and 10% of the mix weight. In general, a mix with too little asphalt tends to be stiff and will require increased compaction whereas a mix with too much asphalt will tend to shove. A mix that is placed at a higher temperature will be easier to compact than a mix that is lower in temperature.

Sand mixes tend to be softer and easier to compact but more easily affected by in service stresses than aggregated mixes.

Environmental Factors

Mat thickness, air temperature, substrate temperature, mix temperature, wind and solar flux have an

Supply

Bituthene 5000	0.9 m x 20 m roll (18.6 m²) 3 ft x 66.7 ft (ft²)
Weight	37 kg (82 lbs)
Packaging	25 rolls per pallet
Storage	Store upright in dry conditions below 135°C (95°F)

Ancillary Products (See separate data sheets.)

Bituthene WP-3000	18.9 L (5 gal) pail/24 pails per pallet
Bituthene Primer B2	18.9 L (5 gal) pail/48 pails per pallet
Bituthene Liquid Membrane	5.7 L (1.5 gal) pail
Bituthene Deck Prep	15.1 L (4 gal) pail/24 pails per pallet
Bituthene Mastic	18.9 L (5 gal) pail/36 pails per pallet
	0.9 L (30 oz) tube/12 tubes per carton

Physical Properties for Bituthene 5000 Waterproofing Membrane

Property	Test Method	Typical Value
Thickness	ASTM D 3767	1.7 mm (0.065 in.) nomial
Tensile Strength	ASTM D 882	13 kN/m (75 lbs/in.) 7928 kPa (1,150 lbs/in²)
Elongation	ASTM D 882	50% minimum
Puncture Resistance, Mesh	ASTM E 154	890 N (200 lbs)
Flexibility, 180° bend over 6 mm (0,25 in.) mandrel at -4°C (25°F)	ASTM D 1970	Unaffected
Crack Cycling at -4°C (25°F), 100 Cycles	ASTM C 836	Unaffected
Permeance	ASTM E 96	58 ng/m²sPa (1.0 perms)
Peel Adhesion	ASTM D 903	880 N/m (5 lbs/in.)

affect on the rate of cooling. The minimum recommended temperature at compaction of asphaltic concrete over Bituthene 5000 is 135°C (275°F). Temperatures lower than this may make compaction difficult and jeopardize proper formationof the mat.

Mat thickness is the single most important factor influencing the rate at which the mix cools. It is very difficult to properly compact thin in cool weather because of the rapid loss of heat from the mat. When this occurs, the mats are susceptible to premature failure due to the inability to properly densify the mix before it cools below the minimum compaction temperature. Asphaltic concrete should be placed at thickness greater than 50 mm (2 in.) during cool temperatures.

Air and substrate temperatures have a significant impact on the rate of cooling of the asphaltic concrete mix. Typically, more heat flows from the asphaltic concrete mat into the concrete base than up into the air. Therefore, substrate (concrete deck) temperature has more impact on the time available to compact the mat than air temperature.

Wind has a greater impact on the surface of the mat than on the internal temperature of the mix and can cause the surface to cool so rapidly that a crust will form. Surface crust must be broken by the rollers before the actual compaction process can begin.

The best installation practice to minimize potential compaction problems is to increase the thickness of the mat. Thin mats cool so quickly even under optimum environmental and site conditions, that proper compaction is very difficult. To be certain of proper compaction, and for installation during the spring and fall the minimum mat thickness after compaction should be 50 mm (2 in.).

For Technical Assistance call us toll free at 866-333-3SBM (3726).

web Visit our web site at www.graceconstruction.com

printed on recycled paper

W. R. Grace & Co. - Conn. 62 Whittemore Avenue Cambridge, MA 02140

Bituthene and Bituthene Deck Prep are registered trademarks of W. R. Grace & Co. - Conn.

We hope the information here will be helpful. It is based on data and knowledge considered to be true and accurate and is offered for the users' consideration, investigation and verification, but we do not warrant the results to be obtained. Please read all statements, recommendations or suggestions in conjunction with our conditions of sale, which apply to all goods supplied by us. No statement, recommendation or suggestion is intended for any use which would infringe any patent or copyright. W. R. Grace & Co. - Conn., 62 Whittemore Avenue, Cambridge, MA 02140. In Canada, Grace Canada, Inc., 294 Clements Road, West, Ajax, Ontario, Canada L1S 3C6.

These products may be covered by patents or patents pending. Copyright 2002. W. R. Grace & Co. - Conn. BIT-275A Printed in USA 12/02 EPD/L/2M

GRACE Construction Products

Materials Engineering Unit

241 Erie Street, Room 234
Jersey City, NJ 07310
Tel: 201-216-2952 **Fax:** 201-216-2949

THE PORT AUTHORITY OF NY & NJ

TRANSMITTAL
No. 00043

PROJECT: WO12 South Wing Emerg. Stair Repairs

DATE: 10/30/2009

TO: VRH Construction Corp.
c/o Port Authority of NY & NJ
625 Eight Ave. 2nd Flr. North Bldg
New York, NY 10018

CONTRACT: PABT-200.200 WO12

ATTN: **Anthony Carnabuci**

	STATUS	LEGEND:
☐ Shop Drawings	Approved (APP)	New Item (NEW)
☑ Letter	Approved as Corrected (AAC)	Not Approved (NA)
☐ Prints	Approved as Noted (AAN)	Not Reviewed (NR)
☐ Change Order	For Record Only (FRO)	Review With Comments (RWC)
☐ Plans	For Your Information (FYI)	Review With No Comments (RWNC)
☐ Samples	Incomplete (INC)	Superseded (SUPS)
☐ Specifications		
☑ Other: Made from Submittal	☐ Attached ☐ Separate Cover Via: Mail	
Review and Comment		

SUBMITTAL	REV.	DATE	DESCRIPTION	Remark	STATUS
04212-0004	R000	10/28/2009	Desc: Nelson Testing Laboratories; Test Report dated 1/20/09 for "Physical Analysis of Clay Face Brick"; the brick meets ASTM C216 and ASTM C64 standards requirement.	#1	AAN

Remarks: 1. Brick shall match existing. Brick sample shall be submitted to the Architect for color, texture and size review and approval.

Approvals shall not relieve the Contractor of any responsibility as required by the Contract or waive any further authority of the Engineer or modify or waive any provision of the subject Contract with regard to this material(s) or its approval.

Material(s), which do not conform to the contract documents, will be subject to rejection at the job site by the Resident Engineer.

If you have any questions, please call Carlos Perez of my staff at (201) 216-2589. Our fax number is (201) 216-2949

CC: P. Salvatore w/att., A. Kaprielian w/att., C. Perez, MEU file

Signed:
Casimir Bognacki, P.E.
Chief of Materials Engineering

Expedition ®

1/5

LETTER OF TRANSMITTAL

CP
10/7/09

Action Key

1 For your records and/or use
2 For price quotation
3 For approval
4 Approved/Reviewed
5 Approved as noted: Re-submission not required
6 Approved as noted: Revise and re-submit
7 Rejected: Re-submit per contract documents

VRH
CONSTRUCTION CORP.
General Contractors & Construction Managers

To	The Port Authority of NY & NJ	Transmittal No.	00049
	Two Gateway Center	Job No.	2030WO12
	15th Floor	Project	PANY/NJ-bt-200.200 WO 12
	Newark, NJ 07102		South Wing Emergency Stair Repairs
Attention	Ka Kei Chan		
Phone No. 973-792-4629	Fax 973-792-4602		

We are sending you herewith the following: [x] Drawings [x] Shop Drawings [ ] Samples [ ] Specifications [x] Other:

Via: [x] Attached [ ] Separate Cover Via: Mail

Quantity	Drawing/Submittal No.	Description	Action
9	04212-004	Dwg: Title: Brick Masonry Product Data Sheet Desc: Brick Masonry Product Data Ssheet	1

Remarks:

cc: P. Salvatore; A. Kaprielian/PANYNJ

Signed: [signature]

By: Anthony F. Cantabrei

Date: [illegible]

625 Eighth Avenue
2nd Flr, North Building
New York, NY 10018

Phone
212-629-6187
Fax
212-629-9243

VRH Construction Corp.

625 Eighth Avenue
2nd Flr, North Building
New York, NY 10018

Phone: 212-629-6187
Fax: 212-629-9243

SUBMITTAL NO. 04212-004
PACKAGE NO: 04212

TITLE: Brick Masonry Product Data Sheet
PROJECT: PANY/NJ-bt-200.200 WO 12
DRAWING:
STATUS: 3
BIC: PANYNJ

REQUIRED START: 10/6/2009
REQUIRED FINISH: 10/20/2009
DAYS HELD: 0
DAYS ELAPSED: 0
DAYS OVERDUE: -14

RECEIVED FROM		SENT TO		RETURNED BY		FORWARDED TO	
TG	JB	PANYNJ	KC	PANYNJ	KC	TG	JB

Revision No.	Description / Remarks	Received	Sent	Returned	Forwarded	Status	Sepias	Prints	Drawing Date	Held	Elapsed
000	Brick Masonry Product Data Ssheet	10/6/2009	10/6/2009			3	0	0		0	0

NELSON TESTING LABORATORIES

Construction Materials
1210 REMINGTON ROAD
SCHAUMBURG, ILLINOIS 60173 USA
Phone (847) 882-1146 Fax (847) 882-1148

www.nelsontesting.com

Endicott Clay Products Co.
P.O. Box 17
Fairbury, Nebraska 68352

January 20, 2009

Attn: Mr. Gary S. Davis

REPORT OF TESTS

SUBJECT:	**Physical Analysis of Clay Face Brick**
PROJECT:	**Endicott Testing Program 2008 – Medium Ironspot #46 Modular**
SPECIFICATION:	ASTM C 216, "Specification for Facing Brick."
TEST METHOD:	ASTM C 67, "Test Methods for Sampling and Testing Brick and Structural Clay Tile."
NTL PROJECT #:	1123-08 (10A)

TEST RESULTS

Source	**Endicott Clay Products Co. – Medium Ironspot #46 Modular**
Size	Length – 7.625" (19.37 cm); Width – 3.625" (9.21 cm); Height – 2.25" (5.72 cm)
Date of Tests:	August 2008

Unit No.	1	2	3	4	5	AVG
Absorption (%)						
24 hour	5.62	5.04	5.99	4.93	5.01	**5.32**
5 hour boil	7.81	6.55	7.68	6.75	6.68	**6.31**
Saturation Coefficient	0.72	0.77	0.78	0.73	0.75	**0.75**
Initial Rate of Absorption	0.8	1.1	1.6	1.5	1.1	**1.2**
Comp. Strength (PSI)	12,929	12,679	13,055	12,871	12,798	**12,866**
Efflorescence	none	none	none	none	none	**none**
Freeze-Thaw @ 100 cycles	pass	pass	pass	pass	pass	**pass**

**These units comply with ASTM C 216, "Specification for Facing Brick", Grade SW.*

Respectfully submitted,
NELSON TESTING LABORATORIES

Mark R. Nelson
President

04212-004
200.200 W.O. 12

Materials Engineering Unit

241 Erie Street, Room 234
Jersey City, NJ 07310
Tel: 201-216-2952 Fax: 201-216-2949

THE PORT AUTHORITY OF NY & NJ

TRANSMITTAL
No. 00045

PROJECT: WO12 South Wing Emerg. Stair Repairs

DATE: 11/5/2009

TO: VRH Construction Corp.
c/o Port Authority of NY & NJ
625 Eight Ave. 2nd Flr. North Bldg
New York, NY 10018

CONTRACT: PABT-200.200 WO12

ATTN: **Anthony Carnabuci**

		STATUS LEGEND:
☐ Shop Drawings	Approved (APP)	New Item (NEW)
☑ Letter	Approved as Corrected (AAC)	Not Approved (NA)
☐ Prints	Approved as Noted (AAN)	Not Reviewed (NR)
☐ Change Order	For Record Only (FRO)	Review With Comments (RWC)
☐ Plans	For Your Information (FYI)	Review With No Comments (RWNC)
☐ Samples	Incomplete (INC)	Superseded (SUPS)
☐ Specifications		
☑ Other: Made From Submittal	☐ Attached ☐ Separate Cover Via:	
	Review and Comment	

SUBMITTAL	REV.	DATE	DESCRIPTION	Remark	STATUS
04212-0005A	R000	11/3/2009	Desc: Endicott Clay Products, Co.; Product Letter dated 10/15/09 for (3-5/8x2-¼"x11-5/8"Clay Face Brick); it states that the bricks are manufactured to meet the requirements of ASTM C216, Grade SW, Type FBS.	#1	AAN
04212-0005B	R000	11/3/2009	Desc: Nelson Testing Laboratories; Test Report dated 1/20/09 for "Physical Analysis of Clay Face Brick"; the brick meets ASTM C216 and ASTM C64 standards requirement.	#1	AAN

Remarks: 1. Brick shall match existing. Brick sample shall be submitted to the Architect for color, texture and size review and approval.

Approvals shall not relieve the Contractor of any responsibility as required by the Contract or waive any further authority of the Engineer or modify or waive any provision of the subject Contract with regard to this material(s) or its approval.

Material(s), which do not conform to the contract documents, will be subject to rejection at the job site by the Resident Engineer.

If you have any questions, please call Carlos Perez of my staff at (201) 216-2589. Our fax number is (201) 216-2949

CC: P. Salvatore w/att., A. Kaprielian w/att., C. Perez, MF

Signed:
Casimir Bognacki, P.E.
Chief of Materials Engineering

Expedition ®

CL PW

LETTER OF TRANSMITTAL

VRH
CONSTRUCTION CORP.
General Contractors & Construction Managers

Action Key
1 For your records and/or use
2 For price quotation
3 For approval
4 Approved/Reviewed
5 Approved as noted: Re-submission not required
6 Approved as noted: Revise and re-submit
7 Rejected: Re-submit per contract documents

To	The Port Authority of NY & NJ	Transmittal No.	00055
	Two Gateway Center	Job No.	2030WO12
	15th Floor	Project	PANY/NJ-bt-200.200 WO 12
	Newark, NJ 07102		South Wing Emergency Stair Repairs
Attention	Ka Kei Chan		
Phone No.	973-792-4629 Fax 973-792-4602		

We are sending you herewith the following: ☒ Drawings ☒ Shop Drawings ☐ Samples ☐ Specifications ☒ Other:

Via: ☒ Attached ☐ Separate Cover Via Mail

Quantity	Drawing/Submittal No.	Description	Action
9	04212-005 A & B	Dwg: Title: Endicott Test Report Desc: Endicott Test Report	3
9	04100-001	Dwg: Title: Lafarge Eaglebond Portland & Lime Desc: Lafarge Eaglebond Portland & Lime	3

↳ Not include it in this pkg

Rec 10/20/09

Remarks:

cc: P. Salvatore; A. Kaprielian/PANYNJ

Signed Anthony Cannabuci

By Anthony J. Cannabuci

Date 10/19/2009

625 Eighth Avenue
2nd Flr, North Building
New York, NY 10018

Phone
212-629-6187
Fax
212-629-9243

VRH Construction Corp.

625 Eighth Avenue
2nd Flr, North Building
New York, NY 10018

Phone: 212-629-6187
Fax: 212-629-9243

SUBMITTAL NO. 04212-005
PACKAGE NO: 04212

TITLE: Endicott Test Report
PROJECT: PANY/NJ-bt-200.200 WO 12
DRAWING:
STATUS: 3
BIC: PANYNJ

REQUIRED START: 10/19/2009
REQUIRED FINISH: 11/2/2009
DAYS HELD: 0
DAYS ELAPSED: 0
DAYS OVERDUE: -14

RECEIVED FROM		SENT TO		RETURNED BY		FORWARDED TO	
TG	JB	PANYNJ	KC	PANYNJ	KC	TG	JB

Revision No.	Description / Remarks	Received	Sent	Returned	Forwarded	Status	Seplas	Prints	Drawing Date	Held	Elapsed
000	Endicott Test Report	10/19/2009	10/19/2009			3	0	9		0	0

Expedition®

Endicott Clay Products Co

October 15, 2009

Joe Turzilli
Tri-State Brick & Bldg Materials
151 W 25th St., 9th Floor
New York, NY 10001

Dear Joe:

Re: Port Authority
New York, NY

I am writing to advise that the Medium Ironspot #46 Velour Norman Face Brick (3-5/8x2-1/4x11-5/8) we would propose to supply to this project are manufactured to meet the requirements of ASTM C216, Grade SW, Type FBS. These face brick will meet or exceed all requirements and allowances set forth in this industry-accepted specification. The enclosed test report documents the physical properties of this brick.

Sincerely,

Mary Johnson

04212-005
200.200 W.O.12

Mary Johnson
Endicott Clay Products Co.

Enclosure

Cc: justyna@grenadiercorp.com

Post Office Box 17 · Fairbury, Nebraska 68352 · 402/729/3315
FAX 402/729-5804

NELSON TESTING LABORATORIES

Construction Materials
1210 REMINGTON ROAD
SCHAUMBURG, ILLINOIS 60173 USA
Phone (847) 882-1146 Fax (847) 882-1148

www.nelsontesting.com

Endicott Clay Products Co.
P.O. Box 17
Fairbury, Nebraska 68352

January 20, 2009

Attn: Mr. Gary S. Davis

REPORT OF TESTS

SUBJECT: **Physical Analysis of Clay Face Brick**

PROJECT: **Endicott Testing Program 2008 – Medium Ironspot #46 Modular**

SPECIFICATION: ASTM C 216, "Specification for Facing Brick."

TEST METHOD: ASTM C 67, "Test Methods for Sampling and Testing Brick and Structural Clay Tile."

NTL PROJECT #: 1123-08 (10A)

TEST RESULTS

Source: **Endicott Clay Products Co. – Medium Ironspot #46 Modular**

Size: Length – 7.625" (19.37 cm); Width – 3.625" (9.21 cm); Height – 2.25" (5.72 cm)

Date of Tests: August 2008

Unit No.	1	2	3	4	5	AVG
Absorption (%)						
24 hour	5.62	5.04	5.99	4.93	5.01	5.32
5 hour boil	7.81	6.55	7.68	6.75	6.68	6.31
Saturation Coefficient	0.72	0.77	0.78	0.73	0.75	0.75
Initial Rate of Absorption	0.8	1.1	1.6	1.5	1.1	1.2
Comp. Strength (PSI)	12,929	12,679	13,055	12,871	12,796	12,866
Efflorescence	none	none	none	none	none	none
Freeze-Thaw @ 100 cycles	pass	pass	pass	pass	pass	pass

**These units comply with ASTM C 216, "Specification for Facing Brick", Grade SW.*

Respectfully submitted,

NELSON TESTING LABORATORIES

Mark R. Nelson
Principal

Material Safety Data Sheet

Endicott Clay Products Co., Inc.
57120 707th Road
Endicott, NE 68350

Phone: (402) 729-3315

Date Completed: 08/30/2000
Latest Revision: 10/05/2007

SECTION I – PRODUCT IDENTIFICATION

Product Name: Brick and Tile

Chemical Family: Predominately Aluminum Silicates
Formula: Mixture

SECTION II – HAZARDOUS INGREDIENTS

Ingredients	CAS #	% Weight	Exposure Limits OSHA PEL mg/m³	Exposure Limits ACGIH TLV mg/m³
Aluminum Silicates	Various	50 – 85	15	10
Quartz	14808-60-7	20 – 40	10 / %SiO_2 + 2 (respirable)	0.025 (respirable)
Iron Compounds	Various	2 – 8	Not available	Not available
Titanium Compounds	Various	2 – 5	Not available	Not available
Magnesium Compounds	Various	0 – 1	Not available	Not available
Calcium Compounds	Various	0 – 1	Not available	Not available
Barium Compounds	Various	0 – 3	Not available	Not available
Iron Chromite	1308-31-2	0 – 3	1	0.05 as (Cr)
Manganese Compounds	Various	0 – 4	Not available	Not available

The above chemistries are provided for industrial hygiene and environmental purposes and are not intended to represent product specifications. This information has been compiled from data believed to be reliable. Elements such as aluminum, arsenic, boron, cobalt, copper, lead, molybdenum, nickel, tin, titanium, vanadium, and zirconium may be present in trace amounts. Brick products as shipped do not present an exposure hazard.

SECTION III – PHYSICAL/CHEMICAL CHARACTERISTICS

Boiling Point: NA
Melting Point: NA
Specific Gravity: 2.6
Vapor Pressure: NA
Vapor Density: NA
Solubility in Water: Negligible
Appearance and Odor: Granular solid, essentially odorless. Bricks come in a wide range of colors.

SECTION IV – FIRE AND EXPLOSION HAZARD DATA

Bricks as shipped do not pose a fire or explosion hazard.

SECTION V – REACTIVITY

Bricks as shipped are not reactive

SECTION VI – HEALTH HAZARD DATA

Bricks as shipped do not present an inhalation, ingestion or contact hazard. However, operations such as sawing and grinding may result in the following effects.

ACUTE EFFECTS OF OVEREXPOSURE:
Eye: May cause irritation by abrasion with dust or chips.
Skin: Brick dust or chips may cause allergic reactions in hypersensitive individuals; May cause cuts and skin abrasions.
Inhalation: Brick dust or chips may cause congestion and irritation in nasal and respiratory passages.
Ingestion: No known acute effects.

CHRONIC EFFECTS OF OVEREXPOSURE:

Excessive exposures to respirable particulates (dust) over an extended period of time may result in the development of pulmonary diseases such as silicosis.

SECTION VI – HEALTH HAZARD DATA (continued)

CARCINOGENICITY:

The following carcinogenicity classifications for crystalline silica have been established by the following agencies:

OSHA: Not regulated as a carcinogen
IARC: Group 1 carcinogenic in humans
NIOSH: Carcinogen, with no further categorization
NTP: Known carcinogen

WARNING: Brick and tile dust contains crystalline silica, a chemical that has been determined by the agencies listed above to cause cancer. Inhalation of brick and tile dust above established or recommended exposure levels should be avoided by use of wet sawing or shaping and/or use of a NIOSH and/or MSHA approved respirator. Always stack and store bricks in a stable manner to avoid falling hazards.

SECTION VII – PRECAUTIONS FOR SAFE HANDLING AND USE

Ventilation:	Provide adequate ventilation to maintain exposures below the OSHA PEL and ACGIH TLV for quartz and other substances.
Respiratory Protection:	For airborne concentration exceeding the OSHA PEL or ACGIH TLV use a NIOSH and/or MSHA approved respirator.
Other Protective Equipment:	Eye and Face: Face shields should be used when sawing brick. Skin: Use gloves and or protective clothing if abrasions or allergic reactions are experienced. Other: Use of steel toe shoes is recommended when handling brick.
Other controls:	Use of wet sawing methods is recommended anytime that bricks must be cut.

SECTION VIII – FIRST AID AND MEDICAL

Inhalation:	Remove from exposure to airborne particulates. Consult a physician if breathing does not return to normal.
Skin:	Wash with soap and water. If an allergic reaction causes a rash that does not heal with in a few days consult a physician. Treat abrasions as any other scrape or cut with disinfectants and bandages.
Eye:	Flush with running water. Obtain medical assistance if irritation continues.
Medical Conditions Aggravated by Exposure:	Excessive dust exposure may aggravate any existing respiratory disorders or diseases. Possible complications or allergies resulting in irritation to skin, eyes, and respiratory tract may occur from excessive exposure to dusts.

SECTION IX – OTHER REGULATIONS

RCRA:	Brick in its solid form is typically considered a non-hazardous waste for disposal, but local regulation may vary, therefore all waste must be disposed/recycled/reclaimed in accordance with federal, state, and local environmental control regulations. Water containing brick solids, such as from wet sawing operations, should also be disposed of in accordance with federal, state and local environmental regulation. Brick waste should not be used as a blasting agent.
EPCRA Section 311/312:	Bricks as shipped are not a Section 311/312 reportable product.
EPCRA Section 313:	Bricks as shipped are not subject to the Section 313, Toxic Chemical Release Inventory reporting requirements.
DOT:	Bricks as shipped are not hazardous materials per DOT regulations.

SECTION X – OTHER INFORMATION

Endicott Clay Products Company, Inc. considers our product an "article" as defined in 30 CFR 1200(b)(g)(iv) and 40 CFR 372.38. As an article, an MSDS is not required and the product is exempt from all other requirements of the hazard communication standard. OSHA requires an MSDS for brick because it is occasionally dry sawed. We recommend only wet sawing of brick.

This MSDS was prepared with information believed accurate at the time of preparation and was prepared and provided in good faith. However, Endicott Clay Products Company, Inc. assumes no responsibility as to the accuracy or suitability of such information and no warranty expressed or implied is made.

Materials Engineering Unit

241 Erie Street, Room 234
Jersey City, NJ 07310
Tel: 201-216-2952 **Fax:** 201-216-2949

THE PORT AUTHORITY OF NY & NJ

TRANSMITTAL

No. 00044

PROJECT: WO12 South Wing Emerg. Stair Repairs

DATE: 11/5/2009

TO: VRH Construction Corp.
c/o Port Authority of NY & NJ
625 Eight Ave. 2nd Flr. North Bldg
New York, NY 10018

CONTRACT: PABT-200.200 WO12

ATTN: **Anthony Carnabuci**

	STATUS LEGEND:	
☐ Shop Drawings	Approved (APP)	New Item (NEW)
☑ Letter	Approved as Corrected (AAC)	Not Approved (NA)
☐ Prints	Approved as Noted (AAN)	Not Reviewed (NR)
☐ Change Order	For Record Only (FRO)	Review With Comments (RWC)
☐ Plans	For Your Information (FYI)	Review With No Comments (RWNC)
☐ Samples	Incomplete (INC)	Superseded (SUPS)
☐ Specifications		
☑ Other: Made From Submittal	☐ Attached ☐ Separate Cover Via:	
	Review and Comment	

SUBMITTAL	REV.	DATE	DESCRIPTION	Remark	STATUS
04100-0002A	R000	11/3/2009	Desc: Geo. Schofield Co., Inc.; Test Report for "107 Mason Sand Gradation".	#1	NA
04100-0002B	R000	11/3/2009	Desc: Lafarge North America; Catalog Cut Sheet for "Lafarge Eaglebond Portland and Lime"; a controlled blend of Portland cement and type S hydrated lime; Contract Dwg. No. A214, Detail at Base of 7th Floor Bulkhead and Opening for Exhaust Fan.	#2	AAN
04100-0002C	R000	11/3/2009	Desc: Lafarge North America; Material Safety Data Sheet for "Lafarge Masonry and Mortar Cement".		FRO

Remarks: 1. The submitted gradation is not approved because it does not meet the ASTM C144 gradation requirements. Sieve # 30 shows 87% passing but the required % passing according to ASTM C144 shall be between 40 and 75 percent. Also, ASTM C144, paragraph 4.2 states that the aggregate shall not have more than 50% retained between any two consecutive sieves but the submitted gradation has 56% retained between sieves # 30 and #50. Please resubmit a gradation meeting the ASTM C144 requirements.
2. The submitted mortar is approved for type S and shall be mix with mason sand meeting ASTM C144 (see remark # 1) and clean, potable water.

Approvals shall not relieve the Contractor of any responsibility as required by the Contract or waive any further authority of the Engineer or modify or waive any provision of the subject Contract with regard to this material(s) or its approval.

Material(s), which do not conform to the contract documents, will be subject to rejection at the job site by the Resident Engineer.

If you have any questions, please call Carlos Perez of my staff at (201) 216-2589. Our fax number is (201) 216-2949

CC: P. Salvatore w/att., A. Kaprielian w/att., C. Perez, MF

Signed:
Casimir Bognacki, P.E.
Chief of Materials Engineering

Expedition ®

VRH Construction Corp.

625 Eighth Avenue
2nd Flr, North Building
New York, NY 10018

Phone: 212-629-6187
Fax: 212-629-9243

SUBMITTAL NO. 04100-002
PACKAGE NO: 04100

TITLE: Mason Sand
PROJECT: PANY/NJ-bt-200.200 WO 12

REQUIRED START: 10/19/2009
REQUIRED FINISH: 11/2/2009

DRAWING:
STATUS: 3
BIC: PANYNJ

DAYS HELD: 0
DAYS ELAPSED: 0
DAYS OVERDUE: -14

RECEIVED FROM		SENT TO		RETURNED BY		FORWARDED TO	
TG	JB	PANYNJ	KC	PANYNJ	KC	TG	JB

Revision No.	Description / Remarks	Received	Sent	Returned	Forwarded	Status	Sepias	Prints	Drawing Date	Held	Elapsed
000	Mason Sand	10/19/2009	10/19/2009			3	0	9		0	0

Expedition®

VRH Construction Corp.

625 Eighth Avenue
2nd Flr, North Building
New York, NY 10018

Phone: 212-629-6187
Fax: 212-629-9243

SUBMITTAL
NO. 04100-001
PACKAGE NO: 04100

TITLE: Lafarge Eaglebond Portland & Lime
PROJECT: PANY/NJ-bt-200.200 WO 12
DRAWING:
STATUS: 3
BIC: PANYNJ

REQUIRED START: 10/19/2009
REQUIRED FINISH: 11/2/2009
DAYS HELD: 0
DAYS ELAPSED: 0
DAYS OVERDUE: -14

RECEIVED FROM	SENT TO	RETURNED BY	FORWARDED TO
TG	JB	PANYNJ	KC	PANYNJ	KC	TG	JB

Revision No.	Description / Remarks	Received	Sent	Returned	Forwarded	Status	Sepias	Prints	Drawing Date	Held	Elapsed
000	Lafarge Eaglebond Portland & Lime	10/19/2009	10/19/2009			3	0	9		0	0

JAN

Since 1923
MATERIALS FROM THE EARTH'S CRUST
Geo. Schofield Co., Inc.
P.O. BOX 110, BOUND BROOK, NEW JERSEY 08805
TEL: (732) 356-0858 FAX: (732) 356-1137
Website: http://www.geoschofield.com
Email: geosch@geoschofield.com

04100-002
200.200 W.O. 12

107 MASON SAND GRADATION

Sieve Size	Wt. Ret.	% Ret.	% Passing	ASTM C-144 Spec
#4				100
#8				95-100
#16	5.2	1	99 ✓	70-100
#30	70.0	13	87 X	40-75
#50	358.5	69	31 ✓	10-35
#100	501.9	97	3 ✓	2-15
#200	519.1	100	0 ✓	0-5
PAN	519.9			

less than 50% retained

FINENESS MODULES 180

Specialized Aggregates, Sands and Related Products . . .

for
- Arch. Precast Conc.
- Athletic Fields
- Golf Courses
- Landscaping
- Plastering
- Pools
- Roofing
- Wall Surfacing
- SUPRGRO - Mfr'd Topsoil

cl

LETTER OF TRANSMITTAL

Action Key
1 For your records and/or use
2 For price quotation
3 For approval
4 Approved/Reviewed
5 Approved as noted: Re-submission not required
6 Approved as noted: Revise and re-submit
7 Rejected: Re-submit per contract documents

VRH CONSTRUCTION CORP.
General Contractors & Construction Managers

To	The Port Authority of NY & NJ	Transmittal No.	00056
	Two Gateway Center	Job No.	2030WO12
	15th Floor	Project	PANY/NJ-bt-200.200 WO 12
	Newark, NJ 07102		South Wing Emergency Stair Repairs
Attention	Ka Kei Chan		
Phone No.	973-792-4629 Fax 973-792-4602		

We are sending you herewith the followin ☒ Drawings ☒ Shop Drawings ☐ Samples ☐ Specifications ☒ Other:

Via: ☒ Attached ☐ Separate Cover Via Mail

Quantity	Drawing/Submittal No.	Description	Action
9	04100-002 A,B,C	Dwg: Title: Mason Sand Desc: Mason Sand	3

N A

RECEIVED OCT 2 0 2009

Remarks:	
cc:	P. Salvatore; A. Kaprielian/PANYNJ
Signed	
By	Anthony J. Carnabucl
Date	10/19/2009

625 Eighth Avenue
2nd Flr, North Building
New York, NY 10018

Phone
212-629-6187
Fax
212-629-9243

THE GRENADIER CORPORATION
1590 EAST 233RD STREET
BRONX, NEW YORK 10466
(718) 324-3700 FAX: (718) 994-6477

LETTER OF TRANSMITTAL

TO:	**Mr. Joe Pointek**	**October 16, 2009**
	VRH Construction Corp.	
RE:	**Port Authority Bus Terminal**	
	Work Order # 12	

WE ARE SENDING YOU ☒ ***ATTACHED*** ☐ ***UNDER SEPARATE COVER*** **VIA** **MAIL** **THE** ***FOLLOWING:***

☐ ***SAMPLES*** ☐ ***SUBMITTALS*** ☐ ***CUTS*** ☐ ***MSDS***

COPIES	*DATE*	*DESCRIPTION*
1	10/16/09	Lafarge Eaglebond Portland and Lime (Data Sheet & MSDS)
1	10/16/09	Mason Sand

04100-001
200.200 W.O. 12

TRANSMITTED:

☒ ***FOR YOUR USE*** ☐ ***AS REQUESTED*** ☐ ***FOR REVIEW AND COMMENT***

REMARKS:

SIGNED: Justyna Berebecka

Product Data Sheet

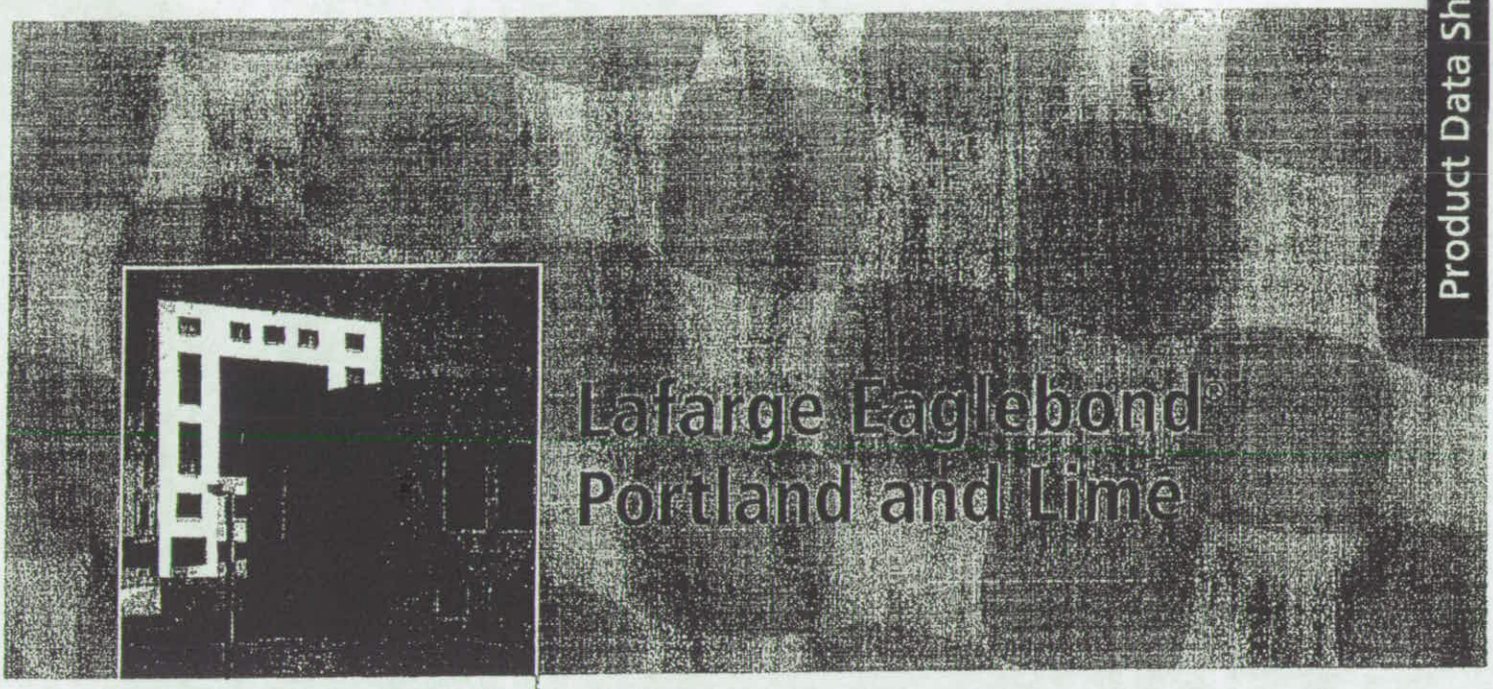

Lafarge Eaglebond® Portland and Lime

LAFARGE

Eaglebond is a controlled blend of portland cement and Type S hydrated lime. Eaglebond is available in natural grey. However, in case your project calls for a special custom-blended shade, we'll be glad to develop one. Lafarge Eaglebond is available in Types N, S and M formulations and exceeds all applicable ASTM, IBC and IRC specifications.

LAFARGE

EAGLEBOND®
Portland and Lime

HIGH STRENGTH TYPE S

LAFARGE EAGLEBOND® PORTLAND AND LIME

Product Data Sheet

The following is a general guide for selection of mortar type. Other factors such as type and absorption of masonry units, climate and exposure, applicable building codes and engineering requirements should also be considered.

Recommended Guide For Selection Of Mortar Type

Building Segment	Type
Exterior	
Above grade	
Load-bearing	S
Non-load-bearing	N
Parapet wall	S
Exterior	
At or below grade	S or M
Interior	
Load-bearing	S
Non-load-bearing	N

Colors
Lafarge Eaglebond is available in natural grey. Custom colors are available on request.

Precautions
Direct contact with wet cement should be avoided. If contact occurs, the skin should be washed with water as soon as possible. Exposure can cause serious, potentially irreversible tissue destruction in the form of chemical (caustic) burns. If cement gets into the eyes, immediately rinse thoroughly with water and seek medical attention. For more information, reference the applicable Lafarge Material Safety Data Sheet (MSDS). The MSDS should be consulted prior to use of this product and is available upon request and online at www.lafarge-na.com.

Limited Warranty
Lafarge warrants that Lafarge Eaglebond meets the requirements of ASTM C 150 for portland cement and ASTM C 207 for Type S hydrated lime. Lafarge makes no other warranty, whether of merchantability or fitness for a particular purpose, with respect to Eaglebond. Having no control over its use, Lafarge will not guarantee finished work in which Eaglebond is used.

Product Name
Lafarge Eaglebond®:
Types N, S and M

Manufacturer
Lafarge Building Materials Inc.
12950 Worldgate Drive
Suite 500
Herndon, Virginia 20170
www.lafarge-na.com

Product Description
Lafarge Eaglebond is a controlled blend of portland cement and Type S hydrated lime. The portland cement complies with ASTM specification C 150 and the Type S hydrated lime complies with ASTM specification C 207.

Technical Data
Applicable Standards: Lafarge Eaglebond conforms to the proportion requirements of ASTM C 270, Table I and exceeds the property requirements of ASTM specification C 270, provided the sand used conforms to ASTM specification C 144.

Physical Properties
Lafarge Eaglebond portland and lime provides an excellent level of performance in the functional areas of workability, compressive and flexural strength, water permeance, durability and appearance that are all so important to the designer, owner and mason.

Limitations
Lafarge Eaglebond is designed to be mixed with mason's sand and clean, potable water to produce an ASTM C 270 mortar for unit masonry.

Contact your Lafarge Office for specific product information, availability and ordering.

Lakes and Seaway Business Unit
Bingham Farms, Michigan
Phone: 248-594-1991

River Business Unit
Lee's Summit, Missouri
Phone: 816-251-2100

U.S. East Business Unit
Alpharetta, Georgia
Phone: 678-746-2000

PDSEPLE 1/07

Printed on recycled paper

LAFARGE NORTH AMERICA

CEMENT

Material Safety Data Sheet

Section 1: PRODUCT AND COMPANY INFORMATION

Product Name(s): Lafarge Masonry and Mortar Cement

Product Identifiers: Cement, Masonry Cement, Mortar Cement, Mortar Mix, Parging Mix, U.S. Cement® Custom Color Masonry Cement, Eaglebond ™, Superbond, Types N, S, or M, MCN or MCS Cement, Trinity® White, Magnolia® Mason's Mix, Magnolia® Buff, Dark and Ultra Dark Masonry Cement, and Premium Stucco Mix

Manufacturer:
Lafarge North America Inc.
12950 Worldgate Drive, Suite 500
Herndon, VA 20170

Information Telephone Number:
703-480-3600 (9am to 5pm EST)

Emergency Telephone Number:
1-800-451-8346 (3E Hotline)

Product Use: Cement is used as a binder in concrete and mortars that are widely used in construction.

Note: This MSDS covers many types of Masonry and Mortar Cement. Individual composition of hazardous constituents will vary between types of cement.

Section 2: COMPOSITION/INFORMATION ON INGREDIENTS

Component	Percent (By Weight)	CAS Number	OSHA PEL -TWA (mg/m^3)	ACGIH TLV-TWA (mg/m^3)	LD_{50} (mouse, intraperitoneal)	LC_{50}
Portland Cement*	30-75	65997-15-1	15 (T); 5 (R)	10 (R)	NA	NA
Calcium Carbonate*	20-50	1317-65-3	15 (T); 5 (R)	10 (T)	NA	NA
Calcium Hydroxide	0-20	1305-62-1	15 (T)	10(T)	NA	NA
Crystalline Silica	< 10	14808-60-7	[(10) / (%SiO_2+2)] (R); [(30) / (%SiO_2+2)] (T)	0.025 (R)	NA	NA
Calcium Sulfate*	5-10	13397-24-5	15 (T); 5 (R)	10 (T)	NA	NA
Magnesium Oxide	0-4	1309-48-4	15 (T)	10 (T)	NA	NA
Calcium Oxide	0-1	1305-78-8	5 (T)	2 (T)	3059 mg/kg	NA

Note: Exposure limits for components noted with an * contain no asbestos and <1% crystalline silica

Cement is made from materials mined from the earth and is processed using energy provided by fuels. Trace amounts of chemicals may be detected during chemical analysis. For example, cement may contain trace amounts magnesium hydroxide, potassium and sodium sulfate compounds, chromium compounds, nickel compounds, and other trace compounds.

Section 3: HAZARD IDENTIFICATION

DANGER

Corrosive - Causes severe burns.
Toxic - Harmful by inhalation.
(Contains crystalline silica)

Use proper engineering controls, work practices, and personal protective equipment to prevent exposure to wet or dry product.

Read MSDS for details.

Respiratory Protection

Eye Protection

Waterproof Gloves

Waterproof Boots

Section 3: HAZARD IDENTIFICATION (continued)

Emergency Overview: Cement is a solid, grey, buff, or white odorless powder. It is not combustible or explosive. A single, short-term exposure to the dry powder presents little or no hazard. Exposure of sufficient duration to wet cement, or to dry cement on moist areas of the body, can cause serious, potentially irreversible tissue (skin, eye, respiratory tract) damage due to chemical (caustic) burns, including third degree burns.

Potential Health Effects:

Eye Contact: Airborne dust may cause immediate or delayed irritation or inflammation. Eye contact with large amounts of dry powder or with wet cement can cause moderate eye irritation, chemical burns and blindness. Eye exposures require immediate first aid and medical attention to prevent significant damage to the eye.

Skin Contact: Cement may cause dry skin, discomfort, irritation, severe burns, and dermatitis.

Burns: Exposure of sufficient duration to wet cement, or to dry cement on moist areas of the body, can cause serious, potentially irreversible damage to skin, eye, respiratory and digestive tracts due to chemical (caustic) burns, including third degree burns. A skin exposure may be hazardous even if there is no pain or discomfort.

Dermatitis: Cement is capable of causing dermatitis by irritation and allergy. Skin affected by dermatitis may include symptoms such as, redness, itching, rash, scaling, and cracking.

Irritant dermatitis is caused by the physical properties of cement including alkalinity and abrasion.

Allergic contact dermatitis is caused by sensitization to hexavalent chromium (chromate) present in cement. The reaction can range from a mild rash to severe skin ulcers. Persons already sensitized may react to the first contact with cement. Others may develop allergic dermatitis after years of repeated contact with cement.

Inhalation (acute): Breathing dust may cause nose, throat or lung irritation, including choking, depending on the degree of exposure. Inhalation of high levels of dust can cause chemical burns to the nose, throat and lungs.

Inhalation (chronic): Risk of injury depends on duration and level of exposure.

Silicosis: This product contains crystalline silica. Prolonged or repeated inhalation of respirable crystalline silica from this product can cause silicosis, a seriously disabling and fatal lung disease. See Note to Physicians in Section 4 for further information.

Carcinogenicity: Cement is not listed as a carcinogen by IARC or NTP; however, cement contains trace amounts of crystalline silica and hexavalent chromium which are classified by IARC and NTP as known human carcinogens.

Autoimmune Disease: Some studies show that exposure to respirable crystalline silica (without silicosis) or that the disease silicosis may be associated with the increased incidence of several autoimmune disorders such as scleroderma (thickening of the skin), systemic lupus erythematosus, rheumatoid arthritis and diseases affecting the kidneys.

Tuberculosis: Silicosis increases the risk of tuberculosis.

Renal Disease: Some studies show an increased incidence of chronic kidney disease and end-stage renal disease in workers exposed to respirable crystalline silica.

Section 3: HAZARD IDENTIFICATION (continued)

Ingestion: Do not ingest cement. Although ingestion of small quantities of cement is not known to be harmful, large quantities can cause chemical burns in the mouth, throat, stomach, and digestive tract.

Medical Conditions Aggravated by Exposure: Individuals with lung disease (e.g. bronchitis, emphysema, COPD, pulmonary disease) or sensitivity to hexavalent chromium can be aggravated by exposure.

Section 4: FIRST AID MEASURES

Eye Contact: Rinse eyes thoroughly with water for at least 15 minutes, including under lids, to remove all particles. Seek medical attention for abrasions and burns.

Skin Contact: Wash with cool water and a pH neutral soap or a mild skin detergent. Seek medical attention for rash, burns, irritation, dermatitis, and prolonged unprotected exposures to wet cement, cement mixtures or liquids from wet cement.

Inhalation: Move person to fresh air. Seek medical attention for discomfort or if coughing or other symptoms do not subside.

Ingestion: Do not induce vomiting. If conscious, have person drink plenty of water. Seek medical attention or contact poison control center immediately.

Note to Physician: The three types of silicosis include:

- Simple chronic silicosis – which results from long-term exposure (more than 20 years) to low amounts of respirable crystalline silica. Nodules of chronic inflammation and scarring provoked by the respirable crystalline silica form in the lungs and chest lymph nodes. This disease may feature breathlessness and may resemble chronic obstructive pulmonary disease (COPD).
- Accelerated silicosis – occurs after exposure to larger amounts of respirable crystalline silica over a shorter period of time (5-15 years). Inflammation, scarring, and symptoms progress faster in accelerated silicosis than in simple silicosis.
- Acute silicosis – results from short-term exposure to very large amounts of respirable crystalline silica. The lungs become very inflamed and may fill with fluid, causing severe shortness of breath and low blood oxygen levels.

Progressive massive fibrosis may occur in simple or accelerated silicosis, but is more common in the accelerated form. Progressive massive fibrosis results from severe scarring and leads to the destruction of normal lung structures.

Section 5: FIREFIGHTING MEASURES

Flashpoint & Method:	Non-combustible	**Firefighting Equipment:**	Cement poses no fire-related hazard. A SCBA is recommended to limit exposures to combustion products when fighting any fire.
General Hazard:	Avoid breathing dust. Wet cement is caustic.		
Extinguishing Media:	Use extinguishing media appropriate for surrounding fire.	**Combustion Products:**	None.

Section 6: ACCIDENTAL RELEASE MEASURES

General: Place spilled material into a container. Avoid actions that cause the cement to become airborne. Avoid inhalation of cement and contact with skin. Wear appropriate protective equipment as described in Section 8. Scrape wet cement and place in container. Allow material to dry or solidify before disposal. Do not wash cement down sewage and drainage systems or into bodies of water (e.g. streams).

Waste Disposal Method: Dispose of cement according to Federal, State, Provincial and Local regulations.

Section 7: HANDLING AND STORAGE

General: Keep bulk and bagged cement dry until used. Stack bagged material in a secure manner to prevent falling. Bagged cement is heavy and poses risks such as sprains and strains to the back, arms, shoulders and legs during lifting and mixing. Handle with care and use appropriate control measures.

Engulfment hazard. To prevent burial or suffocation, do not enter a confined space, such as a silo, bin, bulk truck, or other storage container or vessel that stores or contains cement. Cement can buildup or adhere to the walls of a confined space. The cement can release, collapse or fall unexpectedly.

Properly ground all pneumatic conveyance systems. The potential exists for static build-up and static discharge when moving cement powders through a plastic, non-conductive, or non-grounded pneumatic conveyance system. The static discharge may result in damage to equipment and injury to workers.

Usage: Cutting, crushing or grinding hardened cement, concrete or other crystalline silica-bearing materials will release respirable crystalline silica. Use all appropriate measures of dust control or suppression, and Personal Protective Equipment (PPE) described in Section 8 below.

Housekeeping: Avoid actions that cause the cement to become airborne during clean-up such as dry sweeping or using compressed air. Use HEPA vacuum or thoroughly wet with water to clean-up dust. Use PPE described in Section 8 below.

Storage Temperature: Unlimited. **Storage Pressure:** Unlimited.

Clothing: Promptly remove and launder clothing that is dusty or wet with cement. Thoroughly wash skin after exposure to dust or wet cement.

Section 8: EXPOSURE CONTROLS AND PERSONAL PROTECTION

Engineering Controls: Use local exhaust or general dilution ventilation or other suppression methods to maintain dust levels below exposure limits.

Personal Protective Equipment (PPE):

Respiratory Protection: Under ordinary conditions no respiratory protection is required. Wear a NIOSH approved respirator that is properly fitted and is in good condition when exposed to dust above exposure limits.

Eye Protection: Wear ANSI approved glasses or safety goggles when handling dust or wet cement to prevent contact with eyes. Wearing contact lenses when using cement, under dusty conditions, is not recommended.

Skin Protection: Wear gloves, boot covers and protective clothing impervious to water to prevent skin contact. Do not rely on barrier creams, in place of impervious gloves. Remove clothing and protective equipment that becomes saturated with wet cement and immediately wash exposed areas.

Section 9: PHYSICAL AND CHEMICAL PROPERTIES

Physical State:	Solid (powder).	**Evaporation Rate:**	NA.
Appearance:	Gray, buff, or white powder.	**pH (in water):**	12 – 13
Odor:	None.	**Boiling Point:**	>1000° C
Vapor Pressure:	NA.	**Freezing Point:**	None, solid.
Vapor Density:	NA.	**Viscosity:**	None, solid.
Specific Gravity:	2.65 to 3.15	**Solubility in Water:**	Slightly (0.1 - 1.0%)

Section 10: STABILITY AND REACTIVITY

Stability: Stable. Keep dry until use. Cement reacts with water, resulting in a slight release of heat, depending on the amount of lime (Calcium oxide) present. Avoid contact with incompatible materials.

Incompatibility: Wet cement is alkaline and is incompatible with acids, ammonium salts and aluminum metal. Cement dissolves in hydrofluoric acid, producing corrosive silicon tetrafluoride gas. Cement reacts with water to form silicates and calcium hydroxide. Silicates react with powerful oxidizers such as fluorine, boron trifluoride, chlorine trifluoride, manganese trifluoride, and oxygen difluoride.

Hazardous Polymerization: None. **Hazardous Decomposition:** None.

Section 11 and 12: TOXICOLOGICAL AND ECOLOGICAL INFORMATION

For questions regarding toxicological and ecological information refer to contact information in Section 1.

Section 13: DISPOSAL CONSIDERATIONS

Dispose of waste and containers in compliance with applicable Federal, State, Provincial and Local regulations.

Section 14: TRANSPORT INFORMATION

This product is not classified as a Hazardous Material under U.S. DOT or Canadian TDG regulations.

Section 15: REGULATORY INFORMATION

OSHA/MSHA Hazard Communication: This product is considered by OSHA/MSHA to be a hazardous chemical and should be included in the employer's hazard communication program.

CERCLA/SUPERFUND: This product is not listed as a CERCLA hazardous substance.

EPCRA SARA Title III: This product has been reviewed according to the EPA Hazard Categories promulgated under Sections 311 and 312 of the Superfund Amendment and Reauthorization Act of 1986 and is considered a hazardous chemical and a delayed health hazard.

EPRCA SARA Section 313: This product contains none of the substances subject to the reporting requirements of Section 313 of Title III of the Superfund Amendments and Reauthorization Act of 1986 and 40 CFR Part 372.

RCRA: If discarded in its purchased form, this product would not be a hazardous waste either by listing or characteristic. However, under RCRA, it is the responsibility of the product user to determine at the time of disposal, whether a material containing the product or derived from the product should be classified as a hazardous waste.

TSCA: Masonry and Mortar cement and crystalline silica are exempt from reporting under the Inventory update rule.

Section 15: REGULATORY INFORMATION (continued)

California Proposition 65: Crystalline silica (airborne particulates of respirable size) and Chromium (hexavalent compounds) are substances known by the State of California to cause cancer.

WHMIS/DSL: Products containing crystalline silica and calcium carbonate are classified as D2A, E and are subject to WHMIS requirements.

Section 16: OTHER INFORMATION

Abbreviations:

>	Greater than	NA	Not Applicable
ACGIH	American Conference of Governmental Industrial Hygienists	NFPA	National Fire Protection Association
CAS No	Chemical Abstract Service number	NIOSH	National Institute for Occupational Safety and Health
CERCLA	Comprehensive Environmental Response, Compensation and Liability Act	NTP	National Toxicology Program
		OSHA	Occupational Safety and Health Administration
CFR	Code for Federal Regulations	PEL	Permissible Exposure Limit
CL	Ceiling Limit	pH	Negative log of hydrogen ion
DOT	U.S. Department of Transportation	PPE	Personal Protective Equipment
EST	Eastern Standard Time	R	Respirable Particulate
HEPA	High-Efficiency Particulate Air	RCRA	Resource Conservation and Recovery Act
HMIS	Hazardous Materials Identification System	SARA	Superfund Amendments and Reauthorization Act
IARC	International Agency for Research on Cancer	T	Total Particulate
		TDG	Transportation of Dangerous Goods
LC_{50}	Lethal Concentration	TLV	Threshold Limit Value
LD_{50}	Lethal Dose	TWA	Time Weighted Average (8 hour)
mg/m^3	Milligrams per cubic meter	WHMIS	Workplace Hazardous Materials Information System
MSHA	Mine Safety and Health Administration		

This MSDS (Sections 1-16) was revised on March 1, 2008.

An electronic version of this MSDS is available at: www.lafarge-na.com under the Products section.

Lafarge North America Inc. (LNA) believes the information contained herein is accurate; however, LNA makes no guarantees with respect to such accuracy and assumes no liability in connection with the use of the information contained herein which is not intended to be and should not be construed as legal advice or as insuring compliance with any federal, state or local laws or regulations. Any party using this product should review all such laws, rules, or regulations prior to use, including but not limited to US and Canada Federal, Provincial and State regulations.

NO WARRANTY IS MADE, EXPRESS OR IMPLIED, OF MERCHANTABILITY, FITNESS FOR A PARTICULAR PURPOSE, OR OTHERWISE.

Materials Engineering Unit

241 Erie Street, Room 234
Jersey City, NJ 07310
Tel: 201-216-2952 **Fax:** 201-216-2949

THE PORT AUTHORITY OF NY & NJ

TRANSMITTAL
No. 00047

PROJECT: WO12 South Wing Emerg. Stair Repairs

DATE: 11/18/2009

TO: VRH Construction Corp.
c/o Port Authority of NY & NJ
625 Eight Ave. 2nd Flr. North Bldg
New York, NY 10018

CONTRACT: PABT-200.200 WO12

ATTN: **Anthony Carnabuci**

		STATUS LEGEND:
☐ Shop Drawings	Approved (APP)	New Item (NEW)
☑ Letter	Approved as Corrected (AAC)	Not Approved (NA)
☐ Prints	Approved as Noted (AAN)	Not Reviewed (NR)
☐ Change Order	For Record Only (FRO)	Review With Comments (RWC)
☐ Plans	For Your Information (FYI)	Review With No Comments (RWNC)
☐ Samples	Incomplete (INC)	Superseded (SUPS)
☐ Specifications		
☑ Other: Made from Submittal	☐ Attached ☐ Separate Cover Via: Mail	
Review and Comment		

SUBMITTAL	REV.	DATE	DESCRIPTION	Remark	STATUS
02551-0003	R000	11/16/2009	Desc: I-5A Top Course (3% Marshall Air Voids) PG64-22 (Section 02551), Grace LLC, Batch Plant, Corona, NY	#1	NA

Remarks: 1. The Asphalt cement content shall be raised from 5.7% to at least 6.0% to decrease Marshall air voids to a target of 3%. The job mix formula should be re-submitted with these changes.

Material(s), which do not conform to the contract documents, will be subject to rejection at the job site by the Resident Engineer.

If you have any questions, please call John Varrone of my staff at (201) 216-2976. Our fax number is (201) 216-2949.

CC: P. Salvatore w/att., A. Kaprielian w/att., J. Varrone, MF

Signed:
Casimir Bognacki, P.E.
Chief of Materials Engineering

Expedition ®

VRH Construction Co. p.
625 Eighth Avenue
2nd Flr, North Building
New York, NY 10018
Phone: 212-629-6187
Fax: 212-629-9243

SUBMITTAL NO. 02551-003
PACKAGE NO: 02551

TITLE: I-5A Design Mix from Grace
PROJECT: PANY/NJ-bt-200.200 WO 12
DRAWING:
STATUS: 3
BIC: PANYNJ

REQUIRED START: 10/22/2009
REQUIRED FINISH: 11/5/2009
DAYS HELD: 0
DAYS ELAPSED: 0
DAYS OVERDUE: -14

RECEIVED FROM		SENT TO		RETURNED BY		FORWARDED TO	
TG	JB	PANYNJ	KC	PANYNJ	KC	TG	JB

Revision No.	Description / Remarks	Received	Sent	Returned	Forwarded	Status	Sepias	Prints	Drawing Date	Held	Elapsed
000	I-5A Design Mix from Grace	10/22/2009	10/22/2009			3	0	9		0	0

Expedition®

Plant:
30-01 Harper Street
Corona, NY 11368
Phone: 718/898-1700

GRACE ASPHALT LLC.

Office:
151-45 6 th Road
Whitestone, NY 11357
Phone: 718/767-9000

JOB MIX FORMULA

Mix Type: I-5A (PG64-22) *Date:* March 19, 2007
Section: NON-FAA STD 02551 *Producer:* GRACE ASPHALT

Project: _____
Contractor: _____

MATERIALS PROPORTIONS, WEIGHT, AND SOURCES

Bin	JMF (%)	Weight (Lb)	Source & Location
3/4"	-	-	Tilcon, HaverStraw, NY
3/8"	37.7	4524	Tilcon, HaverStraw, NY
1/4"	10.4	1248	Tilcon, HaverStraw, NY
Sand	46.2	5544	Tilcon, Clinton Point, NY
Filler	-	-	Baghouse, Grace Asphalt, NY
RAP[1]	-	-	Processed, Grace Asphalt, NY
BC[2]	5.7	684	Citgo Asphalt, Bronx, NY (PG64-22)
Total	100.0	12000	

Note: 1 = Reclaimed Asphalt Pavements
2 = Binder Content

ASPHALT MIXTURE MARSHALL PROPERTIES

Property	Design	Minimum	Maximum
Stability (Lb)	2690	2150	
Flow (0.01 in.)	11.5	8	16
Air Voids (AV) %	4.0	3.3	4.7
Voids in Mineral Aggregates (VMA)%	17.8	16	
Voids Filed with Binder (VFB) %	76.8	65	75

Remarks:

1. Standard Marshall method of mix design, ASTM D-1559, has been followed with 75 blows per sample face (4" diameter by 2.5 " thickness specimens).
2. ASTM D-2041, D-2726, D-3203, and D-3549 have been followed.
3. Mixing and compaction temperatures were 300 ± 5 °F and 285 ± 5 °F, respectively.
4. Based on early results, it appears that the Becontent specification limits (5.8-6.5%) are little high for the used aggregates type. This may explain why the design BC content is 5.7%.

Designed & Submitted By:
Syed Zaman
(Design & Quality Control)

02551-003
200.200 W.O. 12

GRACE

THE PORT AUTHORITY OF NY & NJ

ENGINEERING DEPARTMENT - MATERIALS ENGINEERING DIVISION

MIX TYPE: I-5A (PG64-22)
SECTION: NON-PAA STD 02551
PRODUCER: GRACE ASPHALT
LOCATION: CORONA, NY

AGGREGATES GRADATION ANALYSIS

AGGREGATE INFORMATION					
Aggregate		Source Number	Agg. Blend %		
Coarse	No. 2 Stone				
	#1 Stone			* 1 High Friction Blend	100
	#1 Non-Carbonate Stone	8-10R	40.0		
	#1A Stone			#1A High Friction Blend	100
	#1A Non-Carbonate Stone	8-10R	11.0		
Fine	Manufactured Sand	8-9FM	49.0		
Mineral Filler		BAGHOUSE			

AVERAGE BIN BREAKDOWN

Sieve Size	BIN NO. 3/4 %		BIN NO. 3/8 %		BIN NO. 1/4 %		BIN NO. SAND %		Mineral Filler %	
	Retained	Passing	Retained	Passing	Retained	Passing	Retained	Passing	Retained	Passing
1 1/2"										
1"										
3/4"										
1/2"			0.0	100.0	0.0	100.0				
3/8"			26.6	73.4	0.3	99.7	0.0	100.0		
#4			95.2	4.8	61.0	39.0	0.3	99.7		
#8			99.5	0.5	98.6	1.4	20.4	79.6		
#16			100.0	0.0	99.1	0.9	54.9	45.1		
#30					99.4	0.6	70.7	29.3		
#50					99.6	0.4	81.3	18.7		
#100					99.7	0.3	89.6	10.4		
#200					99.8	0.2	93.9	6.1		
PAN										

COMBINED AVERAGE GRADATION

BIN	% BATCH	% Passing Sieve 1 1/2"	1"	3/4"	1/2"	3/8"	#4	#8	#16	#30	#50	#100	#200
3/4													
3/8	40				40.0	29.4	1.9	0.2					
1/4	11				11.0	11.0	4.3	0.2	0.1				
SAND	49				49.0	49.0	48.9	39.0	22.1	14.4	9.2	5.1	3.0
Mineral Filler													
Total	100				100.0	89.3	55.1	39.4	22.2	14.4	9.2	5.1	3.0
General Specification Limits					100 100	80 100	55 85	32 42	20 30	12 22	7 16	3 12	2 6

Remarks:
1 ASTM D-75 and ASTM C-136 have been followed

Tested By: Grace Asphalt

Date: March 19, 2007

10/22/2009 THU 11:27 [TX/RX NO 6560] 002

THE PORT AUTHORITY OF NY & NJ

ENGINEERING DEPARTMENT - MATERIALS ENGINEERING DIVISION

MIX TYPE: I-5A (PG64-22)
SECTION: NON-PAA STD 02551
PRODUCER: GRACE ASPHALT
LOCATION: CORONA, NY

ASPHALT MIXTURE GRADATION

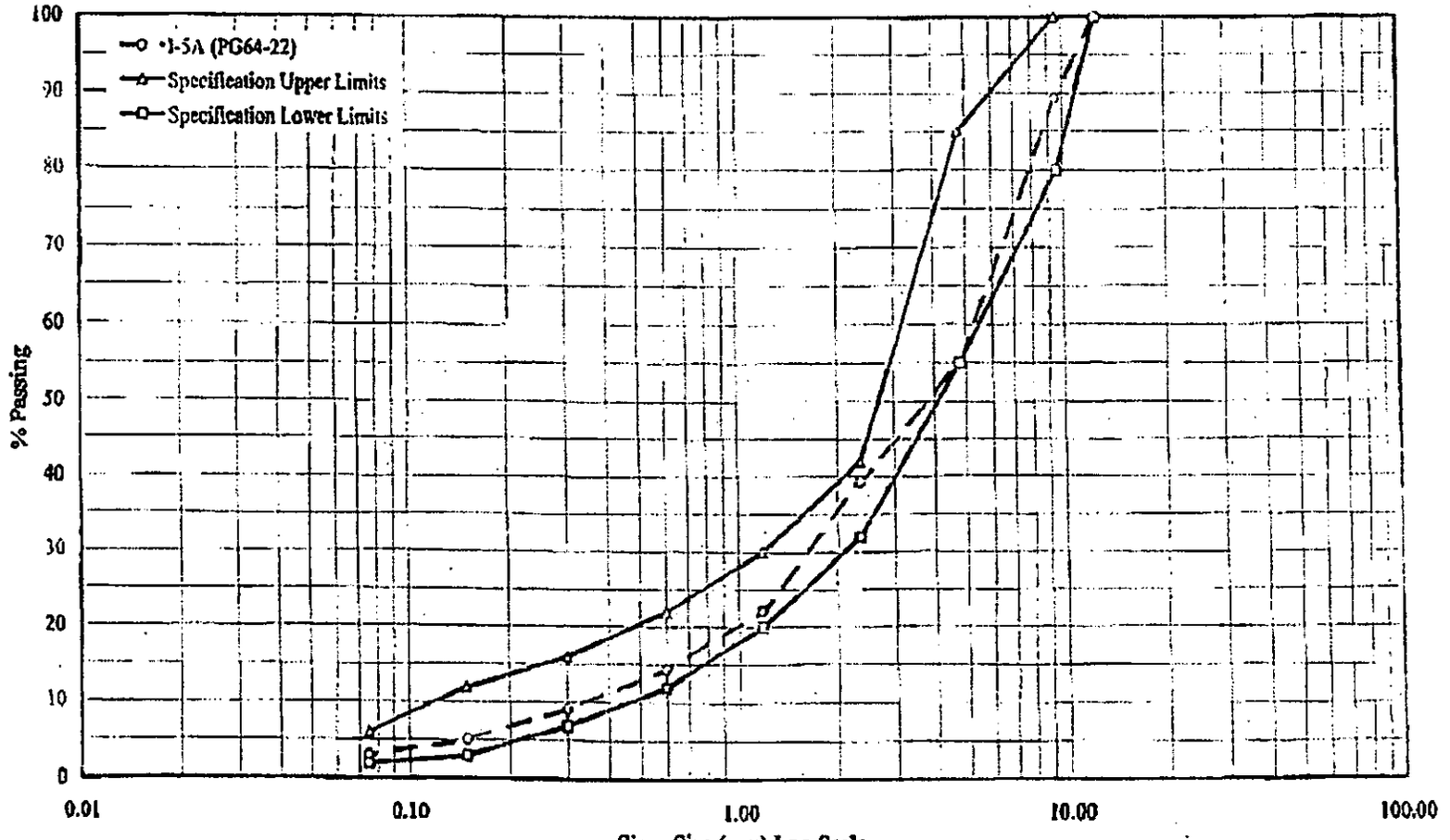

Sieve Size	1 1/2"	1"	3/4"	1/2"	3/8"	#4	#8	#16	#30	#50	#100	#200	BC (%)
General Limits				100 - 100	80 - 100	55 - 85	32 - 42	20 - 30	12 - 22	7 - 16	3 - 12	2 - 6	5.8 - 6.5
Action Limits				100 - 100	85 - 93	51 - 59	35 - 43	18 - 26	10 - 18	6 - 12	3 - 7	1 - 5	5.4 - 6.0
Suspension Limits				100 - 100	80 - 98	46 - 64	32 - 47	15 - 30	7 - 22	5 - 14	2 - 8	0 - 6	5.0 - 6.4
JMF				100.0	89.3	55.1	39.4	22.2	14.4	9.2	5.1	3.0	5.7

Tested By: Grace Asphalt

Date: March 19, 2007

10/22/2009 THU 11:27 [TX/RX NO 6560] 003

THE PORT AUTHORITY OF NY & NJ
ENGINEERING DEPARTMENT - MATERIALS ENGINEERING DIVISION

MIX TYPE: I-5A (PG64-22)
SECTION: NON-FAA STD 02551
PRODUCER: GRACE ASPHALT
LOCATION: CORONA, NY

MAXIMUM SPECIFIC GRAVITY OF BITUMINOUS PAVING MIXTURES (ASTM D-204), RICE METHOD

G_{mm} = Maximum Specific Gravity of Hot Mix Asphalt
A = Weight of Dry Sample in Air, grams
D = Weight of Flask Filled with Water at 77 °F (25 °C), grams
E = Weight of Flask Filled with Water and Sample at 77 °F (25 °C), grams
GMM = A / (A+D-E)

Binder Content	5.0%		5.5%		6.0%		6.5%		7.0%	
Test No.	1	2	1	2	1	2	1	2	1	2
A	1532.3	1546.9	1526.0	1523.8	1544.7	1525.4	1562.0	1523.4	1522.3	1528.7
D	7501.5	7511.8	7501.5	7511.8	7501.5	7511.8	7501.5	7511.8	7501.5	7511.8
E	8451.3	8470.0	8442.7	8452.0	8447.2	8448.0	8454.2	8442.0	8427.1	8440.8
A+D-E	582.5	588.7	584.8	583.6	599.0	589.2	609.3	593.2	596.7	599.7
G_{mm}	2.631	2.628	2.609	2.611	2.579	2.589	2.564	2.568	2.551	2.549
Average G_{mm}	2.629		2.610		2.584		2.566		2.550	

Tested By: Grace Asphalt Date: March 19, 2007

10/22/2009 THU 11:27 [TX/RX NO 6560] 004

FROM BARSOM ASSOCIATES 10 22 2009 P005

THE PORT AUTHORITY OF NY & NJ
ENGINEERING DEPARTMENT - MATERIALS ENGINEERING DIVISION

MIX TYPE: I-5A (PG64-22)
SECTION: NON-FAA STD 02551
PRODUCER: GRACE ASPHALT
LOCATION: CORONA, NY

MARSHALL MIX PROPERTIES

Specimen	Binder Content	Weight, Grams			Volume	Specific Gravity		BC	Voids- Percent		V.M.A.	Density	Corr.	Stability, Lb		Flow
		In Air	S.S.D.	In Water	(cm^3)	Bulk	Theor.	Volume, %	Total Mix	Filled	(%)	Lb/ft³	Ratio	Measured	Corrected	(0.01 in.)
a	b	c	d	e	f	g	h	i	j	k	l	m	n	o	p	q
					(d-e)	(c/f)		(f*g/1.03)	100(1-g/h)	i*100/(i+j)	100-(f/a)	(g x 62.4)			(n*o)	
A		1288.0	1291.5	768.2	523.3	2.461							0.96	2700	2592	11.0
B	5.0%	1276.6	1279.8	760.0	519.8	2.456							1.00	2640	2640	10.0
C		1276.8	1279.8	761.5	518.3	2.463							1.00	2580	2580	10.0
Average						2.460	2.629	11.94	6.42	65.0	16.4	154.0			2604	10.3
A		1285.4	1287.6	771.5	516.1	2.491							1.00	2770	2770	11.5
B	5.5%	1281.2	1282.5	769.3	514.2	2.492							1.00	2700	2700	11.5
C		1284.9	1287.3	771.1	516.2	2.489							1.00	2690	2690	10.5
Average						2.491	2.610	12.30	4.59	74.4	17.9	155.9			2720	11.3
A		1289.1	1290.3	775.8	514.5	2.506							1.00	2770	2770	12.0
B	6.0%	1285.6	1287.6	772.0	515.6	2.493							1.00	2570	2570	12.6
C		1287.9	1290.0	775.1	514.9	2.501							1.00	2740	2740	12.0
Average						2.500	2.584	14.56	3.24	81.8	17.8	156.5			2693	12.0
A		1296.6	1297.6	781.6	516.0	2.513							1.00	2640	2640	13.5
B	6.5%	1294.5	1295.7	779.8	515.9	2.509							1.00	2600	2600	13.5
C		1293.8	1295.0	779.8	515.2	2.511							1.00	2520	2520	13.0
Average						2.511	2.566	15.85	2.13	86.1	18.0	157.2			2587	13.3
A		1298.9	1299.7	782.7	517.0	2.512							1.00	2670	2620	15.0
B	7.0%	1297.8	1298.3	781.2	517.1	2.510							1.00	2570	2570	14.0
C		1299.3	1300.1	781.7	518.4	2.506							1.00	2320	2320	14.0
Average						2.510	2.550	17.05	1.59	91.5	18.6	157.1			2503	14.3

Tested By: Grace Asphalt

Date: March 19, 2007

10/22/2009 THU 11:27 [TX/RX NO 6560] 005

THE PORT AUTHORITY OF NY & NJ
ENGINEERING DEPARTMENT - MATERIALS ENGINEERING DIVISION

MIX TYPE: I-5A (PG64-22)
SECTION: NON-FAA SID 02551
PRODUCER: GRACE ASPHALT
LOCATION: CORONA, NY

MIX PARAMETER & BINDER CONTENT RELATIONSHIPS

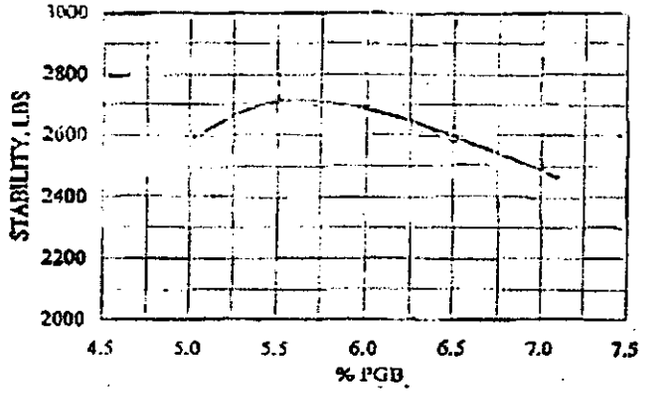

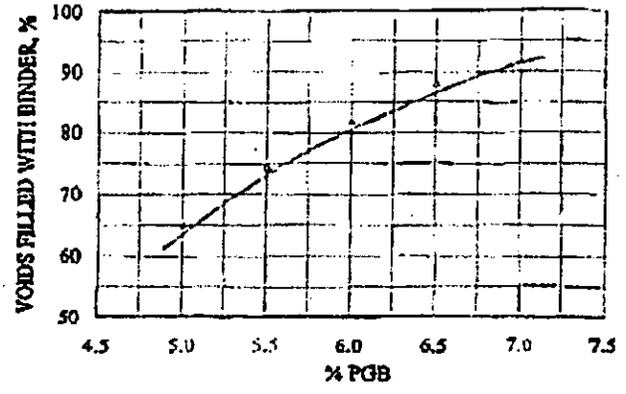

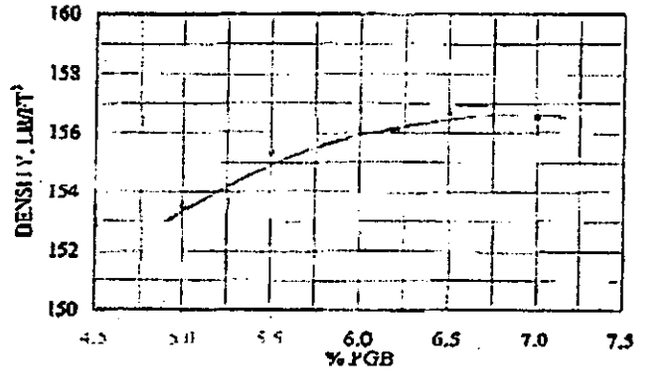

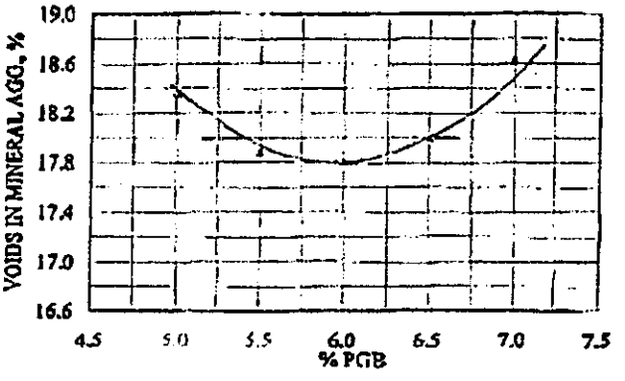

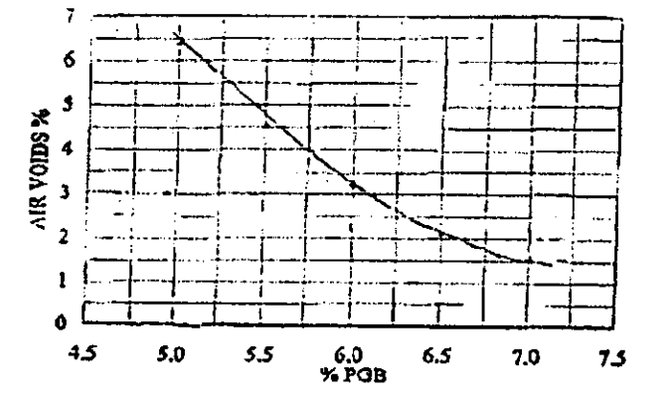

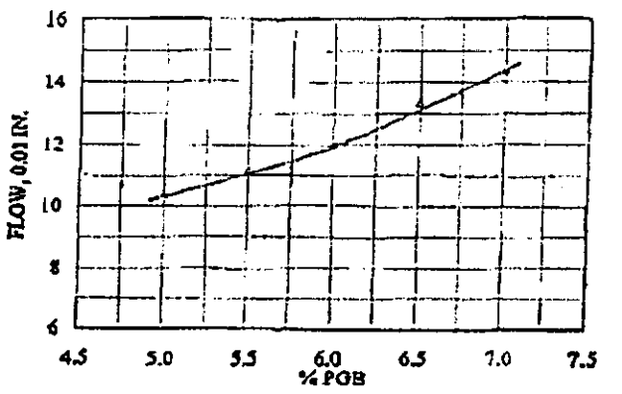

% BC AT MAXIMUM STABILITY: 5.5
% BC AT MAXIMUM DENSITY : 6.0

% BC AT AV RANGE MID-POINT: 5.7
OPTIMUM BINDER CONTENT: 5.7

VALUES AT OPTIMUM BINDER CONTENT

PROPERTY	STABILITY, Lb	DENSITY, PCF	AIR VOIDS, %	VFB, %	VMA, %	FLOW, 0.01 IN.
DESIGN SPECS.	2150 (minimum)		3.3 - 4.7	65 - 75	16 (minimum)	8 - 16
PROD. SPECS.	1800 (minimum)		2.5 - 5.5	65 - 75	16 (minimum)	8 - 16
DESIGN	2690	155.6	4.0	76.8	17.8	11.5

Tested By: Grace Asphalt Date: March 19, 2007

THE PORT AUTHORITY OF NY NJ
ENGINEERING DEPARTMENT - MATERIALS ENGINEERING DIVISION
SUBMITTED ASPHALT CONCRETE JOB MIX FORMULA

JOB DESCRIPTION: The Port Authority Bus Terminal - South Wing Emergency Stair Repair
CONTRACT #: BT-200.200 Work Order 12
SUBMITTAL #: 02551-0003
MIX TYPE: I-5A Top Course (3% Marshall Air Voids) PG64-22 (Section 02551)
CONTRACTOR: VRH Construction Corp. (Sub: Carullo Construction Corp.)
SUPPLIER: Grace Asphalt, L.L.C. LOCATION: Corona, NY
PLANT TYPE: Batch Plant
LOT SIZE: A Day's Production (300 Tons Minimum, 2000 Tons Maximum)(Mat & Joint Cores)
PAYMENT SHEET: Marshall Air Void And In-Place Density Deduction (Compensation In Excess Of 100 %) (PA 3597A, 7-95)
First sublot can be excluded from M.A.V. payment computation, if mix was not produced during preceding 24 hours.

JOB MIX FORMULA GRADATION (% PASSING)

SIEVE SIZE	J.M.F. GRAD.	GENERAL SPEC.	ACTION LIMITS	SUSPENSION LIMITS
1 1/4"	100.0	100.0 - 100.0	100.0 - 100.0	100.0 - 100.0
1"	100.0	100.0 - 100.0	100.0 - 100.0	100.0 - 100.0
3/4"	100.0	100.0 - 100.0	100.0 - 100.0	100.0 - 100.0
1/2"	100.0	100.0 - 100.0	100.0 - 100.0	100.0 - 100.0
3/8"	89.3	80.0 - 100.0	85.0 - 93.0	80.0 - 98.0
# 4	55.1	55.0 - 85.0	51.0 - 59.0	46.0 - 64.0
# 8	39.4	32.0 - 42.0	35.0 - 43.0	31.5 - 46.5
# 16	22.2	20.0 - 30.0	18.0 - 26.0	14.5 - 29.5
# 30	14.4	12.0 - 22.0	10.0 - 18.0	6.5 - 21.5
# 50	9.2	7.0 - 16.0	6.0 - 12.0	4.5 - 13.5
# 100	5.1	3.0 - 12.0	3.0 - 7.0	2.0 - 8.0
# 200	3.0	2.0 - 6.0	1.0 - 5.0	0.0 - 6.0
ASPHALT CEMENT	**5.70**	**6.0 - 6.5** Extraction	5.4 - 6.0	5.0 - 6.4

MARSHALL CRITERIA

	DESIGN	DESIGN REQUIREMENTS	PRODUCTION REQUIREMENTS
STABILITY	2690	2150 Minimum	1800 Minimum
FLOW	11.5	8.0 - 16.0	8.0 - 16.0
AIR VOIDS (%)	**4.0**	**2.3 - 3.7**	**1.5 - 4.5**
VOIDS FILLED WITH ASPHALT (%)	76.8	70.0 - 80.0	70.0 - 80.0
VOIDS IN MINERAL AGGREGATE (%)	17.8	16.0 Minimum	16.0 Minimum
IN-PLACE DENSITY (%)			96.3
IN-PLACE JOINT DENSITY (%)			93.3

MATERIAL SOURCES

TYPE & SIZE	J.M.F. %	MANUFACTURER / LOCATION	APPROVED
ASTM # 8 - 3/8" STONE	37.7%	Tilcon NY Inc., Haverstraw, NY	Yes
ASTM # 9 - 1/4" STONE	10.4%	Tilcon NY Inc., Haverstraw, NY	Yes
ASTM # 10 - SCREENINGS		Tilcon NY Inc., Haverstraw, NY	Yes
ASTM C-33 - STONE SAND	46.2%	Tilcon NY Inc., Clinton Point, NY	Yes
FILLER - RECLAIMED FINES		Grace Asphalt, LLC., Corona, NY	Yes
AC - PG64-22	5.70%	NuStar Refining, LLC., Bronx, NY	Yes

MIX TEMPERATURE LEAVING PLANT: 275 - 325 Degrees F
MARSHALL COMPACTION TEMPERATURE: 275 - 295 Degrees F.

REMARKS: The Asphalt cement content shall be raised from 5.7% to at least 6.0% to decrease Marshall air voids to a target of 3%. The job mix formula should be re-submitted with these changes.

JOB MIX FORMULA: Not Approved

DATE: 11/13/09

ASPHALT LABORATORY SUPERVISOR

Materials Engineering Unit

241 Erie Street, Room 234
Jersey City, NJ 07310
Tel: 201-216-2952 **Fax:** 201-216-2949

THE PORT AUTHORITY OF NY & NJ

TRANSMITTAL
No. 00051

PROJECT: WO12 South Wing Emerg. Stair Repairs

DATE: 12/8/2009

CONTRACT: PABT-200.200 WO12

TO: VRH Construction Corp.
c/o Port Authority of NY & NJ
625 Eight Ave. 2nd Flr. North Bldg
New York, NY 10018

ATTN: **Anthony Carnabuci**

	STATUS LEGEND:	
☐ Shop Drawings	Approved (APP)	New Item (NEW)
☑ Letter	Approved as Corrected (AAC)	Not Approved (NA)
☐ Prints	Approved as Noted (AAN)	Not Reviewed (NR)
☐ Change Order	For Record Only (FRO)	Review With Comments (RWC)
☐ Plans	For Your Information (FYI)	Review With No Comments (RWNC)
☐ Samples	Incomplete (INC)	Superseded (SUPS)
☐ Specifications		
☑ Other: Made from Submittal	☑ Attached ☐ Separate Cover Via: Mail	
	Review and Comment	

SUBMITTAL	REV.	DATE	DESCRIPTION	Remark	STATUS
04212-0006	R000	12/4/2009	Desc: Certificate of Compliance for Yankee Hill Medium Iron Spot Norman Brick meeting ASTM c216 Class SW, Type FBX and tested in accordance to ASTM C67; Contract Drawing A214		APP

Remarks: Approvals shall not relieve the Contractor of any responsibility as required by the Contract or waive any further authority of the Engineer or modify or waive any provision of the subject Contract with regard to this material(s) or its approval.

Material(s), which do not conform to the contract documents, will be subject to rejection at the job site by the Resident Engineer.

If you have any questions, please call Alex Alvarez of my staff at (201) 216-2975. Our fax number is (201) 216-2949.

CC: P. Salvatore w/att., A. Kaprielian w/att., A. Alvarez, MF

Signed:
Casimir Bognacki, P.E.
Chief of Materials Engineering

Expedition ®

LETTER OF TRANSMITTAL

AA

Action Key
1 For your records and/or use
2 For price quotation
3 For approval
4 Approved/Reviewed
5 Approved as noted: Re-submission not required
6 Approved as noted: Revise and re-submit
7 Rejected: Re-submit per contract documents

VRH
CONSTRUCTION CORP.
General Contractors & Construction Managers

To	The Port Authority of NY & NJ	Transmittal No.	00066
	Two Gateway Center	Job No.	2030WO12
	15th Floor	Project	PANY/NJ-bt-200.200 WO 12
	Newark, NJ 07102		South Wing Emergency Stair Repairs
Attention	Ka Kei Chan		
Phone No.	973-792-4629 Fax 973-792-4602		

We are sending you herewith the following: ☐ Drawings ☒ Shop Drawings ☐ Samples ☐ Specifications ☒ Other:

Via: ☒ Attached ☐ Separate Cover Via Mail

Quantity	Drawing/Submittal No.	Description	Action
9	04212-006	Dwg: Title: Yankee Hill Medium Iron Spot Velour Desc: Yankee Hill Medium Iron Spot Velour Norman Brick	3

FILED NOV 25 2009

Remarks:

cc: P. Salvatore; A. Kaprielian/PANYNJ

Signed Anthony Carnabucci

By Anthony J. Carnabucci

Date 11/20/2009

RECEIVED
NOV 25 2009
BY:

625 Eighth Avenue
2nd Flr, North Building
New York, NY 10018

Phone
212-629-6187
Fax
212-629-9243

VRH Construction Corp.

625 Eighth Avenue
2nd Flr, North Building
New York, NY 10018

Phone: 212-629-6187
Fax: 212-629-9243

SUBMITTAL NO. 04212-006
PACKAGE NO: 04212

TITLE: Yankee Hill Medium Iron Spot Velour
PROJECT: PANY/NJ-bt-200.200 WO 12
DRAWING:
STATUS: 3
BIC: PANYNJ

REQUIRED START: 5/26/2009
REQUIRED FINISH: 11/2/2009
DAYS HELD: -3
DAYS ELAPSED: 0
DAYS OVERDUE: 18

RECEIVED FROM		SENT TO		RETURNED BY		FORWARDED TO	
TG	JB	PANYNJ	KC	PANYNJ	KC	TG	JB

Revision No.	Description / Remarks	Received	Sent	Returned	Forwarded	Status	Sepias	Prints	Drawing Date	Held	Elapsed
000	Yankee Hill Medium Iron Spot Velour Norman Brick	11/20/2009	11/23/2009			3	0	9		-3	0

Expedition®

YANKEE HILL BRICK & TILE

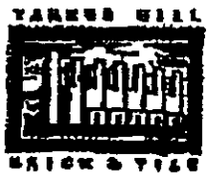

November 18, 2009

Belden Brick Sales & Service
386 Park Avenue South, Suite 801
New York, NY 10016
Tel. 646.277.5805
Fax: 212.686.4387

Subject: Certification of Compliance
Project: Luisi Building Materials
1628 62nd Street

We hereby certify that the Yankee Hill Medium Iron Spot Velour Norman Brick as submitted on the above referenced project meet and exceed all requirements as set forth in ASTM C216-07 for Class SW, Type FBX.

Please refer to the attached Test Data sheets.

Sincerely,

Steve Bertrand
Customer Service
Yankee Hill Brick

04212-006
200.200 W.O. 12

NATIONAL BRICK RESEARCH CENTER

The National Brick Research Center
100 Clemson Research Blvd.
Anderson, SC 29625
Ph:(864)656-1094
Fax:(864)656-1095
www.brickandtile.org

Results of Tests on Brick conducted in accordance with ASTM C67-05
"Standard Methods for Sampling and Testing Brick and Structural Clay Tile"

To:	Yankee Hill Brick 3705 S. Coddington Ave. Lincoln NE 68522	*Report Number:*	YHBC-0007
Phone:	402-477-8683	*Sampled Date:*	December 11, 2007
Fax:	402-477-2832	*Report Date:*	January 23, 2008

Sample Description: Medium/Dark Ironspot Facing Brick

Compressive Strength	*1*	*2*	*3*	*4*	*5*	*Average*	*Test Date*
psi	11,948	11,533	11,807	12,356	12,209	11,971	1/18/2008
MPa	82.4	79.5	81.4	85.2	84.2	82.5	
Absorption	*1*	*2*	*3*	*4*	*5*		
24 Hour Submersion in Cold Water (%)	3.45	3.82	3.88	3.82	3.83	3.67	1/16/2008
5 Hour Submersion in Boiling Water (%)	5.68	6.11	5.92	5.97	5.88	5.87	
[illegible] Coefficient (Ratio of 24 Hr to 5 Hr)	0.61	0.62	0.62	0.64	0.64	0.63	
Initial Rate of Absorption	*6*	*7*	*8*	*9*	*10*		
Gain in Weight in one minute (g)	4.5	4.2	3.6	5.0	3.9	4.2	1/16/2008
Efflorescence	*11*	*12*	*13*	*14*	*15*		
	Not Efflorescent	Not Efflorescent	Not Efflorescent	Not Efflorescent	Not Efflorescent		1/23/2008

The Brick represented by the test results shown here comply with the standards listed below:

ASTM C 216-05 Standard Specification for Facing Brick (Solid Masonry Units Made from Clay or Shale

Grade: SW, MW

Dennis Brosnan, Ph.D., P.E.
Director
The National Brick Research Center

Jim Frederic
Associate Director
The National Brick Research Center

Lab Reference: 7008

MATERIAL SAFTY DATA SHEET

Revision Date: March 2004

Product Identity: Clay Brick

Manufacture's Name:
Yankee Hill Brick
3705 S. Coddington Ave.
Lincoln, NE 68522

Telephone Number: (402) 477-6663

Date Prepared: December 1994

Product Components

	CAS	%Rx Wt	ACGIH TLV	OSHA PEL
Clay (Aluminum Silicate)	Var.	>93%	10 mg/m³	15 mg/m³
Manganese Dioxide	1313-13-9	0-4%	5.0 mg/m³	5.0 mg/m³
Iron Chromite	1308-31-9	0-4%	1.0 mg/m³	1.0 mg/m³
Barium Carbonate	Var.	0-1%	10-15 mg/m³	20 mg/m³

Exposure Limits of Hazardous Components

Quartz (crystalline silica)	14808-60-7	0.1 mg/m³	10 mg/m³
Barium Carbonate	513-77-9	0.5 mg/m³	0.5 mg/m³
Iron Chromite	1308-31-9	1.0 mg/m³	1.0 mg/m³
Manganese Dioxide	1313-13-9	5.0 mg/m³	5.0 mg/m³

Boiling Point:	N/A	**Evaporation Rate:**	NA
Vapor Pressure:	N/A	**Solubility in H_2O:**	0.
Vapor Density:	N/A	**Specific Gravity:**	2.6
Melting Point:	N/A		

Appearance and odor: vitrified solid, odorless, wide color range.

Flash Point:	non-combustible	**UEL:**	N/A
Extinguishing Media:	N/A	**LEL:**	N/A
Unusual Fire and Explosion Hazards:	none	**Flammable Limits:**	N/A
Special Fire Fighting Procedures:	none		

Stability:	Stable.	**Conditions to avoid:** none
Incompatibility:	none known.	
Hazardous decomposition or byproducts:	none known	
Hazardous polymerization:	will not occur	**Conditions to avoid:** none

Primary route of Exposure: Inhalation

Exposure limits: (see Section II)

Sub-chronic and Chronic Health Effects:

Pulmonary Diseases: Excessive exposure to particulate (dust) over and extended period of time may result in the development of silicosis and other pulmonary diseases.

Carcinogenicity: IARC has classed respirable crystalline silica (quartz) as a 2A carcinogen, a known carcinogen in humans Chromium has been classed as a 1 (carcinogenic to humans).

Medical Conditions Aggravated by Exposure:
Excessive dust exposure may aggravate any existing respiratory disorders or diseases. Possible complications of allergies resulting in irritation to skin, eyes and respiratory passages may occur from excessive exposure to dusts.

California Proposition-65 law prohibits release of crystalline silica to air in the work place or to water of the state without the proper warning.

Acute Effects:

Eye: dust or chips may cause mild to severe irritation or abrasion.
Skin: dust or chips may cause allergic reactions.
Ingestion: none known
Inhalation: dust or chips may cause congestion and irritation in nasal and respiratory passages
Excessive exposure may result in abrasions, coughing sneezing and shortness of breath.

First Aid:

Eyes: Flush eye with running water. Obtain medical assistance if irritation continues
Skin: Wash with soap and water. If an allergic reaction causes a rash that does not heal in an appropriate time, consult a physician. Treat abrasions as any other scrape or cut with disinfectants and bandages.
Inhalation: Remove from exposure to airborne particulate. Consult a physician if breathing does not return to normal.
Ingestion: N/A.

Steps to Be Taken in Case Material is Released or Spilled:
Use dustless systems for handling, storage, and clean up so that airborne dust does not exceed the PEL. Use adequate ventilation and dust equipment. Practice good housekeeping. Do not permit dust to collect on walls, floors, sills, ledges, machinery, or equipment. Maintain clean, and test respirators in accordance with OSHA regulations. Maintain and test ventilation and dust collection equipment. Wash or vacuum clothing that has become dusty

Waste Disposal Method:
This material is classed as a non-hazardous solid waste for disposal.

Precautions to Be Taken in Handling and Storing: None

Other Precautions:
It is strongly recommended that wet cutting or grinding methods be employed. Water will greatly reduce the risk to exposure, because dust will be greatly minimized or eliminated. See OSHA Hazard Communication Rule 29 CFR and state and local worker or community "right to know" law and regulations. We recommend that smoking be prohibited in all areas where respirators must be used. **WARN YOUR EMPLOYEES (AND YOUR CUSTOMERS-USERS IN CASE OF RESALE) BY POSTING, AND OTHER MEANS OF HAZARD AND OSHA PRECAUTIONS TO BE USED. PROVIDE TRAINING FOR YOUR EMPLOYEES ABOUT THE OSHA PRECAUTIONS.** See also American Society for Testing and Materials (ASTM) Standard Practice E1132-86, "Standard Practice for Health Requirements Relating to Occupational Exposure to Quartz Dust.

[redacted]

Respiratory Protection:
To minimize exposure to dust and/or crystalline silica, cutting or grinding clay brick and other clay products should be conducted with a wet saw/grinder and with sufficient ventilation. When such controls are not possible, NIOSH/MSHA approved respirators must be worn in accordance with respiratory protection program which meets OSHA requirements as set forth at 29 CFR 1910.134 and ZS8.2-1080 "Practices for Respiratory Protection."

Skin Protection: Use gloves and/or protective clothing if abrasion or allergic reactions occur.

Eye Protection: Use safety glasses with side shields. Face shields should be worn when dry sawing brick.

Local Exhaust: Meet PEL requirements set out above in section II.

Safety Measures: Wear hard hats and/or steel toed safety shoes if brick is elevated.

Work/Hygienic Practices: Avoid eating and breathing dust.

[redacted]

The information and recommendations contained herein are based upon the data believed to be correct. However, no guarantee or warranty of any kind, express or implied, is made with respect to the information contained herein. We accept no responsibility and disclaim all liability for any harmful health effects which may be caused by exposure to airborne dust particles created by dry sawing or grinding of brick products. Users of this product should comply with all applicable health and safety laws, regulations and orders.

MSDS STATUS: Revision 2
PREPARER: Todd Selverding
Title: QC/Ceramic Engineer
Telephone: 402-477-6663 ext. 234

Materials Engineering Unit

[illegible]

[illegible]

[illegible]

TRANSMITTAL

No. [illegible]

PROJECT: WO12 South Wing Emerg. Stair Repairs

DATE: [illegible]

TO: VRH Construction Corp.
c/o Port Authority of NY & NJ
625 Eight Ave. 2nd Flr. North Bldg
New York, NY 10018

CONTRACT: PABT-200.200 WO12

200.200
W.O. 12

ATTN: Anthony Carnabuci

	STATUS	LEGEND:
☐ Shop Drawings	Approved (APP)	New Item (NEW)
☑ Letter	Approved as Corrected (AAC)	Not Approved (NA)
☐ Prints	Approved as Noted (AAN)	Not Reviewed (NR)
☐ Change Order	For Record Only (FRO)	Review With Comments (RWC)
☐ Plans	For Your Information (FYI)	Review With No Comments (RWNC)
☐ Samples	Incomplete (INC)	Superseded (SUPS)
☐ Specifications		
☑ Other: Made from Submittal	☐ Attached ☐ Separate Cover Via: Mail	
	Review and Comment	

SUBMITTAL	REV.	DATE	DESCRIPTION	Remark	STATUS
04100-0002A	R001	12/1/2009	Desc: Imperial Brothers Inc.; Certification Letter and Test Report for "Fine Sand from Roanoke Sand & Gravel"; sieve analysis conform to ASTM C144, Aggregate for Masonry Mortar.	#1	AAN

Remarks: 1. The submitted sand is approved to be used with mortar type S (see submittal 04100-002B). Follow ASTM C270, Table 1 for required sand ratio.

Approvals shall not relieve the Contractor of any responsibility as required by the Contract or waive any further authority of the Engineer or modify or waive any provision of the subject Contract with regard to this material(s) or its approval.

Material(s), which do not conform to the contract documents, will be subject to rejection at the job site by the Resident Engineer.

If you have any questions, please call Carlos Perez of my staff at (201) 216-2589. Our fax number is (201) 216-2949

CC: P. Salvatore w/att., A. Kaprielian w/att., C. Perez, MF

Signed: [signature]
Casimir Bognacki, P.E.
Chief of Materials Engineering

Expedition ®

LETTER OF TRANSMITTAL

Action Key
1 For your records and/or use
2 For price quotation
3 For approval
4 Approved/Reviewed
5 Approved as noted: Re-submission not required
6 Approved as noted: Revise and re-submit
7 Rejected: Re-submit per contract documents

VRH
CONSTRUCTION CORP.
General Contractors & Construction Managers

To	The Port Authority of NY & NJ	Transmittal No.	00064
	Two Gateway Center	Job No.	2030WO12
	15th Floor	Project	PANY/NJ-bt-200.200 WO 12
	Newark, NJ 07102		South Wing Emergency Stair Repairs
Attention	Ka Kei Chan		
Phone No.	973-792-4629 Fax 973-792-4602		

We are sending you herewith the following: ☒ Drawings ☒ Shop Drawings ☐ Samples ☐ Specifications ☒ Other:

Via: ☒ Attached ☐ Separate Cover Via Mail

Quantity	Drawing/Submittal No.	Description	Action
9	04100-002A Rev.1	Dwg: Title: Geo.Schofield Test Report 107 Mason Desc: Geo.Schofield Test Report 107 Mason	3

RECEIVED NOV 16 2009

Remarks:

cc: P. Salvatore; A. Kaprielian/PANYNJ

Signed Anthony Carnabuci III

By Anthony J. Carnabuci

Date 11/12/2009

625 Eighth Avenue
2nd Flr, North Building
New York, NY 10018

Phone
212-629-6187
Fax
212-629-9243

VRH Construction Corp

[illegible]

New York, NY [illegible]

Fax [illegible]

SUBMITTAL
NO. 04100-002A
PACKAGE NO: 04100

TITLE: Geo.Schofield Test Report 107 Mason

PROJECT: PANY/NJ-bt-200 200 WO 12

REQUIRED START: [illegible]

REQUIRED FINISH: 11/2/2009

DRAWING:

STATUS: 3

BIC: PANYNJ

DAYS HELD: 0

DAYS ELAPSED: 24

DAYS OVERDUE: 10

RECEIVED FROM		SENT TO		RETURNED BY		FORWARDED TO	
TG	JB	PANYNJ	KC	PANYNJ	KC	TG	JB

Revision No.	Description / Remarks	Received	Sent	Returned	Forwarded	Status	Sepias	Prints	Drawing Date	Held	Elapsed
000	Geo.Schofield Test Report 107 Mason	10/19/2009	10/19/2009			3	0	9		24	24
001	Geo.Schofield Test Report 107 Mason			11/10/2009	11/10/2009	7	0	0		0	0
002	Geo.Schofield Test Report 107 Mason	11/12/2009	11/12/2009			3	0	9		0	0

St Clair Trucking

2 RASPBERRY LANE
NESCONSET NY 11767
(631) 265-1397
(516) 983-9513

IMPERIA BROTHERS INC.
57 CANAL ROAD
PELHAM MANOR NY 10803

Re:

Cc:

This letter is to certify that the Fine sand delivered to Your plant passes the ASTM C-144 . The material is picked Up at Roanoke sand & gravel 104 ROCKY POINT ROAD MIDDLE ISLAND NY 11953.

Sieve Analysis

Sieve size	Percent Passing	ASTM C-144 Specificatios
4	100.00	100
8	98.7	97-100
16	93.3	70-100
30	72.8	40-75
50	31.4	10-35
100	10.1	2-15

Yours truly

Thomas stclair

04100-002A
200.200 W.O. 12

Materials Engineering Unit

241 Erie Street, Room 234
Jersey City, NJ 07310
Tel: 201-216-2952 **Fax:** 201-216-2949

THE PORT AUTHORITY OF NY & NJ

TRANSMITTAL
No. 00050

PROJECT: WO12 South Wing Emerg. Stair Repairs

DATE: 12/4/2009

TO: VRH Construction Corp.
c/o Port Authority of NY & NJ
625 Eight Ave. 2nd Flr. North Bldg
New York, NY 10018

CONTRACT: PABT-200.200 WO12

ATTN: **Anthony Carnabuci**

	STATUS	LEGEND:
☐ Shop Drawings	Approved (APP)	New Item (NEW)
☑ Letter	Approved as Corrected (AAC)	Not Approved (NA)
☐ Prints	Approved as Noted (AAN)	Not Reviewed (NR)
☐ Change Order	For Record Only (FRO)	Review With Comments (RWC)
☐ Plans	For Your Information (FYI)	Review With No Comments (RWNC)
☐ Samples	Incomplete (INC)	Superseded (SUPS)
☐ Specifications		
☑ Other: Made from Submittal	☐ Attached ☐ Separate Cover Via: Mail	
Review and Comment		

SUBMITTAL	REV.	DATE	DESCRIPTION	Remark	STATUS
02551-0003	R001	12/2/2009	Desc: I-5A Top Course (6 percent Asphalt Cement & 3 percent Marshall Air Voids) PG64-22 (Section 02551), Newark Asphalt Corp., Batch Plant, Newark, NJ		APP

Remarks: Approvals shall not relieve the Contractor of any responsibility as required by the Contract or waive any further authority of the Engineer or modify or waive any provision of the subject Contract with regard to this material(s) or its approval.

Material(s), which do not conform to the contract documents, will be subject to rejection at the job site by the Resident Engineer.

If you have any questions, please call John Varrone of my staff at (201) 216-2976. Our fax number is (201) 216-2949.

CC: P. Salvatore w/att., A.Kaprielian w/att., J. Varrone, MF

Signed:
Casimir Bognacki, P.E.
Chief of Materials Engineering

Expedition ®

LETTER OF TRANSMITTAL

JV

Action Key
1 For your records and/or use
2 For price quotation
3 For approval
4 Approved/Reviewed
5 Approved as noted: Re-submission not required
6 Approved as noted: Revise and re-submit
7 Rejected: Re-submit per contract documents

VRH CONSTRUCTION CORP.
General Contractors & Construction Managers

To	The Port Authority of NY & NJ	Transmittal No.	00067
	Two Gateway Center	Job No.	2030WO12
	15th Floor	Project	PANY/NJ-bt-200.200 WO 12
	Newark, NJ 07102		South Wing Emergency Stair Repairs
Attention	Ka Kei Chan		
Phone No.	973-792-4629 Fax 973-792-4602		

We are sending you herewith the followir ☒ Drawings ☒ Shop Drawings ☐ Samples ☐ Specifications ☒ Other:

Via: ☒ Attached ☐ Separate Cover Via Mail

Quantity	Drawing/Submittal No.	Description	Action
9	02551-003 Rev. 1	Dwg: Title: PA I-5A Mix Design from Newark Desc: PA I-5A Mix Design from Newark	3

RECEIVED NOV 25 2009

Remarks:

cc: P. Salvatore; A. Kaprielian/PANYNJ

Signed Anthony Carnabuci for

By Anthony J. Carnabuci

Date 11/24/2009

RECEIVED
NOV 25 2009
BY: Salvatore

625 Eighth Avenue
2nd Flr, North Building
New York, NY 10018

Phone
212-629-6187
Fax
212-629-9243

VRH Construction Corp.

625 Eighth Avenue
2nd Flr, North Building
New York, NY 10018

Phone: 212-629-6187
Fax: 212-629-9243

SUBMITTAL
NO. 02551-003
PACKAGE NO: 02551

TITLE: PA I-5A Mix Design from Newark
PROJECT: PANY/NJ-bt-200.200 WO 12

DRAWING:
STATUS: 3
BIC: PANYNJ

REQUIRED START: 10/22/2009
REQUIRED FINISH: 11/5/2009

DAYS HELD: 0
DAYS ELAPSED: 33
DAYS OVERDUE: 19

RECEIVED FROM	SENT TO	RETURNED BY	FORWARDED TO
TG	JB	PANYNJ	KC	PANYNJ	KC	TG	JB

Revision No.	Description / Remarks	Received	Sent	Returned	Forwarded	Status	Sepias	Prints	Drawing Date	Held	Elapsed
000	I-5A Design Mix from Grace	10/22/2009	10/22/2009			3	0	9		33	33
002	PA I-5A Mix Design from Newark	11/24/2009	11/24/2009			3	0	9		0	0
001	I-5A Design Mix from Grace			11/20/2009	11/20/2009	7	0	0		0	0

Expedition®

THE PORT AUTHORITY OF NY & NJ
ENGINEERING DEPARTMENT - MATERIALS ENGINEERING DIVISION
SUBMITTED ASPHALT CONCRETE JOB MIX FORMULA

JOB DESCRIPTION: The Port Authority Bus Terminal - South Wing Emergency Stair Repairs
CONTRACT #: BT-200.200 Work Order 12
SUBMITTAL #: 02551-0003 R001
MIX TYPE: I-5A Top Course (6% Asphalt Cement & 3% Marshall Air Voids) PG64-22 (Section 02551)
CONTRACTOR: VRH Construction Corp. (Sub: Carullo Construction Corp.)
SUPPLIER: Newark Asphalt Corp. LOCATION: Newark, NJ
PLANT TYPE: Batch Plant
LOT SIZE: A Day's Production (300 Tons Minimum, 2000 Tons Maximum)(Mat & Joint Cores)
PAYMENT SHEET: Marshall Air Void And In-Place Density Deduction (Compensation In Excess Of 100 %) (PA 3597A, 7-95)
First sublot can be excluded from M.A.V. payment computation, if mix was not produced during preceding 24 hours.

JOB MIX FORMULA GRADATION (% PASSING)

SIEVE SIZE	J.M.F. GRAD.	GENERAL SPEC.	ACTION LIMITS	SUSPENSION LIMITS
1 1/4"	100.0	100.0 - 100.0	100.0 - 100.0	100.0 - 100.0
1"	100.0	100.0 - 100.0	100.0 - 100.0	100.0 - 100.0
3/4"	100.0	100.0 - 100.0	100.0 - 100.0	100.0 - 100.0
1/2"	99.6	100.0 - 100.0	100.0 - 100.0	100.0 - 100.0
3/8"	92.4	80.0 - 100.0	88.0 - 96.0	83.0 - 100.0
# 4	57.4	55.0 - 85.0	53.0 - 61.0	48.0 - 66.0
# 8	36.3	32.0 - 42.0	32.0 - 40.0	28.5 - 43.5
# 16	28.5	20.0 - 30.0	25.0 - 33.0	21.5 - 36.5
# 30	20.4	12.0 - 22.0	16.0 - 24.0	12.5 - 27.5
# 50	13.1	7.0 - 16.0	10.0 - 16.0	8.5 - 17.5
# 100	7.0	3.0 - 12.0	5.0 - 9.0	4.0 - 10.0
# 200	3.8	2.0 - 6.0	2.0 - 6.0	1.0 - 7.0
ASPHALT CEMENT	6.00	5.8 - 6.5 Extraction	5.7 - 6.3	5.3 - 6.7

MARSHALL CRITERIA

	DESIGN	DESIGN REQUIREMENTS	PRODUCTION REQUIREMENTS
STABILITY		2150 Minimum	1800 Minimum
FLOW	10.7	8.0 - 16.0	8.0 - 16.0
AIR VOIDS (%)	3.0	2.3 - 3.7	1.5 - 4.5
VOIDS FILLED WITH ASPHALT (%)	**82.5**	70.0 - 80.0	70.0 - 80.0
VOIDS IN MINERAL AGGREGATE (%)	17.1	16.0 Minimum	16.0 Minimum
IN-PLACE DENSITY (%)			96.3
IN-PLACE JOINT DENSITY (%)			93.3

MATERIAL SOURCES

TYPE & SIZE	J.M.F. %	MANUFACTURER / LOCATION	APPROVED
BIN # 3 - 3/8" STONE	27.7%	Weldon Quarry, Hopatcong, NJ	Yes
BIN # 2 - 1/4" STONE	29.7%	Weldon Quarry, Hopatcong, NJ	Yes
BIN # 1 - (50%) STONE SAND	17.8%	Weldon Quarry, Hopatcong, NJ	Yes
BIN # 1 - (50%) NATURAL SAND	17.8%	Clayton Sand Co., Lakewood, NJ	Yes
FILLER - RECLAIMED FINES	1.0%	Newark Asphalt Corp. or McNeil Brothers	Yes
AC - PG64-22	6.00%	NuStar Refining, LLC., Bayonne, NJ	Yes

MIX TEMPERATURE LEAVING PLANT: 275 - 325 Degrees F
MARSHALL COMPACTION TEMPERATURE: 275 - 295 Degrees F

REMARKS: The approval is based upon the satisfactory performance of the Job Mix Formula on Contract Number BT-200.001 Work Order # 12. The final acceptance will be based upon the satisfactory performance of the Job Mix Formula during the first day of plant production.

JOB MIX FORMULA: Approved, appropriate mix to be used as shown on contract drawings.

DATE: 11/30/09

ASPHALT LABORATORY SUPERVISOR

MATERIALS ENGINEERING UNIT SUBMITTAL ROUTING SLIP

		Review Checked Item
CONTRACT NO: BT-200.200	W.O. 12	√
WTC TOWER ONE	FORWARD COMENTS	
WTC MEMORIAL	FORWARD COMMENTS	
VSC WTC-724.078	LIVELINK	
VSC WTC-724.078 T3		

CC LINE:

P. SALVATORE	A. KAPRIELIAN		

SUBMITTAL(S)

02551-0003 R001			

	NAME	DATE IN	DUE DATE	DATE PROCESSED
LOGGED IN BY:	JS	11/25/09	12/11/09	
REVIEWER:	JV			
PROCESSED BY:	JS			12/2

NOTES:

☐ FOR LIVELINE UPLOAD AND DISTRIBUTION
PLEASE FORWARD COMMENTS TO: CAS & JOSEPHINE. RETURN SUBMITTAL FOR FILING.

☐ FOR WTC TOWER ONE & MEMORIAL DISTRIBUTION
PLEASE FORWARD COMMENTS TO CAS, DAN, MARK & JOSEPHINE. RETURN SUBMITTAL FOR FILING.

*If a submittal(s) date in and/or due date fall within a holiday period, add the appropriate number of days to equal the allotted 10-day period.

Form LB-251 A 8/92

NEW JERSEY DEPARTMENT OF TRANSPORTATION

PRODUCER'S ANALYSIS OF MATERIALS AND JOB MIX FORMULA

DATE 11-24-09

PRODUCER NEWARK ASPHALT CORP. PLANT LOCATION NEWARK N.J.

PROJECT PORT AUTHORITY BUS TERMINAL - SO. WING EMERGENCY STAIR REPAIR W.O. 12

CONTRACTOR GRENDAIER

MIX NUMBER PA.I-SA COURSE SURFACE BATCH SIZE 9000

VERIFICATION MARSHALL PLUG – LABORATORY SERIAL NO. _____ CT 2512

JOB MIX FORMULA				
	%	POUNDS	COMPONENTS – PRODUCER AND LOCATION	
BIN 5				
BIN 4				
BIN 3	27.7	2493	WELDON - LAKE HOPATCONG, N.J.	
BIN 2	29.7	2673	WELDON - LAKE HOPATCONG, N.J.	
BIN 1 50/50 BLEND	35.6	3204	WELDON - LAKE HOPATCONG, NJ. CLINTON - LAKEWOOD, N.J.	
FILLER	1.0	90	RECLAIMED FINES / McNEIL BROS LIME	
ASPHALT CEMENT	6.0	540	NU STAR - VALERO	PG 64-22
PI BIN 1			REQUIRED: NON-PLASTIC	

MARSHALL	DESIGN	REQUIREMENTS MINIMUM	REQUIREMENTS MAXIMUM
STABILITY (lbs.)		2150	
FLOW (0.01 in.)	10.7	8	16
AIR VOIDS (%)	3.0	3	5
VMA (%)	17.1	16	
VFA (%)	82.5		
G_T	2.435		
LBS/YDS²/IN.	151.9		

Mix No. B60
3.0% Air Voids

PREPARED BY: NEWARK ASPHALT CORP.	SUBMITTED BY:
SIGNATURE Joseph Riggio	SIGNATURE
TITLE General Manager	TITLE
REPRESENTING (COMPANY) NEWARK ASPHALT CORP.	REPRESENTING (COMPANY) DATE OF INITIAL SUBMISSION FOR CALENDAR YEAR 19

02551-003
200.200 W.O. 12

COMPLIES / DOES NOT COMPLY	DATE	SIGNATURE OF REGIONAL MATERIALS ENGINEER	MATERIALS REGION NO.

9-11

PA I-SA . Low Voids 3.0% BIN GRADATIONS 6.0% AC

SIZE SIEVE	BIN NO. 5 ___%		BIN NO. 4 ___%		BIN NO. 3 29.5 %		BIN NO. 2 31.6 %		BIN NO. 1 37.9 %		FILLER 1.0 %		THEOR. COMB.	SPEC	
	% Pass.	% Batch	% Pass.	% Batch	% Pass.	% Batch	% Pass.	% Batch	% Pass.	% Batch	% Pass.	% Batch		Min.	Max.
50 mm (2")															
38.1 mm (1-1/2")															
25 mm (1")															
19.0 mm (3/4")					100	29.5	100	31.6	100	37.9	100	1.0			
12.5 mm (1/2")					98.6	29.1	100	31.6	100	37.9	100	1.0	99.6	100	
9.5 mm (3/8")					74.1	21.9	100	31.6	100	37.9	100	1.0	92.4	80	100
4.75 mm (#4)					0.3	0.9	55.7	17.6	100	37.9	100	1.0	57.4	55	85
2.36 mm (#8)					0.2	0.6	1.5	0.5	90.2	34.2	100	1.0	36.3	32	42
1.1 mm (#16)					0.2	0.6	0.9	0.1	70.8	26.8	100	1.0	28.5	20	30
600 um (#30)					0.1	0.3			50.4	19.1	100	1.0	20.4	12	22
300 um (#50)									31.8	12.1	98	1.0	13.1	7	16
150 um (#100)									15.8	6.0	96	1.0	7.0	3	12
75 um (#200)									7.3	2.8	97	1.0	3.8	2	6

STOCKPILE GRADATIONS

SIZE SIEVE	SIZE NO ___ ___%		SIZE NO ___ ___%		SIZE NO ___ ___%		SIZE NO ___ ___%		SIZE NO ___ ___%		FILLER ___%		THEOR. COMB.	SPEC	
	% Pass.	% Batch	% Pass.	% Batch	% Pass.	% Batch	% Pass.	% Batch	% Pass.	% Batch	% Pass.	% Batch		Min.	Max.
50 mm (2")															
38.1 mm (1-1/2")															
25 mm (1")															
19.0 mm (3/4")															
12.5 mm (1/2")															
9.5 mm (3/8")															
4.75 mm (#4)															
2.36 mm (#8)															
1.1 mm (#16)															
600 um (#30)															
300 um (#50)															
150 um (#100)															
75 um (#200)															

THE PORT AUTHORITY OF NEW YORK AND NEW JERSEY
ENGINEERING DEPARTMENT
MATERIALS ENGINEERING SECTION / CONSTRUCTION DIVISION

PYCNOMETER TEST RESULTS

PLANT: NEWARK ASPHALT CORP.

LOCATION: NEWARK NJ.

CONTRACT No.:

MIX TYPE: PA I-SA WITH 50/50 BLEND LOT No.

CONTRACTOR (SUB ____)

LINE		TEST #	1A	1B	2A	2B
		DATE:	6-6-05	6-6-05	6-06-05	6-06-05
1	TARE + MIX		6.0% A/C	6.0% A/C	5.9% AC	5.9% A
2	TARE		-	-	-	-
3	SAMPLE WEIGHT (1 - 2)		2063.4	1962.2	2044.1	1937.8
4	PYC. + WATER		+ 7457.0	+ 7505.7	+ 7457.9	+ 7507.4
5	TOTAL (3 + 4)		9520.4	9467.9	9502.0	9445.2
6	PYC. + WATER + MIX		8697.5	8688.2	8684.6	8671.7
7	DISPLACED WATER WT. (5 - 6)		822.9	779.7	817.4	773.5
8	TEMPERATURE OF WATER		74°F	74°F	74°F	74°F
9	MAX. SP. GR. (3 / 7)		2.507	2.517	2.500	2.505
				2.512		

Q.C. TECHNICIAN JOSEPH BUGGICA P.A. INSPECTOR 2.502

REMARKS:

THE PORT AUTHORITY OF NY & NJ

ENGINEERING DEPARTMENT

MATERIALS ENGINEERING DIVISION

COMPUTATION OF PROPERTIES OF ASPHALT MIXTURES

IX TYPE:	PLANT:	CONTRACTOR:	CONTRACT #:	DATE:
PA I-5A WITH 50/50	Newark Asphalt Corp.			

Specimen Numbers			A.C. %	Height (in.)	Weight - Grams In Air	Weight - Grams S.S.D.	Weight - Grams In Water	Volume cc	Specific Gravity Bulk	Specific Gravity Maximum	A.C. Volume %	Voids - Percent Total Mix	Voids - Percent Filled	V.M.A. %	Unit Wt. Total Mix lbs./cu.ft.	Stability - Lbs. Corr. Ratio	Stability - Lbs. Measured	Stability - Lbs. Converted	Flow .01 in.
A			B	C	D	E	F	G	H	I	J	K	L	M	N	O	P	Q	R
Test #	Comp. Temp.	Plug #						(E - F)	(D/G)		(B x H) 1.03	(100-100(H/I))	J x 100 / (J + K)	(J / L) x 100	H x 62.4				
											A.C. S.G.								
	295	1A			1245.0	1245.4	744.8	500.6	2.487							1.04	2850	2964	14.0
	285	1B	6.0		1242.0	1242.8	742.6	500.2	2.483							1.04	3000	3120	14.5
	285	1C		2"	1242.0	1242.6	743.8	498.8	2.490							1.04	2750	2860	12.5
								Averages	2.487	2.512	14.92	1.0	93.7	15.92	155.18			2981	13.7
	295	2A			1243.3	1244.5	736.0	508.5	2.445							1.04	2550	2652	11.5
	285	2B	5.9		1248.3	1249.4	742.0	507.4	2.460							1.04	3000	3120	12.5
	275	2C		2"	1258.6	1259.6	744.9	514.7	2.445							1.00	—	2300	12.5
								Averages	2.450	2.502	14.45	2.0	86.78	16.65	152.9			2691	12.2
	280	3A			1249.0	1250.2	739.7	510.5	2.447							1.00	—	2650	13.0
	280	3B	5.9		1249.8	1251.0	742.0	509.0	2.455							1.00	—	2325	12.[illegible]
	280	3C		2"	1245.6	1246.4	739.7	506.7	2.458							1.04	2475	2574	11.[illegible]
								Averages	2.453	2.508	14.47	2.2	86.80	16.67	153.1			2516	12.[illegible]
	280	4A			1248.7	1251.2	736.0	515.2	2.423							1.00	—	2050	11.[illegible]
	280	4B	5.8		1245.7	1247.6	736.3	511.3	2.436							1.00	—	1925	9.[illegible]
	280	4C		2"	1247.0	1247.6	737.8	509.8	2.446							1.00	—	2325	11.[illegible]
								Averages	2.435	2.513	14.12	3.0	82.47	17.12	151.9			2100	10.[illegible]
								Daily Averages										2572	12.[illegible]
								Specifications											

A.C. Technician :

A. Technician :

ot # :

Remarks :

11/24/2009 TUE 12:05 [TX/RX NO 6773] 005

Form LB-251-c 5/84

PRODUCERS ANALYSIS OF MATERIALS AND JOB MIX FORMULA
TEST PROPERTY CURVES

MIX NUMBER P.A I-5 A - low Voids

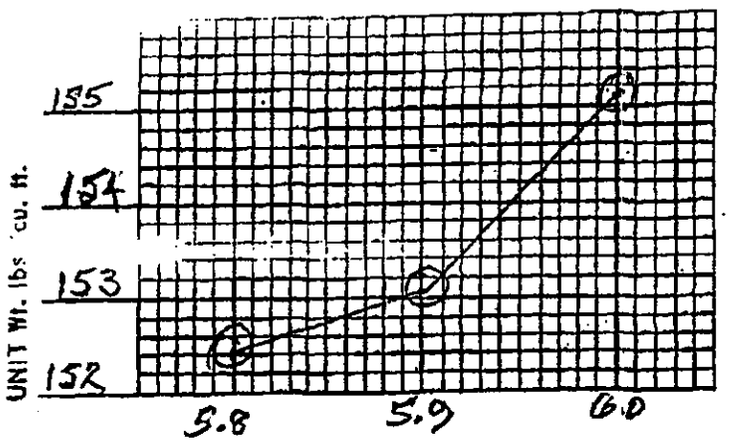

PERCENT ASPHALT

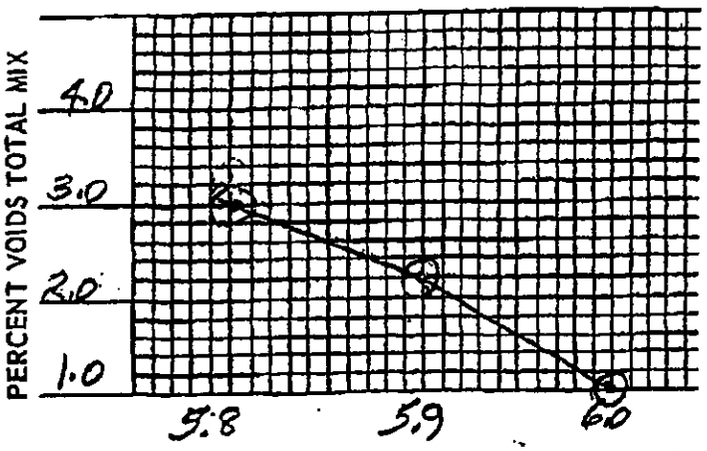

PERCENT ASPHALT

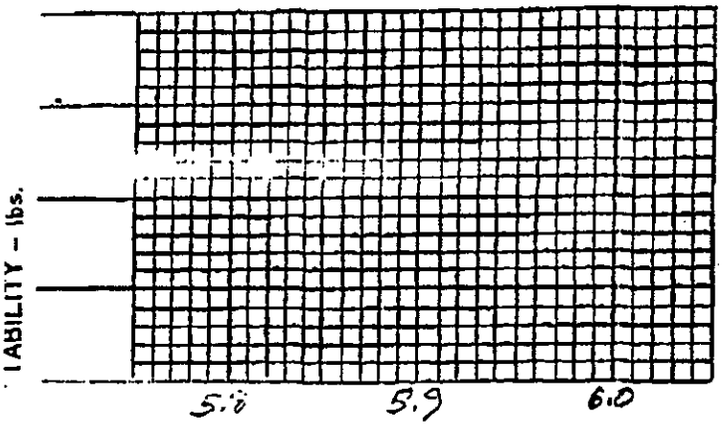

PERCENT ASPHALT

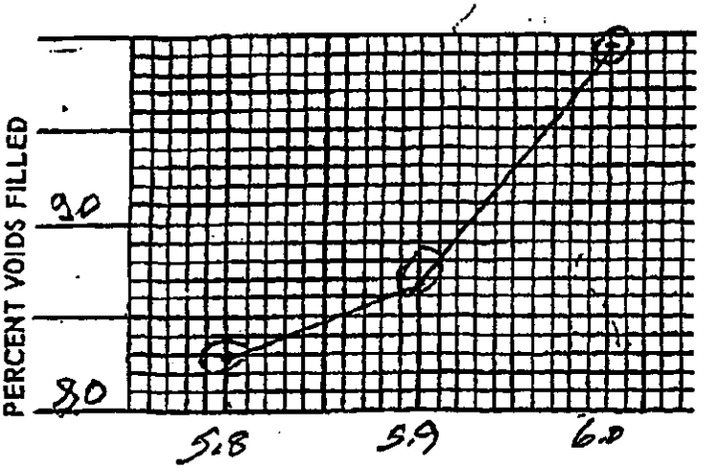

PERCENT ASPHALT

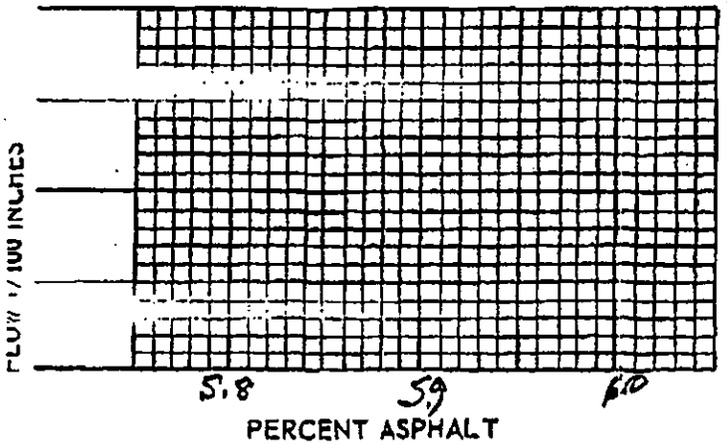

PERCENT ASPHALT

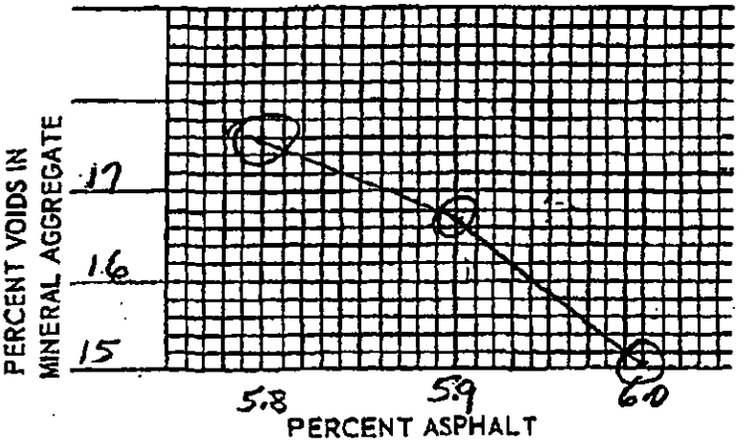

PERCENT ASPHALT

REMARKS:

MS – 2

Max. Unit Wgt. _____

Max. Stab. _____

Center Voids Spec. _____

Opt. Asph. Cont. Ave. _____

GRADATION CHART

SIEVE SIZES RAISED TO 0.45 POWER

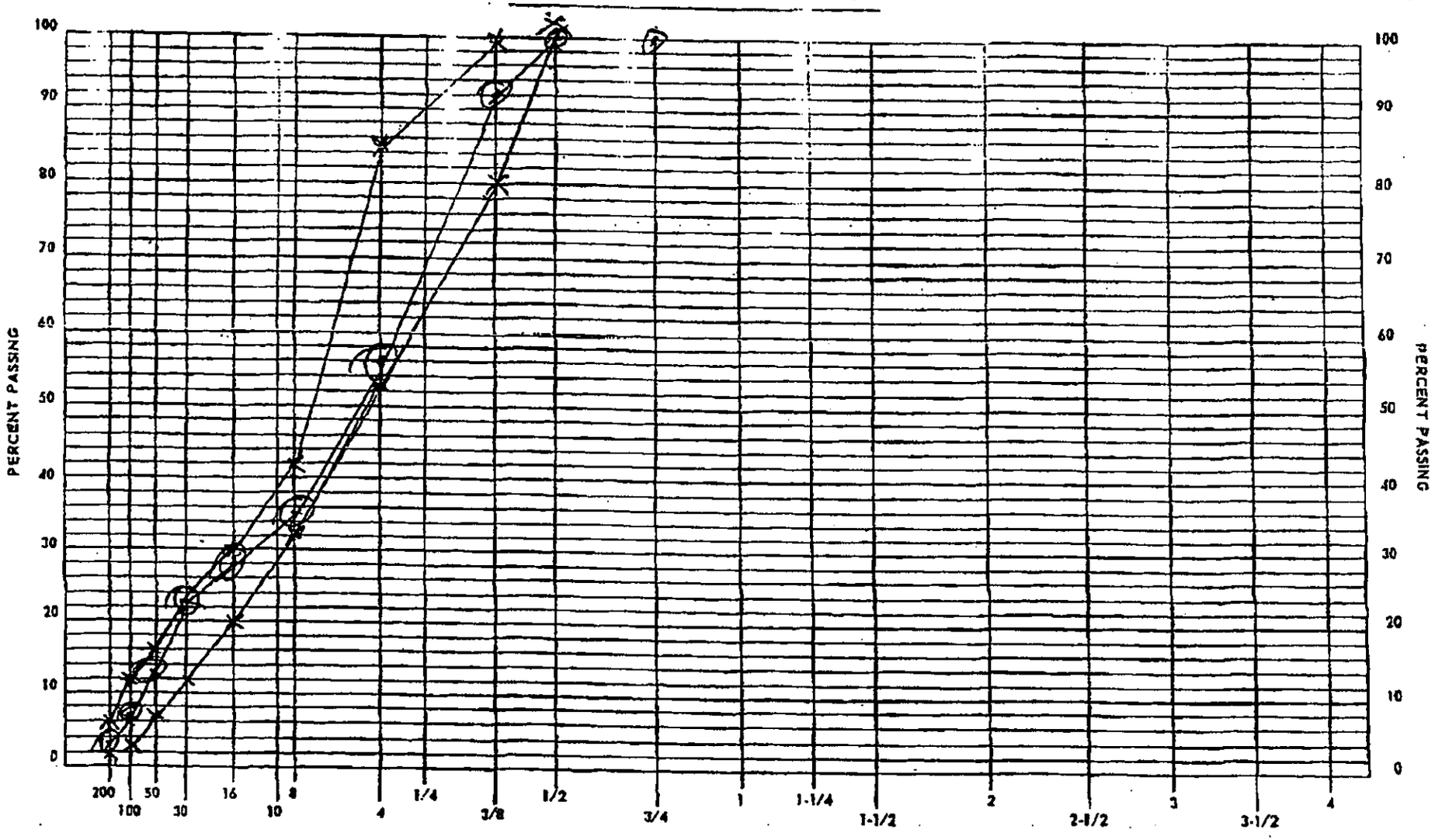

Identification of Gradations:

PA I-5A - Low Voids - 3%

11/24/2009 TUE 12:05 [TX/RX NO 6773] 0007

Materials Engineering Unit

241 Erie Street, Room 234
Jersey City, NJ 07310
Tel: 201-216-2952 **Fax:** 201-216-2949

THE PORT AUTHORITY OF NY & NJ

TRANSMITTAL
No. 00065

PROJECT: WO12 South Wing Emerg. Stair Repairs

DATE: 6/22/2010

TO: VRH Construction Corp.
c/o Port Authority of NY & NJ
625 Eight Ave. 2nd Flr. North Bldg
New York, NY 10018

CONTRACT: PABT-200.200 WO12

ATTN: **Anthony Carnabuci**

	STATUS LEGEND:	
☐ Shop Drawings	Approved (APP)	New Item (NEW)
☐ Letter	Approved as Corrected (AAC)	Not Approved (NA)
☐ Prints	Approved as Noted (AAN)	Not Reviewed (NR)
☐ Change Order	For Record Only (FRO)	Review With Comments (RWC)
☐ Plans	For Your Information (FYI)	Review With No Comments (RWNC)
☐ Samples	Incomplete (INC)	Superseded (SUPS)
☐ Specifications		
☑ Other: Made from Submittal	☐ Attached ☐ Separate Cover Via: Mail	
	Review and Comment	

SUBMITTAL	REV.	DATE	DESCRIPTION	Remark	STATUS
03200-0005	R000	6/18/2010	10-61 Rapid Mortar	1	APP

Remarks: Approvals shall not relieve the Contractor of any responsibility as required by the Contract or waiver any further authority of the Engineer or modify or waive any provisions of the subject Contract with regard to this material(s) or its approval.

Material(s) which do not conform to the contract documents will be subject to rejection at the job site by the Resident Engineer.

If you have any questions, please call D. Nisraiyya of my staff at (201)216-2977. Our fax number is (201) 216-2949.

CC: P. Salvatore w/att., A. Kaprielian w/att.,
D. Nisraiyya, MEU file

Signed:
Casimir Bognacki, P.E.
Chief of Materials Engineering

Expedition ®

JUN 22 2010

LETTER OF TRANSMITTAL

Action Key

1 For your records and/or use
2 For price quotation
3 For approval
4 Approved/Reviewed
5 Approved as noted: Re-submission not required
6 Approved as noted: Revise and re-submit
7 Rejected: Re-submit per contract documents

VRH
CONSTRUCTION CORP.
General Contractors & Construction Managers

To	The Port Authority of NY & NJ	Transmittal No.	00086
	Two Gateway Center	Job No.	2030WO12
	15th Floor	Project	PANY/NJ-bt-200.200 WO 12
	Newark, NJ 07102		South Wing Emergency Stair Repairs
Attention	Ka Kei Chan		
Phone No.	973-792-4629 Fax 973-792-4602		

We are sending you herewith the following: ☒ Drawings ☒ Shop Drawings ☐ Samples ☐ Specifications ☒ Other:

Via: ☒ Attached ☐ Separate Cover Via Mail

Quantity	Drawing/Submittal No.	Description	Action
9	03200-005	Dwg: Title: 10-61 Rapid Mortar Desc: 10-61 Rapid Mortar	3

RECEIVED MAY 2 7 2010

Remarks:

cc: P. Salvatore; A. Kaprielian/PANYNJ

Signed Anthony Carnabuci (for)

By Anthony J. Carnabuci

Date 5/24/2010

625 Eighth Avenue
2nd Flr, North Building
New York, NY 10018

Phone
212-629-6187
Fax
212-629-9243

VRH Construction Corp.

625 Eighth Avenue
2nd Flr, North Building
New York, NY 10018

Phone: 212-629-6187
Fax: 212-629-9243

SUBMITTAL
NO. 03200-005
PACKAGE NO: 03200

TITLE: 10-61 Rapid Mortar
PROJECT: PANY/NJ-bt-200.200 WO 12
DRAWING:
STATUS: 3
BIC: PANYNJ

REQUIRED START: 5/24/2010
REQUIRED FINISH: 6/7/2010
DAYS HELD: 0
DAYS ELAPSED: 0
DAYS OVERDUE: -14

RECEIVED FROM	SENT TO	RETURNED BY	FORWARDED TO
TG	PANYNJ	KC	PANYNJ	KC	TG	JB

Revision No.	Description / Remarks	Received	Sent	Returned	Forwarded	Status	Sepias	Prints	Drawing Date	Held	Elapsed
000	10-61 Rapid Mortar	5/24/2010	5/24/2010			3	0	9		0	0

BASF

The Chemical Company

PRODUCT DATA

03 01 00 Maintenance of Concrete

10-61 RAPID MORTAR

Rapid-setting cement-based mortar with extended working time

Description

10-61 Rapid Mortar is a one-component shrinkage-compensated cement-based mortar with an extended working time. It is designed for repairing horizontal concrete surfaces.

Yield

0.43 ft³ (0.012 m³) per 50 lb (22.7 kg) bag

When extended 50%: 0.57 ft³ (0.016 m³)

When extended 100%: 0.77 ft³ (0.022 m³)

Packaging

50 lb (22.7 kg) bags

2,500 lb (1,134 kg) bulk bags

Shelf Life

1 year when properly stored

Storage

Store and transport in unopened containers at 60 to 80° F (16 to 27° C) in clean, dry conditions.

Features	Benefits
Extended working time	Can be used for deep or large repairs; allows trowels at elevated temperatures
• Excellent resistance to freeze/thaw	Outstanding durability
Nonshrink based	Volume stability
• Shrinkage compensated	Minimizes cracking from drying shrinkage; reduces stress at the bondline
Can be extended 50% to 100% by weight with 3/8" (9.5 mm) aggregate	Versatile application
• Proprietary cement blend	Bonds to carbonated and noncarbonated concrete substrates

Where to Use

APPLICATION

- Both small and large-scale repairs
- Structural concrete repairs
- Repairing industrial floors
- Bridges
- Parking decks
- Airport runways

LOCATION

- Horizontal surfaces
- Interior or exterior

SUBSTRATE

- Concrete

How to Apply

Surface Preparation

CONCRETE

1. Concrete must be structurally sound and fully cured (28 days).
2. Saw cut the perimeter of the area being patched into a square with a minimum depth of 1/2" (13 mm).
3. Remove all unsound concrete and roughen the surface to a minimum 1/4" (6 mm) profile amplitude.
4. Remove all laitance, oil, grease, curing compounds, and other contaminants that could prevent adequate bond.
5. The concrete substrate should be saturated surface-dry (SSD), without standing water, before application.

03200-005

200.200 W.O. 12

Technical Data

Composition

10-61 Rapid Mortar is a proprietary blend of cement, graded aggregate, shrinkage-compensating agents, and set-control additives.

Compliances

- ASTM C 928

Test Data

The following results were obtained with a water / powder ratio of 5.5 pints (2.6 L) of water to 50 lbs (22.7 kg) of 10-61 Rapid Mortar at 73° F (23° C).

PROPERTY	RESULTS	TEST METHODS
Fresh wet density, lb/ft³ (kg/m³)	130 (2,082)	ASTM C 138
Set time, min, at 72° F (22° C)		ASTM C 191
Initial	50	
Final	80	
Working time, min	25	
Length change, % (µstrain)		ASTM C 928
Drying shrinkage	-0.05 (-500)	
Wetting expansion	+0.03 (+300)	
Coefficient of thermal expansion in/in/° F (cm/cm/° C)	6.8 x 10^{-6} (12.6 x 10^{-6})	CRD C 39
Modulus of elasticity, psi (GPa)	4.6 x 10^{6} (32)	ASTM C 469
Rapid chloride permeability, coulombs	< 300	ASTM C 1202
Freeze-thaw resistance, % RDM, at 300 cycles	100	ASTM C 666
Scaling resistance, at 25 cycles	0 rating; no scaling	ASTM C 672
Slant shear bond strength, psi (MPa)		ASTM C 882, (modified[1])
1 day	2,300 (16)	
28 days	2,600 (18)	
Splitting tensile strength, psi (MPa)		ASTM C 496
1 day	400 (3)	
28 days	450 (3)	
Flexural strength, psi (MPa)		ASTM C 348
1 day	700 (5)	
28 days	850 (6)	
Compressive strength, psi (MPa), 2" cubes		ASTM C 109
3 hrs	3,000 (21)	
1 day	6,000 (41)	
28 days	8,000 (55)	
Compressive strength, psi (MPa), 3 by 6" cylinders, at 28 days	7,400 (51)	ASTM C 39

[1]No bonding agent used; mortar scrubbed into substrate.

All application and performance values are typical for the material, but may vary with test methods, conditions, and configurations.

REINFORCING STEEL

1. Remove all oxidation and scale from the exposed reinforcing steel in accordance with ICRI Technical Guideline No. 03730 "Guide for Surface Preparation for the Repair of Deteriorated Concrete Resulting from Reinforcing Steel Corrosion."

2. For additional protection from future corrosion, coat the prepared reinforcing steel with Zincrich Rebar Primer.

Mixing

1. Add 5-1/2 pints (2.6 L) of clean water to the mixing container for each bag of 10-61 Rapid Mortar. If required, add the correct amount of aggregate to the mixer. Add the powder to the water while continuously mixing with a slow-speed drill and paddle, mortar mixer, or other forced action mixer.

2. Mix for a minimum of 3 minutes until fully homogeneous.

AGGREGATE EXTENSION

1. For repair areas 2 – 4" (51 – 102 mm) in depth, the minimum recommended addition is 15 – 25 lbs (6.8 – 11.4 kg) of 3/8" (10 mm) washed, graded, rounded, SSD, low-absorption, high-density aggregate per 50 lb (22.7 kg) bag.

2. For areas greater than 4" (102 mm) in depth, the minimum recommended addition is 25 – 50 lbs (11.4 – 22.7 kg) of 3/8" (10 mm) washed, graded, rounded, SSD, low-absorption, high-density aggregate per 50 lb bag.

3. The maximum aggregate extension is 50 lbs (22.7 kg) of pea gravel per bag.

4. The performance of 10-61 Rapid Mortar depends on the type, condition, and amount of aggregate added. Rely on trials, testing, and previous experience to determine aggregate suitability.

Application

1. Apply the mixed material onto the prepared saturated surface-dry (SSD) substrate by gloved hand, trowel, or screed. Ensure proper consolidation of the mortar and compaction around reinforcing steel. Minimum application thickness is 1/2" (13 mm).

2. Finish the completed repair, as required, taking care not to overwork the surface.

3. A maximum of 30 minutes should be allowed to mix, place, and finish 10-61 Rapid Mortar at 70° F (21° C).

Clean Up

Clean tools and equipment with clean water immediately after use. Cured material must be removed mechanically.

Curing

Proper curing is extremely important. Cure 10-61 Rapid Mortar immediately after finishing. Use a water-based curing compound that complies with ASTM C 309.

For Best Performance

- Minimum ambient, surface, and material temperature is 50° F (10° C) and rising.
- Do not mix longer than 5 minutes.
- Minimum application thickness is 1/2" (13 mm).
- Consult coating manufacturer for overcoating requirements.
- Make certain the most current versions of product data sheet and MSDS are being used; call Customer Service (1-800-433-9517) to verify the most current version.
- Proper application is the responsibility of the user. Field visits by BASF personnel are for the purpose of making technical recommendations only and not for supervising or providing quality control on the jobsite.

Health and Safety

10-61 RAPID MORTAR

WARNING!

10-61 Rapid Mortar contains silica, crystalline quartz; alumina cement; portland cement; anhydrite ; fly ash; calcium sulfate; silica, amorphous; iron oxide; sulfur trioxide.

Risks

Product is alkaline on contact with water and may cause injury to skin or eyes. Ingestion or inhalation of dust may cause irritation. Contains small amount of free respirable quartz which has been listed as a suspected human carcinogen by NTP and IARC. Repeated or prolonged overexposure to free respirable quartz may cause silicosis or other serious and delayed lung injury.

Precautions

Avoid contact with skin, eyes and clothing. Prevent inhalation of dust. Wash thoroughly after handling. Keep container closed when not in use. DO NOT take internally. Use only with adequate ventilation. Use impervious gloves, eye protection and if the TLV is exceeded or used in a poorly ventilated area, use NIOSH/MSHA approved respiratory protection in accordance with applicable Federal, state and local regulations.

First Aid

In case of eye contact, flush thoroughly with water for at least 15 minutes. In case of skin contact, wash affected areas with soap and water. If irritation persists, SEEK MEDICAL ATTENTION. Remove and wash contaminated clothing. If inhalation causes physical discomfort, remove to fresh air. If discomfort persists or any breathing difficulty occurs or if swallowed, SEEK IMMEDIATE MEDICAL ATTENTION.

Refer to Material Safety Data Sheet (MSDS) for further information.

Proposition 65

This product contains material listed by the State of California as known to cause cancer, birth defects or other reproductive harm.

VOC Content

0 g/L or 0 lbs/gal less water and exempt solvents.

For medical emergencies only, call ChemTrec (1-800-424-9300).

BASF Construction Chemicals, LLC – Building Systems

889 Valley Park Drive
Shakopee, MN, 55379

www.BuildingSystems.BASF.com

Customer Service 800-433-9517
Technical Service 800-243-6739

LIMITED WARRANTY NOTICE. Every reasonable effort is made to apply BASF exacting standards both in the manufacture of our products and in the information which we issue concerning these products and their use. We warrant our products to be of good quality and will replace or, at our election, refund the purchase price of any products proved defective. Satisfactory results depend not only upon quality products, but also upon many factors beyond our control. Therefore, except for such replacement or refund, BASF MAKES NO WARRANTY OR GUARANTEE, EXPRESS OR IMPLIED, INCLUDING WARRANTIES OF FITNESS FOR A PARTICULAR PURPOSE OR MERCHANTABILITY, RESPECTING ITS PRODUCTS, and BASF shall have no other liability with respect thereto. Any claim regarding product defect must be received in writing within one (1) year from the date of shipment. No claim will be considered without such written notice or after the specified time interval. User shall determine the suitability of the products for the intended use and assume all risks and liability in connection therewith. Any authorized change in the printed recommendations concerning the use of our products must bear the signature of the BASF Technical Manager.

This information and all further technical advice are based on BASF's present knowledge and experience. However, BASF assumes no liability for providing such information and advice including the extent to which such information and advice may relate to existing third party intellectual property rights, especially patent rights. In particular, BASF disclaims all CONDITIONS AND WARRANTIES, WHETHER EXPRESS OR IMPLIED, INCLUDING THE IMPLIED WARRANTIES OF FITNESS FOR A PARTICULAR PURPOSE OR MERCHANTABILITY. BASF SHALL NOT BE RESPONSIBLE FOR CONSEQUENTIAL, INDIRECT OR INCIDENTAL DAMAGES (INCLUDING LOSS OF PROFITS) OF ANY KIND. BASF reserves the right to make any changes according to technological progress or further developments. It is the customer's responsibility and obligation to carefully inspect and test any incoming goods. Performance of the product(s) described herein should be verified by testing and carried out only by qualified experts. It is the sole responsibility of the customer to carry out and arrange for any such testing. Reference to trade names used by other companies is neither a recommendation, nor an endorsement of any product and does not imply that similar products could not be used.

For professional use only. Not for sale to or use by the general public.

Form No. 1018980 9/09
Printed on recycled paper including 10% post-consumer fiber.

© 2009 BASF
Printed in U.S.A.

Materials Engineering Unit

241 Erie Street, Room 234
Jersey City, NJ 07310
Tel: 201-216-2952 Fax: 201-216-2949

THE PORT AUTHORITY OF NY & NJ

TRANSMITTAL
No. 00066

PROJECT: WO12 South Wing Emerg. Stair Repairs

DATE: 6/22/2010

TO: VRH Construction Corp.
c/o Port Authority of NY & NJ
625 Eight Ave. 2nd Flr. North Bldg
New York, NY 10018

CONTRACT: PABT-200200 WO12

ATTN: **Anthony Carnabuci**

	STATUS LEGEND:	
☐ Shop Drawings	Approved (APP)	New Item (NEW)
☐ Letter	Approved as Corrected (AAC)	Not Approved (NA)
☐ Prints	Approved as Noted (AAN)	Not Reviewed (NR)
☐ Change Order	For Record Only (FRO)	Review With Comments (RWC)
☐ Plans	For Your Information (FYI)	Review With No Comments (RWNC)
☐ Samples	Incomplete (INC)	Superseded (SUPS)
☐ Specifications		
☑ Other: Made from Submittal	☐ Attached ☐ Separate Cover Via: Mail	
	Review and Comment	

SUBMITTAL	REV.	DATE	DESCRIPTION	Remark	STATUS
03200-0003	R000	6/18/2010	Concrete Mix Design		APP
03200-0004	R000	6/18/2010	Equipment for Concrete Mix	1	NA

Remarks: 1. Provide details and calibration certificates of weighing scales for all materials. Also, address adjustment to required water due to moisture content of aggregate.

Approvals shall not relieve the Contractor of any responsibility as required by the Contract or waiver any further authority of the Engineer or modify or waive any provisions of the subject Contract with regard to this material(s) or its approval.

Material(s) which do not conform to the contract documents will be subject to rejection at the job site by the Resident Engineer.

If you have any questions, please call D. Nisraiyya of my staff at (201)216-2977. Our fax number is (201) 216-2949.

CC: P. Salvatore w/att., A. Kaprielian w/att.,
D. Nisraiyya, MEU file

Signed:
Casimir Bogdacki, P.E.
Chief of Materials Engineering

Expedition ®

JUN 22 2010

LETTER OF TRANSMITTAL

Action Key

1 For your records and/or use
2 For price quotation
3 For approval
4 Approved/Reviewed
5 Approved as noted: Re-submission not required
6 Approved as noted: Revise and re-submit
7 Rejected: Re-submit per contract documents

VRH
CONSTRUCTION CORP.
General Contractors & Construction Managers

To	The Port Authority of NY & NJ	Transmittal No.	00085
	Two Gateway Center	Job No.	2030WO12
	15th Floor	Project	PANY/NJ-bt-200.200 WO 12
	Newark, NJ 07102		South Wing Emergency Stair Repairs
Attention	Ka Kei Chan		
Phone No.	973-792-4629 Fax 973-792-4602		

We are sending you herewith the followin ☒ Drawings ☒ Shop Drawings ☐ Samples ☐ Specifications ☒ Other:

Via: ☒ Attached ☐ Separate Cover Via Mail

Quantity	Drawing/Submittal No.	Description	Action
9	03200-003	Dwg: Title: Concrete Mix Design Desc: Concrete Mix Design	3
9	03200-004	Dwg: Title: Equipment for Concrete Mix Desc: Equipment for Concrete Mix	3

RECEIVED MAY 2 6 2010

Remarks:

cc: P. Salvatore; A. Kaprielian/PANYNJ

Signed Anthony Carnabuci

By Anthony J. Carnabuci

Date 5/20/2010

625 Eighth Avenue
2nd Flr, North Building
New York, NY 10018

Phone
212-629-6187
Fax
212-629-9243

AMERICAN STANDARD
TESTING AND CONSULTING LABORATORIES, INC.
55 Water Mill Lane, Great Neck, NY 11021
PHONE: (516) 466-7105 FAX: (516) 466-7147

CONCRETE MIX DESIGN REPORT

03200-003
200.200 W.O. 12

CLIENT: The Grenadier Corporation
1590 East 233rd Street
Bronx, NY 10466

PROJECT: Bus Terminal 42nd Street & 8th Ave / Contract BT-200.200
New York, NY

STRENGTH REQUIRED: 4000 PSI + 25% Concrete (Conv.)

SUPPLIER: Hand Mix

MATERIALS: Typical as submitted by supplier

CEMENT:	St. Lawrence Type I/II /Holcim	ASTM C-150	BSA 131-87-M
FINE AGGREGATE:	L.I. Natural	ASTM C-33	
COARSE AGGREGATE	Tilcon - CP	ASTM C-33	
WATER:	Potable	ASTM C-94	
ADMIXTURE #1:		ASTM	
ADMIXTURE #2:		ASTM	

AGGREGATE GRADATION - Passing Percent Finer

Sieve Size	F. A. (sand)	C.A. #67(stone)
1 1/2"	—	—
1"	—	100.0
3/4"	—	95.9
1/2"	—	—
3/8"	100.0	37.6
1/4"	—	—
#4	95.1	6.8
#8	88.0	1.2
#16	77.0	—
#30	52.3	—
#50	17.9	—
#100	2.6	—
Fineness Modules	2.67	6.59
Specific weight	2.64	2.81
Unit weight dry Rodded	97.2	103.4
Colometric Test	clear	

AMERICAN STANDARD
TESTING AND CONSULTING LABORATORIES, INC.
55 Water Mill Lane, Great Neck, NY 11021
PHONE: (516) 466-7105 FAX: (516) 466-7147

CLIENT: The Grenadier Corporation
1590 East 233rd Street
Bronx, NY 10466

PROJECT: Bus Terminal 42nd Street & 8th Ave / Contract BT-200.200
New York, NY

STRENGTH REQUIRED : 4000 PSI+25% Concrete (Conv.)

TEST: Mix Design

METHOD: A.C.I.

SAMPLED BY: American Standard
Testing and Consulting Laboratories, Inc

DELIVERED BY: ASTC

FINAL MIX DESIGN - DRY BATCH WEIGHTS (LBS/ 9.0 CuFt)

1	188.0	2.00	508.3	616.7	10.2	N/A	N/A	N/A	155.3	3.00	0.452	1.20
2	203.7	2.17	486.7	616.7	10.5	N/A	N/A	N/A	154.9	3.00	0.429	1.40
3	219.3	2.33	466.7	616.7	10.8	N/A	N/A	N/A	154.8	3.50	0.410	1.00
4	235.0	2.50	453.3	616.7	11.2	N/A	N/A	N/A	155.3	3.25	0.397	1.10

COMPRESSIVE STRENGTH TEST - P.S.I. (6" x 12" Cylinders)

1	3188	3053	3121	4365	4178	4292	4239	4269
2	3570	3498	3534	4833	4730	4618	4803	4746
3	4161	4072	4117	5419	5468	5348	5423	5415
4	4582	4489	4536	5841	5966	6010	5984	5950

AMERICAN STANDARD
TESTING AND CONSULTING LABORATORIES, INC
55 Water Mill Lane, Great Neck, NY 11021
PHONE: (516) 466-7105 FAX: (516) 466-7147

CLIENT: The Grenadier Corporation
1590 East 233rd Street
Bronx, NY 10466

PROJECT: Bus Terminal 42nd Street & 8th Ave / Contract BT-200.200
New York, NY

STRENGTH REQUIRED: 4000 PSI + 25% Concrete (Conv.)

TEST: MIX DESIGN

METHOD: A.C.I.

SAMPLE BY: AMERICAN STANDARD TESTING AND CONSULTING, LABORATORIES, INC. **DELIVERED BY:** ASTC

RECOMMENDED MIX DESIGN For 9.0 CUFT

CEMENT	219.3 LBS.	**SACKS**	2.33
FINE AGGREGATE	466.7 LBS.		
COARSE AGGREGATE	616.7 LBS.		
WATER	10.8 GALS.		
W/C RATIO	0.410		
SLUMP	3" +/- 1"		
AIR ENTRAINED	0% - 2%		
ADMIXTURE #1	N/A OZS.		
ADMIXTURE #2	N/A OZS.		
UNIT WEIGHT	148.1 PCF		

STATE OF NEW YORK
BRUCE R. PUMO
LICENSED PROFESSIONAL ENGINEER
NO. 084272

AMERICAN STANDARD
TESTING AND CONSULTING LABORATORIES, INC

AMERICAN STANDARD
TESTING AND CONSULTING LABORATORIES, INC
55 Water Mill Lane, Great Neck, NY 11021
PHONE: (516) 466-7105 FAX: (516) 466-7147

CLIENT : The Grenadier Corporation
1590 East 233rd Street
Bronx, NY 10466

PROJECT : Bus Terminal 42nd Street & 8th Ave / Contract BT-200.200
New York, NY

STRENGTH REQUIRED : 4000 PSI + 25% Concrete (Conv.)

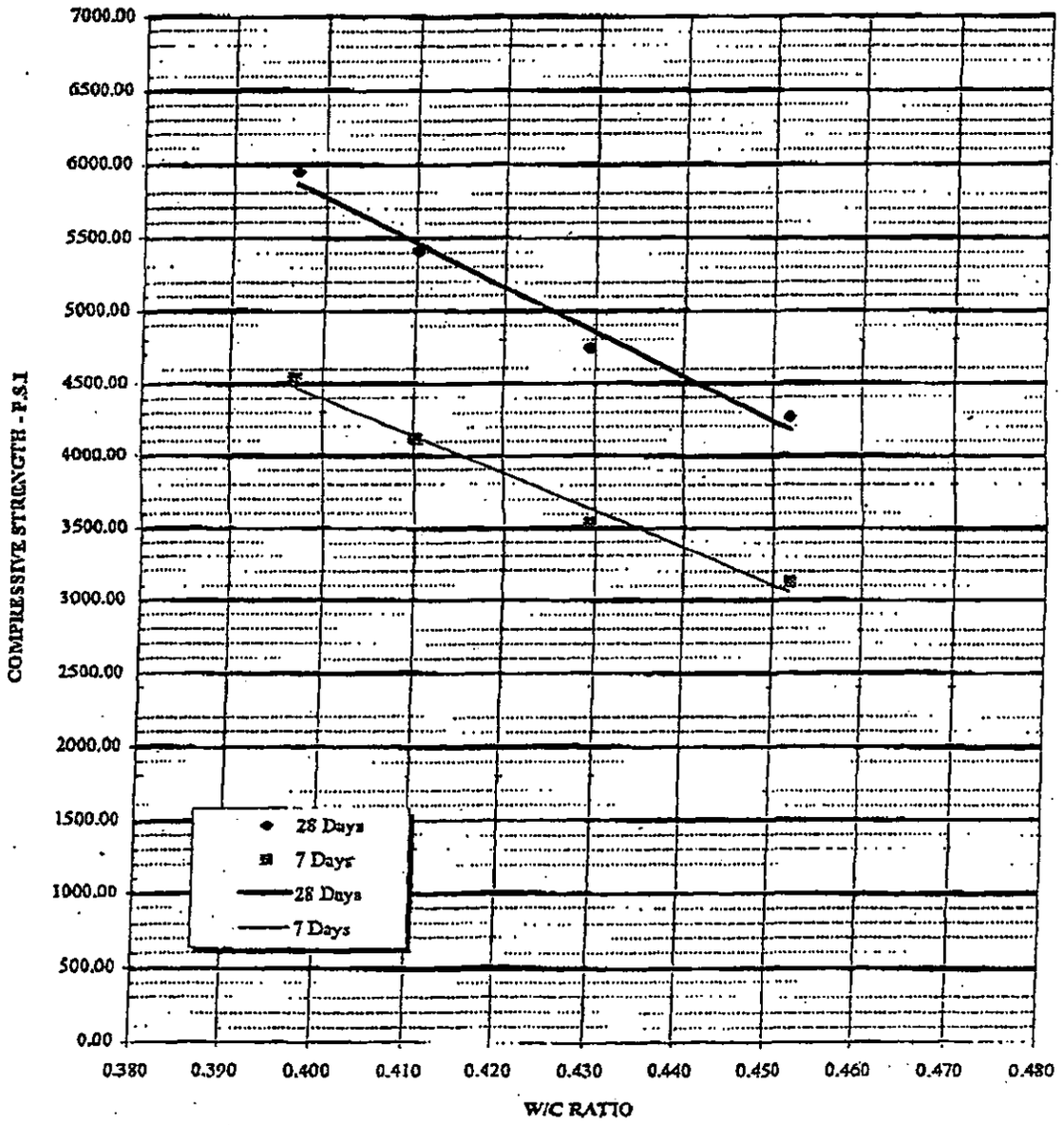

VRH Construction Corp.

625 Eighth Avenue
2nd Flr, North Building
New York, NY 10018

Phone: 212-629-6187
Fax: 212-629-9243

SUBMITTAL NO. 03200-004
PACKAGE NO: 03200

TITLE: Equipment for Concrete Mix
PROJECT: PANY/NJ-bt-200.200 WO 12

DRAWING:
STATUS: 3
BIC: PANYNJ

REQUIRED START: 5/20/2010
REQUIRED FINISH: 6/3/2010

DAYS HELD: 0
DAYS ELAPSED: 0
DAYS OVERDUE: -14

RECEIVED FROM	SENT TO	RETURNED BY	FORWARDED TO
TG	JB	PANYNJ KC	TG JB

Revision No.	Description / Remarks	Received	Sent	Returned	Forwarded	Status	Sepias	Prints	Drawing Date	Days Held	Days Elapsed
000	Equipment for Concrete Mix	5/20/2010	5/20/2010			3	0	9		0	0

THE GRENADIER
CORPORATION
Pride in Our Reputation

1590 E. 233rd Street
Bronx, New York 10466
(718) 324-3700

May 20, 2010

Project: Port Authority NY & NJ Bus Terminal
42nd Street & 8th Avenue, New York, NY
Contract: BT-200.200 Work Order # 12

Equipment Used

- Concrete mixer IMER Workman 420 II
- Various small tools

Procedure for Mixing Concrete

Use the data sheet from the mix design lab.

1. Weigh out proportions for a 9 cubic foot batch of concrete.
2. Put half of the coarse aggregate and half of water into the mixer
3. Start the mixer.
4. Add about half the fine aggregate.
5. Carefully add all the cement with the mixer running. Keep the dust to the minimum!
6. Mix until all the cement is blended in.
7. Add the rest of the coarse and fine aggregate.
8. Mix for awhile.
9. Add the remaining water to produce a workable mix.
10. Mix for three minutes, followed by a three minute rest, followed by a two minutes final mixing.
11. Cast 3 cylinders and pour the rest of the mix into the designated area.

IMER U.S.A. inc.

WORKMAN 420 II MULTIMIXER

Model 1105858

MANUAL INSTRUCTION
and
PARTS LIST

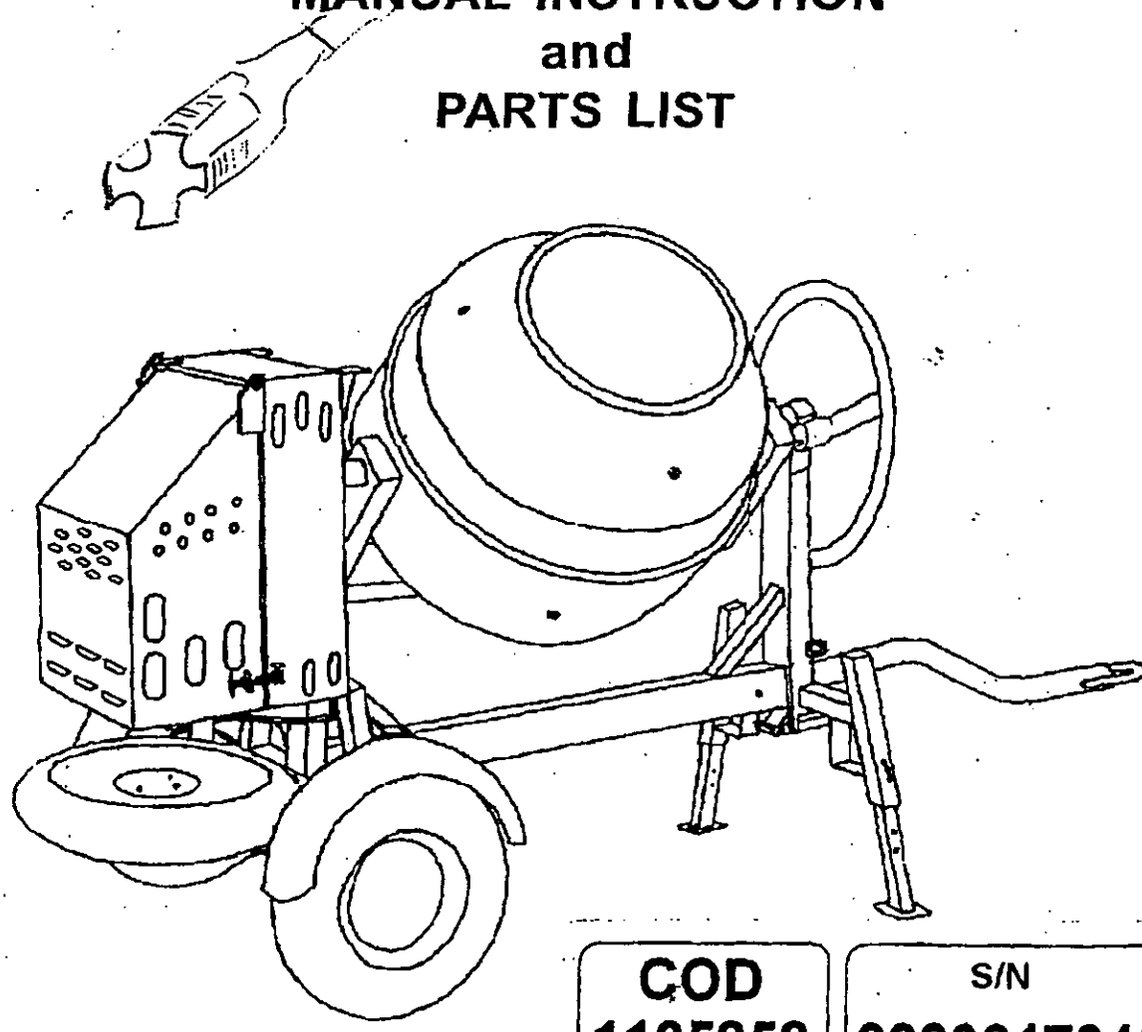

COD	S/N
1105858	0000617342

PESO/POID/WEIGHT/GEWICHT
KG. 282

1105858#0000617342

Manual Part. number 3210517 R01 - 2005/03

Machine serial N°

Write in the serial n° of your machine here

TECHNICAL SPECIFICATIONS
WORKMAN II 420

Drum capacity	14.5 CU. FT.
Batch Output	11 CU. FT.
Drum Diameter	37.4 Inches
Discharge Outlet Height	27 Inches
Pneumatic Wheels	4.50-10 Inches (50 PSI)
Power plants	5.5 HP Honda GX160 2.0 HP electric
Overall Operating Dimensions	83" x 50" x 66.5"
Overall Storage Dimensions	83" x 50" x 55"
Weight	621 LBS (282 Kg)

*Capacity based upon usable volume

Due to Imer U.S.A. 's commitment to Reasearch and Development, specifications are subject to change without notice.

Materials Engineering Unit

241 Erie Street, Room 234
Jersey City, NJ 07310
Tel: 201-216-2952 Fax: 201-216-2949

THE PORT AUTHORITY OF NY & NJ

TRANSMITTAL
No. 00069

PROJECT: WO12 South Wing Emerg. Stair Repairs

DATE: 9/15/2010

TO: VRH Construction Corp.
c/o Port Authority of NY & NJ
625 Eight Ave. 2nd Flr. North Bldg
New York, NY 10018

CONTRACT: PABT-200.200 WO12

ATTN: **Anthony Carnabuci**

		STATUS LEGEND:
☐ Shop Drawings	Approved (APP)	New Item (NEW)
☑ Letter	Approved as Corrected (AAC)	Not Approved (NA)
☐ Prints	Approved as Noted (AAN)	Not Reviewed (NR)
☐ Change Order	For Record Only (FRO)	Review With Comments (RWC)
☐ Plans	For Your Information (FYI)	Review With No Comments (RWNC)
☐ Samples	Incomplete (INC)	Superseded (SUPS)
☐ Specifications		
☑ Other: Made from Submittal	☐ Attached ☐ Separate Cover Via: Mail	
	Review and Comment	

SUBMITTAL	REV.	DATE	DESCRIPTION	Remark	STATUS
05121-0001	R000	9/13/2010	Papp Iron Welding QC Plan	1-6	AAN

Remarks: 1. Submitted QC plan is only approved to perform stair repair work for the subject contract.
2. This approval does not authorize the fabricator to conduct coating. For surface preparation and coating, please submit coating information separately.
3. Submitted welding procedures comply with AWS D1.1 requirements. The GMAW welding procedures do not provide metal transfer mode information. Please note that short circuiting mode will not be permitted for GMAW process.
4. Welders Robert Aimone, William Bickhardt, G. Olekszyyk, Wilson Encarnacion, E. Appolon, E. WojtalaKazimierz Maczka, D. Boatwright, and K. Kaczkowski are approve to weld within the limitations as noted on their welder qualification test records.
5. Submitted CWI certifications for Freddie Shivdat and Paul Preuss are expired. Please submit current copies.
6. PA-MED shall be notified prior to starting of fabrication.

Approvals shall not relieve the Contractor of any responsibility as required by the Contract or waiver any further authority of the Engineer or modify or waive any provisions of the subject Contract with regard to this material(s) or its approval.

Material(s) which do not conform to the contract documents will be subject to rejection at the job site by the Resident Engineer.

If you have any questions, please call D. Wisidagama of my staff at (201)595-4644. Our fax number is (201) 216-2949.

CC: P. Salvatore w/att., A. Kaprielian w/att.,
D. Wisidagama, MEU file

Signed: for Casimir Bognacki, P.E.
Chief of Materials Engineering

Expedition ®

LETTER OF TRANSMITTAL

B2-200.200 WO#12

RECEIVED
AUG 24 2010

Action Key
1 For your records and/or use
2 For price quotation
3 For approval
4 Approved/Reviewed
5 Approved as noted: Re-submission not required
6 Approved as noted: Revise and re-submit
7 Rejected: Re-submit per contract documents

VRH CONSTRUCTION CORP.
General Contractors & Construction Managers

To	The Port Authority of NY & NJ	Transmittal No.	00090
	2 Gateway Ctr.	Job No.	2030WO12
	14th Floor	Project	PANY/NJ-bt-200.200 WO 12
	Newark, NJ 07102		South Wing Emergency Stair Repairs
Attention	Darlene Coitino		
Phone No.	973-792-4691 Fax		

We are sending you herewith the following: ☐ Drawings ☒ Shop Drawings ☐ Samples ☐ Specifications ☒ Other:

Via: ☒ Attached ☐ Separate Cover Via Mail

Quantity	Drawing/Submittal No.	Description	Action
9	05121-001	Dwg: Title: Welding Quality Plan Desc: Welding Quality Control	3

Remarks:

cc: P. Salvatore; A. Kaprielian/PANYNJ

Signed Anthony Carnabuci for

By Anthony J. Carnabuci

Date 8/20/2010

625 Eighth Avenue
2nd Flr, North Building
New York, NY 10018

Phone
212-629-6187
Fax
212-629-9243

VRH Construction Corp.

625 Eighth Avenue
2nd Flr, North Building
New York, NY 10018

Phone: 212-629-6187
Fax: 212-629-9243

SUBMITTAL NO. 05121-001
PACKAGE NO: 05121

TITLE: Welding Quality Plan
PROJECT: PANY/NJ-bt-200.200 WO 12

DRAWING:
STATUS: 3
BIC: PANYNJ

REQUIRED START: 8/20/2010
REQUIRED FINISH: 9/3/2010

DAYS HELD: 0
DAYS ELAPSED: 0
DAYS OVERDUE: -14

RECEIVED FROM		SENT TO		RETURNED BY		FORWARDED TO	
PAPP	AP	PANYNJ	DC	PANYNJ	DC	PAPP	AP

Revision No.	Description / Remarks	Received	Sent	Returned	Forwarded	Status	Sepias	Prints	Drawing Date	Held	Elapsed
000	Welding Quality Control	8/20/2010	8/20/2010			3	0	9		0	0

Primavera ®

Papp Iron Works, Inc.

QUALITY CONTROL PLAN

WO#12-S. Wing Emergency Stair Repair

625 Eighth Ave. 2nd Floor

New York, NY 10018

950 South Second Street, PO Box 3149 Plainfield, NJ 07063 908-731-1000 Fax: 908-757-3567
Web Site: www.pappironworks.com

Package I

Winning Performance Since 1948

950 South Second Street, P.O. Box 3149, Plainfield, NJ. 07063
Tel: (908) 731-1000 Fax: (908) 757-3567
Web Site: www.pappironworks.com

Quality Control Plan

Amendment No: 1 February 1, 2003

This Quality Control Plan covers the processes and procedures established and implemented by our firm to ensure that the products supplied to our clients meet and exceed the highest standards within the miscellaneous structural steel industry and related sections of the AISC Code of Standard Practice for the Fabrication and Erection of Structural Steel Buildings and the AWS D1.1 Structural Welding Code.

This document is a confidential and propriety document and is intended for the use of our clients. It must not be duplicated and distributed without the written consent of an officer of Papp Iron Works, Inc. Each individual authorized copy is marked for identification and can be traced to this original.

An amendment is hereby made to the Papp Iron Works, Inc., QA/QC plan to conform with the testing, inspection and quality assurance requirements of the Port Authority of NY/NJ on all projects:

Management responsibilities:

Winning Performance since 1948

950 South Second Street, P.O. Box 3149, Plainfield, NJ. 07063
Tel: (908) 731-1000 Fax: (908) 757-3567
Web Site: www.pappironworks.com

Quality Control Plan

This Quality Control Plan covers the processes and procedures established and implemented by our firm to ensure that the products supplied to our clients meet and exceed the highest standards within the miscellaneous structural steel industry and related sections of the AISC Code of Standard Practice for the Fabrication and Erection of Structural Steel Buildings and the AWS D1.1 Structural Welding Code.

This document is a confidential and propriety document and is intended for the use of our clients. It must not be duplicated and distributed without the written consent of an officer of Papp Iron Works, Inc. Each individual authorized copy is marked for identification and can be traced to this original.

This section is amended to include the following statement(s):
Prior to the commencement of fabrication, there will be a meeting of the project manager, the president of Papp Iron Works (of designated deputy) and the QA/QC supervisor to discuss and address the specific QA/QC requirements of the project. Based on this firm's contractual obligations Papp will either engage a third party testing and inspection firm to conduct the required testing and inspection or request the owner or General Contractor to furnish such services.

Fabrication:
This section is amended to include the following statement(s):
The QA/QC supervisor will engage Analytical Quality & Monitoring Service, Inc. to conduct the required testing and inspection in accordance with the PA's requirements. Otherwise, the QA/QC manager will notify the owner, GC or designated representative when the fabrication is commencing so that adequate arrangements can be made by them to have the work inspected and tested.

Receiving Material Control:
This section is amended to include the following statement(s):
The QA/QC supervisor will hold copies of all mill test reports in a file and make them readily available to the third party inspection agency on request by such agency.

Surface Cleaning and Painting:
This section is amended to include the following statement(s):
The workers conducting the application of shop primer must review the surface cleaning requirements of the primer paint being used. The QA/QC supervisor shall verify that the required surface cleaning is done and that all conditions detrimental to the successful application and performance of the primer paint are absent such and inadequate surface and ambient temperature and excessive airborne particles.

Special Inspections:
This section is amended to include the following statement(s):
The QA/QC supervisor must verify that the following tests and inspection are conducted by the third party inspection agency hired by Papp or others:

100 % ultrasonic examinations of all groove welds.
100% visual of all joint fit-up and welds installed.
30% magnetic particle examination of all fillet welds.
Torque verification of all high strength bolts installed and tightened in the shop.
Inspection of primer paint for surface preparation and final dry film thickness.

Inspection of fieldwork:
This section is amended to include the following statement(s):
The field foreman must notify the project manager of field welding or bolting prior to the commencement of any such fieldwork.
The project manager shall notify AQM, Inc, the owner or GC of the pending commencement of welding work so that arrangements can be made for the responsible party to conduct the required inspections and testing or have them conducted.
The field foreman must have available for the use and review of the inspector, all welder certifications and procedure qualifications for the intended welding work prior to the commencement of any such work.
The field foreman must have the following equipment available for use by the third party inspection agency in the execution of his work:

Skidmore Wilhelm tension calibration gauge.
Calibrated torque wrench.
Safe access to the work being tested and inspected.

Table of Contents

Subject	Page No.
Quality Control Statement	2
Management Responsibilities	3
Drawings, RFIs and Approvals	4
Shop Fabrication	
Quality Control	4
Receiving Material Control	5
Raw Material Storage	5
Manufacture of Detail Parts	6
Joint Fit-Up	6
Burning and Flame Cutting	6
Punching and Drilling	7
Welding	8
Bolted Shop Connections	8
Tagging and Marking Completed pieces	9
Surface Cleaning, Painting & Coating	9
Storage of Fabricated Pieces	9
Final Shop Inspection: in-house or special	9
Shipment to the field	10
Receiving and Unloading in the field	11
Storage on site	11
Field Erection and Assembly	11
Field Welding	11
Field Bolting	12
Inspection of field work:	12
Field Corrections and Changes	12
Clean up and Demobilization	13
Conclusion	13

Quality Control Statement

The management and staff of Papp Iron Works, Inc. promise to strive to achieve the highest possible level of quality in our products and service. We are a full service miscellaneous structural steel fabricator and erector since 1948, who has achieved a very high ranking within our industry by constantly producing high quality products and service at very competitive prices and within the most demanding time frames.

We will continuously strive to build upon the level that we have achieved in an effort to further improve our reputation and stature within the industry and to assist our clients in achieving a competitive edge whenever they choose us for their projects.

This mission is a requirement for all of our staff to strive towards in our team effort to bring quality to our clients' projects through our own quality efforts. This document has been adopted as a standard by the management and staff of Papp Iron Works, Inc.

This document is not a safety awareness plan and does not address any safety issues related to the activities discussed herein. All personnel must be trained and aware of the safety requirements of their specific jobs and the hazards inherent as outlined in the company's safety plan and program.

Signed: _____ Date: 2-4-2010
Frank Stephan / Director of Operations President

Signed: _____ Date: 2-4-2010
Quality Control Manager

Management Responsibilities

It is the president of Papp Iron Works, Inc. responsibility to ensure that the quality control system is implemented and being adhered to. The president may delegate certain responsibilities to responsible personnel who will be familiar with the quality control program and will carry out such duties as is assigned by the president.

Such responsible personnel may include the following:

- Project manager
- Shop superintendent
- Field or shop foremen

The responsible personnel who will serve as the Quality Control supervisors must meet the minimum qualifications as follows:

- An employee of Papp Iron Works, Inc. for at least 5 consecutive years
- Be competent to detect deficiencies with fabrication layout, fit-up, welding and general fabrication.
- Must be able to read blue prints and interpret details and specifications used in steel fabrication.
- Must be familiar with the AWS D1.1 Structural Welding Code and the AISC Code of Standard Practice for the fabrication and erection of structural steel buildings.
- Have attended technical seminars and/ or courses in welding and steel fabrication.

Quality Control functions can also be carried out by workmen, who have been involved in layout, fit-up, fabrication and welding and has demonstrated such competence in their daily work assignments to the satisfaction of the QA supervisor.

The responsible personnel should communicate any break down in the quality control systems by written memo or at scheduled quality control meetings or at special meetings as may be necessary. Quality Control meetings should be scheduled at least once every two weeks. Special meetings should be called whenever a project's quality control requirements exceed those of Papp Iron Works or whenever a question is raised about the quality of our work.

The president, project manager, superintendent or foremen must familiarize themselves and inform the workmen of any special quality control requirements of a client or project which exceeds those of Papp Iron Works, Inc.

The shop superintendent shall provide safe access for any third party inspectors or owners' representatives who may visit the site. At no time should a non-employee such as
a third party inspector or other owners' representative be allowed to enter the shop floor unescorted because of safety reasons.

Drawings, RFI and Approvals

All detailing of shop drawings must be double checked for conformance with original bid documents and governing codes. Any changes must be accompanied by written approval by the engineer of record of the project or other party as designated by our client. Changes must be indicated on a revised drawing indicating the date, details and locations of the change.

The drafting and detailing department supervisor must ensure that drawings are up dated and submitted for approval by our client's engineers and architects. Drawings must be kept in a clean and orderly manner in the file drawers so that they can be easily located and that the latest revised copies are in place of superseded drawings at all times.

All Request For Information (RFI) or clarifications must be made in written format and filed in the project files as per industry standards. The project manager must be copied on all project correspondence and it is his responsibility to follow up with clients, engineers and architects for approval of our submittals and requests in a timely manner.

Fabrication

Quality Control

It is the shop superintendent's responsibility to ensure that all drawings issued for fabrication are approved. Any changes made after fabrication has started must be accompanied by a change order and documented on the shop drawing as per industry and AISC standards.

The quality control procedures are to be reviewed and followed by all shop employees as the first line of quality control of the products fabricated by our company. It is the shop superintendent's responsibility to ensure that all employees are familiar with them and that they are followed.

Field superintendence will be the responsibility of the project manager designated to a specific project. The project manager shall make sufficient field visits to ensure that the field operations are proceeding smoothly. Daily field supervision will be the responsibility of the field foreman.

Receiving Material Control

All structural steel materials should be checked upon delivery for general physical condition (exhibit 'E'). Any visible damage should be brought to the superintendent's attention or his designated representative during his absence.

All materials, other than A36, should be accompanied by mill test reports (exhibit 'D') and should be marked to clearly identify them from other materials. Job numbers should also be clearly marked on each piece. Mill test reports and material shipping documents must be held in each project's files.

Materials received into the shop must be stored in an acceptable manner so that they will not be damaged. Wood blocking must be used under items and they should be blocked in a manner that the weight from those above does not bend, twist or distort the ones below.

Structural steel members, hardware and equipment being shipped from this shop should be safely loaded, properly cribbed and secured onto the truck. Adequate blocking and tie-downs should be installed so that no damage or loss would occur. It is the driver's responsibility to verify that the load is properly balanced, blocked and secured onto the bed of the truck.
All accompanying documents, bills of laden and jobsite / vendor instructions should accompany each shipment in an envelope. All mill test reports, shipping tags and bills of laden should be clipped together and submitted to the shop superintendent for filing with other project documents.

Raw Material Storage

All work orders will be issued by the shop superintendent and delegated to the appropriate personnel. The workmen should familiarize themselves with the drawings that they are fabricating to and survey the materials to ensure that the have all the materials and the correct materials. Any damage, incorrect materials or shortages should be brought to the attention of the shop superintendent immediately. Only the superintendent has the authority to authorize the work to proceed under such conditions.

Detail work should be clearly marked and bundled by project. Plates, angles, etc. should be visually examined by the machine operator to ensure that all edges are cleanly sheared, cut, punched or drilled. Unacceptable edges will indicate either improper machine operation or defective machine parts. Any such situations should be brought to the immediate attention of the shop superintendent.

All layout work should be done from one end of the member. Working points should be center punched. Weld and hole sizes should be marked on the members. Columns and beams when ordered in double lengths should be clearly marked on each end to maintain traceability once cut.

Materials to be used for the fabrication of a member must be taken from stock ordered specifically for that project. Use of in-stock materials must be cleared with the shop superintendent first, who must ensure as a minimum, the following:

The piece is the correct size and shape
The material is the correct grade and type
The material is in good, first quality physical condition

Manufacture of Detail Pieces

Detail parts are the angles, clips, gussets, stiffeners, etc. that are attached to a structural member to make them work as designed and/or to connect to other members. These detail parts will be made within the designated shop area.

The shop foreman must review the following information prior to commencement of the fabrication of detail parts for a specific project:

Drawings are latest and approved
Materials are in stock and are the correct grade as per drawings

During and after the fabrication of detail pieces, the operator and later, shop foreman, must examine all pieces for acceptable sheared edges, acceptable punched holes and acceptable drilled holes. Flame cutting of detail pieces is only permitted when using a track guided torch assembly.

All detail pieces must be marked with the job number and relevant piece mark as per Papp's internal fabrication tracking procedures.

Joint Fit-up

Prior to welding, all joints must be examined by the welder for joint fit-up. The shop foreman must examine all joints to receive full penetration welds or other unusual welding procedures. All joint fit-ups must conform with the requirements of the AISC Code of Standard Practice for the Fabrication and Erection of Structural Steel Buildings and the American Welding Society.

Joints that are out of tolerance in accordance with the above referenced standards must be evaluated and either new detail pieces should be made or, in case of full penetration welds, qualified by testing to meet the requirements of the AWS D1.1 Structural Welding Code.

Burning and Flame cutting

Burning or Flame cutting is essential to the fabrication of structural steel members. However, it should be minimized and must be done by trained and experienced personnel when necessary. Burning is used to trim pieces, cope flanges, cut weld access holes and to cut sections.

Whenever burning or flame cutting is done, the roughness of the cut surface shall not be greater than that defined by the American National Standards Institute surface roughness of 1000 micro inches for material up to 4 inches thick and 2000 micro inches for materials 4 to 8 inches.

The surface shall be free of slag and occasional gouges less than 3/16 inch deep. Notches or gouges in the cut surface, that exceeds 3/16 inches, must be removed by grinding or machining with a slope towards the adjacent material surface. Gouges in excess of 3/16 inch can also be repaired by welding and grinding.

Beam copes must be cut with care to provide a smooth transition, free of notches and cuts past the point of tangency between the adjacent surface and shall meet the surface requirements stated above. Copes shall be free of sharp re-entrant corners in rolled members.

Weld access holes shall be made to the dimensions shown on the approved shop drawings and shall meet the notch free and surface roughness requirements as stated above. Weld access holes and beam copes shall be free of sharp re-entrant corners except that in fillet welded built up members, the cope or weld access hole shall terminate at 90° to the flange.

Punching and Drilling of Holes

Punching will be used to make bolt holes in detail pieces up to ½ inch. Drilling will be used to make bolt holes in beam and column webs and flanges and detail pieces greater than ½ inch thick. All bolt holes, whether punched or drilled shall meet the requirements of the AISC Code Specification for the Design, Fabrication and Erection of Structural Steel for Buildings.

Slotted holes shall be stated on the drawings as short or long slotted holes. Punched holes should be deburred to remove burrs that can impair proper bolting of the joints. Punches should be sharp and clean so as not to distort, rip or tear the base metal in or adjacent to the bolt hole. Detail pieces should be checked for straightness and flatness of surfaces to receive bolting. Any distorted, twisted or bent piece should be straightened prior to use or discarded as scrap.

Drilled holes will be made with magnetic base drills utilizing the correct size drill bits. Holes shall conform with the requirements of the AISC Code Specification for the Design, Fabrication and Erection of Structural Steel for Buildings. All standard holes shall be 1/8" larger than the nominal diameter of the bolt except for oversized holes where shown on drawings.

Welding

Welding must only be done by certified welders (exhibit 'C'). The shop welders are certified in different positions, processes, limits and materials. The foreman should ensure that welders are delegated to do welding for which they are certified and qualified. A list of shop welders and their limitations must be held in the superintendent's office. Welding must be done in accordance with applicable codes and Papp Iron Works written welding procedures (exhibits ' A' & 'B'). All groove welds must be visually examined after the root pass is installed and before the groove is filled in, by the foreman.

Welders must examine their welding equipment to ensure that they are in good working order. The shop foremen should visually examine the first few welds installed by each welder to ensure acceptability. Each welder will be assigned an identification stamp, which should be marked adjacent to their welds whenever the welds are groove welds, fracture critical welds or welds not listed as pre-qualified by the AWS D1.1 code.

The welder should visually examine each weld and check for weld size, undercut, porosity, or any other deficiency. Any deficiency should be reported to the shop superintendent who will investigate whether the equipment or materials are responsible for the deficiency. Any welder who consecutively produces four defective fillets or two defective groove welds may be subject to re-qualification, at the discretion of the shop superintendant.

Welding in cold weather may require preheating. All pre and post weld heat treatment should be done under the supervision of the shop superintendent and following written procedures. Whenever a project requires testing and inspection by an independent agency,
our client's representative should be notified at least one week prior to commencement of any work which may require such inspections.

Bolted Shop Connections

Bolted connections made in the shop shall be in accordance with the AISC Code for the use of ASTM A325 and A490 bolts. Connections that require field disassembly and re-assembly shall be bolted and left untightened. The correct size, bolt grade and same lot to be used in the field connections shall be installed in the shop connections.

Bolted connections that do not require any work in the field shall be bolted and tightened in their final positions in the shop. Tightening shall be done by calibrated wrench method or by using special electric wrenches for tension control bolts.

Torque values shall be determined for the bolts using a tension calibration device and checked with a calibrated torque wrench set on the same tension device using bolts from the same lot and batch.

Tagging and Marking completed pieces

All completed members shall be marked and tagged on the 'tagged end' as determined by field erection sequence drawings. Markings shall be clear and legible and shall contain the piece mark as shown on the fabrication detail drawing.

Members to receive shop primer shall be marked with a bleed thru crayon so that the marks are visible after painting. Members to receive sandblasting and special painting shall be tagged with a metallic hanging tag so that the markings remain with the member after painting. Members to receive galvanize coating shall be shipped with welded hanging tabs showing the piece number.

Surface Cleaning and Painting

Papp Iron Works, Inc, applies all "shop primer" applications in house. Other coatings, which require more extensive surface preparation and coating applications, will be shipped to an approved painting contractor, or galvanizing applicator for zinc coating. As a minimum, surfaces receiving shop primer should be manually cleaned to remove loose mill scale, soil or grease prior to painting.

The painting sub-contractor shall be experienced and qualified to perform the tasks required to provide a first quality paint job. The contractor shall have the minimum capabilities and standards:

- ✓ Adequate indoor facilities to lay-down materials received for painting.
- ✓ Adequate facilities and equipment to conduct activities such and equipment handling, sand blasting and spray painting of structural steel in accordance with the SSPC requirements.
- ✓ Adequate facilities to maintain and control humidity, temperature, wind and airborne dust particles so that blasting and painting activities can be accomplished in a manner acceptable to the paint manufacturer's specifications.
- ✓ The management and staff must have a training program and awareness program so that the operators and applicators are familiar with the requirements of the SSPC and various paint manufacturer's specifications. Such training program must include hands-on as well as classroom type instructions on the proper operation of the equipment they are using. Training must be documented and available for the owner or owner's representative to review if requested.
- ✓ Workmen must be able to readily determine whether the equipment and personnel are producing the required surface cleaning standards as defined by the SSPC, determine whether coatings are being applied in acceptable layer thicknesses and that the resultant surface texture is as desired.
- ✓ Adequate facilities to store finished materials in a manner that the surfaces would not be damaged.
- ✓ Adequate facilities to store raw materials. Materials should be inventoried and stocked in a FIFO basis to avoid the use of old and expired products. The facilities should also be capable of maintaining and monitoring temperatures within the acceptable storage range specified by the manufacturer.

No paint shall be applied within two inches of the faying surfaces of bolted connections and surfaces to receive field welding. Additionally, some projects have sections which

will receive spray on fireproofing insulation. Such members should be identified and marked for no paint on those projects that require standard shop primer.

All painting shall be done in an enclosed, designated area where the ambient temperature is at least 40°F. The floor shall be swept clean to prevent deleterious materials being blown onto the freshly painted surfaces.

Storage of Fabricated pieces

All fabricated members shall be stored in a designated staging area where they will not be mixed with other project materials. Blocking and cribbing shall be installed to prevent twisting, bending or distortion of the members from their own weight or the weight of pieces above. Painted members shall be padded in a manner to prevent damage to the paint coating.

Final Inspections

In-House Quality Control

Prior to shipment to the field, outside painter or zinc coating applicator, the shop foreman must visually examine all members to ensure that at a minimum the following conditions are met:

The members are completed and appropriately marked.
They have received shop primer if necessary
They have not been damaged during handling and storage
All of the pieces for that sequence was completed and are grouped together
All post fabrication shop changes are completed

Special Inspections

The project manager must be familiar with any special or additional inspections that are required on a specific project. Such special inspections may be the responsibility of Papp Iron Works, Inc. or the owner's agent. In all special inspections, an independent third party agency shall conduct these inspections and testing on behalf of Papp or the owner, depending on contractural obligations.

The shop superintendent must notify the project manager when special third party inspections are ready and such notification must be done in a timely manner so as to allow the third party to arrange to visit the shop and conduct the required inspections. The shop foreman must cooperate with any representative authorized to inspect the shop work and make necessary repairs as deemed needed by tests and inspections.

The shop superintendent is responsible for facilitating and cooperating with the independent inspector. Independent inspection agency representatives or other project representatives should be escorted to places where inspections are to be conducted. The shop superintendent should try to remove all pieces to be inspected from the work floor

Package II

Papp Iron Works, Inc

950 South Second Street, Plainfield, NJ. 07063
(908) 731-1000 Fax: (908) 757-3567

WELDING PROCEDURE SPECIFICATION

Company Name: Papp Iron Works, Inc. By: Freddie D. Shivdat
Welding Procedure Specification No: PIW-WPS-P4 Date: Jan. 5, '05 Supporting PQR No: NA
Revision No: 0 Date: Prequalified: Yes XX No
Welding Process(es): FCAW Type(s): Semi-Automatic

JOINTS **DETAILS**

Joint Design: TC-U4a -GF
Backing (Yes): X (No):
Backing Material (Type): 1" x ¼"

30° + 10° - 0

X Metal ☐ Nonfusing Metal
☐ Nonmetallic ☐ Other

Sketches, Production Drawings, Weld Symbols or Written Description should show the general arrangement of the parts to be welded. Where applicable, the root spacing and the details of the weld groove may be specified.

3/8" + 1/16"- 0"

T = 0.5 "

BASE METALS

P - No. Group No. to P - No. Group No.
OR
Specifications type and grade ASTM A572 Gr. 50
to Specification type and grade ASTM A572 Gr. 50
Thickness Range:
Base Metal: Groove 0.125" to 1.0" Fillet Any size, Any thickness
Welding Position: 1G Flat
Other Preheat - 50° min – 250 max Interpass – 400 max

FILLER METALS

Spec. No. (SFA) 5.20
AWS No. (Class) E7XT-X
F-No. 6
A-No. 1
Size of Filler Metals 0.068" Single electrode
Deposited Weld Metal 0.50" plus reinforcement – 1/8" max.
Thickness Range
Groove 1/8" to 0.50" ** Filler metal limitation
Fillet All
Electrode Flux (Class) N/A
Electrode Trade Name Lincoln –NR211-MP
Consumable Insert None
Other Wire stick out – ½" to 1"
Flow Rate: NA
Polarity: DCEN Amps: 120 -130 Volts: 13 - 17 Speed: Not Controlled

Approved for production by:
Papp Iron Works, Inc.

Papp Iron Works, Inc

950 South Second Street, Plainfield, NJ. 07063
(908) 731-1000 Fax: (908) 757-3567

WELDING PROCEDURE SPECIFICATION

Company Name: Papp Iron Works, Inc. By: Freddie D. Shivdat
Welding Procedure Specification No: PIW-WPS-P5 Date: Jan. 5, '05 Supporting PQR No: NA
Revision No: 0 Date: Prequalified: Yes XX No
Welding Process(es): FCAW Type(s): Semi-Automatic

JOINTS **DETAILS**

Joint Design: TC-U4a -GF
Backing (Yes): X (No):
Backing Material (Type): 1" x ¼"

30° + 10° - 0

X Metal ☐ Nonfusing Metal
☐ Nonmetallic ☐ Other

Sketches, Production Drawings, Weld Symbols or Written Description should show the general arrangement of the parts to be welded. Where applicable, the root spacing and the details of the weld groove may be specified.

3/8" + 1/16"- 0"

T = 1.0 "

BASE METALS

P - No. Group No. to P - No. Group No.

OR

Specifications type and grade ASTM A572 Gr. 50
to Specification type and grade ASTM A572 Gr. 50
Thickness Range:
Base Metal: Groove 0.125" to unlimited Fillet Any size, Any thickness
Welding Position: 1G Flat
Other Preheat - 50° min – 250 max Interpass – 400 max

FILLER METALS

Spec. No. (SFA) 5.20
AWS No. (Class) E7XT-X
F-No. 6
A-No. 1
Size of Filler Metals 3/32" Single electrode
Deposited Weld Metal 1.0" plus reinforcement – 1/8" max.
Thickness Range
Groove 1/8" to unlimited
Fillet All
Electrode Flux (Class) N/A
Electrode Trade Name Lincoln –NR-311
Consumable Insert None
Other Wire stick out – 1.5"
Flow Rate: NA
Polarity: DCEN Amps: 175 -225 Volts: 18-24 Speed: Not Controlled

Approved for production by:
Papp Iron Works, Inc.

Papp Iron Works, Inc

950 South Second Street, Plainfield, NJ. 07063
(908) 731-1000 Fax: (908) 757-3567

WELDING PROCEDURE SPECIFICATION

Company Name: Papp Iron Works, Inc. By: Freddie D. Shivdat
Welding Procedure Specification No: PIW-WPS-P6 Date: Jan. 13, '05 Supporting PQR No: NA
Revision No: 0 Date: Prequalified: Yes XX No
Welding Process(es): FCAW Type(s): Semi-Automatic

JOINTS

Joint Design: TC-U4a -GF
Backing (Yes): X (No):
Backing Material (Type): 1" x ¼"

X Metal ☐ Nonfusing Metal
☐ Nonmetallic ☐ Other

Sketches, Production Drawings, Weld Symbols or Written Description should show the general arrangement of the parts to be welded. Where applicable, the root spacing and the details of the weld groove may be specified.

DETAILS

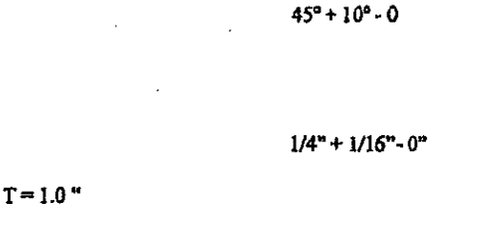

BASE METALS

P - No. Group No. to P - No. Group No.
OR
Specifications type and grade ASTM A572 Gr. 50
to Specification type and grade ASTM A572 Gr. 50
Thickness Range:
Base Metal: Groove 0.125" to unlimited Fillet Any size, Any thickness
Welding Position: All
Other Preheat - 50° min – 250 max Interpass – 400 max

FILLER METALS

Spec. No. (SFA) 5.20
AWS No. (Class) E71T-8J
F-No. 6
A-No. 1
Size of Filler Metals 0.068" Single electrode
Deposited Weld Metal 1.0" plus reinforcement – 1/8" max.
Thickness Range
Groove 1/8" to unlimited
Fillet All
Electrode Flux (Class) N/A
Electrode Trade Name Lincoln –NR-203MP
Consumable Insert None
Other Wire stick out – 0.75"
Flow Rate: NA
Polarity: DCEN Amps: 145 -265 Volts: 16-23 Wire Feed Speed: 70 – 150 in/m

Approved for production by:
Papp Iron Works, Inc.

Papp Iron Works, Inc

950 South Second Street, Plainfield, NJ. 07063
(908) 731-1000 Fax: (908) 757-3567

WELDING PROCEDURE SPECIFICATION

Company Name: Papp Iron Works, Inc. By: Freddie D. Shivdat
Welding Procedure Specification No: BU2a-P1a Date: Nov., 10, 1999 Supporting PQR No: NA
Revision No: 1 Date: 3/11/07 Prequalified: Yes XX No
Welding Process(es): SMAW Type(s): Manual

JOINTS **DETAILS**

Joint Design: B-U2a
Backing (Yes): X (No):
Backing Material (Type): 1" x ¼"

45° + 10° - 0

X Metal ☐ Nonfusing Metal
☐ Nonmetallic ☐ Other

Sketches, Production Drawings, Weld Symbols or Written Description should show the general arrangement of the parts to be welded. Where applicable, the root spacing and the details of the weld groove may be specified.

1/4" + 1/16" - 0"

T = 1.0"

BASE METALS

P - No. Group No. to P - No. Group No.
OR
Specifications type and grade ASTM A572 Gr. 50
to Specification type and grade ASTM A572 Gr. 50
Thickness Range:
Base Metal: Groove 0.125" to unlimited Fillet Any size, Any thickness
Welding Position: All
Other Preheat - 50° min – 250 max Interpass – 400 max

FILLER METALS

Spec. No. (SFA) AWS A5.1, ASME SFA-5.1
AWS No. (Class) E7018
F-No. 4
A-No. 1
Size of Filler Metals 1/8" Single electrode
Deposited Weld Metal Thickness Range 0.50" plus reinforcement – 1/8" max.
Groove Max. 1.0"
Fillet All
Electrode Flux (Class) N/A
Electrode Trade Name Lincoln Electric – Excalibur 7018
Consumable Insert None
Other NA
Flow Rate: NA
Polarity: DCEP Amps: 140-145 Volts: 19-22 Speed: Not controlled

Approved for production by
Papp Iron Works, Inc.

Papp Iron Works, Inc

950 South Second Street, Plainfield, NJ. 07063
(908) 731-1000 Fax: (908) 757-3567

WELDING PROCEDURE SPECIFICATION

Company Name: Papp Iron Works, Inc. By: Freddie D. Shivdat
Welding Procedure Specification No: BU2a-P3 Date: Nov., 10, 1999 Supporting PQR No: NA
Revision No: 1 Date: 6/21/04 Prequalified: Yes XX No
Welding Process(es): FCAW Type(s): Manual

JOINTS **DETAILS**

Joint Design: B-U2a -GF
Backing (Yes): X (No):
Backing Material (Type): 1" x ¼"

45° + 10° - 0

X Metal ☐ Nonfusing Metal
☐ Nonmetallic ☐ Other

Sketches, Production Drawings, Weld Symbols or Written Description should show the general arrangement of the parts to be welded. Where applicable, the root spacing and the details of the weld groove may be specified.

1/4" + 1/16"- 0"

T = 0.75 "

BASE METALS
P - No. Group No. to P - No. Group No.
OR
Specifications type and grade ASTM A572 Gr. 50
to Specification type and grade ASTM A572 Gr. 50
Thickness Range:
Base Metal: Groove 0.125" to 1.50" Fillet Any size, Any thickness
Welding Position: 1G Flat
Other Preheat - 50° min – 250 max Interpass – 400 max

FILLER METALS
Spec. No. (SFA) 5.20
AWS No. (Class) E7XT-X
F-No. 6
A-No. 1
Size of Filler Metals 0.045" Single electrode
Deposited Weld Metal 0.750" plus reinforcement – 1/8" max.
Thickness Range
Groove Max. 1.50"
Fillet All
Electrode Flux (Class) N/A
Electrode Trade Name Frontiarc – 711
Consumable Insert None
Other Shielding Gas - CO^2
Flow Rate: 35 to 40 cfm
Polarity: DCEN Amps: 200 - 250 Volts: 25 - 27 Speed: Not Controlled

Approved for production by:
Papp Iron Works, Inc.

Papp Iron Works, Inc

950 South Second Street, Plainfield, NJ. 07063
(908) 731-1000 Fax: (908) 757-3567

WELDING PROCEDURE SPECIFICATION

Company Name: Papp Iron Works, Inc. By: Freddie D. Shivdat
Welding Procedure Specification No: Papp-BU4a Date: April. 14, 2003 Supporting PQR No: NA
Revision No: 0 Date: Prequalified: Yes XX No
Welding Process(es): GMAW Type(s): Manual

JOINTS **DETAILS**

Joint Design: B-U4a
Backing (Yes): X (No):
Backing Material (Type): 1" x ¼"

45° + 10° - 0

☐ Metal ☐ Nonfusing Metal
☐ Nonmetallic ☐ Other

Sketches, Production Drawings, Weld Symbols or Written Description should show the general arrangement of the parts to be welded. Where applicable, the root spacing and the details of the weld groove may be specified.

1/4" + 1/16"- 0"

T = 0.375"

BASE METALS

P - No. Group No. to P - No. Group No.

OR

Specifications type and grade ASTM A572 Gr. 50
to Specification type and grade ASTM A572 Gr. 50
Thickness Range:
Base Metal: Groove 0.125" to 0.750" Fillet Any size, Any thickness
Welding Position: Vertical Up Hill
Other Preheat - 50° min – 250 max Interpass – 400 max

FILLER METALS

Spec. No. (SFA) 5.18 SMAW
AWS No. (Class) ER70S-X
F-No. 4
A-No. 1
Size of Filler Metals 0.035" Single electrode
Deposited Weld Metal 0.375" plus reinforcement – 1/8" max.
Thickness Range
Groove Max. 0.750"
Fillet All
Electrode Flux (Class) N/A
Electrode Trade Name American Welding Products, Inc.
Consumable Insert None
Other ** Shielding Gas CO^2/Ar – 50/50 mix
Flow Rate: 25 CFM
Polarity: DCEP Amps: 160-180 Volts: 24-25 Speed: 8 – 10 ipm.

Approved for production by:
Papp Iron Works, Inc.

Papp Iron Works, Inc

950 South Second Street, Plainfield, NJ. 07063
(908) 731-1000 Fax: (908) 757-3567

WELDING PROCEDURE SPECIFICATION

Company Name: Papp Iron Works, Inc. By: Freddie D. Shivdat
Welding Procedure Specification No: Papp-1G Date: April. 14, 2003 Supporting PQR No: NA
Revision No: 0 Date: Prequalified: Yes XX No
Welding Process(es): SMAW Type(s): Manual

JOINTS **DETAILS**

Joint Design: B-U2a
Backing (Yes): X (No):
Backing Material (Type): 1" x ¼"

45° + 10° - 0

☐ Metal ☐ Nonfusing Metal
☐ Nonmetallic ☐ Other.

Sketches, Production Drawings, Weld Symbols or Written Description should show the general arrangement of the parts to be welded. Where applicable, the root spacing and the details of the weld groove may be specified.

1/4" + 1/16"- 0"

T = 0.375 "

BASE METALS

P - No. Group No. to P - No. Group No.

OR

Specifications type and grade ASTM A572 Gr. 50
to Specification type and grade ASTM A572 Gr. 50
Thickness Range:
Base Metal: Groove 0.125" to 0.750" Fillet Any size, Any thickness
Welding Position: Flat
Other Preheat - 50° min – 250 max Interpass – 400 max

FILLER METALS

Spec. No. (SFA) 5.10 SMAW
AWS No. (Class) E7018
F-No. 4
A-No. 1
Size of Filler Metals 1/8", 3/32" & 5/32" Single electrode
Deposited Weld Metal 0.375" plus reinforcement – 1/8" max.
Thickness Range
Groove Max. 0.750"
Fillet All
Electrode Flux (Class) N/A
Flux Trade Name N/A
Consumable Insert None
Other NA
Flow Rate: NA
Polarity: DCEP Amps: 200-250 Volts: 24-27 Speed: 8 – 10 ipm.

Approved for production by:
Papp Iron Works, Inc.

Papp Iron Works, Inc

950 South Second Street, Plainfield, NJ. 07063
(908) 731-1000 Fax: (908) 757-3567

WELDING PROCEDURE SPECIFICATION

Company Name: Papp Iron Works, Inc. By: Freddie D. Shivdat
Welding Procedure Specification No: FCAW-P6 Date: Aug. 12, '04 Supporting PQR No: NA
Revision No: 0 Date: Prequalified: Yes XX No
Welding Process(es): FCAW Type(s): Semi-Automatic

JOINTS **DETAILS**

Joint Design: TC-U4a -GF
Backing (Yes): X (No):
Backing Material (Type): 1" x ¼"

45° + 10° - 0

X Metal ☐ Nonfusing Metal
☐ Nonmetallic ☐ Other

Sketches, Production Drawings, Weld Symbols or Written Description should show the general arrangement of the parts to be welded. Where applicable, the root spacing and the details of the weld groove may be specified.

1/4" + 1/16"- 0"

BASE METALS
P - No. Group No. II to P - No. Group No. II
OR
Specifications type and grade ASTM A106 Gr. B
to Specification type and grade ASTM A 36
Thickness Range:
Base Metal: Groove Unlimited Fillet Any size, Any thickness
Welding Position: All Positions Allowed
Other Preheat - 50° min – 250 max Interpass – 400 max

FILLER METALS
Spec. No. (SFA) 5.20
AWS No. (Class) E7XT-X
F-No. 6
A-No. 1
Size of Filler Metals 0.045" Single electrode
Deposited Weld Metal T + 1/8" max.
Thickness Range
Groove Unlimited
Fillet All
Electrode Flux (Class) N/A
Electrode Trade Name Frontiarc – 711
Consumable Insert None
Other Shielding Gas - CO^2
Flow Rate: 35 to 40 cfm
Polarity: DCEN Amps: 200 - 250 Volts: 25 - 27 Speed: 6 – 8 ipm

Approved for production by:
Papp Iron Works, Inc.

Index

Package I	*Quality Control Plan*
Package II	*Welding Procedure Specs* *Welder & Welding Oper. Qual. Test Record*
Package III	*Certifications*

Papp Iron Works, Inc.
950 South Second Street, Plainfield, NJ. 07063
Tel: (908) 731-1000 Fax: (908) 757-3567

WELDER and WELDING OPERATOR QUALIFICATION TEST RECORD

Welder or Welding Operator: Robert Aimone Identification No: _____
Welding process SMAW Manual XX Semiautomatic _____ Polarity _____
Position Overhead (4G)
(Flat, horizontal, overhead or vertical - if vertical, state whether upward or downhill)
In accordance with procedure specification no. B-U2a-P1a Revision No: 1
Material specification ASTM A 36 Carbon Steel Plate
Diameter and wall thickness (if pipe) otherwise, joint thickness 1" thick
Thickness range this qualifies: Groove 1/8" to unlimited Fillet All

Filler Metal

Specification no. AWS A5.1 Classification E7018 F no. 4
Describe filler metal if not covered by AWS Specification NA
Is backing Strip used ?: Yes
Filler metal diameter and trade name Lincoln Excalibur 1/8"
Flux for submerged arc or gas for gas metal of flux cored arc welding NA

Visual Inspection

Appearance Good Undercut None Piping Porosity None

Guided Bend Test Results

Type	Result	Type	Result
Side	Acceptable		
Side	Acceptable		

Test conducted by Freddie D. Shivdat Laboratory test no. RA – 4G 1 & 2
CWI # 91050351
Organization AQM, Inc. Test date March 11, 2007

We, the undersigned, certify that the statements in this record are correct and that the welds were prepared, welded and tested in accordance with the requirements sect. 4 of the ANSI / AWS D1.1 Code, (2006 (Year)) Structural Welding Code - Steel.

Contractor Papp Iron Works, Inc. Authorized By: _____
Date 2/14/12

950 South Second Street, Plainfield, NJ. 07063
Tel: (908) 731-1000 Fax: (908) 757-3567

WELDER and WELDING OPERATOR QUALIFICATION TEST RECORD

Welder or Welding Operator: William A. Bickhardt Identification No: _____
Welding process SMAW Manual XX Semiautomatic _____ Polarity _____
Position Vertical Uphill – (3F)
(Flat, horizontal, overhead or vertical - if vertical, state whether upward or downhill)
In accordance with procedure specification no. PIW-P9 Revision No: 0
Material specification ASTM A 572 Carbon Steel Plate
Diameter and wall thickness (if pipe) otherwise, joint thickness 3/8" thick
Thickness range this qualifies: Groove 1/8" to 3/8" Fillet Single pass

Filler Metal

Specification no. AWS A5.1 Classification E7018 F no. 4
Describe filler metal if not covered by AWS Specification NA
Is backing Strip used ?: NA
Filler metal diameter and trade name Lincoln Excalibur 1/8"
Flux for submerged arc or gas for gas metal of flux cored arc welding NA

Visual Inspection

Appearance Good Undercut None Piping Porosity None

Fillet Test Results

Appearance: Acceptable profile and leg distribution Fillet Size: 5/16"
Fracture Test Root Penetration: Acceptable – complete Macroetch: Accept – complete fusion

Test conducted by Freddie D. Shivdat Laboratory test no. WAB – 1 & 2
CWI # 91050351
Organization AQM, Inc. Test date March 11, 2007

We, the undersigned, certify that the statements in this record are correct and that the welds were prepared, welded and tested in accordance with the requirements sect. 4 of the ANSI / AWS D1.1 Code, (2006) Structural Welding Code - Steel.
(Year)

Contractor Papp Iron Works, Inc. Authorized By: _____
Date 2/7/10

Papp Iron Works, Inc

950 South Second Street, Plainfield, NJ. 07063
(908) 731-1000 Fax: (908) 757-3567

WELDER and WELDING OPERATOR QUALIFICATION TEST RECORD

Welder or welding operator's name G. Olekszyk Identification No: ____
Welding process FCAW Manual ____ Semiautomatic XX Machine ____
Position 1G, Flat
(Flat, horizontal, overhead or vertical - if vertical, state whether upward or downhill)
In accordance with procedure specification no. BU2a-P3
Material specification ASTM A36 Carbon Steel
Diameter and wall thickness (if pipe) otherwise, joint thickness 0.75" plate
Thickness range this qualifies 1/8" to 1.5" thick plate

Filler Metal

Specification no. AWS A5.20 Classification E7XT-X F no. 6
Describe filler metal if not covered by AWS specification NA
Is backing strip used ? Yes
Filler metal diameter and trade name Frontiarc 711 x 0.045" diameter
Flux for submerged arc or gas for gas metal of flux cored arc welding CO^2

Visual Inspection (9.25.1)

Appearance Good Undercut None Piping Porosity None

Guided Bend Test Results

Type	Result	Type	Result
Side	Acceptable		
Side	Acceptable		

Test conducted by AQM Corporation Laboratory test no. GO-1G-1 & 2
Per Freddie D. Shivdat Test date Nov., 15, 1999
(AWS CWI # 91050351)

We, the undersigned, certify that the statements in this record are correct and that the welds were prepared and tested in accordance with the requirements of the ANSI / AWS D1.1 Code, 1999 edition.

Manufacturer or Contractor Papp Iron Works, Inc
Authorized by Cezary Sosidko
Date 2/4/10

Papp Iron Works, Inc.

950 South Second Street, Plainfield, NJ. 07063
Tel: (908) 731-1000 Fax: (908) 757-3567

WELDER and WELDING OPERATOR QUALIFICATION TEST RECORD

Welder or Welding Operator: Wilson Encarnacion Identification No: ___
Welding process FCAW Manual ___ Semiautomatic XX Polarity ___
Position Vertical uphill (3G)
(Flat, horizontal, overhead or vertical - if vertical, state whether upward or downhill)
In accordance with procedure specification no. BU2a-P3 Revision No: 1
Material specification ASTM A 572 Carbon Steel Plate
Diameter and wall thickness (if pipe) otherwise, joint thickness 3/4" thick
Thickness range this qualifies: Groove 1/8" to 1 ½" Plate Fillet All

Filler Metal

Specification no. AWS A5.20 Classification E7XT-X F no. 6
Describe filler metal if not covered by AWS Specification Frontiarc - 711
Is backing Strip used ?: Yes
Filler metal diameter and trade name 0.045" Kobelco Frontiarc - 711
Flux for submerged arc or gas for gas metal or flux cored arc welding CO^2

Visual Inspection

Appearance Good Undercut None Piping Porosity None

Guided Bend Test Results

Type	Result	Type	Result
Side	Acceptable		
Side	Acceptable		

Test conducted by Freddie D. Shivdat Laboratory test no. WE- FCAW-3G: 1 & 2
CWI # 91050351
Organization AQM, Inc. Test date July 12, 2004

We, the undersigned, certify that the statements in this record are correct and that the welds were prepared, welded and tested in accordance with the requirements sect. 4 of the ANSI / AWS D1.1 Code, (2004 (Year)) Structural Welding Code - Steel.

Contractor Papp Iron Works, Inc. Authorized By: [signature]
Date 2/14/19

Papp Iron Works, Inc

950 South Second Street, Plainfield, NJ. 07063
(908) 731-1000 Fax: (908) 757-3567

WELDER and WELDING OPERATOR QUALIFICATION TEST RECORD

Welder or welding operator's name E. Appolon Identification No: _____
Welding process FCAW Manual _____ Semiautomatic XX Machine _____
Position 1G, Flat
(Flat, horizontal, overhead or vertical - if vertical, state whether upward or downhill)
In accordance with procedure specification no. BU2a-P3
Material specification ASTM A36 Carbon Steel
Diameter and wall thickness (if pipe) otherwise, joint thickness 0.75" plate
Thickness range this qualifies 1/8" to 1.5" thick plate

Filler Metal

Specification no. AWS A5.20 Classification E7XT-X F no. 6
Describe filler metal if not covered by AWS specification NA
Is backing strip used ? Yes
Filler metal diameter and trade name Frontiarc 711 x 0.045" diameter
Flux for submerged arc or gas for gas metal of flux cored arc welding CO^2

Visual Inspection (9.25.1)

Appearance Good Undercut None Piping Porosity None

Guided Bend Test Results

Type	Result	Type	Result
Side	Acceptable		
Side	Acceptable		

Test conducted by AQM Corporation Laboratory test no. EA-1G-1 & 2
Per Freddie D. Shivdat Test date Nov., 15, 1999
(AWS CWI # 91050351)

We, the undersigned, certify that the statements in this record are correct and that the welds were prepared and tested in accordance with the requirements of the ANSI / AWS D1.1 Code, 1999 edition.

Manufacturer or Contractor Papp Iron Works, Inc
Authorized by Cezary Sosidko
Date 2/4/10

Papp Iron Works, Inc

950 South Second Street, Plainfield, NJ. 07063
(908) 731-1000 Fax: (908) 757-3567

WELDER and WELDING OPERATOR QUALIFICATION TEST RECORD

Welder or welding operator's name E.Wojtala Identification No: _____
Welding process FCAW Manual _____ Semiautomatic XX Machine _____
Position 1G, Flat
(Flat, horizontal, overhead or vertical - if vertical, state whether upward or downhill)
In accordance with procedure specification no. BU2a-P3
Material specification ASTM A36 Carbon Steel
Diameter and wall thickness (if pipe) otherwise, joint thickness 0.75" plate
Thickness range this qualifies 1/8" to 1.5" thick plate

Filler Metal

Specification no. AWS A5.20 Classification E7XT-X F no. 6
Describe filler metal if not covered by AWS specification NA
Is backing strip used ? Yes
Filler metal diameter and trade name Frontiarc 711 x 0.045"diameter
Flux for submerged arc or gas for gas metal of flux cored arc welding CO^2

Visual Inspection (9.25.1)

Appearance Good Undercut None Piping Porosity None

Guided Bend Test Results

Type	Result	Type	Result
Side	Acceptable		
Side	Acceptable		

Test conducted by AQM Corporation Laboratory test no. EW-1G-1 & 2
Per Freddie D. Shivdat Test date Nov., 15, 1999
(AWS CWI # 91050351)

We, the undersigned, certify that the statements in this record are correct and that the welds were prepared and tested in accordance with the requirements of the ANSI / AWS D1.1 Code, 1999 edition.

Manufacturer or Contractor Papp Iron Works, Inc
Authorized by Cezary Sosidko
Date 2/4/10

Papp Iron Works, Inc

950 South Second Street, Plainfield, NJ. 07063
(908) 731-1000 Fax: (908) 757-3567

WELDER and WELDING OPERATOR QUALIFICATION TEST RECORD

Welder or welding operator's name Kazimierz Maczka Identification No: _____
Welding process GMAW Manual _____ Semiautomatic XX Machine _____
Position 3G, Overhead
(Flat, horizontal, overhead or vertical - if vertical, state whether upward or downhill)
In accordance with procedure specification no. BU2a-P2a
Material specification ASTM A36 Carbon Steel
Diameter and wall thickness (if pipe) otherwise, joint thickness 0.50" plate
Thickness range this qualifies 1/8" to 1.0" thick plate

Filler Metal

Specification no. AWS A5.18 Classification ER70S-X F no. 6
Describe filler metal if not covered by AWS specification NA
Is backing strip used ? Yes
Filler metal diameter and trade name Lincoln Electric Co. 0.035"
Flux for submerged arc or gas for gas metal of flux cored arc welding CO_2 / Ar 50/50

Visual Inspection (9.25.1)

Appearance Good Undercut None Piping Porosity None

Guided Bend Test Results

Type	Result	Type	Result
Side	Acceptable		
Side	Acceptable		

Test conducted by AQM Corporation Laboratory test no. KM-1G-1 & 2
Per Freddie D. Shivdat Test date Nov., 15, 1999
(AWS CWI # 91050351)

We, the undersigned, certify that the statements in this record are correct and that the welds were prepared and tested in accordance with the requirements of the ANSI / AWS D1.1 Code, 1999 edition.

Manufacturer or Contractor Papp Iron Works, Inc
Authorized by Cezary Sosidko
Date 2/4/10

Papp Iron Works, Inc

950 South Second Street, Plainfield, NJ. 07063
(908) 731-1000 Fax: (908) 757-3567

WELDER and WELDING OPERATOR QUALIFICATION TEST RECORD

Welder or welding operator's name D. Boatwright Identification No: ___
Welding process GMAW Manual ___ Semiautomatic XX Machine ___
Position 1G, Flat
(Flat, horizontal, overhead or vertical - if vertical, state whether upward or downhill)
In accordance with procedure specification no. BU2a-P2
Material specification ASTM A36 Carbon Steel
Diameter and wall thickness (if pipe) otherwise, joint thickness 0.50" plate
Thickness range this qualifies 1/8" to 1.0" thick plate

Filler Metal

Specification no. AWS A5.18 Classification ER70S-X F no. 6
Describe filler metal if not covered by AWS specification NA
Is backing strip used ? Yes
Filler metal diameter and trade name Lincoln Electric Co. 0.035"
Flux for submerged arc or gas for gas metal of flux cored arc welding CO_2 / Ar 50/50

Visual Inspection (9.25.1)

Appearance Good Undercut None Piping Porosity None

Guided Bend Test Results

Type	Result	Type	Result
Side	Acceptable		
Side	Acceptable		

Test conducted by AQM Corporation Laboratory test no. DB-1G-1 & 2
Per Freddie D. Shivdat Test date Nov., 15, 1999
(AWS CWI # 91050351)

We, the undersigned, certify that the statements in this record are correct and that the welds were prepared and tested in accordance with the requirements of the ANSI / AWS D1.1 Code, 1999 edition.

Manufacturer or Contractor Papp Iron Works, Inc
Authorized by Cezary Sosidko
Date 2/4/10

Papp Iron Works, Inc

950 South Second Street, Plainfield, NJ. 07063

(908) 731-1000 Fax: (908) 757-3567

WELDER and WELDING OPERATOR QUALIFICATION TEST RECORD

Welder or welding operator's name K. Kaczkowski Identification No: _____

Welding process GMAW Manual _____ Semiautomatic XX Machine _____

Position 1G, Flat

(Flat, horizontal, overhead or vertical - if vertical, state whether upward or downhill)

In accordance with procedure specification no. BU2a-P2

Material specification ASTM A36 Carbon Steel

Diameter and wall thickness (if pipe) otherwise, joint thickness 0.50" plate

Thickness range this qualifies 1/8" to 1.0" thick plate

Filler Metal

Specification no. AWS A5.18 Classification ER70S-X F no. 6

Describe filler metal if not covered by AWS specification NA

Is backing strip used ? Yes

Filler metal diameter and trade name Lincoln Electric Co. 0.035"

Flux for submerged arc or gas for gas metal of flux cored arc welding CO_2 / Ar 50/50

Visual Inspection (9.25.1)

Appearance Good Undercut None Piping Porosity None

Guided Bend Test Results

Type	Result	Type	Result
Side	Acceptable		
Side	Acceptable		

Test conducted by AQM Corporation Laboratory test no. KK-1G-1 & 2

Per Freddie D. Shivdat Test date Nov., 15, 1999

(AWS CWI # 91050351)

We, the undersigned, certify that the statements in this record are correct and that the welds were prepared and tested in accordance with the requirements of the ANSI / AWS D1.1 Code, 1999 edition.

Manufacturer or Contractor Papp Iron Works, Inc

Authorized by Cezary Sosidko

Date 2/4/10

Allegheny Ludlum

Jessop Specialty Products
500 Green Street
Washington, PA 15301

CERTIFIED MATERIAL TEST REPORT

YOUR ORDER NO.	T29560
MEMO NO.	153069-00
DATE	11/24/1998
SALESMAN NO.	582

EXHIBIT D

Ship ROLLED ALLOYS
To 125 W STERNS RD
TEMPERANCE MI 48182

ROLLED ALLOYS INC
125 W STERNS RD
P O BOX 319
TEMPERANCE MI 48182

TRACER # 85C0W

JESSOP UNS N08020 ALLOY HRAP
ASME SB-463-A97; ASTM B463-93; 20CB-3; UNS N08020;
DIN 50049 (2.1, 2.2, 2.3, 3.1.B);

Heat	Slip	Lot No		Size			Pcs	Weight	
782640	45236 A	55398	1.0000	x 72.0000	x 252.0000		1	5449	TA: 46364
782652	45235 B	55601	.2500	x 96.0000	x 248.0000		1	1871	TA: 46365
782652	45235 C	55601	.2500	x 96.0000	x 248.0000		1	1863	TA: 46366
782652	45235 A	55601	.2500	x 96.0000	x 250.0000		1	1886	TA: 46367

Heat	C	MN	P	S	SI	NI	CR	MO	CO	CU	CB	FE
782640	.018	.36	.018	.0005	.24	34.10	19.47	2.12	.104	3.16	.464	39.79
782652	.019	.44	.019	.0004	.24	33.94	19.49	2.11	.17	3.15	.455	39.99

Lot No	Gauge	Yield Strength	Tensile Strength	Elong	Red. of Area	Hardness	Bend	Corrosion	Grain Size
55398	1.0000	47.0 KSI	95.6 KSI	45.0	64.0	BHN156			
55601	.2500	50.5 KSI	93.4 KSI	43.0	70.0	BHN170			

CB = CB+TA
QUALITY ASSURANCE
MATERIAL WAS INSPECTED, TESTED AND IS CERTIFIED IN ACCORDANCE WITH DIN 50049-3.1 B
MATERIAL WAS NOT WELD REPAIRED
MATERIAL WAS PRODUCED WITHOUT KNOWN CONTACT WITH MERCURY

SAMPLE

Job No: _____
Project: _____

ROLLED ALLOYS QUALITY ASSURANCE
Approved _____
Date 11-30-98

EXCEPT AS OTHERWISE NOTED, THIS MATERIAL HAS BEEN MANUFACTURED AND TESTED IN ACCORDANCE WITH THE LISTED SPECIFICATIONS AND RESULTS CONFORM TO THE SPECIFICATION AND ORDER REQUIREMENTS.

EXHIBIT "E"

Papp Iron Works, Inc.
950 Second Street, Plainfield, NJ. 07063
tel: (908) 731-1000 fax: (908) 757-3567

Material Receiving Inspection Form

This form must be used to document the inspection of materials before they are released for fabrication

Project:_____ Date:_____

Customer:_____

Owner:_____

Vendor:_____

Description of materials (this shipment):_____

_____

Grade / Type:_____ Accept:_____ Reject:_____

Physical Condition: Excess Rust:_____ Visible damage:_____

Size:_____ Length:_____

Grade Marked:_____ Job / PO Marked:_____

Special Order Information: Rolled Shape:_____

Coating:_____

Prefabrication:_____

Remarks:_____

_____

Receiver:_____ QA Supervisor:_____

SAMPLE

Package III

AQM *Analytical Quality & Monitoring Service, Inc.*
Testing, Inspection, Consultation

CERTIFICATION STATEMENT

NAME: Freddie D. Shivdat	Date: June 23, 2007
EMPLOYEE NO.: N/A	SSN:

( ) NDT CERTIFICATION STATEMENT	(x) NDT RE-CERTIFICATION	( ) NDT TRANSFER STATEMENT

AUTHORITY: ANALYTICAL QUALITY MONITORING SERVICE, INC. QUALIFICATION AND CERTIFICATION OF NONDESTRUCTIVE TESTING PERSONNEL.

PROCEDURE AQM-0200-QC

Freddie D. Shivdat HAS COMPLIED WITH AND SUCCESSFULLY PASSED ALL OF THE APPLICABLE EXAMINATION REQUIREMENTS OF AQM-0200-QC, WHICH INCLUDES THE REQUIREMENTS OF SNT-TC-1A AND IS HEREBY CERTIFIED AS FOLLOWS:

METHOD	LEVEL	CERTIFICATION DATE	RE-CERTIFICATION DATE
Ultrasonic	II	June 23, 2007	June 23, 2010
Magnetic Particle	II	June 22, 2007	June 22, 2010
Liquid Penetrant	II	June 21, 2007	June 21, 2010

ALL PERSONNEL RECORDS ARE MAINTAINED BY ANALYTICAL QUALITY & MONITORING SERVICE, INC., AND ARE AVAILABLE FOR REVIEW UPON REQUEST.

Peter Branch — CERTIFIED BY
Level III — TITLE
June 24, 2007 — DATE

P.O. Box 330-WOB, West Orange, NJ. 07052 (973) 736-6721 Fax: (973) 736-2768
www.aqminc.net

American Welding Society

Certifies that Welding Inspector

Freddie D Shivdat

has complied with the requirements of Section 6.1 of the AWS Standard for Qualification and Certification of Welding Inspectors QC1-96

91050351
CERTIFICATE NUMBER

May 2003
VALID DATE

EMPLOYER: REFER TO WALLET CARD FOR VALIDITY AND EXPIRATION DATE

AMERICAN WELDING SOCIETY INCORPORATED 1932 NEW YORK

PRESIDENT AWS

CHAIRMAN QUALIFICATION COMMITTEE

CHAIRMAN CERTIFICATION COMMITTEE

©1984 American Welding Society

American Welding Society

Certifies that Welding Inspector

Paul W Preuss

has complied with the requirements of AWS QC1,
Standard for AWS Certification of Welding Inspectors

04060641
CERTIFICATE NUMBER

June 1 2010
EXPIRATION DATE

EMPLOYER: REFER TO WALLET CARD FOR
VALIDITY AND EXPIRATION DATE

Gerald Uttrachi
PRESIDENT AWS

Paul R Evans
CHAIR, QUALIFICATION COMMITTEE

Ron K. Wilson
CHAIR, CERTIFICATION COMMITTEE

AQM *Analytical Quality & Monitoring Service, Inc.*
Testing, Inspection, Consultation

CERTIFICATION STATEMENT

NAME: Paul Preuss		Date: June 30, 2007
EMPLOYEE NO.: N/A		SSN:
(*) NDT CERTIFICATION STATEMENT	( ) NDT RE-CERTIFICATION	( ) NDT TRANSFER STATEMENT

AUTHORITY: ANALYTICAL QUALITY MONITORING SERVICE, INC. QUALIFICATION AND CERTIFICATION OF NONDESTRUCTIVE TESTING PERSONNEL.

PROCEDURE AQM-0200-QC

Paul W. Preuss HAS COMPLIED WITH AND SUCCESSFULLY PASSED ALL OF THE APPLICABLE EXAMINATION REQUIREMENTS OF AQM-0200-QC, WHICH INCLUDES THE REQUIREMENTS OF SNT-TC-1A AND IS HEREBY CERTIFIED AS FOLLOWS:

METHOD	LEVEL	CERTIFICATION DATE	RE-CERTIFICATION DATE
Visual - Remote	II	June 30, 2007	June 30, 2010
Visual - Direct	II	June 30, 2007	June 30, 2010
Liquid Dye Penetrant	II	June 30, 2007	June 30, 2010
Ultrasonic	II	June 30, 2007	June 30, 2010

ALL PERSONNEL RECORDS ARE MAINTAINED BY ANALYTICAL QUALITY & MONITORING SERVICE, INC., AND ARE AVAILABLE FOR REVIEW UPON REQUEST.

Peter Branch — CERTIFIED BY
Level III — TITLE
June 30, 2004 — DATE

P.O. Box 330-WOB, West Orange, NJ. 07052 (973) 736-6721 Fax: (973) 736-2768
www.aqminc.net

American Welding Society

Certifies That
WELDING INSPECTOR

Freddie D Shivdat

Has complied with the requirements of Section 6.1 of the AWS Standard for Qualification and Certification of Welding Inspectors, QC1-96

with X, without _____ eye correction, _____ color blind

Damian J. Kotecki
AWS President

AWS Certification Chair

91050351
Certificate Number

May 2009
Recertify by

American Welding Society

Certifies That
WELDING INSPECTOR

Paul W Preuss

Has complied with the requirements of AWS QC1, Standard for AWS Certification of Welding Inspectors.

with X, without _____ eye correction, _____ color blind

Gerald Uttrachi
AWS President

AWS Certification Chair

04060641
Certificate Number

June 1 2010
Expiration Date

PANYNJ - Project Management

2 Gateway Center
Newark, NJ 07102
Phone: 973-792-4629

THE PORT AUTHORITY OF NY & NJ

TRANSMITTAL

No. 00067

PROJECT: WO12 South Wing Emerg. Stair Repairs

DATE: 7/22/2010

TO: VRH Construction Corp.
c/o Port Authority of NY & NJ
625 Eight Ave. 2nd Flr. North Bldg
New York, NY 10018

Contract No: PABT-200.200/WO12

File

ATTN: **Anthony Carnabuci**

WE ARE SENDING:	STATUS LEGEND:		SUBMITTED FOR:
☑ Shop Drawings	Approved (APP)	New Item (NEW)	☐ Approval
☐ Letter	Approved as Corrected (AAC)	Not Approved (NA)	☐ Your Use
☐ Prints	Approved as Noted (AAN)	Not Reviewed (NR)	☑ As Requested
☐ Change Order	For Record Only (FRO)	Review With Comments (RWC)	☐ Review and Comment
☐ Plans	For Your Information (FYI)	Review With No Comments (RWNC)	
☐ Samples	Incomplete (INC)	Superseded (SUPS)	
☐ Specifications	SENT VIA:		DUE DATE:
☑ Other: Made from Submittal	☑ Attached ☐ Separate Cover Via: Mail		

PACKAGE	SUBMITTAL	DWG. #	REV.	COPIES	DATE	DESCRIPTION	STATUS
02094	02094-0002		R001	2	7/22/2010	Desc: Lead Abatement Package	APP

PLEASE SUBMIT ALL OTHER FOLLOWING TRANSMITTALS AS PER THE PORT AUTHORITY'S GUIDELINES FOR SUBMITTING RFI's AND TRANSMITTALS. INCLUDE TRANSMITTAL #, SPEC #, SUBMITTAL #, TITLE, DESCRIPTION AND NUMBER OF ITEMS, IN THE APPROPRIATE SPACES PROVIDED.

( ) Please make necessary corrections as noted, if any. Place approval form on original of each approved drawing or cut, insert date of approval within same and return _____ prints each. IT IS REQUESTED THAT THESE PRINTS BE RETURNED TO US WITHIN 5 DAYS.

( ) CLEAR TRANSPARENCY REQUIRED
The Contract required that the Contractor shall furnish to the engineer one set of drawings, all clearly revised, completed and brought up-to-date showing all of the permanent equipment, materials and construction as actually used.

JUL 28 2010

Your earliest attention to these items would be greatly appreciated so as to avoid delay in the progress of the job.

CC: K. Chan w/trans.
File w/ att(1)
P. Salvatore w/att.

Very Truly Yours,

Signed: _____
Ka-Kei Chan

THE PORT AUTHORITY OF NY & NJ

(✓) APPROVED
( ) APPROVED AS CORRECTED
( ) NOT APPROVED

APPROVAL IS ONLY FOR CONFORMANCE WITH THE DESIGN CONCEPT OF THE PROJECT AND COMPLIANCE WITH THE INFORMATION GIVEN IN THE CONTRACT DOCUMENTS. CONTRACTOR IS RESPONSIBLE FOR CONFIRMING AND CORRELATING ALL DIMENSIONS AT THE JOB SITE FOR OPERATIONS THAT PERTAIN TO THE FABRICATION PROCESSES OR TO TECHNIQUES OF CONSTRUCTION AND FOR COORDINATION OF THE WORK OF ALL TRADES.

The Port Authority of NY & NJ
Engineering Department
Engineering Program Manager

Date: 7-21-10 By: _____
Senior Engineer/Architect

FINE PAINTING & DECO., CO., INC.

LEAD PAINT REMOVAL AND DISPOSAL

PORT AUTHORITY BUS TERMINAL
South Wing Emergency Stair Repair

BT 200.200 (WO # 12)

02094-002
200.200 W.O. 12

FINE PAINTING & DECO., CO., INC.

LEAD PAINT REMOVAL AND DISPOSAL

PORT AUTHORITY BUS TERMINAL
South Wing Emergency Stair Repair

BT 200.200 (WO # 12)

02094-002
200.200 W.O. 12

INDEX

1. SUBCONTRACTOR CHAIN OF COMMAND.
2. IDENTIFICATION HAZARDOUS WASTE LIAISON.
3. CONTRACT AND SITE PROCEDURES TO BE FOLLOWED BY CONTRACTORS.
4. WORKER PROTECTION PLAN.
5. EMERGENCY RESPONSE AND NOTIFICATION PLAN.
6. WASTE TRANSPORTER PERMITS
7. WASTE DISPOSAL FACILITY PERMITS
8. TESTING LABORATORY CERTIFICATION
9. MSDS
10. COMPENENT PERSON
11. LIST OF WORKERS
12. OSHA and DOH CERTIFICATIONS for TESTING LABS.

ITEM # 1

SUBCONTRACTOR: CHAIN OF COMMAND FOR FINE PAINTING

PROJECT EXECUTIVE:	ANDY SINGH	Office Tel:	908-301-1040
		Office Fax:	908-301-0080
		Cell:	908-482-9875
PROJECT MANAGER:	ANOOP RAJ	Office Tel:	908-301-1040
		Office Fax:	908-301-0080
		Cell:	908-296-0764
PROJECT SUPERINTENDENT:	GREG GUGA	Office Tel:	908-301-1040
		Office Fax:	908-301-0080
		Cell:	908-482-8811
COMPENENT PERSON:	N RAMOS	Office Tel:	908-301-1040
		Office Fax:	908-301-0080
		Cell:	908-296-3060

ITEM # 2

IDENTIFICATION
HAZARDOUS WASTE
LIAISON

BT 200.200 (WO# 12)

VRH CONSTRUCTION MANAGER: ART KNOWLTON Tel.212-629-6187

ITEM # 3

CONTRACT AND SITE PROCEDURES TO BE FOLLOWED BY CONTRACTORS

BT 200.200 (WO# 12)

LEAD PAINT REMOVAL PACKAGE
SITE SPECIFIC INFORMATION

CONTRACT # BT 200.200 (WO# 12)

1. Name and Location(s) where lead paint removal is to occur:
   Various locations at Bus Terminal Stairs A, B, C, D, E and R

2. Specific removal method to be performed @ each location:
   Chemical stripping

3. Number of men working for lead paint removal: 2 workers, 1 Supervisor.

NO LEAD PAINT REMOVAL WORK SHALL TAKE PLACE WITHOUT THE CURRENT LEAD PAINT REMOVAL WORK SCHEDULE.

IF THERE ARE ANY CHANGES TO THE LEAD PAINT REMOVAL WORK SCHEDULE, CONTRACTOR MUST SUBMIT A REVISED WORK SCHEDULE PRIOR TO COMMENCEMENT OF ANY WORK WITHIN THREE (3) WORKING DAYS (72 hrs.) TO CONSTRUCTION MANAGER'S OFFICE FOR FORWARDING TO ENVIRONMENTAL ENGINEERING.

***** AS WORK AREAS ARE NOT YET IDENTIFIED A DETAIL DRAWING WILL BE MADE AVAILABLE PRIOR TO THE START OF THE PROJECT WHEN THE INFORMATION IS AVAILABLE.**
ADDITIONALLY A NEGATIVE AIR SYSTEM IS NOT REQUIRED AS ALL LEAD PAINT REMOVAL IS DONE BY CHEMICAL STRIPPING IN WET CONDITIONS THEREBY ELIMINATING ANY RELEASE OF LEAD PARTICLES IN THE AIR.

Lead Paint Program

Removal of Lead Paint will be performed as follows:
Removal all paint by chemical stripping.
Lead Abatement methods and Procedure for disposal of Lead Contaminated materials are as follows:

A. Chemical Stripping method:

Paint will be stripped from existing painted steel surfaces as by contract, to facilitate installation of new steel. The Chemical to be used is Peel-Away 1 as manufactured by Dumond Chemical Company. The work area will be contained with SSPC class 3c containment by means of 6 Mils fire retardant and chemical resistant plastic sheeting. Peel-Away which is in a paste form will be applied to the steel surface manually. The paste so applied will then be covered using plastic sheeting taped on all sides using duct tape. The outer side of the plastic sheeting will have caution tape marked "CAUTION: LEAD PAINT" on it. The plastic sheeting controls evaporation. The dwell time for the process will depend on ambient temperature. In general, the dwell time ranges from 12 to 24 hours. The paste along with the existing paint is then removed by sliding a taping or putty knife under the paste and easing the paste, paint and cloth away from the surface in one piece and into drip pans with six mil polyethylene liners. Any remaining paste will be scraped off using a putty knife. The steel surface is then scrubbed with a stiff broom and rinsed with water. Wash water will be contained by means of wet vacuum. The cleaned steel surface will need to be neutralized. As per the manufacturer of Peel-Away -1 the product to be used is Peel-Away Neutralizer. The lead containing waste is then put into OSHA approved 55 Gal drum with warning label that it contains Hazardous Waste

B. Security:

The area of the work will be cordoned-off with warning tape and signs to prevent unlawful entry. Signs will clearly state: Warning, Lead Work Area, Poison, and No Smoking or Eating. All areas will be regulated and supervised in order to insure that no unauthorized personnel enter within the designated abatement areas..

C. Personnel Protection:

All personnel working with in the designated area shall be required to wear respiratory protection and disposable clothing (Tyvek Suits). All workers shall be trained and certified in the proper use of tools. When leaving the work area, workers shall observe the following:

At a minimum a hand/face wash station will be provided for the workers to wash up. This station will be located in close proximity to the work area. If personal air monitoring results show air levels of Lead that exceeds 50 micrograms per cubic meter of air as an eight-hour TWA (OSHA PEL), a shower facility will be provided.

Additional Protection Equipment for Chemical Stripping

1. Full Face Shield
2. Heavy Duty Rubber Gloves
3. Hard Hats

The vacuum bag and filters will be checked at least once a day.

D. Daily air samples will be taken and sent for analysis until results indicate levels below 50 micrograms per cubic meter in an 8 hour T.W.A.

E. Medical Surveillance:
All employees involved in the project shall receive an initial medical surveillance, which consists of biological monitoring in the form of blood sampling and analysis for lead and zinc protoporphyrin levels. All medical surveillance shall be performed by a licensed physician in accordance with OSHA 29 CFR 1926.62 (F) 3 (H) A.

F. Clean Up:
All clean up of Lead Chips/Dust will be done using a Hepa Vacuum, wet sweeping will only be used when Hepa Vacuuming is not feasible. Dry Sweeping is strictly Prohibited. All Hepa filters will be checked daily. Plastic suits and tarps will be Hepa Vacuum cleaned and placed in a 55 gallon drums, a separate drum for the suits and a separate drum for the containment material. Each drum of the suits and containment material will be Tested for Lead by TCLP.

G. Storage Procedures:
F1) Paint Chips, Vacuum Bags, HEPA Filters will be stored and disposed of in OSHA Approved 55 gallon Drums. The Drums will be labeled "Paint Chips/Debris BT 200.200 (WO# 13), generation date (date first material went into drum) and Hazardous Waste". Drums of Paint Chips will be assumed Hazardous Waste; therefore TCLP Testing is not required.
F2) Suits will be stored in OSHA Approved 55 gallon drums, the drums will be labeled: "Protective Suits, BT 200.200 (WO# 13), generation date and Hazardous Waste Lead" if shown to be Hazardous by TCLP testing.
F3) Containment material will be stored in OSHA Approved 55 gallon drums labeled: "Containment Material, BT 200.200 (WO# 13), generation date and Hazardous Waste Lead" if shown to be Hazardous by TCLP testing.
The drums shall be stored in a safe and secure location. The drums will be placed so that labels will be facing outward, so that it's easy to read the labels. No Hazardous Waste will be stored on site for longer than 90 days.

H. Waste Disposal:

Hazardous Waste will be transported by an approved Hazardous Waste Transporter to an approved Hazardous Waste Disposal Facility. Before disposal, contractor will submit TCLP Lead results for Environmental Engineering Approval. EPA ID # to be obtained by OTHERS.
Hazardous waste manifest to be signed by VRH or PANY/NJ's Hazardous Waste Liaison ONLY. Non Hazardous suits and containment material to be disposed of as municipal waste (based on TCLP results).

Laboratory submitted for approval:
Schneider Laboratories Inc.
2512 West Cary Street
Richmond, NY 23220

Transportation of hazardous waste drums. Drums will be picked up by a PANY/NJ approved Transporter. Submitted for approval:

Price Trucking Corp.
67 Beacon Street
Buffalo, NY 14220

Disposal Facility. The hazardous waste will be disposed of by an EPA approved Disposal Facility. Submitted for approval:

Clean Earth Inc.
334 South Warminster Road
Hatboro, PA 19040

Copies of permits of the Testing Laboratory, Waste Transporter and Disposal Facility are herewith enclosed.

The Manifest will be signed and maintained by a trained Hazardous Waste Liaison of the VRH or PANY/NJ Construction Manager's office.
Environmental Engineering Of PANY/NJ (the Generator) shall obtain a site specific Generator ID# for this project. This is required prior to making arrangements for waste pick up.
Transporter is not allowed under USDOT rules to handle hazardous waste drums that do not carry a Generator ID#.

ITEM # 4

WORKER PROTECTION HEALTH AND SAFETY PLAN

GUIDELINES FOR WORKER PROTECTION PLAN INTERIM LEAD REQUIREMENTS (29 CFR 1926.62)

OSHA has recently published new interim lead Rule that requires construction industry employers to take steps to prevent worker from being exposed to lead levels greater than 50 micrograms per cubic meter of air as an eight-hour time-weighed average (TWA).

Preliminary workers protections are required when workers are exposed to lead levels above 30 micrograms per cubic meter as an eight-hour TWA, such as medical monitoring. Once the exposure level exceeds 50 micrograms, employers would have to employ more extensive workers protection methods, such as supplying respirators. The old standard set the exposure limit at 200 micrograms per cubic meter of air as an eight-hour TWA.

The new standard set the same exposure limit that the OSHA uses to protect workers in general industry. Among those likely to be affected by this rule according to OSHA are:

- Highway and street construction contractors
- Bridge, tunnel and elevated highway contractors
- Plumbing contractors
- Electrical work contractors
- Plastering, drywall and insulation work contractors
- Carpentry work contractors
- Floor layers and other floor work contractors
- Structural Steel erection contractors
- Glass products manufacturers
- Electric utilities
- State and municipal governments

Worker Protection Plan

Fine Painting and Deco. Co., Inc. will comply with the following:

Fine Painting and Deco. Co., Inc. will determine by conducting OSHA Personal Air Sampling to see if any worker is exposed to lead levels above 30 micrograms per cubic meter of air as an eight-hour time-weighted average. Exposure levels greater then this level will trigger other required compliance activities such as period exposure monitoring, biological monitoring and initial and annual employee training.

As per OSHA, to the extent feasible Fine Painting and Deco. Co., Inc. will initiate engineering and work practice controls to reduce lead exposure to levels at or below the permitted exposure level (50 micrograms per cubic meter of air as an eight-hour TWA). The provision includes developing and implementing a compliance plan.

Fine Painting and Deco. Co., Inc. Inc. will provide workers with respiratory protection if they are not able to keep exposure levels below the permitted limit through engineering and work practice controls, or whenever a worker requests such protection. Fine Painting and Deco. Co., Inc. requires proper maintenance of respiratory protection devices. Workers will be fit tested for respirators.

Disposable protective clothing and equipment will be provided to the employee. Non-disposable items will be cleaned, laundered, replaced or repaired as needed "to maintain effectiveness".

This rule provides requirements for housekeeping, including vacuuming surfaces to prevent accumulation of lead dust, which Fine Painting and Deco. Co., Inc. will observe.

Fine Painting and Deco. Co., Inc. will provide hygiene facilities and ensure that workers comply with hygiene practices to reduce lead absorption that accumulates on a worker's body or clothes.

A medical surveillance program will be provided to employees exposed or who potentially will be exposed above the action level (30 micrograms per cubic meter) under the supervision of a licensed physician.

If a worker's periodic blood test (including a follow-up test) shows a blood level at or above
50 micrograms of lead per deciliter of blood, the employee will be removed from the job. Employees with medical conditions that place them at an increased health risk from lead exposure also will be removed from the job. Employers are given up to 18 months of medical removal protection benefits, including maintaining total earnings, seniority and other employees' rights.
Workers will be provided with information and training under OSHA's hazards communication standard.

Fine Painting and Deco. Co., Inc. will post warning signs in all work areas:

WARNING
LEAD WORK AREA
POISON
NO SMOKING OR EATING

Fine Painting and Deco. Co., Inc. will keep records on exposure monitoring and assessment, medical surveillance and temporary medical removals as per record keeping requirements, and implement new controls that are developed as required. During life of the project all items installed for public safety shall be regularly inspected and maintained in safe condition.

Fine Painting and Deco. Co., Inc. will enforce all requirements for public protection with subcontractors where their work creates safety hazards for the public.

Fine Painting and Deco. Co., Inc. will provide to all workers training in the hazards of lead, the OSHA lead standard, the safety procedures and requirements of the Worker Protection Plan and all environmental regulation including those for the proper handling and management of hazardous waste. Copies of the OSHA Lead Standard and Worker's protection Plan will be made available to all workers.

*** All medical clearance certificates, Fit test records, Blood lead test results and Lead Certifications to be forwarded before commencement of the project.

ITEM # 5

Emergency Response/Notification Plan

Various types of emergencies can occur during lead abatement work. The conditions encountered with this type of work such as plastic sheeting, water, ladders, scaffolding, and electricity creates a situation where accidents can be very probable. Another consideration is the lead dust hazard encountered in the work area. With proper planning accidents can be avoided. All ladders will be checked for defects. Water will not be allowed to accumulate. All electrical connections will be inspected daily and shall be ground fault protected.

A. Emergency Phone Numbers

Emergency phone numbers are a primary part of any emergency plan. The phone number of the local police, fire department and ambulance will be posted near the work area. In the event of an emergency, the superintendent shall be notified immediately and he will contact the emergency services. If for some reason he is unavailable, these numbers must be available to all personnel. Other numbers to be listed should include the project manager, contractor's office, and any other person responsible for the work being performed, such as VRH Telephone (212) 629-6187. VRH will be notified in case of any medical, fire or spill emergency.

The following list provides names and telephone numbers for emergency contact personnel. It will be posted in the lunchroom or where the nearest phones are located. In the event of a medical emergency, personnel will take directions from Health and Safety Officer (HSO) and notify the appropriate emergency organization. In the event of a fire or spill, the HSO will notify the appropriate local, state and federal agencies.

Organization	Contact	Telephone
Ambulance	Emergency	911
Police (PA POLICE – 212-502-2504)	Emergency	911
NYC Police Midtown South Precinct 357 West 35th St. New York, NY		(201) 239-9811
Fire	Emergency	911
Engine 9, 34th St. New York, NY	Central number	(718) 999-2000
St. Luke's – Roosevelt Hospital 1000 10th Ave. at 58th St. New York, NY	Emergency	(212) 523-4000
Poison Control Center		(800) 962-1253
National Response Center		(800) 424-8802
Center for Disease Control		(404) 488-4100
Chemtrex		(800) 424-9300
General Contractor's HSO	Art Knowlton	(212) 629-6187
PABT RESIDENT ENGINEER		(212)502-2274
Painting Contractor's Project Executive	Andy Singh	Cell: (908) 482-9875
Painting Contractor's Project Manager	Anoop Raj	Cell: (908) 296-0764
Painting Contractor's Superintendent	Greg Guga	Cell: (908) 482-8811
Painting Contractor- Fine Painting Co. Inc.		(908)301-1040
OSS must be notified in case of any Medical, Fire or Spill Emergency (M-F; 8 am – 5 pm)		(646) 252-5797
RTO Command Center (24 Hours a Day)	Emergency	(718) 243-4211
DEP		(718) 331-4357
OSHA		(212) 466-2481
NYDOT		(212) 676-0133

B. Emergency Medical Treatments Procedures

Any person who becomes ill or injured in the Exclusion zone must be decontaminated to the maximum extent possible. If the injury or illness is minor, full decontamination should be completed and first aid administered prior to transport.

If the patient's condition is serious, at least partial decontamination should be completed (i.e. Complete disrobing of the victims and redressing in clean overall or wrapping in a blanket). First Aid should be administered while awaiting an ambulance or paramedics. All injuries and illness must be immediately reported to the HSO and OSS.

Any person being taken to a clinic or hospital for treatment should take with them information on the chemical(s) they have been exposed to at the site.

C. Fire or Explosion

In the event of a fire or explosion, the local Fire Department should be summoned immediately. Upon their arrival, the Project Manager or designated alternate will advise the fire commander of the location, nature and identification of the hazardous materials on site. Portable fire extinguishers should only be used by personnel specifically trained to use such devices and used only to extinguish fires determined by the trained personnel to be small enough to be put out by the size and type of extinguisher available.

D. Spills or Leaks

In the event of a spill or leak, site personnel will:

- Inform their supervisors immediately.
- Locate the source of the spillage and stop the flow, if it can be done safely.
- Begin containment and recovery of the spilled materials, if it can be done safely.

If the spill or release is expected to pose significant hazards or is beyond the capabilities of the immediate personnel, the HSO will be contacted immediately. When contacted, the HSO will obtain and assess the following information:

- The material spilled or released.
- Location of the release or spill.
- An estimate of the quantity released and the rate at which it is being released.
- Any injuries involved.
- Fire and/or explosion or possibility of these events occurring.
- The areas and material involved in the location of the fire or explosion.

HSO WILL NOTIFY OFFICE OF SYSTEM SAFETY IMMEDIATELY

ITEM # 6

WASTE TRANSPORTER PERMITS

BT 200.200 (WO# 12)

NEW YORK STATE DEPARTMENT OF ENVIRONMENTAL CONSERVATION
DIVISION OF SOLID & HAZARDOUS MATERIALS

PART 364
WASTE TRANSPORTER PERMIT NO. 9A-025

Pursuant to Article 27, Titles 3 and 15 of the Environmental Conservation Law and 6 NYCRR 364

PERMIT ISSUED TO:

PRICE TRUCKING CORPORATION
67 BEACON STREET
BUFFALO, NY 14220

CONTACT NAME: JONATHON PRICE
COUNTY: ERIE
TELEPHONE NO: (716)822-1414

PERMIT TYPE:

☐ NEW
■ RENEWAL
☐ MODIFICATION

EFFECTIVE DATE: 04/01/2010
EXPIRATION DATE: 03/31/2011
US EPA ID NUMBER: NYD046765574

AUTHORIZED WASTE TYPES BY DESTINATION FACILITY:

The Permittee is Authorized to Transport the Following Waste Type(s) to the Destination Facility listed :

Destination Facility	Location	Waste Type(s)
110 Sand Company Clean Fill Disposal Site	Melville , NY	Non-Hazardous Industrial/Commercial
ADVANCED ENVIRONMENTAL RECYCLING CO, LLC.	ALLENTOWN , PA	Non-Hazardous Industrial/Commercial Hazardous Industrial/Commercial
ALLEGANY COUNTY LANDFILL	ANGELICA , NY	Petroleum Contaminated Soil
BFI NIAGARA FALLS LANDFILL FACILITY	NIAGARA FALLS , NY	Non-Hazardous Industrial/Commercial Asbestos Petroleum Contaminated Soil Sludge from Sewage or Water Supply Treatment Plant
CASIE ECOLOGY OIL SALVAGE INC	VINELAND , NJ	Non-Hazardous Industrial/Commercial Petroleum Contaminated Soil Hazardous Industrial/Commercial Waste Oil
CHAUTAUQUA COUNTY LANDFILL	JAMESTOWN , NY	Non-Hazardous Industrial/Commercial Asbestos Petroleum Contaminated Soil
Chemical Waste Management	Emelle , AL	Non-Hazardous Industrial/Commercial Asbestos Petroleum Contaminated Soil Hazardous Industrial/Commercial Waste Oil

*** AUTHORIZED WASTE TYPES BY DESTINATION FACILITY LISTING (continued on next page) ***

NOTE: By acceptance of this permit, the permittee agrees that the permit is contingent upon strict compliance with the Environmental Conservation Law, all applicable regulations, and the General Conditions printed on the back of this page.

ADDRESS: New York State Department of Environmental Conservation
Division of Solid & Hazardous Materials - Waste Transporter Program
625 Broadway, 9th Floor
Albany, NY 12233-7253

AUTHORIZED SIGNATURE: Glenn G. Wood Date: MAR 31 2010

NEW YORK STATE DEPARTMENT OF ENVIRONMENTAL CONSERVATION
DIVISION OF SOLID & HAZARDOUS MATERIALS

PART 364
WASTE TRANSPORTER PERMIT NO. 9A-025

Pursuant to Article 27,Titles 3 and 15 of the Environmental Conservation Law and 6 NYCRR 364

PERMIT ISSUED TO:

PRICE TRUCKING CORPORATION
67 BEACON STREET
BUFFALO, NY 14220

CONTACT NAME: JONATHON PRICE
COUNTY: ERIE
TELEPHONE NO: (716)822-1414

PERMIT TYPE:

☐ NEW
■ RENEWAL
☐ MODIFICATION

EFFECTIVE DATE: 04/01/2010
EXPIRATION DATE: **03/31/2011**
US EPA ID NUMBER: NYD046765574

AUTHORIZED WASTE TYPES BY DESTINATION FACILITY: (Continued)
The Permittee Is Authorized to Transport the Following Waste Type(s) to the Destination Facility listed :

Destination Facility	Location	Waste Type(s)
CID LANDFILL, INC.	CHAFFEE , NY	Non-Hazardous Industrial/Commercial Petroleum Contaminated Soil
CLEAN EARTH OF CARTERET	CARTERET , NJ	Non-Hazardous Industrial/Commercial Petroleum Contaminated Soil
CLEAN EARTH OF NORTH JERSEY	SOUTH KEARNY , NJ	Non-Hazardous Industrial/Commercial Asbestos Petroleum Contaminated Soil Hazardous Industrial/Commercial Waste Oil
CLEAN EARTH OF PHILADELPHIA	PHILADELPHIA , PA	Non-Hazardous Industrial/Commercial Petroleum Contaminated Soil
CLEAN HARBORS BUTTONWILLOW LLC	BUTTONWILLOW , CA	Non-Hazardous Industrial/Commercial Asbestos Petroleum Contaminated Soil Hazardous Industrial/Commercial Waste Oil
CLEAN HARBORS CANADA INC	LONDON , ON	Non-Hazardous Industrial/Commercial Petroleum Contaminated Soil Hazardous Industrial/Commercial Waste Oil
CLEAN HARBORS DEER PARK	LAPORTE , TX	Non-Hazardous Industrial/Commercial Asbestos Petroleum Contaminated Soil Grease Trap Waste Waste Oil Medical
CLEAN HARBORS ENVIRONMENTAL	ARAGONITE , UT	Non-Hazardous Industrial/Commercial Asbestos Petroleum Contaminated Soil Hazardous Industrial/Commercial Waste Oil
CLEAN HARBORS KIMBALL, NE	KIMBALL , NE	Non-Hazardous Industrial/Commercial

*** AUTHORIZED WASTE TYPES BY DESTINATION FACILITY LISTING (continued on next page) ***

NEW YORK STATE DEPARTMENT OF ENVIRONMENTAL CONSERVATION
DIVISION OF SOLID & HAZARDOUS MATERIALS

PART 364
WASTE TRANSPORTER PERMIT NO. 9A-025

Pursuant to Article 27, Titles 3 and 15 of the Environmental Conservation Law and 6 NYCRR 364

PERMIT ISSUED TO:

PRICE TRUCKING CORPORATION
67 BEACON STREET
BUFFALO, NY 14220

PERMIT TYPE:

☐ NEW
■ RENEWAL
☐ MODIFICATION

CONTACT NAME: JONATHON PRICE
COUNTY: ERIE
TELEPHONE NO: (716)822-1414

EFFECTIVE DATE: 04/01/2010
EXPIRATION DATE: **03/31/2011**
US EPA ID NUMBER: NYD046765574

AUTHORIZED WASTE TYPES BY DESTINATION FACILITY: (Continued)
The Permittee is Authorized to Transport the Following Waste Type(s) to the Destination Facility listed :

Destination Facility	Location	Waste Type(s)
CLEAN HARBORS KIMBALL, NE	KIMBALL , NE	Asbestos Petroleum Contaminated Soil Hazardous Industrial/Commercial Waste Oil
CLEAN HARBORS OF CANADA	CORUNNA , ON	Asbestos Petroleum Contaminated Soil Hazardous Industrial/Commercial
COVANTA ESSEX	NEWARK , NJ	Non-Hazardous Industrial/Commercial
COVANTA NIAGARA LP	NIAGARA FALLS , NY	Non-Hazardous Industrial/Commercial Petroleum Contaminated Soil Grease Trap Waste Waste Oil
CWM CHEMICAL SERVICES LLC	MODEL CITY , NY	Non-Hazardous Industrial/Commercial Asbestos Petroleum Contaminated Soil Sludge from Sewage or Water Supply Treatment Plant Hazardous Industrial/Commercial Waste Oil
ENVIRITE OF OHIO	CANTON , OH	Non-Hazardous Industrial/Commercial Hazardous Industrial/Commercial
ENVIRITE OF PENNSYLVANIA	YORK , PA	Non-Hazardous Industrial/Commercial Asbestos Petroleum Contaminated Soil Hazardous Industrial/Commercial
EQ AUGUSTA INC.	AUGUSTA , GA	Non-Hazardous Industrial/Commercial Waste Oil
EQ OF DETROIT	DETROIT , MI	Non-Hazardous Industrial/Commercial Asbestos Petroleum Contaminated Soil Grease Trap Waste Septage only (residential) Residential Raw Sewage including Portable Toilet Waste

*** AUTHORIZED WASTE TYPES BY DESTINATION FACILITY LISTING (continued on next page) ***

NEW YORK STATE DEPARTMENT OF ENVIRONMENTAL CONSERVATION
DIVISION OF SOLID & HAZARDOUS MATERIALS

PART 364
WASTE TRANSPORTER PERMIT NO. 9A-025

Pursuant to Article 27, Titles 3 and 15 of the Environmental Conservation Law and 6 NYCRR 364

PERMIT ISSUED TO:

PRICE TRUCKING CORPORATION
67 BEACON STREET
BUFFALO, NY 14220

CONTACT NAME: JONATHON PRICE
COUNTY: ERIE
TELEPHONE NO: (716)822-1414

PERMIT TYPE:

☐ NEW
■ RENEWAL
☐ MODIFICATION

EFFECTIVE DATE: 04/01/2010
EXPIRATION DATE: 03/31/2011
US EPA ID NUMBER: NYD046765574

AUTHORIZED WASTE TYPES BY DESTINATION FACILITY: (Continued)
The Permittee is Authorized to Transport the Following Waste Type(s) to the Destination Facility listed :

Destination Facility	Location	Waste Type(s)
EQ OF DETROIT	DETROIT , MI	Non-Residential Raw Sewage or Sewage-Contaminated Wastes Sludge from Sewage or Water Supply Treatment Plant Hazardous Industrial/Commercial Waste Oil
EQ RESOURCE RECOVERY INC	ROMULUS , MI	Non-Hazardous Industrial/Commercial Hazardous Industrial/Commercial Waste Oil
GREENWOOD STREET LANDFILL	WORCESTER , MA	Non-Hazardous Industrial/Commercial Petroleum Contaminated Soil
GROWS LANDFILL(WASTE MGT.)	MORRISVILLE , PA	Non-Hazardous Industrial/Commercial Waste Tires Asbestos
High Acres Western Expansion Landfill	Fairport , NY	Non-Hazardous Industrial/Commercial Asbestos Petroleum Contaminated Soil Sludge from Sewage or Water Supply Treatment Plant
HYLAND LANDFILL	ANGELICA , NY	Non-Hazardous Industrial/Commercial Petroleum Contaminated Soil Sludge from Sewage or Water Supply Treatment Plant
LAKEVIEW LANDFILL	ERIE , PA	Non-Hazardous Industrial/Commercial Waste Tires Asbestos Petroleum Contaminated Soil Grease Trap Waste Septage only (residential) Residential Raw Sewage including Portable Toilet Waste Non-Residential Raw Sewage or Sewage-Contaminated Wastes Sludge from Sewage or Water Supply Treatment Plant Waste Oil
LORCO PETROLEUM SERVICES	ELIZABETH , NJ	Waste Oil
MAX ENVIRO	YUKON , PA	Non-Hazardous Industrial/Commercial Hazardous Industrial/Commercial

*** AUTHORIZED WASTE TYPES BY DESTINATION FACILITY LISTING (continued on next page) ***

NEW YORK STATE DEPARTMENT OF ENVIRONMENTAL CONSERVATION
DIVISION OF SOLID & HAZARDOUS MATERIALS

PART 364
WASTE TRANSPORTER PERMIT NO. 9A-025

Pursuant to Article 27,Titles 3 and 15 of the Environmental Conservation Law and 6 NYCRR 364

PERMIT ISSUED TO:

PRICE TRUCKING CORPORATION
67 BEACON STREET
BUFFALO, NY 14220

CONTACT NAME: JONATHON PRICE
COUNTY: ERIE
TELEPHONE NO: (716)822-1414

PERMIT TYPE:

☐ NEW
■ RENEWAL
☐ MODIFICATION

EFFECTIVE DATE: 04/01/2010
EXPIRATION DATE: 03/31/2011
US EPA ID NUMBER: NYD046765574

AUTHORIZED WASTE TYPES BY DESTINATION FACILITY: (Continued)
The Permittee is Authorized to Transport the Following Waste Type(s) to the Destination Facility listed :

Destination Facility	Location	Waste Type(s)
MCKEAN LANDFILL	KANE , PA	Non-Hazardous Industrial/Commercial Waste Tires Petroleum Contaminated Soil Grease Trap Waste Septage only (residential) Residential Raw Sewage including Portable Toilet Waste Non-Residential Raw Sewage or Sewage-Contaminated Wastes Sludge from Sewage or Water Supply Treatment Plant Waste Oil
MICHIGAN DISPOSAL WTP	BELLEVILLE , MI	Non-Hazardous Industrial/Commercial Asbestos Petroleum Contaminated Soil Grease Trap Waste Hazardous Industrial/Commercial Waste Oil
MILL SEAT LANDFILL	BERGEN , NY	Non-Hazardous Industrial/Commercial Asbestos Petroleum Contaminated Soil
MINERVA ENTERPRISES INC	WAYNESBURG , OH	Asbestos
MODERN LANDFILL	YORK , PA	Non-Hazardous Industrial/Commercial Asbestos Petroleum Contaminated Soil Non-Residential Raw Sewage or Sewage-Contaminated Wastes Sludge from Sewage or Water Supply Treatment Plant
MODERN LANDFILL INC	LEWISTON , NY	Non-Hazardous Industrial/Commercial Waste Tires Asbestos Petroleum Contaminated Soil Sludge from Sewage or Water Supply Treatment Plant
NORTHEAST LAMP RECYCLING, INC	EAST WINDSOR , CT	Non-Hazardous Industrial/Commercial
ONTARIO COUNTY LANDFILL	STANLEY , NY	Non-Hazardous Industrial/Commercial Waste Tires

*** AUTHORIZED WASTE TYPES BY DESTINATION FACILITY LISTING (continued on next page) ***

NEW YORK STATE DEPARTMENT OF ENVIRONMENTAL CONSERVATION
DIVISION OF SOLID & HAZARDOUS MATERIALS

PART 364
WASTE TRANSPORTER PERMIT NO. 9A-025

Pursuant to Article 27,Titles 3 and 15 of the Environmental Conservation Law and 6 NYCRR 364

PERMIT ISSUED TO:

PRICE TRUCKING CORPORATION
67 BEACON STREET
BUFFALO, NY 14220

CONTACT NAME: JONATHON PRICE
COUNTY: ERIE
TELEPHONE NO: (716)822-1414

PERMIT TYPE:

☐ NEW
■ RENEWAL
☐ MODIFICATION

EFFECTIVE DATE: 04/01/2010
EXPIRATION DATE: 03/31/2011
US EPA ID NUMBER: NYD046765574

AUTHORIZED WASTE TYPES BY DESTINATION FACILITY: (Continued)
The Permittee is Authorized to Transport the Following Waste Type(s) to the Destination Facility listed :

Destination Facility	Location	Waste Type(s)
ONTARIO COUNTY LANDFILL	STANLEY , NY	Asbestos Petroleum Contaminated Soil Grease Trap Waste Septage only (residential) Residential Raw Sewage including Portable Toilet Waste Non-Residential Raw Sewage or Sewage-Contaminated Wastes Sludge from Sewage or Water Supply Treatment Plant Waste Oil
ONYX SPECIAL SERVICES, INC.	PHOENIX , AZ	Non-Hazardous Industrial/Commercial Hazardous Industrial/Commercial
REVERE SMELTING & REFINING CORPORATION	MIDDLETOWN , NY	Non-Hazardous Industrial/Commercial Hazardous Industrial/Commercial
ROSS INCINERATION SERVICES, INC.	GRAFTON , OH	Non-Hazardous Industrial/Commercial Petroleum Contaminated Soil Hazardous Industrial/Commercial Waste Oil
SABIN METAL CORPORATION	SCOTTSVILLE , NY	Non-Hazardous Industrial/Commercial
Seneca Meadows LF	Waterloo , NY	Non-Hazardous Industrial/Commercial Waste Tires Asbestos Petroleum Contaminated Soil Sludge from Sewage or Water Supply Treatment Plant
SRI	LOWELLVILLE , OH	Non-Hazardous Industrial/Commercial Petroleum Contaminated Soil
TONAWANDA (T) LANDFILL	TONAWANDA , NY	Non-Hazardous Industrial/Commercial Petroleum Contaminated Soil
TULLYTOWN LANDFILL (WASTE MANAGEMENT)	TULLYTOWN BURROUGH , PA	Non-Hazardous Industrial/Commercial Asbestos Petroleum Contaminated Soil
VEOLIA ENVIRONMENTAL SERVICE LLC	SAUGET , IL	Petroleum Contaminated Soil Hazardous Industrial/Commercial Waste Oil

*** AUTHORIZED WASTE TYPES BY DESTINATION FACILITY LISTING (continued on next page) ***

NEW YORK STATE DEPARTMENT OF ENVIRONMENTAL CONSERVATION
DIVISION OF SOLID & HAZARDOUS MATERIALS

PART 364
WASTE TRANSPORTER PERMIT NO. 9A-025

Pursuant to Article 27, Titles 3 and 15 of the Environmental Conservation Law and 6 NYCRR 364

PERMIT ISSUED TO:

PRICE TRUCKING CORPORATION
67 BEACON STREET
BUFFALO, NY 14220

CONTACT NAME: JONATHON PRICE
COUNTY: ERIE
TELEPHONE NO: (716)822-1414

PERMIT TYPE:

☐ NEW
■ RENEWAL
☐ MODIFICATION

EFFECTIVE DATE: 04/01/2010
EXPIRATION DATE: 03/31/2011
US EPA ID NUMBER: NYD046765574

AUTHORIZED WASTE TYPES BY DESTINATION FACILITY: (Continued)
The Permittee is Authorized to Transport the Following Waste Type(s) to the Destination Facility listed :

Destination Facility	Location	Waste Type(s)
VEOLIA ENVIRONMENTAL SERVICE LLC	PORT ARTHUR , TX	Non-Hazardous Industrial/Commercial Petroleum Contaminated Soil Hazardous Industrial/Commercial Waste Oil
WASTE CONTROL SPECIALISTS	ANDREWS , TX	Non-Hazardous Industrial/Commercial Asbestos Petroleum Contaminated Soil Hazardous Industrial/Commercial
WASTE MANAGEMENT AMERICAN	WAYNEBURG , OH	Non-Hazardous Industrial/Commercial Waste Tires Asbestos Petroleum Contaminated Soil Sludge from Sewage or Water Supply Treatment Plant
WAYNE DISPOSAL, INC	BELLEVILLE , MI	Non-Hazardous Industrial/Commercial Asbestos Petroleum Contaminated Soil Hazardous Industrial/Commercial

NEW YORK STATE DEPARTMENT OF ENVIRONMENTAL CONSERVATION
DIVISION OF SOLID & HAZARDOUS MATERIALS

PART 364
WASTE TRANSPORTER PERMIT NO. 9A-025

Pursuant to Article 27,Titles 3 and 15 of the Environmental Conservation Law and 6 NYCRR 364

PERMIT ISSUED TO:

PRICE TRUCKING CORPORATION
67 BEACON STREET
BUFFALO, NY 14220

PERMIT TYPE:

☐ NEW
■ RENEWAL
☐ MODIFICATION

CONTACT NAME: JONATHON PRICE
COUNTY: ERIE
TELEPHONE NO: (716)822-1414

EFFECTIVE DATE: 04/01/2010
EXPIRATION DATE: 03/31/2011
US EPA ID NUMBER: NYD046765574

AUTHORIZED VEHICLES:

The Permittee is Authorized to Operate the Following Vehicles to Transport Waste:

(Vehicles enclosed in <>'s are authorized to haul Residential Raw Sewage and/or Septage only)

54 (Fifty Four) Permitted Vehicle(s)

MA SM39539
MA SM72111
MA SM87957
ME 0853267
ME 0853270
ME 0943701
ME 1069082
ME 1186596
ME 1334823
ME 1338824
ME 1338826
ME 1338827
ME 1338829
ME 1352149
ME 1458069
ME 1458070
NJ AF620Z
NJ AH755H
NJ AK330A
NY 2357B0
NY 2358B0
NY 2359B0
NY 2360B0
NY 2362B0
NY 2600B1
NY 2601B1
NY 2602B2
NY 2603B2
NY 2604B2
NY 2605B1
NY 2800B3
NY 2800B4
NY 2801B3
NY 2801B4
NY 2802B3
NY 2802B4
NY 2803B4
NY 2804B3
NY 2804B4
NY 2805B3
NY 2806B3
NY 2807B3
NY 2809B3
NY 2810B3
NY 2858B3
NY 2977B4
NY 2978B4
NY 2979B4
NY 2984B4
NY 41609PA
NY 41612PA
NY 58883JY
NY AD16492
NY AT87509
End of List

ITEM # 7

TREATMENT
AND WASTE DISPOSAL FACILITY
PERMITS

BT 200.200 (WO# 12)

ACORD CERTIFICATE OF LIABILITY INSURANCE

OP ID JS CLEAN-1 | DATE (MM/DD/YYYY) 07/09/09

PRODUCER

The Addis Group, Inc.
2500 Renaissance Blvd. Ste 100
King of Prussia PA 19406-2772
Phone: 610-279-8550 Fax: 610-279-8543

THIS CERTIFICATE IS ISSUED AS A MATTER OF INFORMATION ONLY AND CONFERS NO RIGHTS UPON THE CERTIFICATE HOLDER. THIS CERTIFICATE DOES NOT AMEND, EXTEND OR ALTER THE COVERAGE AFFORDED BY THE POLICIES BELOW.

INSURED

Clean Earth, Inc.
334 South Warminster Road
Hatboro PA 19040

INSURERS AFFORDING COVERAGE		NAIC #
INSURER A:	Zurich American Insurance Co.	16535
INSURER B:	Steadfast Insurance Co.	26387
INSURER C:		
INSURER D:		
INSURER E:		

COVERAGES

THE POLICIES OF INSURANCE LISTED BELOW HAVE BEEN ISSUED TO THE INSURED NAMED ABOVE FOR THE POLICY PERIOD INDICATED. NOTWITHSTANDING ANY REQUIREMENT, TERM OR CONDITION OF ANY CONTRACT OR OTHER DOCUMENT WITH RESPECT TO WHICH THIS CERTIFICATE MAY BE ISSUED OR MAY PERTAIN, THE INSURANCE AFFORDED BY THE POLICIES DESCRIBED HEREIN IS SUBJECT TO ALL THE TERMS, EXCLUSIONS AND CONDITIONS OF SUCH POLICIES. AGGREGATE LIMITS SHOWN MAY HAVE BEEN REDUCED BY PAID CLAIMS.

INSR LTR	ADD'L INSRD	TYPE OF INSURANCE	POLICY NUMBER	POLICY EFFECTIVE DATE (MM/DD/YY)	POLICY EXPIRATION DATE (MM/DD/YY)	LIMITS	
A		GENERAL LIABILITY [X] COMMERCIAL GENERAL LIABILITY [ ] CLAIMS MADE [X] OCCUR GEN'L AGGREGATE LIMIT APPLIES PER: [ ] POLICY [ ] PRO-JECT [ ] LOC	GLO9052698-03	06/30/09	06/30/10	EACH OCCURRENCE DAMAGE TO RENTED PREMISES (Ea occurence) MED EXP (Any one person) PERSONAL & ADV INJURY GENERAL AGGREGATE PRODUCTS - COMP/OP AGG	$ 1,000,000 $ 500,000 $ 10,000 $ 1,000,000 $ 2,000,000 $ 2,000,000
A		AUTOMOBILE LIABILITY [X] ANY AUTO [ ] ALL OWNED AUTOS [ ] SCHEDULED AUTOS [X] HIRED AUTOS [X] NON-OWNED AUTOS [X] Comp $1,000 [X] Collision $1,000	BAP9052700-03	06/30/09	06/30/10	COMBINED SINGLE LIMIT (Ea accident) BODILY INJURY (Per person) BODILY INJURY (Per accident) PROPERTY DAMAGE (Per accident)	$ 1,000,000 $ $ $
		GARAGE LIABILITY [ ] ANY AUTO				AUTO ONLY - EA ACCIDENT OTHER THAN AUTO ONLY: EA ACC AGG	$ $ $
B		EXCESS/UMBRELLA LIABILITY [X] OCCUR [ ] CLAIMS MADE [ ] DEDUCTIBLE [X] RETENTION $10,000	SEO9052703-03	06/30/09	06/30/10	EACH OCCURRENCE AGGREGATE	$ 20,000,000 $ 20,000,000 $ $ $
A		WORKERS COMPENSATION AND EMPLOYERS' LIABILITY ANY PROPRIETOR/PARTNER/EXECUTIVE OFFICER/MEMBER EXCLUDED? If yes, describe under SPECIAL PROVISIONS below	WC9052692-03	06/30/09	06/30/10	[X] WC STATU-TORY LIMITS [ ] OTH-ER E.L. EACH ACCIDENT E.L. DISEASE - EA EMPLOYEE E.L. DISEASE - POLICY LIMIT	 $ 1,000,000 $ 1,000,000 $ 1,000,000
B		OTHER Pollution Liability	PLC9052705-01	06/30/09	06/30/11	Per Claim Deduct.	$10,000,000 $100,000

DESCRIPTION OF OPERATIONS / LOCATIONS / VEHICLES / EXCLUSIONS ADDED BY ENDORSEMENT / SPECIAL PROVISIONS

Where required by a written contract or agreement with Clean Earth, Industrial Waste Technologies, Inc. is included as Additional Insured for General Liability.

CERTIFICATE HOLDER

INDUSWA

Industrial Waste Technologies, Inc.
22 Hillary Street
W Paterson NJ 07424

CANCELLATION

SHOULD ANY OF THE ABOVE DESCRIBED POLICIES BE CANCELLED BEFORE THE EXPIRATION DATE THEREOF, THE ISSUING INSURER WILL ENDEAVOR TO MAIL 30 DAYS WRITTEN NOTICE TO THE CERTIFICATE HOLDER NAMED TO THE LEFT, BUT FAILURE TO DO SO SHALL IMPOSE NO OBLIGATION OR LIABILITY OF ANY KIND UPON THE INSURER, ITS AGENTS OR REPRESENTATIVES.

AUTHORIZED REPRESENTATIVE

ACORD 25 (2001/08)

© ACORD CORPORATION 1988

NAMED INSUREDS:
Allied Environmental Group, Inc., 2163 Merrick Ave., Merrick, NY 11566
Clean Earth of Carteret, Inc., 24 Middlesex Ave., Carteret, NJ 07008
Clean Earth Dredging Technologies, Inc., 334 South Warminster Rd, Hatboro, PA 19040
Clean Earth of Maryland, Inc., 1469 Oak Ridge Place, Hagerstown, MD 21740
Clean Earth of New Castle, Inc., 94 Pyles Lane, New Castle, DE 19720
Clean Earth of North Jersey, Inc., 115 Jacobus Ave., South Kearny, NJ 07032
Clean Earth of Philadelphia, Inc., 3201 61st St., Philadelphia, PA 19153
Clean Earth of Southeast Pennsylvania, Inc., 7 Steel Road East, Morrisville, PA 19067

Client#: 13734 ENVITRA

ACORD™ CERTIFICATE OF LIABILITY INSURANCE

DATE (MM/DD/YYYY) 4/14/2010

PRODUCER
Infoch Partners, Inc., NJ
Suite 310
300 Executive Dr.
West Orange, NJ 07052

THIS CERTIFICATE IS ISSUED AS A MATTER OF INFORMATION ONLY AND CONFERS NO RIGHTS UPON THE CERTIFICATE HOLDER. THIS CERTIFICATE DOES NOT AMEND, EXTEND OR ALTER THE COVERAGE AFFORDED BY THE POLICIES BELOW.

INSURED
Environmental Transport Group, Inc.
PO Box 296
Flanders, NJ 07836

INSURERS AFFORDING COVERAGE	NAIC #
INSURER A: Zurich American Insurance Compa	16535
INSURER B: Steadfast Insurance Company	26387
INSURER C: Great American Insurance Compan	16691
INSURER D:	
INSURER E:	

COVERAGES

THE POLICIES OF INSURANCE LISTED BELOW HAVE BEEN ISSUED TO THE INSURED NAMED ABOVE FOR THE POLICY PERIOD INDICATED. NOTWITHSTANDING ANY REQUIREMENT, TERM OR CONDITION OF ANY CONTRACT OR OTHER DOCUMENT WITH RESPECT TO WHICH THIS CERTIFICATE MAY BE ISSUED OR MAY PERTAIN, THE INSURANCE AFFORDED BY THE POLICIES DESCRIBED HEREIN IS SUBJECT TO ALL THE TERMS, EXCLUSIONS AND CONDITIONS OF SUCH POLICIES. AGGREGATE LIMITS SHOWN MAY HAVE BEEN REDUCED BY PAID CLAIMS.

INSR LTR	ADD'L INSRD	TYPE OF INSURANCE	POLICY NUMBER	POLICY EFFECTIVE DATE (MM/DD/YY)	POLICY EXPIRATION DATE (MM/DD/YY)	LIMITS	
A		GENERAL LIABILITY X COMMERCIAL GENERAL LIABILITY CLAIMS MADE X OCCUR GEN'L AGGREGATE LIMIT APPLIES PER: POLICY PRO-JECT LOC	GLO398333508	04/15/10	04/15/11	EACH OCCURRENCE DAMAGE TO RENTED PREMISES (Ea occurrence) MED EXP (Any one person) PERSONAL & ADV INJURY GENERAL AGGREGATE PRODUCTS - COMP/OP AGG	$1,000,000 $100,000 $5,000 $1,000,000 $2,000,000 $2,000,000
A		AUTOMOBILE LIABILITY X ANY AUTO ALL OWNED AUTOS SCHEDULED AUTOS HIRED AUTOS NON-OWNED AUTOS X MCS90 X Trailer Inter	TRK398333908 $25,000	04/15/10	04/15/11	COMBINED SINGLE LIMIT (Ea accident) BODILY INJURY (Per person) BODILY INJURY (Per accident) PROPERTY DAMAGE (Per accident)	$1,000,000 $ $ $
		GARAGE LIABILITY ANY AUTO				AUTO ONLY - EA ACCIDENT OTHER THAN AUTO ONLY: EA ACC AGG	$ $ $
B		EXCESS/UMBRELLA LIABILITY X OCCUR CLAIMS MADE DEDUCTIBLE X RETENTION $ 10000	SEO398333608	04/15/10	04/15/11	EACH OCCURRENCE AGGREGATE	$4,000,000 $4,000,000 $ $ $
		WORKERS COMPENSATION AND EMPLOYERS' LIABILITY ANY PROPRIETOR/PARTNER/EXECUTIVE OFFICER/MEMBER EXCLUDED? If yes, describe under SPECIAL PROVISIONS below				WC STATU-TORY LIMITS OTH-ER E.L. EACH ACCIDENT E.L. DISEASE - EA EMPLOYEE E.L. DISEASE - POLICY LIMIT	 $ $ $
A C		OTHER Pollution Li Motor Truck Cargo	PCC398333708 IMP7636064	04/15/10 04/15/10	04/15/11 04/15/11	$1,000,000 $100,000 Vehicle $2500 Deductible	

DESCRIPTION OF OPERATIONS / LOCATIONS / VEHICLES / EXCLUSIONS ADDED BY ENDORSEMENT / SPECIAL PROVISIONS

CERTIFICATE HOLDER

Clean Earth of North Jersey
115 Jacobs Avenue
Kearny, NJ 3207032

CANCELLATION

SHOULD ANY OF THE ABOVE DESCRIBED POLICIES BE CANCELLED BEFORE THE EXPIRATION DATE THEREOF, THE ISSUING INSURER WILL ENDEAVOR TO MAIL 10 DAYS WRITTEN NOTICE TO THE CERTIFICATE HOLDER NAMED TO THE LEFT, BUT FAILURE TO DO SO SHALL IMPOSE NO OBLIGATION OR LIABILITY OF ANY KIND UPON THE INSURER, ITS AGENTS OR REPRESENTATIVES.

AUTHORIZED REPRESENTATIVE

© ACORD CORPORATION 1988

04/15/2010 09:11 9733473564 ETGI PAGE 01/01

Richard J. Codey
Acting Governor

State of New Jersey
Department of Environmental Protection
Division of Solid and Hazardous Waste
401 East State Street
P.O. Box 414
Trenton, New Jersey 08625-0414
Tel. # (609) 292-9880
Fax. # (609)-633-9839
http://www.state.nj.us/dep/dshw/

Bradley M. Campbe
Commissioner

August 1, 2005

Robert Fixter
President
Clean Earth of North Jersey, Inc.
115 Jacobus Avenue
Kearny, New Jersey 07032

Re: Continuation of Expiring Permit, Clean Earth of North Jersey, Inc., Kearny, Hudson County, USEPA ID No. NJD 991 291 105, NJ Hazardous Waste Facility Permit No.: 0907N1HP14

Dear Mr. Fixter:

The purpose of this letter is to clarify the current status of Hazardous Waste Facility Permit No. 0907N1HP14 issued to Clean Earth of North Jersey, Inc. (CENJ) for the above referenced facility.

The current hazardous waste facility permit for the CENJ facility lists an expiration date of August 18, 2004. However, CENJ has submitted an application for renewal of the hazardous waste facility permit that is currently under review by the Division. Therefore, Hazardous Waste Facility Permit No. 0907N1HP14, and any subsequent modifications, shall remain in effect and enforceable until such time as the Division makes a final determination regarding the renewal application.

Should you have any questions regarding this matter, please call John Scott of my staff at 609-984-2040 or e-mail him at john.scott@dep.state.nj.us.

Very truly yours,

Anthony Fontana, Chief
Bureau of Hazardous Waste and Transfer Facilities

C: Barry Tornick, USEPA, Region II
Jeffery Sterling, BHWCE-Northern
Document: Continuation of permit

JON S. CORZINE
Governor

State of New Jersey
DEPARTMENT OF ENVIRONMENTAL PROTECTION

LISA P. JACKSON
Commissioner

Solid & Hazardous Waste Management Program
P.O. Box 414
Trenton, NJ 08625-0414
Tel. No. (609) 984-5950
Fax. No. (609) 633-9839
http://www.state.nj.us/dep/dshw

Solid and Hazardous Waste Facility Permit

Under the provisions of N.J.S.A. 13:1E-1 et seq. known as the Solid Waste Management Act, this permit is hereby issued to:

CLEAN EARTH OF NORTH JERSEY INC
105 Jacobus Ave
Kearny, New Jersey 07032

For the Purpose of Operating a:	Solid and Hazardous Waste Treatment, Storage and Transfer Facility
Lot & Block Nos:	14,14A, 289
In the Municipality of:	Kearny Town
County:	Hudson
Under Facility Permit No.:	HWP050002
EPA ID No.:	NJD991291105

This permit is subject to compliance with all conditions specified herein and all regulations promulgated by the Department of Environmental Protection.

This permit shall not prejudice any claim the State may have to riparian land, nor does it allow the permittee to fill or alter or allow to be filled or altered in any way, lands that are deemed to be riparian, wetlands, stream encroachment areas or flood plains, or that are within the Coastal Area Facility Review Act (CAFRA) zone or are subject to the Pinelands Protection Act of 1979, nor shall it allow the discharge of pollutants to waters of this State without prior acquisition of the necessary grants, permits, or approvals from the Department of Environmental Protection or the U.S. Environmental Protection Agency.

July 18, 1994
Issuance Date

Anthony Fontana, Chief
Bureau of Solid and Hazardous Waste Permitting – North

October 23, 2006
Latest Modification Date

August 18, 2004
Expiration Date

James E. McGreevey
Governor

State of New Jersey

Department of Environmental Protection
Division of Solid and Hazardous Waste
401 East State Street
P.O. Box 414
Trenton, New Jersey 08625-0414
Phone # (609) 292-9880
Fax # (609) 633-9839

Bradley M. Campbell
Commissioner

Hazardous Waste Facility Permit

Under the provisions of N. J. S. A. 13: 1E I et seq. known as the Solid Waste Management Act, this permit is hereby issued to:

Clean Earth of North Jersey, Inc.
105 Jacobus Avenue
Kearny, New Jersey 07032

For the Purpose of Operating a:	Hazardous Waste Treatment, Storage and Transfer Facility
On Lot No.:	14, 14A
Block No.:	289
In the Municipality of:	Kearny Town
County:	Hudson
Under Facility Permit No.:	0907N1HP14
USEPA ID No.:	NJD 991 291 105

This permit is subject to compliance with all conditions specified herein and all regulations promulgated by the Department of Environmental Protection.

This permit shall not prejudice any claim the State may have to riparian land, nor does it allow the permittee to fill or alter or allow to be filled or altered in any way, lands that are deemed to be riparian, wetlands, stream encroachment areas or flood plains, or that are within the Coastal Area Facility Review Act (CAFRA) zone or are subject to the Pinelands Protection Act of 1979, nor shall it allow the discharge of pollutants to waters of this State without prior acquisition of the necessary grants, permits, or approvals from the Department of Environmental Protection or the U.S. Environmental Protection Agency. This permit does not authorize the operation of a Major Hazardous Waste Facility as defined at N.J.A.C. 7:26G-14.6.

Thomas Sherman
Assistant Director,
Division of Solid and Hazardous Waste

July 18, 1994
Issuance Date
June 30, 1998
Reissuance Date
July 30, 1998
Effective Date

November 23, 1998	August 10, 1999	May 22, 2002
Modification Date	Modification Date	Modification Date
December 30, 1998	September 25, 2001	August 18, 2004
Modification Date	Modification Date	Expiration Date

ACORD CERTIFICATE OF LIABILITY INSURANCE

1/1/2011

DATE (MM/DD/YYYY) 12/9/2009

PRODUCER
LOCKTON COMPANIES, LLC
5847 SAN FELIPE, SUITE 320
HOUSTON TX 77057
866-260-3538

THIS CERTIFICATE IS ISSUED AS A MATTER OF INFORMATION ONLY AND CONFERS NO RIGHTS UPON THE CERTIFICATE HOLDER. THIS CERTIFICATE DOES NOT AMEND, EXTEND OR ALTER THE COVERAGE AFFORDED BY THE POLICIES BELOW.

INSURERS AFFORDING COVERAGE	NAIC #
INSURER A: ACE American Insurance Company	22667
INSURER B: Indemnity Insurance Co of North America	43575
INSURER C: ACE Property & Casualty Insurance Co	20699
INSURER D:	
INSURER E:	

INSURED
1300299 WASTE MANAGEMENT HOLDINGS, INC. & ALL AFFILIATED, RELATED & SUBSIDIARY COMPANIES INCLUDING: WASTE MANAGEMENT OF NEW JERSEY, INC. #2433
100 AVENUE A
NEWARK NJ 07114

COVERAGES AJ

THIS CERTIFICATE OF INSURANCE DOES NOT CONSTITUTE A CONTRACT BETWEEN THE ISSUING INSURER(S), AUTHORIZED REPRESENTATIVE OR PRODUCER, AND THE CERTIFICATE HOLDER.

THE POLICIES OF INSURANCE LISTED BELOW HAVE BEEN ISSUED TO THE INSURED NAMED ABOVE FOR THE POLICY PERIOD INDICATED. NOTWITHSTANDING ANY REQUIREMENT, TERM OR CONDITION OF ANY CONTRACT OR OTHER DOCUMENT WITH RESPECT TO WHICH THIS CERTIFICATE MAY BE ISSUED OR MAY PERTAIN, THE INSURANCE AFFORDED BY THE POLICIES DESCRIBED HEREIN IS SUBJECT TO ALL THE TERMS, EXCLUSIONS AND CONDITIONS OF SUCH POLICIES. AGGREGATE LIMITS SHOWN MAY HAVE BEEN REDUCED BY PAID CLAIMS.

INSR LTR	ADD'L INSRD	TYPE OF INSURANCE	POLICY NUMBER	POLICY EFFECTIVE DATE (MM/DD/YY)	POLICY EXPIRATION DATE (MM/DD/YY)	LIMITS	
A		GENERAL LIABILITY X COMMERCIAL GENERAL LIABILITY [ ] CLAIMS MADE [X] OCCUR X XCU INCLUDED X ISO FORM CG 00011207 GEN'L AGGREGATE LIMIT APPLIES PER: [ ] POLICY [X] PRO-JECT [X] LOC	HDO G24938384	1/1/2010	1/1/2011	EACH OCCURRENCE DAMAGE TO RENTED PREMISES (Ea occurence) MED EXP (Any one person) PERSONAL & ADV INJURY GENERAL AGGREGATE PRODUCTS - COMP/OP AGG	$ 5,000,000 $ 5,000,000 $ XXXXXXX $ 5,000,000 $ 6,000,000 $ 6,000,000
A		AUTOMOBILE LIABILITY X ANY AUTO X ALL OWNED AUTOS [ ] SCHEDULED AUTOS X HIRED AUTOS X NON-OWNED AUTOS X MCS-90	ISA H08583742	1/1/2010	1/1/2011	COMBINED SINGLE LIMIT (Ea accident) BODILY INJURY (Per person) BODILY INJURY (Per accident) PROPERTY DAMAGE (Per accident)	$ 1,000,000 $ XXXXXXX $ XXXXXXX $ XXXXXXX
		GARAGE LIABILITY [ ] ANY AUTO	NOT APPLICABLE			AUTO ONLY - EA ACCIDENT OTHER THAN AUTO ONLY: EA ACC AGG	$ XXXXXXX $ XXXXXXX $ XXXXXXX
C		EXCESS/UMBRELLA LIABILITY X OCCUR [ ] CLAIMS MADE [ ] DEDUCTIBLE [X] UMBRELLA FORM [ ] RETENTION $	XOO G24902456	1/1/2010	1/1/2011	EACH OCCURRENCE AGGREGATE	$ 15,000,000 $ 15,000,000 $ XXXXXXX $ XXXXXXX $ XXXXXXX
B		WORKERS COMPENSATION AND EMPLOYERS' LIABILITY	WLR C4570936A (AOS)	1/1/2010	1/1/2011	X WC STATUTORY LIMITS [ ] OTHER	
A		ANY PROPRIETOR/PARTNER/EXECUTIVE OFFICER/MEMBER EXCLUDED? (Mandatory in NH) If yes, describe under SPECIAL PROVISIONS below — Y/N: N	WLR C45709371 (CA)	1/1/2010	1/1/2011	E.L. EACH ACCIDENT	$ 3,000,000
A			SCF C45709383 (WI)	1/1/2010	1/1/2011	E.L. DISEASE - EA EMPLOYEE E.L. DISEASE - POLICY LIMIT	$ 3,000,000 $ 3,000,000
A		OTHER EXCESS AUTO LIABILITY	XTR H08583754	1/1/2010	1/1/2011	COMBINED SINGLE LIMIT $9,000,000 (EACH ACCIDENT)	

DESCRIPTION OF OPERATIONS/LOCATIONS/VEHICLES/EXCLUSIONS ADDED BY ENDORSEMENT/SPECIAL PROVISIONS

CANCELLATION: 30 DAYS EXCEPT 10 DAYS NOTICE FOR NON-PAYMENT. BLANKET WAIVER OF SUBROGATION IS GRANTED IN FAVOR OF CERTIFICATE HOLDER ON ALL POLICIES WHERE AND TO THE EXTENT REQUIRED BY WRITTEN CONTRACT WHERE PERMISSIBLE BY LAW. CERTIFICATE HOLDER IS NAMED AS AN ADDITIONAL INSURED (EXCEPT FOR WORKERS' COMP/EL) WHERE AND TO THE EXTENT REQUIRED BY WRITTEN CONTRACT.

CERTIFICATE HOLDER

3458270

INDUSTRIAL WASTE TECHNOLOGIES
22 HILLARY STREET
WEST PATERSON NJ 07424

CANCELLATION

SHOULD ANY OF THE ABOVE DESCRIBED POLICIES BE CANCELLED BEFORE THE EXPIRATION DATE THEREOF, THE ISSUING INSURER WILL ENDEAVOR TO MAIL 30 DAYS WRITTEN NOTICE TO THE CERTIFICATE HOLDER NAMED TO THE LEFT, BUT FAILURE TO DO SO SHALL IMPOSE NO OBLIGATION OR LIABILITY OF ANY KIND UPON THE INSURER, ITS AGENTS OR REPRESENTATIVES.

AUTHORIZED REPRESENTATIVE

© 1988-2009 ACORD CORPORATION. All rights reserved

IMPORTANT

If the certificate holder is an ADDITIONAL INSURED, the policy(ies) must be endorsed. A statement on this certificate does not confer rights to the certificate holder in lieu of such endorsement(s).

If SUBROGATION IS WAIVED, subject to the terms and conditions of the policy, certain policies may require an endorsement. A statement on this certificate does not confer rights to the certificate holder in lieu of such endorsement(s).

DISCLAIMER

The Certificate of Insurance on the reverse side of this form does not constitute a contract between the issuing insurer(s), authorized representative or producer, and the certificate holder, nor does it affirmatively or negatively amend, extend or alter the coverage afforded by the policies listed thereon.

NJM Insurance Group

NEW JERSEY MANUFACTURERS INSURANCE COMPANY
301 Sullivan Way, West Trenton, NJ 08628
609-883-1300 / www.NJM.com

CERTIFICATE OF WORKERS COMPENSATION INSURANCE

INSURED

ENVIRONMENTAL TRANSPORT GROUP INC
PO BOX 296
FLANDERS NJ 07836

PROJECT OPERATIONS IN THE STATE OF NEW JERSEY

POLICY NO. W/17012-6 **EFFECTIVE** 01/06/2009 **EXPIRING** 01/06/2010

This policy insures the obligations imposed upon the Insured by the provisions of the Workers Compensation Law of New Jersey. The limits of liability for Part Two - Employers Liability - under this policy are as follows: Bodily Injury by Accident $1,000,000 each accident, and for Bodily Injury by Disease $1,000,000 policy limit, $1,000,000 each employee.

NOTE: Waiver of subrogation and/or inclusion of interests not owned in the majority by the insured are not permitted under this policy by New Jersey Workers Compensation Statute.

The issuance of this Certificate imposes no liability on the Company beyond that provided by the terms, conditions and exclusions of such policy as are described above by policy number, effective and expiration dates.

CERTIFICATE HOLDER

CLEAN EARTH OF NORTH JERSEY
ATT: ACCTS PAYABLE
115 JACOBUS AVE
KEARNY NJ 07032

12/19/2008
002/002
ENVIRONMENTAL TRANSPORT
01/20/2008 11:34 FAX 8733473564

2510-CD-LRWM0056 Rev. 4/00

PENNSYLVANIA DEPARTMENT OF ENVIRONMENTAL PROTECTION
HAZARDOUS WASTE TRANSPORTER LICENSE

PA-AH0104
HWT LICENSE NO.

03/31/2011
EXPIRATION DATE

40
NO. OF COPIES

VOID UNLESS VALIDATED
VALIDATED
11/20/2008

NAME & ADDRESS OF LICENSEE
ENVIRONMENTAL TRANSPORT GROUP, INC.

PO BOX 296
FLANDERS NJ 07836-0296

BUSINESS PHONE NO.	24-HOUR PHONE NO.
800-598-3844	800-598-3844

SEE REVERSE FOR ADDITIONAL CONDITIONS

ITEM # 8

TESTING LABORATORY CERTIFICATION

BT 200.200 (WO# 12)

NEW YORK STATE DEPARTMENT OF HEALTH
WADSWORTH CENTER
RICHARD F. DAINES, M.D.

Expires 12:01 AM April 01, 2011
Issued April 01, 2010

CERTIFICATE OF APPROVAL FOR LABORATORY SERVICE

Issued in accordance with and pursuant to section 502 Public Health Law of New York State

MR. RAJA ABOUZAKI
SCHNEIDER LABORATORIES INC
2512 WEST CARY STREET
RICHMOND, VA 23220

NY Lab Id No: 11413
EPA Lab Code: VA00902

is hereby APPROVED as an Environmental Laboratory in conformance with the National Environmental Laboratory Accreditation Conference Standards for the category ENVIRONMENTAL ANALYSES: SOLID AND HAZARDOUS WASTE
All approved analytes are listed below:

Acrylates	
Acrolein (Propenal)	EPA 8260B
Acrylonitrile	EPA 8260B
Characteristic Testing	
Ignitability	EPA 1010
Chlorinated Hydrocarbon Pesticides	
4,4'-DDD	EPA 8081A
4,4'-DDE	EPA 8081A
4,4'-DDT	EPA 8081A
Aldrin	EPA 8081A
alpha-BHC	EPA 8081A
beta-BHC	EPA 8081A
Chlordane Total	EPA 8081A
delta-BHC	EPA 8081A
Dieldrin	EPA 8081A
Endosulfan I	EPA 8081A
Endosulfan II	EPA 8081A
Endosulfan sulfate	EPA 8081A
Endrin	EPA 8081A
Endrin aldehyde	EPA 8081A
Heptachlor	EPA 8081A
Heptachlor epoxide	EPA 8081A
Lindane	EPA 8081A
Methoxychlor	EPA 8081A
Toxaphene	EPA 8081A
Chlorinated Hydrocarbons	
1,2,4-Trichlorobenzene	EPA 8270C
2-Chloronaphthalene	EPA 8270C
Chlorinated Hydrocarbons	
Hexachlorobenzene	EPA 8270C
Hexachlorobutadiene	EPA 8270C
Hexachlorocyclopentadiene	EPA 8270C
Hexachloroethane	EPA 8270C
Haloethers	
4-Bromophenylphenyl ether	EPA 8270C
4-Chlorophenylphenyl ether	EPA 8270C
Bis(2-chloroisopropyl) ether	EPA 8270C
Bis(2-chloroethoxy)methane	EPA 8270C
Metals	
Barium, Total	EPA 6010B
Cadmium, Total	EPA 6010B
Chromium, Total	EPA 6010B
Lead, Total	EPA 6010B
	EPA 7420
Nickel, Total	EPA 6010B
Silver, Total	EPA 6010B
Metals II	
Arsenic, Total	EPA 6010B
Chromium VI	EPA 7196A
Mercury, Total	EPA 7471A
Selenium, Total	EPA 6010B
Miscellaneous	
Hydrogen Ion (pH)	EPA 9040B
	EPA 9045C

Serial No.: 41822

Property of the New York State Department of Health. Certificates are valid only at the [illegible] shown, must be conspicuously posted, and are printed on secure paper. Continued accreditation depends on successful ongoing participation in the Program. Consumers are urged to call [illegible] to verify the laboratory's accreditation status.

NELAP Recognized

NEW YORK STATE DEPARTMENT OF HEALTH
WADSWORTH CENTER
RICHARD F. DAINES, M.D.

Expires 12:01 AM April 01, 2011
Issued April 01, 2010

CERTIFICATE OF APPROVAL FOR LABORATORY SERVICE

Issued in accordance with and pursuant to section 502 Public Health Law of New York State

MR. RAJA ABOUZAKI
SCHNEIDER LABORATORIES INC
2512 WEST CARY STREET
RICHMOND, VA 23220

NY Lab Id No: 11413
EPA Lab Code: VA00902

is hereby APPROVED as an Environmental Laboratory in conformance with the National Environmental Laboratory Accreditation Conference Standards for the category ENVIRONMENTAL ANALYSES SOLID AND HAZARDOUS WASTE
All approved analytes are listed below:

Nitroaromatics and Isophorone	
2,4-Dinitrotoluene	EPA 8270C
2,6-Dinitrotoluene	EPA 8270C
Isophorone	EPA 8270C
Nitrobenzene	EPA 8270C
Nitrosoamines	
N-Nitrosodi-n-propylamine	EPA 8270C
Phthalate Esters	
Benzyl butyl phthalate	EPA 8270C
Bis(2-ethylhexyl) phthalate	EPA 8270C
Diethyl phthalate	EPA 8270C
Dimethyl phthalate	EPA 8270C
Di-n-butyl phthalate	EPA 8270C
Di-n-octyl phthalate	EPA 8270C
Polychlorinated Biphenyls	
PCB-1016	EPA 8082
PCB-1221	EPA 8082
PCB-1232	EPA 8082
PCB-1242	EPA 8082
PCB-1248	EPA 8082
PCB-1254	EPA 8082
PCB-1260	EPA 8082
Polynuclear Aromatic Hydrocarbons	
Acenaphthene	EPA 8270C
Acenaphthylene	EPA 8270C
Anthracene	EPA 8270C
Benzo(a)anthracene	EPA 8270C
Benzo(a)pyrene	EPA 8270C
Benzo(b)fluoranthene	EPA 8270C
Benzo(ghi)perylene	EPA 8270C
Benzo(k)fluoranthene	EPA 8270C
Chrysene	EPA 8270C
Dibenz(a,h)anthracene	EPA 8270C
Fluoranthene	EPA 8270C
Fluorene	EPA 8270C
Indeno(1,2,3-cd)pyrene	EPA 8270C
Naphthalene	EPA 8270C
Phenanthrene	EPA 8270C
Pyrene	EPA 8270C
Priority Pollutant Phenols	
2,4,6-Trichlorophenol	EPA 8270C
2,4-Dichlorophenol	EPA 8270C
2-Methylphenol	EPA 8270C
2-Nitrophenol	EPA 8270C
4,6-Dinitro-2-methylphenol	EPA 8270C
4-Chloro-3-methylphenol	EPA 8270C
4-Nitrophenol	EPA 8270C
Pentachlorophenol	EPA 8270C
Phenol	EPA 8270C
Chlorinated Aromatics	
1,2-Dichlorobenzene	EPA 8270C

Serial No.: 41822

Property of the New York State Department of Health. Certificates are valid only as they appear as shown, must be conspicuously posted, and are printed on secure paper. Continued recognition depends on successful ongoing participation in the Program. Customers are urged to call (518) 485-5570 to verify the laboratory's accreditation status.

NELAP Recognized

NEW YORK STATE DEPARTMENT OF HEALTH
WADSWORTH CENTER
RICHARD F. DAINES, M.D.

Expires 12:01 AM April 01, 2011
Issued April 01, 2010

CERTIFICATE OF APPROVAL FOR LABORATORY SERVICE

Issued in accordance with and pursuant to section 502 Public Health Law of New York State

MR. RAJA ABOUZAKI
SCHNEIDER LABORATORIES INC
2512 WEST CARY STREET
RICHMOND, VA 23220

NY Lab Id No: 11413
EPA Lab Code: VA00902

is hereby APPROVED as an Environmental Laboratory in conformance with the National Environmental Laboratory Accreditation Conference Standards for the category
ENVIRONMENTAL ANALYSES: SOLID AND HAZARDOUS WASTE
All approved analytes are listed below:

Purgeable Aromatics		**Purgeable Halocarbons**	
Benzene	EPA 8021B	Dichlorodifluoromethane	EPA 8260B
	EPA 8260B	Vinyl chloride	EPA 8260B
Ethyl benzene	EPA 8021B		
Toluene	EPA 8021B	**Purgeable Organics**	
	EPA 8260B	4-Methyl-2-Pentanone	EPA 8260B
Total Xylenes	EPA 8021B		
		Preparation Methods	
Purgeable Halocarbons			EPA 1311
1,1,1-Trichloroethane	EPA 8260B		EPA 3005A
1,1,2,2-Tetrachloroethane	EPA 8260B		EPA 3010A
1,1,2-Trichloroethane	EPA 8260B		EPA 3020A
1,1-Dichloroethane	EPA 8260B		EPA 3031
1,1-Dichloroethene	EPA 8260B		EPA 3040A
1,2,3-Trichloropropane	EPA 8260B		EPA 3050B
1,2-Dichloroethane	EPA 8260B		EPA 3550B
1,2-Dichloropropane	EPA 8260B		EPA 5030B
2-Chloroethylvinyl ether	EPA 8260B		
Bromoform	EPA 8260B		
Bromomethane	EPA 8260B		
Carbon tetrachloride	EPA 8260B		
Chloroethane	EPA 8260B		
Chloroform	EPA 8260B		
Chloromethane	EPA 8260B		
cis-1,3-Dichloropropene	EPA 8260B		
Dichlorodifluoromethane	EPA 8260B		
Methylene chloride	EPA 8260B		
Tetrachloroethene	EPA 8260B		
trans-1,3-Dichloropropene	EPA 8260B		
Trichloroethene	EPA 8260B		

Serial No.: 41822

Property of the New York State Department of Health. Certificates are valid only at the location shown, must be conspicuously posted, and are printed on secure paper. Continued accreditation depends on successful ongoing participation in the Program. Visitors are urged to call (518) 485-5570 to verify the laboratory's accreditation status.

NELAP Recognized

NEW YORK STATE DEPARTMENT OF HEALTH
WADSWORTH CENTER
RICHARD F. DAINES, M.D.

Expires 12:01 AM April 01, 2011
Issued April 01, 2010

CERTIFICATE OF APPROVAL FOR LABORATORY SERVICE

Issued in accordance with and pursuant to section 502 Public Health Law of New York State

MR. RAJA ABOUZAKI
SCHNEIDER LABORATORIES INC
2512 WEST CARY STREET
RICHMOND, VA 23220

NY Lab Id No: 11413
EPA Lab Code: VA00902

is hereby APPROVED as an Environmental Laboratory in conformance with the National Environmental Laboratory Accreditation Conference Standards for the category ENVIRONMENTAL ANALYSES NON POTABLE WATER
All approved analytes are listed below:

Acrylates	
Acrolein (Propenal)	EPA 624
	EPA 8260B
Acrylonitrile	EPA 624
	EPA 8260B
Amines	
Pyridine	EPA 8270C
Benzidines	
3,3'-Dichlorobenzidine	EPA 625
	EPA 8270C
Benzidine	EPA 625
	EPA 8270C
Chlorinated Hydrocarbon Pesticides	
4,4'-DDD	EPA 608
	EPA 8081A
4,4'-DDE	EPA 608
	EPA 8081A
4,4'-DDT	EPA 608
	EPA 8081A
Aldrin	EPA 608
	EPA 8081A
alpha-BHC	EPA 608
	EPA 8081A
beta-BHC	EPA 608
	EPA 8081A
Chlordane Total	EPA 608
	EPA 8081A
delta-BHC	EPA 608

Chlorinated Hydrocarbon Pesticides	
delta-BHC	EPA 8081A
Dieldrin	EPA 608
	EPA 8081A
Endosulfan I	EPA 608
	EPA 8081A
Endosulfan II	EPA 608
	EPA 8081A
Endosulfan sulfate	EPA 608
	EPA 8081A
Endrin	EPA 608
	EPA 8081A
Endrin aldehyde	EPA 608
	EPA 8081A
Heptachlor	EPA 608
	EPA 8081A
Heptachlor epoxide	EPA 608
	EPA 8081A
Lindane	EPA 608
	EPA 8081A
Methoxychlor	EPA 8081A
	SM 18-20 6630C
Toxaphene	EPA 608
	EPA 8081A
Chlorinated Hydrocarbons	
1,2,4-Trichlorobenzene	EPA 625
	EPA 8270C
2-Chloronaphthalene	EPA 625
	EPA 8270C

Serial No.: 41821

Property of the New York State Department of Health. Certificates are valid only at the address shown, must be conspicuously posted, and are printed on secure paper. Continued accreditation depends on successful ongoing participation in the Program. Consumers are urged to call (518) 485-5570 to verify the laboratory's accreditation status.

NELAP Recognized

NEW YORK STATE DEPARTMENT OF HEALTH
WADSWORTH CENTER
RICHARD F. DAINES, M.D.

Expires 12:01 AM April 01, 2011
Issued April 01, 2010

CERTIFICATE OF APPROVAL FOR LABORATORY SERVICE

Issued in accordance with and pursuant to section 502 Public Health Law of New York State.

MR. RAJA ABOUZAKI
SCHNEIDER LABORATORIES INC
2512 WEST CARY STREET
RICHMOND, VA 23220

NY Lab Id No: 11413
EPA Lab Code: VA00902

is hereby APPROVED as an Environmental Laboratory in conformance with the National Environmental Laboratory Accreditation Conference Standards for the category
ENVIRONMENTAL ANALYSES NON POTABLE WATER
All approved analytes are listed below:

Chlorinated Hydrocarbons		**Nitroaromatics and Isophorone**	
Hexachlorobenzene	EPA 625	2,4-Dinitrotoluene	EPA 625
	EPA 8270C		EPA 8270C
Hexachlorobutadiene	EPA 625	2,6-Dinitrotoluene	EPA 625
	EPA 8260B		EPA 8270C
	EPA 8270C	Isophorone	EPA 625
Hexachlorocyclopentadiene	EPA 625		EPA 8270C
	EPA 8270C	Nitrobenzene	EPA 625
Hexachloroethane	EPA 625		EPA 8270C
	EPA 8270C		
		Nitrosoamines	
Chlorophenoxy Acid Pesticides		N-Nitrosodimethylamine	EPA 625
2,4,5-T	EPA 8151A		EPA 8270C
	SM 18-20 6640B	N-Nitrosodi-n-propylamine	EPA 625
2,4,5-TP (Silvex)	EPA 8151A		EPA 8270C
	SM 18-20 6640B	N-Nitrosodiphenylamine	EPA 625
2,4-D	EPA 8151A		EPA 8270C
	SM 18-20 6640B		
		Phthalate Esters	
Haloethers		Benzyl butyl phthalate	EPA 625
4-Bromophenylphenyl ether	EPA 625		EPA 8270C
	EPA 8270C	Bis(2-ethylhexyl) phthalate	EPA 625
4-Chlorophenylphenyl ether	EPA 625		EPA 8270C
	EPA 8270C	Diethyl phthalate	EPA 625
Bis(2-chloroisopropyl) ether	EPA 625		EPA 8270C
	EPA 8270C	Dimethyl phthalate	EPA 625
Bis(2-chloroethoxy)methane	EPA 625		EPA 8270C
	EPA 8270C	Di-n-butyl phthalate	EPA 625
Bis(2-chloroethyl)ether	EPA 625		EPA 8270C
	EPA 8270C	Di-n-octyl phthalate	EPA 625

Serial No.: 41821

Property of the New York State Department of Health. Certificates are valid only at the address shown, must be conspicuously posted, and are printed on secure paper. Continued accreditation depends on successful ongoing participation in the Program. Consumers are urged to call (518) [illegible] to verify the laboratory's accreditation status.

NELAP Recognized

NEW YORK STATE DEPARTMENT OF HEALTH
WADSWORTH CENTER
RICHARD F. DAINES, M.D.

Expires 12:01 AM April 01, 2011
Issued April 01, 2010

CERTIFICATE OF APPROVAL FOR LABORATORY SERVICE

Issued in accordance with and pursuant to section 502 Public Health Law of New York State

MR. RAJA ABOUZAKI
SCHNEIDER LABORATORIES INC
2512 WEST CARY STREET
RICHMOND, VA 23220

NY Lab Id No: 11413
EPA Lab Code: VA00902

is hereby APPROVED as an Environmental Laboratory in conformance with the National Environmental Laboratory Accreditation Conference Standards for the category ENVIRONMENTAL ANALYSES NON POTABLE WATER
All approved analytes are listed below:

Phthalate Esters	
Di-n-octyl phthalate	EPA 8270C
Polychlorinated Biphenyls	
PCB-1016	EPA 608 EPA 8082
PCB-1221	EPA 608 EPA 8082
PCB-1232	EPA 608 EPA 8082
PCB-1242	EPA 608 EPA 8082
PCB-1248	EPA 608 EPA 8082
PCB-1254	EPA 608 EPA 8082
PCB-1260	EPA 608 EPA 8082
Polynuclear Aromatics	
Acenaphthene	EPA 625 EPA 8270C
Acenaphthylene	EPA 625 EPA 8270C
Anthracene	EPA 625 EPA 8270C
Benzo(a)anthracene	EPA 625 EPA 8270C
Benzo(a)pyrene	EPA 625 EPA 8270C
Polynuclear Aromatics	
Benzo(b)fluoranthene	EPA 625 EPA 8270C
Benzo(ghi)perylene	EPA 625 EPA 8270C
Benzo(k)fluoranthene	EPA 625 EPA 8270C
Chrysene	EPA 625 EPA 8270C
Dibenzo(a,h)anthracene	EPA 625 EPA 8270C
Fluoranthene	EPA 625 EPA 8270C
Fluorene	EPA 625 EPA 8270C
Indeno(1,2,3-cd)pyrene	EPA 625 EPA 8270C
Naphthalene	EPA 625 EPA 8270C
Phenanthrene	EPA 625 EPA 8270C
Pyrene	EPA 625 EPA 8270C
Priority Pollutant Phenols	
2,4,5-Trichlorophenol	EPA 625 EPA 8270C
2,4,6-Trichlorophenol	EPA 625 EPA 8270C
2,4 Dichlorophenol	EPA 625

Serial No.: 41821

Property of the New York State Department of Health. Certificates are valid only at the address shown, must be conspicuously posted, and are printed on secure paper. Continued accreditation depends on successful ongoing participation in the Program. Consumers are urged to call (518) 485-3670 to verify the laboratory's accreditation status.

NELAP Recognized

NEW YORK STATE DEPARTMENT OF HEALTH
WADSWORTH CENTER
RICHARD F. DAINES, M.D.

Expires 12:01 AM April 01, 2011
Issued April 01, 2010

CERTIFICATE OF APPROVAL FOR LABORATORY SERVICE

Issued in accordance with and pursuant to section 502 Public Health Law of New York State

MR. RAJA ABOUZAKI
SCHNEIDER LABORATORIES INC
2512 WEST CARY STREET
RICHMOND, VA 23220

NY Lab Id No: 11413
EPA Lab Code: VA00002

is hereby APPROVED as an Environmental Laboratory in conformance with the National Environmental Laboratory Accreditation Conference Standards for the category
ENVIRONMENTAL ANALYSES NON POTABLE WATER
All approved analytes are listed below

Priority Pollutant Phenols	
2,4-Dichlorophenol	EPA 8270C
2,4-Dimethylphenol	EPA 625
	EPA 8270C
2,4-Dinitrophenol	EPA 625
	EPA 8270C
2-Chlorophenol	EPA 625
	EPA 8270C
2-Methyl-4,6-dinitrophenol	EPA 625
	EPA 8270C
2-Nitrophenol	EPA 625
	EPA 8270C
4-Chloro-3-methylphenol	EPA 625
	EPA 8270C
4-Nitrophenol	EPA 625
	EPA 8270C
Cresols, Total	EPA 8270C
Pentachlorophenol	EPA 625
	EPA 8270C
Phenol	EPA 625
	EPA 8270C
Purgeable Aromatics	
1,2-Dichlorobenzene	EPA 624
	EPA 8260B
	EPA 8270C
1,4-Dichlorobenzene	EPA 624
	EPA 8260B
	EPA 8270C
Benzene	EPA 624
	EPA 8260B
Chlorobenzene	EPA 624
	EPA 8260B
Ethyl benzene	EPA 624
	EPA 8260B
Toluene	EPA 624
	EPA 8260B
Total Xylenes	EPA 624
	EPA 8260B
Purgeable Halocarbons	
1,1,1-Trichloroethane	EPA 624
	EPA 8260B
1,1,2,2-Tetrachloroethane	EPA 624
	EPA 8260B
1,1,2-Trichloroethane	EPA 624
	EPA 8260B
1,1-Dichloroethane	EPA 624
	EPA 8260B
1,1-Dichloroethene	EPA 624
	EPA 8260B
1,2-Dichloroethane	EPA 624
	EPA 8260B
1,2-Dichloropropane	EPA 624
	EPA 8260B
2-Chloroethylvinyl ether	EPA 624
	EPA 8260B
Bromochloromethane	EPA 8260B
Bromodichloromethane	EPA 624

Serial No.: 41821

Property of the New York State Department of Health. Certificates are valid only at the address shown, must be conspicuously posted, and are printed on secure paper. Continued accreditation depends on successful ongoing participation in the Program. Consumers are urged to call (518) 485-5570 to verify the laboratory's accreditation status.

NELAP Recognized

NEW YORK STATE DEPARTMENT OF HEALTH
WADSWORTH CENTER
RICHARD F. DAINES, M.D.

Expires 12:01 AM April 01, 2011
Issued April 01, 2010

CERTIFICATE OF APPROVAL FOR LABORATORY SERVICE

Issued in accordance with and pursuant to section 502 Public Health Law of New York State

MR. RAJA ABOUZAKI
SCHNEIDER LABORATORIES INC
2512 WEST CARY STREET
RICHMOND, VA 23220

NY Lab Id No: 11413
EPA Lab Code: VA00902

is hereby APPROVED as an Environmental Laboratory in conformance with the National Environmental Laboratory Accreditation Conference Standards for the category
ENVIRONMENTAL ANALYSES NON POTABLE WATER
All approved analytes are listed below:

Purgeable Halocarbons		**Purgeable Halocarbons**	
Bromodichloromethane	EPA 8260B	Trichlorofluoromethane	EPA 8260B
Bromoform	EPA 624	Vinyl chloride	EPA 624
	EPA 8260B		EPA 8260B
Bromomethane	EPA 624		
	EPA 8260B	**Purgeable Organics**	
Carbon tetrachloride	EPA 624	2-Butanone (Methylethyl ketone)	EPA 8260B
	EPA 8260B		
Chloroethane	EPA 624	Barium, Total	EPA 200.7 Rev. 4.4
	EPA 8260B		EPA 6010B
Chloroform	EPA 624	Cadmium, Total	EPA 200.7 Rev. 4.4
	EPA 8260B		EPA 200.9 Rev. 2.2
Chloromethane	EPA 624		EPA 6010B
	EPA 8260B	Chromium, Total	EPA 200.7 Rev. 4.4
cis-1,3-Dichloropropene	EPA 624		EPA 200.9 Rev. 2.2
	EPA 8260B		EPA 6010B
Dibromochloromethane	EPA 624		EPA 7191
	EPA 8260B	Copper, Total	EPA 200.7 Rev. 4.4
Dichlorodifluoromethane	EPA 624		EPA 200.9 Rev. 2.2
	EPA 8260B		EPA 6010B
Methylene chloride	EPA 624	Iron, Total	EPA 200.7 Rev. 4.4
	EPA 8260B		EPA 6010B
Tetrachloroethene	EPA 624	Lead, Total	EPA 200.7 Rev. 4.4
	EPA 8260B		EPA 200.9 Rev. 2.2
trans-1,2-Dichloroethene	EPA 624		EPA 6010B
	EPA 8260B		EPA 7420
trans-1,3-Dichloropropene	EPA 624		EPA 7421
	EPA 8260B		SM 18-21 3111B (99)
Trichlorofluoromethane	EPA 624	Selenium, Total	EPA 200.7 Rev. 4.4

Serial No.: 41821

Property of the New York State Department of Health. Certificates are valid only at the address shown, must be conspicuously posted, and are printed on secure paper. Continued accreditation depends on successful ongoing participation in the Program. Consumers are urged to call (518) 485-XXXX to verify the laboratory's accreditation status.

NELAP Recognized

NEW YORK STATE DEPARTMENT OF HEALTH
WADSWORTH CENTER
RICHARD F. DAINES, M.D.

Expires 12:01 AM April 01, 2011
Issued April 01, 2010

CERTIFICATE OF APPROVAL FOR LABORATORY SERVICE

Issued in accordance with and pursuant to section 502 Public Health Law of New York State

MR. RAJA ABOUZAKI
SCHNEIDER LABORATORIES INC
2512 WEST CARY STREET
RICHMOND, VA 23220

NY Lab Id No: 11413
EPA Lab Code: VA00902

is hereby APPROVED as an Environmental Laboratory in conformance with the National Environmental Laboratory Accreditation Conference Standards for the category
ENVIRONMENTAL ANALYSES NON POTABLE WATER
All approved analytes are listed below:

Wastewater Metals I		
Manganese, Total	EPA 200.9 Rev. 2.2	
	EPA 6010B	
Silver, Total	EPA 200.7 Rev. 4.4	
	EPA 200.9 Rev. 2.2	
	EPA 6010B	
	EPA 7761	
Wastewater Metals II		
Aluminum, Total	EPA 200.7 Rev. 4.4	
	EPA 6010B	
Antimony, Total	EPA 200.7 Rev. 4.4	
	EPA 200.9 Rev. 2.2	
	EPA 6010B	
Arsenic, Total	EPA 200.7 Rev. 4.4	
	EPA 200.9 Rev. 2.2	
	EPA 6010B	
	EPA 7060A	
Beryllium, Total	EPA 200.7 Rev. 4.4	
	EPA 200.9 Rev. 2.2	
	EPA 6010B	
Chromium VI	EPA 7199A	
	SM 18-19 3500-Cr D	
Mercury, Total	EPA 245.2 Rev. 1974	
	EPA 7470A	
Selenium, Total	EPA 200.9 Rev. 2.2	
	EPA 7740	
Vanadium, Total	EPA 200.7 Rev. 4.4	
	EPA 6010B	
Zinc, Total	EPA 200.7 Rev. 4.4	
	EPA 6010B	
Wastewater Metals II		
Zinc, Total		EPA 6010B
Wastewater Metals III		
Cobalt, Total		EPA 200.7 Rev. 4.4
		EPA 6010B
Molybdenum, Total		EPA 200.7 Rev. 4.4
		EPA 6010B
Thallium, Total		EPA 200.7 Rev. 4.4
		EPA 200.9 Rev. 2.2
		EPA 6010B
Tin, Total		EPA 200.7 Rev. 4.4
		EPA 6010B
Miscellaneous		
Hydrogen Ion (pH)		EPA 9040B
Sample Preparation Methods		
		EPA 3005A
		EPA 3010A
		EPA 3020A
		EPA 3510C
		EPA 5030B

Serial No.: 41821

Property of the New York State Department of Health. Certificates are valid only at the address shown, must be conspicuously posted, and are printed on secure paper. Continued accreditation depends on successful and on participation in the Program. Consumers may call (518) 485-5570 to verify the laboratory's accreditation status.

NELAP Recognized

NEW YORK STATE DEPARTMENT OF HEALTH
WADSWORTH CENTER
RICHARD F. DAINES, M.D.

Expires 12:01 AM April 01, 2011
Issued April 01, 2010

CERTIFICATE OF APPROVAL FOR LABORATORY SERVICE

Issued in accordance with and pursuant to section 502 Public Health Law of New York State

MR. RAJA ABOUZAKI
SCHNEIDER LABORATORIES INC
2512 WEST CARY STREET
RICHMOND, VA 23220

NY Lab Id No: 11413
EPA Lab Code: VA00902

is hereby APPROVED as an Environmental Laboratory in conformance with the National Environmental Laboratory Accreditation Conference Standards for the category ENVIRONMENTAL ANALYSES POTABLE WATER.
All approved analytes are listed below:

Drinking Water Metals I	
Arsenic, Total	EPA 200.7 Rev. 4.4
	EPA 200.9 Rev. 2.2
Barium, Total	EPA 200.7 Rev. 4.4
Cadmium, Total	EPA 200.7 Rev. 4.4
	EPA 200.9 Rev. 2.2
Chromium, Total	EPA 200.7 Rev. 4.4
	EPA 200.9 Rev. 2.2
Copper, Total	EPA 200.7 Rev. 4.4
	EPA 200.9 Rev. 2.2
	SM 18-21 3111B (99)
Iron, Total	EPA 200.7 Rev. 4.4
	SM 18-21 3111B (99)
Lead, Total	EPA 200.9 Rev. 2.2
Manganese, Total	EPA 200.7 Rev. 4.4
	EPA 200.9 Rev. 2.2
Mercury, Total	EPA 245.2 Rev. 1974
Selenium, Total	EPA 200.9 Rev. 2.2
Silver, Total	EPA 200.7 Rev. 4.4
	EPA 200.9 Rev. 2.2
Zinc, Total	EPA 200.7 Rev. 4.4
Drinking Water Metals II	
Aluminum, Total	EPA 200.7 Rev. 4.4
Antimony, Total	EPA 200.9 Rev. 2.2
Beryllium, Total	EPA 200.7 Rev. 4.4
	EPA 200.9 Rev. 2.2
Nickel, Total	EPA 200.7 Rev. 4.4
	EPA 200.9 Rev. 2.2
Thallium, Total	EPA 200.9 Rev. 2.2

Serial No.: 41820

Property of the New York State Department of Health. Certificates are valid only at the address shown, must be conspicuously posted, and are printed on secure paper. Continued accreditation depends on successful ongoing participation in the Program. Consumers are urged to call (518) 485-5570 to verify the laboratory's accreditation status.

NELAP Recognized

NEW YORK STATE DEPARTMENT OF HEALTH
WADSWORTH CENTER
RICHARD F. DAINES, M.D.

Expires 12:01 AM April 01, 2011
Issued April 01, 2010

CERTIFICATE OF APPROVAL FOR LABORATORY SERVICE

Issued in accordance with and pursuant to section 502 Public Health Law of New York State

MR. RAJA ABOUZAKI
SCHNEIDER LABORATORIES INC
2512 WEST CARY STREET
RICHMOND, VA 23220

NY Lab Id No: 11413
EPA Lab Code: VA00902

is hereby APPROVED as an Environmental Laboratory for the category:
ENVIRONMENTAL ANALYSIS SOLID AND HAZARDOUS WASTE
All approved subcategories and/or analytes are listed below:

Miscellaneous

Asbestos in Friable Material	EPA 600/M4/82/02
Asbestos in Non-Friable Material-PLM	Item 198.6 of Manual (NOB by PLM)
Lead in Dust Wipes	EPA 7420
Lead in Paint	EPA 7420

Sample Preparation Methods

	APP. 14.2, HUD JUNE 1995
	EPA 3050B

Serial No.: 41823

Property of the New York State Department of Health. Certificates are valid only at the [illegible] shown, must be conspicuously posted, and are printed on secure paper. Continued accreditation depends on successful ongoing participation in the Program. Consumers are urged to call (8[illegible]) 483-5[illegible] to verify the laboratory's accreditation status.

NEW YORK STATE DEPARTMENT OF HEALTH
WADSWORTH CENTER
RICHARD F. DAINES, M.D.

Expires 12:01 AM April 01, 2011
Issued April 01, 2010

CERTIFICATE OF APPROVAL FOR LABORATORY SERVICE

Issued in accordance with and pursuant to section 502 Public Health Law of New York State

MR. RAJA ABOUZAKI
SCHNEIDER LABORATORIES INC
2512 WEST CARY STREET
RICHMOND, VA 23220

NY Lab Id No: 11413
EPA Lab Code: VA00902

is hereby APPROVED as an Environmental Laboratory in conformance with the National Environmental Laboratory Accreditation Conference Standards for the category of
ENVIRONMENTAL ANALYSES: AIR AND EMISSIONS
All approved analytes are listed below:

Metals I

Lead, Total	40 CFR PART 50 1984 APP G
	NIOSH 7082

Sample Preparation Methods

40 CFR PART 50 1984 APP E

Serial No.: 41824

Property of the New York State Department of Health. Certificates are valid only at the address shown, must be conspicuously posted, and are printed on secure paper. Continued accreditation depends on successful ongoing participation in the Program. Consumers are urged to call (518) 485-5570 to verify the laboratory's accreditation status.

NELAP Recognized

NEW YORK STATE DEPARTMENT OF HEALTH
WADSWORTH CENTER
RICHARD F. DAINES, M.D.

Expires 12:01 AM April 01, 2011
Issued April 01, 2010

CERTIFICATE OF APPROVAL FOR LABORATORY SERVICE

Issued in accordance with and pursuant to section 502 Public Health Law of New York State

MR. RAJA ABOUZAKI
SCHNEIDER LABORATORIES INC
2512 WEST CARY STREET
RICHMOND, VA 23220

NY Lab Id No: 11413
EPA Lab Code: VA00902

is hereby APPROVED as an Environmental Laboratory for the category:
ENVIRONMENTAL - NON-POTABLE AIR AND EMISSIONS
All approved subcategories and/or analytes are listed below:

Miscellaneous Air

Fibers	NIOSH 7400 A RULES

Serial No.: 41825

Property of the New York State Department of Health. Certificates are valid only at the address shown, must be conspicuously posted, and are printed on secure paper. Continued accreditation depends on successful ongoing participation in the Program. Consumers are urged to call (518) 486-1671 to verify the laboratory's accreditation status.

ITEM # 9

MSDS

BT 200.200 (WO# 12).

Material Safety Data Sheet

Date last reviewed: January 1, 2008

I. General Information

Chemical Name & Synonyms Proprietary Blend	Trade Name & Synonyms Peel Away 1
Chemical Family Alkaline	Formula Mixture
Proper DOT Shipping Name Containers 2.2 lbs. (1 kg) or smaller: ORM-D Containers greater than 2.2 lbs. (1 kg): Sodium Hydroxide Solid Mixture, 8, UN1823, PGII	DOT Hazard Classification Class 8, PGII (Corrosive Material)
Manufacturer Dumond Chemicals, Inc.	Manufacturer's Phone Number (212) 869-6350
Manufacturer's Address 1501 Broadway, New York, NY 10036	Emergency Number: (800) 457-4280

II. Ingredients

Principal Hazardous Components	CAS #	Percent	PEL	TLV
Calcium Hydroxide	1305-62-0	21	5 mg/m^3 TWA (respirable fraction)	5 mg/m^3 TWA
Magnesium Hydroxide	1309-42-8	16	None Established	None Established
Sodium Hydroxide	1310-73-2	9	2 mg/m^3 TWA	2 mg/m^3 Ceiling
Non-hazardous Ingredients	N/A	Balance	None Established	None Established

SARA 313: This product contains no chemicals that are regulated under SARA Title III, section 313.

III. Physical Data

Boiling Point (°F) Greater than 212	Specific Gravity (H_2O =1) 1.33
Vapor Pressure (mm Hg) @ 20°C same as water	Percent Volatile by Volume (%) 51.5
Vapor Density (Air=1) same as water	Evaporation Rate (Butyl Acetate =1) same as water
Solubility in Water Complete	pH 13
Appearance & Odor White paste, no odor.	

IV. Fire & Explosion Hazard Data

Flash Point (Test Method None	Autoignition Temperature None	
Flammable Limits None	LEL N/A	UEL N/A
Extinguishing Media This material is not combustible. Use media appropriate for the surrounding fire.		
Special Fire Fighting Procedures Wear full emergency equipment and NIOSH approved positive pressure SCBA. Cool containers with water.		
Unusual Fire & Explosion Hazards At elevated temperatures containers may rupture. Contents are corrosive. All personal contact should be avoided.		

HMIS Ratings	Health: 3	Flammability: 0	Reactivity: 0

V. Health Hazard Data

OSHA Permissible Exposure Limit	ACGIH Threshold Limit Value
See Section II	See Section II
Carcinogen - NTP Program	**Carcinogen - IARC**
No	No

Symptoms of Exposure

Acute Effects: Eyes: May cause severe burns with possible permanent damage. Skin: May cause chemical burns with reddening and pain. Inhalation: May cause eye and respiratory irritation. Ingestion: May cause burns to mouth and gastrointestinal corrosion.

Chronic Effects: Repeated skin contact with dilute solutions or mists may cause dermatitis.

Medical Conditions Aggravated By Exposure:

Individuals with chronic respiratory or skin diseases may be at risk from exposure.

Primary Route(s) of Entry

Eye, skin, ingestion

Emergency First Aid

Eye: Flush with water for 30 minutes. Get immediate medical attention. Skin: Flush thoroughly w/water for 15 minutes. Remove contaminated clothing. Get medical attention for irritation. Inhalation: Remove to fresh air. Get immediate medical attention. Ingestion: If conscious, give water or milk. Do not induce vomiting. Get immediate medical attention.

IV. Reactivity Data

Stability			Conditions to Avoid
	X	Unstable Stable	N/A

Incompatibility

Acids, flammable liquids, organic halogens, nitromethane and metals such as aluminum, tin or zinc.

Hazardous Polymerization			Conditions to Avoid
	X	May Occur Will Not Occur	N/A

Hazardous Decomposition

None known.

VII. Environmental Protection Procedures

Spill Response

Wear appropriate protective clothing. Collect into closable containers. Wash spill area with water. Prevent runoff from entering sewers or waterways. Report spills as required.

Waste Disposal Method

Dispose of in accordance with all state, local and federal regulations.

VIII. Special Protection Information

Eye Protection	Skin Protection
Chemical safety goggles/Faceshield	Rubber or neoprene gloves
Respiratory Protection (Specific Type)	**Ventilation Recommended**
For spray application, wear a NIOSH approved dus respirator & eye protection.	None normally required. If exposure limits are exceeded, local exhaust may be required.

Other Protection

Impervious apron, boots, safety shower, eye wash as needed.

IX. Special Precautions

Hygienic Practices in Handling & Storage

Store in a cool, well ventilated area away from acids and other incompatible substances.

Work Practices

Prevent eye and skin contact. Do not breathe mists or aerosols.

Other Precautions

Use only with appropriate protective equipment. Wash thoroughly after use.

ITEM # 10

COMPETANT PERSON

Name of the competent person: N Ramos

Field Experience: N Ramos has been a union painter for 10 years and a field supervisor for 5 yrs for Fine Painting.

Lead Supervisor Certification: Copy of N Ramos current lead supervisor certificate is as attached.

N Ramos will also be responsible for collecting the personal air samples.

ITEM # 11

LIST OF WORKERS

1. NEFTALI RAMOS

2. XAVIER YEDEZ

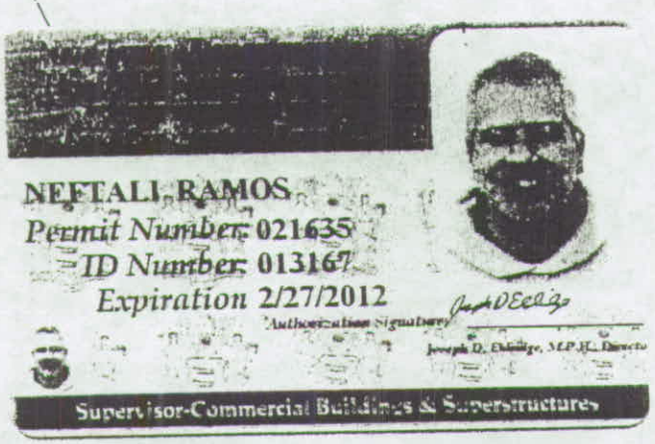
NEFTALI RAMOS
Permit Number: 021635
ID Number: 013167
Expiration 2/27/2012
Authorization Signature
Supervisor-Commercial Buildings & Superstructures

Certificate of Training

awarded to

Neftali Ramos

OSHA 29 CFR 1926.62, "Lead Exposure In Construction"

Competent Person Refresher Training

presented by

ACCESS TRAINING SERVICES, Inc.

706 West Maple Avenue, Merchantville, New Jersey 08109

(856) 665-3449

January 20, 2010

Expiration:1/20/11

Mark K. Schlager, MS, CIH

3M Respiratory Fit Test

Date: 4/4/09

Name: N. Ramos ID#: 7047

Company: Fire Painting

was successfully fit tested in:

Manuf.: 3M Model: 6211 S M L QLFT/QNFT

Manuf.: _____ Model: _____ S M L QLFT/QNFT

Manuf.: _____ Model: _____ S M L QLFT/QNFT

3M Fit Tester: Saylor Stamps

You must be fit tested at least annually and if you change to a different respirator model. Conduct a User Seal Check each time the respirator is put on.

Technical Service: 1-800-243-4630

70-0701-3323-8(411.5)R ©3M 2001

ITEM # 12

OSHA and DOH CERTIFICATIONS for TESTING LABS.

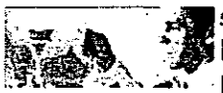

Salt Lake Technical Center (SLTC)

Blood Lead Laboratories Listed Alphabetically by Laboratory Name

Accumed Diagnostics Laboratory, Inc.
Glenn Levy, Laboratory Manager
540 Bordentown Avenue
South Amboy, NJ 08879
732-721-3763
Fax: 732-721-7600

ACL Industrial Toxicology Laboratory
Mary J Reznicek
8901 West Lincoln Avenue
P.O. Box 27167A
West Allis, WI 53227

ACM Medical Laboratory
David C Hohnadel, PhD
160 Elmgrove Park
Rochester, NY 14624

Adena Regional Medical Center
Cathy Brown
272 Hospital Road
Chillicothe, OH 45601
740-779-7650

Advanced Medical Analysis
Dr. Rubio Punzalan, Laboratory Director
1941 Walker Ave
Monrovia, CA 91016
626-305-5709
Fax: 626-305-5716
e-mail: rpunzalan@amalab.net

Advanced Toxicology Network
Susan Osborne
Clinical Laboratory
3560 Air Center Cove, Suite 101
Memphis, TN 38118
901-794-5770, ext. 251
e-mail: susan_osborne@concenta.com

American Bioclinical Laboratories
Mary L Somali
1201 North Main Street
Los Angeles, CA 90012
323-222-6688

American Clinical Reference Laboratory
Flor M. Carillo
701 Brea Canyon Road # 11
Walnut, CA 91789
909-444-0707
Fax: 909-444-0710

Angeline Elizabeth Kirby Memorial Health Center
John Turner, PhD
71 North Franklin Street
Wilkes-Barre, PA 18701
570-822-4278

ARUP Laboratories
Edward W. Ashwood, MD
500 Chipeta Way
Salt Lake City, UT 84108
e-mail: ARUPCompliance@aruplab.com

Quick Links

Table of Contents

- Program Description
- Program Directory (Updated 3/3/08)
- Evaluation Protocol (Updated 12/2009)
- State Registries (Updated 3/26/10)
- Laboratories Listed Alphabetically by: (Updated 03/17/10)
  - Laboratory Name
  - Location:
    - United States
    - Canada
    - Germany
    - México

Mayo Medical Lab - New England
Alice Michau/Cynthia Mcdonough
265 Ballardvale Street
Wilmington, MA 01887

Medical Associates Laboratory
Dawn Ebensberger, Laboratory Manager
915-13th Avenue North
Clinton, IA 52732
563-519-1828 ext. 6800
Fax: 563-243-8762
e-mail: debensberger@maclinton.com

Medtox Laboratories
Harry G McCoy, PhD
402 West County Road D
St Paul, MN 55112

Memorial Medical Center
Joan Barenfanger, MD
701 North First
Springfield, IL 62781

Memorial Medical Center of Long Beach
Chemistry Dept
2801 Atlantic Avenue
Long Beach, CA 90801
562-933-2000

Memphis Pathology Laboratory
David L Smalley, PhD
5846 Distribution Drive
Memphis, TN 38141

Metametrix Clinical Laboratory
Kris Lefebvre, Quality Assurance Specialist
3425 Corporate Way
Duluth, GA 30096
678-638-2922
Fax: 678-638-2923
e-mail: KLefebvre@metametrix.com

Methodist Hospital
Annamarie Yarger
1701 North Senate Blvd
Indianapolis, IN 46202

Mich Dept of Community Health
Bureau of Laboratories
Dr Robert Martin, Director
Blood Lead Unit
3350 North Martin Luther King Jr Blvd
P.O. Box 30035
Lansing, MI 48909

Milwaukee Health Department
E George Linke, PhD
841 North Broadway, Room 205
Milwaukee, WI 53202

Minneapolis Health Dept
Tom Oehler
250 4th Street South
Minneapolis, MN 55415
612-673-2064

Montana Public Health Laboratory
Susan Norris Zanto
P.O. Box 59604
Helena, Mt 59604

National Medical Services Inc
Margaret R Beamer
3701 Welsh Road
Willow Grove, PA 19090

Navy Env Punt Med Unit Five
Health Surveillance Laboratory
Charles Kubrock
3235 Albacore Alley
San Diego, CA 92136-5199

Core Laboratory
David J Thornton, PhD
700 Children's Drive
Columbus, OH 43205
614-722-5335
Fax: 614-722-5308
e-mail: david.thornton@nationwidechildrens.org

Children's Hospital Los Angeles
Department of Pathology, Laboratory Medicine
Hu Wong
4650 Sunset Boulevard, Mail Stop #32
Los Angeles, CA 90027-6062
323-361-2437
Fax: 323-361-1087
e-mail: Hwong@chla.usc.edu

Children's Hospital National Med Center
J Hicks, PhD
111 Michigan Avenue NW
Washington, DC 20010

Children's Hospital of Buffalo
Kaleida Health Systems
Philip K Li, PhD
Clinical Laboratories
219 Bryant Street
Buffalo, NY 14222

Children's Mercy Hospital
David Zwick, MD
2401 Gillham Road
Kansas City, MO 64108
816-234-3234
816-234-3828
Fax: 816-802-1492
e-mail: dzwick@cmh.edu

Cincinnati Department of Health
James C Reynolds
3101 Burnet Avenue
Cincinnati, OH 45229-3098

Cleveland Clinic Foundation
W R Hart, MD, Lab Med L21
9500 Euclid Avenue
Cleveland, OH 44195

Cleveland Dept of Public Health
Lead Laboratory
Neil Conway, PhD
4242 Lorain Avenue
Cleveland, OH 44113
216-664-4882

Clinical Laboratories of Hawaii, LLP
Tess Walsh
97-2135 Fort Weaver Road, Suite 300
Ewa Bearch, HI 96706
808-680-7232
Fax: 808-677-7990

Clinical Pathology Laboratories, Inc.
Richard Sokol
9200 Wall Street
Austin TX 78754
512-873-1692

Clinical Reference Lab
8433 Quivera Road
Lenexa, KS 66215
913-492-3652

Columbia University
Joseph Graziano, PhD
Mailman School of Public Health
Environmental Health Sciences Department
722 West 168th Street
New York, NY 10032
212-305-1678
Fax 212-305-3857
e-mail: jg24@columbia.edu

New York State Department of Health

Clinical Laboratory Permit

PFI: 4112 -

CLIA: 17D0667123

Clinical Reference Laboratory

8433 Quivira Road

Lenexa KS 66215

Director: Robert L. Stout, Ph.D.

Owner: Clinical Reference Laboratory Inc

is hereby authorized to perform laboratory procedures at the above location in the following categories in accordance with Article 5, Title V, Section 575 of the Public Health Law. This permit shall become void upon a change in the director, owner or location of the laboratory, and an application for a new permit shall be made to the Department.

Clinical Chemistry
Cytokines
Diagnostic Immunology
Diagnostic Services Serology
Endocrinology
Hematology
Cellular Hematology
Coagulation
Cytohematology Diagnostic
Human Immunodeficiency Virus -General
Oncology
Soluble Tumor Markers
Toxicology
Blood Lead
Clinical Toxicology-Comprehensive
Forensic Toxicology-Comprehensive
Trace Elements
Urinalysis
Urine Pregnancy Testing

Duplicate

Effective Date: July 1, 2009

Expiration Date: June 30, 2010

Subject to Revocation

Permit Not Transferable

POST CONSPICUOUSLY

Serial: LAP 46480

New York State Department of Health
Certificate of Qualification

CQ Code: STOUR1

Robert L. Stout, Ph.D.
19235 Antioch Road
Bucyrus KS 66013

has qualified to act as a Laboratory Director in the following categories in accordance with Article 5, Title V, Section 573 of the Public Health Law.

Blood Lead
Clinical Chemistry
Diagnostic Immunology
Endocrinology
Forensic Toxicology
Hematology
(excluding bone marrow exam)
Oncology
Sera and Soluble Tumor Markers

STATE OF NEW YORK
DEPARTMENT OF HEALTH

Amended

Effective Date: November 28, 2007
Expiration Date: September 12, 2009

Subject to Revocation
Certificate Not Transferable

POST CONSPICUOUSLY

Serial: CQP36859

New York State Department of Health

PFI: 3813

Clinical Laboratory Permit

CLIA: 24D0665278

MEDTOX Laboratories Inc.
402 West County Road D
Saint Paul MN 55112

Director: Mark G. Catlin, M.D.

Owner: Medtox Scientific Inc

is hereby authorized to perform laboratory procedures at the above location in the following categories in accordance with Article 5, Title V, Section 575 of the Public Health Law. This permit shall become void upon a change in the director, owner or location of the laboratory, and an application for a new permit shall be made to the Department.

Clinical Chemistry
Diagnostic Immunology
Diagnostic Services Serology
Endocrinology
Hematology
Cellular Hematology
Coagulation
Cytohematology Diagnostic
Human Immunodeficiency Virus
Screening Tests Only
Oncology
Soluble Tumor Markers
Toxicology
Blood Lead
Clinical Toxicology-Comprehensive
Erythrocyte Protoporphyrin
Forensic Toxicology-Comprehensive
Trace Elements
Ther. Sub. Mon./Quant. Tox.
Urinalysis
Urine Pregnancy Testing

Renewal

Effective Date: July 1, 2009
Expiration Date: June 30, 2010

Subject to Revocation
Permit Not Transferable

POST CONSPICUOUSLY

Serial: LAP 46060

LETTER OF TRANSMITTAL

Action Key

1 For your records and/or use
2 For price quotation
3 For approval
4 Approved/Reviewed
5 Approved as noted: Re-submission not required
6 Approved as noted: Revise and re-submit
7 Rejected: Re-submit per contract documents

VRH
CONSTRUCTION CORP.
General Contractors & Construction Managers

To	The Port Authority of NY & NJ	Transmittal No.	00094
	2 Gateway Ctr.	Job No.	2030WO12
	14th Floor	Project	PANY/NJ-bt-200.200 WO 12
	Newark, NJ 07102		South Wing Emergency Stair Repairs
Attention	Darlene Coitino		
Phone No.	973-792-4691 Fax		

We are sending you herewith the following: ☒ Drawings ☒ Shop Drawings ☐ Samples ☐ Specifications ☒ Other:

Via: ☒ Attached ☐ Separate Cover Via Mail

Quantity	Drawing/Submittal No.	Description	Action
9	05121-001	Dwg: Title: Welding Quality Plan Desc: Welding Quality Plan	3

ARE	SEC	RE	ARE	OE	OE
	THE PORT AUTHORITY OF NY & NJ PABT ENGINEERING FIELD OFFICE				
FILE					

Remarks:

cc: P. Salvatore; A. Kaprielian/PANYNJ

Signed Anthony Carnabucci

By Anthony J. Carnabuci

Date 11/5/2010

625 Eighth Avenue
2nd Flr, North Building
New York, NY 10018

Phone
212-629-6187
Fax
212-629-9243

LETTER OF TRANSMITTAL

VRH CONSTRUCTION CORP.
General Contractors & Construction Managers

Action Key
1 For your records and/or use
2 For price quotation
3 For approval
4 Approved/Reviewed
5 Approved as noted: Re-submission not required
6 Approved as noted: Revise and re-submit
7 Rejected: Re-submit per contract documents

To	The Port Authority of NY & NJ	Transmittal No.	00094
	2 Gateway Ctr.	Job No.	2030WO12
	14th Floor	Project	PANY/NJ-bt-200.200 WO 12
	Newark, NJ 07102		South Wing Emergency Stair Repairs
Attention	Darlene Coitino		
Phone No.	973-792-4691 Fax		

We are sending you herewith the following: ☐ Drawings ☒ Shop Drawings ☐ Samples ☐ Specifications ☒ Other:

Via: ☒ Attached ☐ Separate Cover Via Mail

Quantity	Drawing/Submittal No.	Description	Action
9	05121-001	Dwg: Title: Welding Quality Plan Desc: Welding Quality Plan	3

ARE	SEC	RE	ARE	OE	OE
	THE PORT AUTHORITY OF NY & NJ PABT ENGINEERING FIELD OFFICE				
FILE					

Remarks:

cc: P. Salvatore; A. Kaprielian/PANYNJ

Signed Anthony Carnabucci

By Anthony J. Carnabuci

Date 11/5/2010

625 Eighth Avenue
2nd Flr, North Building
New York, NY 10018

Phone
212-629-6187
Fax
212-629-9243

LETTER OF TRANSMITTAL

Action Key

1 For your records and/or use
2 For price quotation
3 For approval
4 Approved/Reviewed
5 Approved as noted: Re-submission not required
6 Approved as noted: Revise and re-submit
7 Rejected: Re-submit per contract documents

VRH
CONSTRUCTION CORP.
General Contractors & Construction Managers

To	The Port Authority of NY & NJ	Transmittal No.	00093
	2 Gateway Ctr.	Job No.	2030WO12
	14th Floor	Project	PANY/NJ-bt-200,200.WO 12
	Newark, NJ 07102		South Wing Emergency Stair Repairs
Attention	Darlene Coitino		
Phone No.	973-792-4691 Fax		

We are sending you herewith the followir ☒ Drawings ☒ Shop Drawings ☐ Samples ☐ Specifications ☒ Other:

Via: ☒ Attached ☐ Separate Cover Via Mail

Quantity	Drawing/Submittal No.	Description	Action
9	05121-003	Dwg: Title: Dwg. M-2 Desc: Dwg. M-2	3

ARE	SEC	HE	ARE	OE	OE
	THE PORT AUTHORITY OF NY & NJ PABT ENGINEERING FIELD OFFICE				
FILE					

Remarks:

cc: P. Salvatore; A. Kaprielian/PANYNJ

Signed Anthony Carnabuci

By Anthony J. Carnabuci

Date 11/4/2010

625 Eighth Avenue
2nd Flr, North Building
New York, NY 10018

Phone
212-629-6187
Fax
212-629-9243

LETTER OF TRANSMITTAL

Action Key

1 For your records and/or use
2 For price quotation
3 For approval
4 Approved/Reviewed
5 Approved as noted: Re-submission not required
6 Approved as noted: Revise and re-submit
7 Rejected: Re-submit per contract documents

VRH
CONSTRUCTION CORP.
General Contractors & Construction Managers

To	The Port Authority of NY & NJ	Transmittal No.	00092
	2 Gateway Ctr.	Job No.	2030WO12
	14th Floor	Project	PANY/NJ-bt-200.200 WO 12
	Newark, NJ 07102		South Wing Emergency Stair Repairs
Attention	Darlene Coitino		
Phone No.	973-792-4691 Fax		

We are sending you herewith the following: ☒ Drawings ☒ Shop Drawings ☐ Samples ☐ Specifications ☒ Other:

Via: ☒ Attached ☐ Separate Cover Via Mail

Quantity	Drawing/Submittal No.	Description	Action
9	05121-002	Dwg: Title: Dwg. M-1 Desc: Dwg. M-1	3

ARE	SEC	RE	ARE	OE	OE
	THE PORT AUTHORITY OF NY & NJ PABT ENGINEERING FIELD OFFICE				
FILE					

Remarks:

cc: P. Salvatore; A. Kaprielian/PANYNJ

Signed Anthony Carnabuci

By Anthony J. Carnabuci

Date 11/4/2010

625 Eighth Avenue
2nd Flr, North Building
New York, NY 10018

Phone
212-629-6187
Fax
212-629-9243

LETTER OF TRANSMITTAL

Action Key

1 For your records and/or use
2 For price quotation
3 For approval
4 Approved/Reviewed
5 Approved as noted: Re-submission not required
6 Approved as noted: Revise and re-submit
7 Rejected: Re-submit per contract documents

VRH CONSTRUCTION CORP.
General Contractors & Construction Managers

To	The Port Authority of NY & NJ	Transmittal No.	00090
	2 Gateway Ctr.	Job No.	2030WO12
	14th Floor	Project	PANY/NJ-bt-200,200 WO 12
	Newark, NJ 07102		South Wing Emergency Stair Repairs
Attention	Darlene Coitino		
Phone No.	973-792-4691 Fax		

We are sending you herewith the following: ☐ Drawings ☒ Shop Drawings ☐ Samples ☐ Specifications ☒ Other:

Via: ☒ Attached ☐ Separate Cover Via Mail

Quantity	Drawing/Submittal No.	Description	Action
9	05121-001	Dwg: Title: Welding Quality Plan Desc: Welding Quality Control	3

AUG 27 2010

Remarks:

cc: P. Salvatore; A. Kaprielian/PANYNJ

Signed Anthony Carnabuci for

By Anthony J. Carnabuci

Date 8/20/2010

625 Eighth Avenue
2nd Flr, North Building
New York, NY 10018

Phone
212-629-6187
Fax
212-629-9243

LETTER OF TRANSMITTAL

Action Key

1 For your records and/or use
2 For price quotation
3 For approval
4 Approved/Reviewed
5 Approved as noted: Re-submission not required
6 Approved as noted: Revise and re-submit
7 Rejected: Re-submit per contract documents

VRH CONSTRUCTION CORP.
General Contractors & Construction Managers

To	The Port Authority of NY & NJ	Transmittal No.	00085
	Two Gateway Center	Job No.	2030WO12
	15th Floor	Project	PANY/NJ-bt-200.200 WO 12
	Newark, NJ 07102		South Wing Emergency Stair Repairs
Attention	Ka Kei Chan		
Phone No.	973-792-4629 Fax 973-792-4602		

We are sending you herewith the following: ☐ Drawings ☒ Shop Drawings ☐ Samples ☐ Specifications ☒ Other:

Via: ☒ Attached ☐ Separate Cover Via Mail

Quantity	Drawing/Submittal No.	Description	Action
9	03200-003	Dwg: Title: Concrete Mix Design Desc: Concrete Mix Design	3
9	03200-004	Dwg: Title: Equipment for Concrete Mix Desc: Equipment for Concrete Mix	3

MAY 24 2010

Remarks:

cc: P. Salvatore; A. Kaprielian/PANYNJ

Signed Anthony Carnabuci

By Anthony J. Carnabuci

Date 5/20/2010

625 Eighth Avenue
2nd Flr, North Building
New York, NY 10018

Phone
212-629-6187
Fax
212-629-9243

LETTER OF TRANSMITTAL

VRH CONSTRUCTION CORP.
General Contractors & Construction Managers

Action Key
1 For your records and/or use
2 For price quotation
3 For approval
4 Approved/Reviewed
5 Approved as noted: Re-submission not required
6 Approved as noted: Revise and re-submit
7 Rejected: Re-submit per contract documents

To	The Port Authority of NY & NJ	Transmittal No.	00086
	Two Gateway Center	Job No.	2030WO12
	15th Floor	Project	PANY/NJ-bt-200.200 WO 12
	Newark, NJ 07102		South Wing Emergency Stair Repairs
Attention	Ka Kei Chan		
Phone No.	973-792-4629 Fax 973-792-4602		

We are sending you herewith the following: ☐ Drawings ☒ Shop Drawings ☐ Samples ☐ Specifications ☒ Other:

Via: ☒ Attached ☐ Separate Cover Via Mail

Quantity	Drawing/Submittal No.	Description	Action
9	03200-005	Dwg: Title: 10-61 Rapid Mortar Desc: 10-61 Rapid Mortar	3

MAY 26 2010

Remarks:

cc: P. Salvatore; A. Kaprielian/PANYNJ

Signed Anthony Cannabuci Jr.

By Anthony J. Cannabuci

Date 5/24/2010

625 Eighth Avenue
2nd Flr, North Building
New York, NY 10018

Phone
212-629-6187
Fax
212-629-9243

LETTER OF TRANSMITTAL

Action Key

1 For your records and/or use
2 For price quotation
3 For approval
4 Approved/Reviewed
5 Approved as noted: Re-submission not required
6 Approved as noted: Revise and re-submit
7 Rejected: Re-submit per contract documents

VRH
CONSTRUCTION CORP.
General Contractors & Construction Managers

To	The Port Authority of NY & NJ	Transmittal No.	00081
	Two Gateway Center	Job No.	2030WO12
	15th Floor	Project	PANY/NJ-St-200.200 WO 12
	Newark, NJ 07102		South Wing Emergency Stair Repairs
Attention	Ka Kei Chan		
Phone No.	973-792-4629 Fax 973-792-4602		

We are sending you herewith the followir ☒ Drawings ☒ Shop Drawings ☐ Samples ☐ Specifications ☒ Other:

Via: ☒ Attached ☐ Separate Cover Via Mail

Quantity	Drawing/Submittal No.	Description	Action
9	02094-002	Dwg: Title: Lead Abatement Package Desc: Lead Abatement Package	3

APR 19 2010

Remarks:

cc: P. Salvatore; A. Kaprielian/PANYNJ

Signed Anthony Carnabuci

By Anthony J. Carnabuci

Date 4/16/2010

625 Eighth Avenue
2nd Flr, North Building
New York, NY 10018

Phone
212-629-6187
Fax
212-629-9243

LETTER OF TRANSMITTAL

VRH
CONSTRUCTION CORP.
General Contractors & Construction Managers

Action Key
1 For your records and/or use
2 For price quotation
3 For approval
4 Approved/Reviewed
5 Approved as noted: Re-submission not required
6 Approved as noted: Revise and re-submit
7 Rejected: Re-submit per contract documents

To	The Port Authority of NY & NJ	Transmittal No.	00080
	Two Gateway Center	Job No.	2030WO12
	15th Floor	Project	PANY/NJ-bt-200.200 WO 12
	Newark, NJ 07102		South Wing Emergency Stair Repairs
Attention	Ka Kei Chan		
Phone No.	973-792-4629 Fax 973-792-4602		

We are sending you herewith the following: ☐ Drawings ☒ Shop Drawings ☐ Samples ☐ Specifications ☒ Other:

Via: ☒ Attached ☐ Separate Cover Via Mail

Quantity	Drawing/Submittal No.	Description	Action
9	16782-006	Dwg: Title: CCTV Conduit Run & Seismic Detail Desc: CCTV Conduit Run & Seismic Detail	1

APR 16 2010

Remarks:

cc: P. Salvatore; A. Kaprielian/PANYNJ

Signed Anthony Carnabuci

By Anthony J. Carnabuci

Date 4/14/2010

625 Eighth Avenue
2nd Flr, North Building
New York, NY 10018

Phone
212-629-6187
Fax
212-629-9243

LETTER OF TRANSMITTAL

Action Key

1 For your records and/or use
2 For price quotation
3 For approval
4 Approved/Reviewed
5 Approved as noted: Re-submission not required
6 Approved as noted: Revise and re-submit
7 Rejected: Re-submit per contract documents

VRH
CONSTRUCTION CORP.
General Contractors & Construction Managers

To	The Port Authority of NY & NJ	Transmittal No.	00078
	Two Gateway Center	Job No.	2030WO12
	15th Floor	Project	PANY/NJ-bt-200.200 WO 12
	Newark, NJ 07102		South Wing Emergency Stair Repairs
Attention	Ka Kei Chan		
Phone No.	973-792-4629 Fax 973-792-4602		

We are sending you herewith the followir ☒ Drawings ☒ Shop Drawings ☐ Samples ☐ Specifications ☒ Other:

Via: ☒ Attached ☐ Separate Cover Via Mail

Quantity	Drawing/Submittal No.	Description	Action
3	03303-001	Dwg: Title: Sikacrete 211 Desc: Sikacrete 211	3.

APR 08 2010

Remarks:

cc: P. Salvatore; A. Kaprielian/PANYNJ

Signed Anthony Carnabuci

By Anthony J. Carnabuci

Date 4/7/2010

625 Eighth Avenue
2nd Flr, North Building
New York, NY 10018

Phone
212-629-6187
Fax
212-629-9243

LETTER OF TRANSMITTAL

VRH CONSTRUCTION CORP.
General Contractors & Construction Managers

Action Key
1 For your records and/or use
2 For price quotation
3 For approval
4 Approved/Reviewed
5 Approved as noted: Re-submission not required
6 Approved as noted: Revise and re-submit
7 Rejected: Re-submit per contract documents

To	The Port Authority of NY & NJ	Transmittal No.	00072
	Two Gateway Center	Job No.	2030WO12
	15th Floor	Project	PANY/NJ-bt-200200 WO 12
	Newark, NJ 07102		South Wing Emergency Stair Repairs
Attention	Ka Kei Chan		
Phone No.	973-792-4629 Fax 973-792-4602		

We are sending you herewith the followir ☒ Drawings ☒ Shop Drawings ☐ Samples ☐ Specifications ☒ Other:

Via: ☒ Attached ☐ Separate Cover Via Mail

Quantity	Drawing/Submittal No.	Description	Action
9	16782-005	Dwg: Title: RG6/U CCTV Coaxial Cable + Power Desc: RG6/U CCTV Coaxial Cable + Power	3

Remarks:

cc: P. Salvatore; A. Kaprielian/PANYNJ

Signed Anthony Carnabuci

By Anthony J. Carnabuci

Date 2/1/2010

625 Eighth Avenue
2nd Flr, North Building
New York, NY 10018

Phone
212-629-6187
Fax
212-629-9243

LETTER OF TRANSMITTAL

Action Key
1 For your records and/or use
2 For price quotation
3 For approval
4 Approved/Reviewed
5 Approved as noted: Re-submission not required
6 Approved as noted: Revise and re-submit
7 Rejected: Re-submit per contract documents

VRH CONSTRUCTION CORP.
General Contractors & Construction Managers

To	The Port Authority of NY & NJ	Transmittal No.	00073
	Two Gateway Center	Job No.	2030WO12
	15th Floor	Project	PANY/NJ-bt-200.200 WO 12
	Newark, NJ 07102		South Wing Emergency Stair Repairs
Attention	Ka Kei Chan		
Phone No.	973-792-4629 Fax 973-792-4602		

We are sending you herewith the followir ☒ Drawings ☒ Shop Drawings ☐ Samples ☐ Specifications ☒ Other:

Via: ☒ Attached ☐ Separate Cover Via Mail

Quantity	Drawing/Submittal No.	Description	Action
9	09910-010	Dwg: Title: Kemperol EP Primer for Masonry Desc: Kemperol EP Primer for Masonry	3
9	09910-011	Dwg: Title: Kemperol Fleece 165 Desc: Kemperol Fleece 165	3
9	09910-012	Dwg: Title: Kemperol V2100-m-for low temp. Ins. Desc: Kemperol V2100-m-for low temp. Ins.	3
9	09910-009	Dwg: Title: Kemperol D Primer for Metal Desc: Kemperol D Primer for Metal	3
9	09910-008	Dwg: Title: Kemperol 2K PUR Resin-odorless Desc: Kemperol 2K PUR Resin-odorless	3

FEB 02 2010

Remarks:

cc: P. Salvatore; A. Kaprielian/PANYNJ

Signed Anthony Carnabuci

By Anthony J. Carnabuci

Date 2/1/2010

625 Eighth Avenue
2nd Flr, North Building
New York, NY 10018

Phone
212-629-6187
Fax
212-629-9243

LETTER OF TRANSMITTAL

Action Key

1 For your records and/or use
2 For price quotation
3 For approval
4 Approved/Reviewed
5 Approved as noted: Re-submission not required
6 Approved as noted: Revise and re-submit
7 Rejected: Re-submit per contract documents

VRH
CONSTRUCTION CORP.
General Contractors & Construction Managers

To	The Port Authority of NY & NJ	Transmittal No.	00071
	Two Gateway Center	Job No.	2030WO12
	15th Floor	Project	PANY/NJ-bt-200.200 WO 12
	Newark, NJ 07102		South Wing Emergency Stair Repairs
Attention	Ka Kei Chan		
Phone No.	973-792-4629 Fax 973-792-4602		

We are sending you herewith the followir ☐ Drawings ☒ Shop Drawings ☐ Samples ☐ Specifications ☒ Other:

Via: ☒ Attached ☐ Separate Cover Via Mail

Quantity	Drawing/Submittal No.	Description	Action
0	08715-001	Dwg: Title: Finish Hardwr & Hollow Metal Sched. Desc: Finish Hardwr & Hollow Metal Sched.	3

7

JAN 13 2010

Remarks:

cc: P. Salvatore; A. Kaprielian/PANYNJ

Signed Anthony Carnabuci Jr.

By Anthony J. Carnabuci

Date 1/13/2010

625 Eighth Avenue
2nd Flr, North Building
New York, NY 10018

Phone
212-629-6187
Fax
212-629-9243

LETTER OF TRANSMITTAL

Action Key
1 For your records and/or use
2 For price quotation
3 For approval
4 Approved/Reviewed
5 Approved as noted: Re-submission not required
6 Approved as noted: Revise and re-submit
7 Rejected: Re-submit per contract documents

VRH CONSTRUCTION CORP
General Contractors & Construction Managers

To	The Port Authority of NY & NJ	Transmittal No.	00064
	Two Gateway Center	Job No.	2030WO12
	15th Floor	Project	PANY/NJ-bt-200.200 WO 12
	Newark, NJ 07102		South Wing Emergency Stair Repairs
Attention	Ka Kei Chan		
Phone No.	973-792-4629 Fax 973-792-4602		

We are sending you herewith the followin ☐ Drawings ☒ Shop Drawings ☐ Samples ☐ Specifications ☒ Other:

Via: ☒ Attached ☐ Separate Cover Via Mail

Quantity	Drawing/Submittal No.	Description	Action
9	04100-002A	Dwg: Title: Geo.Schofield Test Report 107 Mason Desc: Geo.Schofield Test Report 107 Mason	3

Remarks:

cc: P. Salvatore; A. Kaprielian/PANYNJ

Signed Anthony Carnabuci JM

By Anthony J. Carnabuci

Date 11/12/2009

625 Eighth Avenue
2nd Flr, North Building
New York, NY 10018

Phone
212-629-6187
Fax
212-629-9243

LETTER OF TRANSMITTAL

VRH CONSTRUCTION CORP.
General Contractors & Construction Managers

Action Key
1 For your records and/or use
2 For price quotation
3 For approval
4 Approved/Reviewed
5 Approved as noted: Re-submission not required
6 Approved as noted: Revise and re-submit
7 Rejected: Re-submit per contract documents

To	The Port Authority of NY & NJ	Transmittal No.	00067
	Two Gateway Center	Job No.	2030WO12
	15th Floor	Project	PANY/NJ-bt-200.200 WO 12
	Newark, NJ 07102		South Wing Emergency Stair Repairs
Attention	Ka Kei Chan		
Phone No.	973-792-4629 Fax 973-792-4602		

We are sending you herewith the following: ☐ Drawings ☒ Shop Drawings ☐ Samples ☐ Specifications ☒ Other:

Via: ☒ Attached ☐ Separate Cover Via Mail

Quantity	Drawing/Submittal No.	Description	Action
9	02551-003	Dwg: Title: PA I-5A Mix Design from Newark Desc: PA I-5A Mix Design from Newark	3

Remarks:

cc: P. Salvatore; A. Kaprielian/PANYNJ

Signed Anthony Carnabuci

By Anthony J. Carnabuci

Date 11/24/2009

625 Eighth Avenue
2nd Flr, North Building
New York, NY 10018

Phone
212-629-6187
Fax
212-629-9243

LETTER OF TRANSMITTAL

Action Key
1 For your records and/or use
2 For price quotation
3 For approval
4 Approved/Reviewed
5 Approved as noted: Re-submission not required
6 Approved as noted: Revise and re-submit
7 Rejected: Re-submit per contract documents

VRH CONSTRUCTION CORP.
General Contractors & Construction Managers

To	The Port Authority of NY & NJ	Transmittal No.	00066
	Two Gateway Center	Job No.	2030WO12
	15th Floor	Project	PANY/NJ-bt-200\200 WO 12
	Newark, NJ 07102		South Wing Emergency Stair Repairs
Attention	Ka Kei Chan		
Phone No.	973-792-4629 Fax 973-792-4602		

We are sending you herewith the following: ☐ Drawings ☒ Shop Drawings ☐ Samples ☐ Specifications ☒ Other:

Via: ☒ Attached ☐ Separate Cover Via Mail

Quantity	Drawing/Submittal No.	Description	Action
9	04212-006	Dwg: Title: Yankee Hill Medium Iron Spot Velour Desc: Yankee Hill Medium Iron Spot Velour Norman Brick	3

Remarks:

cc: P. Salvatore; A. Kaprielian/PANYNJ

Signed Anthony Carnabucci Jr.

By Anthony J. Carnabuci

Date 11/20/2009

625 Eighth Avenue
2nd Flr, North Building
New York, NY 10018

Phone
212-629-6187
Fax
212-629-9243

LETTER OF TRANSMITTAL

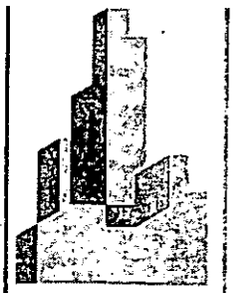

VRH
CONSTRUCTION CORP.
General Contractors & Construction Managers

Action Key
1 For your records and/or use
2 For price quotation
3 For approval
4 Approved/Reviewed
5 Approved as noted: Re-submission not required
6 Approved as noted: Revise and re-submit
7 Rejected: Re-submit per contract documents

To	The Port Authority of NY & NJ	Transmittal No.	00060
	Two Gateway Center	Job No.	2030WO12
	15th Floor	Project	PANY/NJ-bt-200200 WO 12
	Newark, NJ 07102		South Wing Emergency Stair Repairs
Attention	Ka Kei Chan		
Phone No.	973-792-4629 Fax 973-792-4602		

We are sending you herewith the following: ☐ Drawings ☒ Shop Drawings ☐ Samples ☐ Specifications ☒ Other:

Via: ☒ Attached ☐ Separate Cover Via Mail

Quantity	Drawing/Submittal No.	Description	Action
9	04100-003	Dwg: Title: SGS Mortar Colored Chart Desc: SGS Mortar Colored Chart	3

Remarks:

cc: P. Salvatore; A. Kaprielian/PANYNJ

Signed Anthony Carnabuci

By Anthony J. Carnabuci

Date 11/4/2009

625 Eighth Avenue
2nd Flr, North Building
New York, NY 10018

Phone
212-629-6187
Fax
212-629-9243

LETTER OF TRANSMITTAL

VRH CONSTRUCTION CORP.
General Contractors & Construction Managers

Action Key
1 For your records and/or use
2 For price quotation
3 For approval
4 Approved/Reviewed
5 Approved as noted: Re-submission not required
6 Approved as noted: Revise and re-submit
7 Rejected: Re-submit per contract documents

To	Total Electrical Constr. Co., Inc.	Transmittal No.	00058
	230 Green Street	Job No.	2030WO12
		Project	PANY/NJ-bt-200.200 WO 12
	Greenpoint, NY 11222		South Wing Emergency Stair Repairs
Attention	Peter Lipari		
Phone No.	718-361-8402 Fax 718-361-8405		

We are sending you herewith the followir ☒ Drawings ☒ Shop Drawings ☐ Samples ☐ Specifications ☒ Other:

Via: ☒ Attached ☐ Separate Cover Via Mail

Quantity	Drawing/Submittal No.	Description	Action
9	16110-003	Dwg: Title: Flexible Metal Conduit Desc: Flexible Metal Conduit	7

Remarks:

cc: P. Salvatore; A. Kaprielian/PANYNJ

Signed

By Anthony J. Carnabuci

Date 10/20/2009

625 Eighth Avenue
2nd Flr, North Building
New York, NY 10018

Phone
212-629-6187
Fax
212-629-9243

LETTER OF TRANSMITTAL

VRH CONSTRUCTION CORP.
General Contractors & Construction Managers

Action Key
1 For your records and/or use
2 For price quotation
3 For approval
4 Approved/Reviewed
5 Approved as noted: Re-submission not required
6 Approved as noted: Revise and re-submit
7 Rejected: Re-submit per contract documents

To	The Port Authority of NY & NJ	Transmittal No.	00059
	Two Gateway Center	Job No.	2030WO12
	15th Floor	Project	PANYNJ-bt-200.200 WO 12
	Newark, NJ 07102		South Wing Emergency Stair Repairs
Attention	Ka Kei Chan		
Phone No.	973-792-4629 Fax 973-792-4602		

We are sending you herewith the following: ☐ Drawings ☒ Shop Drawings ☐ Samples ☐ Specifications ☒ Other:

Via: ☒ Attached ☐ Separate Cover Via Mail

Quantity	Drawing/Submittal No.	Description	Action
9	02551-003	Dwg: Title: I-5A Design Mix from Grace Desc: I-5A Design Mix from Grace	3

Remarks:

cc: P. Salvatore; A. Kaprielian/PANYNJ

Signed Anthony Carnabuci BA

By Anthony J. Carnabuci

Date 10/22/2009

625 Eighth Avenue
2nd Flr, North Building
New York, NY 10018

Phone
212-629-6187
Fax
212-629-9243

LETTER OF TRANSMITTAL

Action Key

1 For your records and/or use
2 For price quotation
3 For approval
4 Approved/Reviewed
5 Approved as noted: Re-submission not required
6 Approved as noted: Revise and re-submit
7 Rejected: Re-submit per contract documents

VRH CONSTRUCTION CORP.
General Contractors & Construction Managers

To	The Port Authority of NY & NJ	Transmittal No.	00056
	Two Gateway Center	Job No.	2030WO12
	15th Floor	Project	PANY/NJ-bt-200.200 WO 12
	Newark, NJ 07102		South Wing Emergency Stair Repairs
Attention	Ka Kei Chan		
Phone No.	973-792-4629 Fax 973-792-4602		

We are sending you herewith the followir ☒ Drawings ☒ Shop Drawings ☐ Samples ☐ Specifications ☒ Other:

Via: ☒ Attached ☐ Separate Cover Via Mail

Quantity	Drawing/Submittal No.	Description	Action
9	04100-002	Dwg: Title: Mason Sand Desc: Mason Sand	3

Remarks:

cc: P. Salvatore; A. Kaprielian/PANYNJ

Signed Anthony J. Carnabuci

By Anthony J. Carnabuci

Date 10/19/2009

625 Eighth Avenue
2nd Flr, North Building
New York, NY 10018

Phone
212-629-6187
Fax
212-629-9243

LETTER OF TRANSMITTAL

Action Key

1 For your records and/or use
2 For price quotation
3 For approval
4 Approved/Reviewed
5 Approved as noted: Re-submission not required
6 Approved as noted: Revise and re-submit
7 Rejected: Re-submit per contract documents

VRH
CONSTRUCTION CORP.
General Contractors & Construction Managers

To	The Port Authority of NY & NJ	Transmittal No.	00055
	Two Gateway Center	Job No.	2030WO12
	15th Floor	Project	PANY/NJ-bt-200.200 WO 12
	Newark, NJ 07102		South Wing Emergency Stair Repairs
Attention	Ka Kei Chan		
Phone No.	973-792-4629 Fax 973-792-4602		

We are sending you herewith the followir ☒ Drawings ☒ Shop Drawings ☐ Samples ☐ Specifications ☒ Other:

Via: ☒ Attached ☐ Separate Cover Via Mail

Quantity	Drawing/Submittal No.	Description	Action
9	04212-005	Dwg: Title: Endicott Test Report Desc: Endicott Test Report	3
9	04100-001	Dwg: Title: Lafarge Eaglebond Portland & Lime Desc: Lafarge Eaglebond Portland & Lime	3

Remarks:

cc: P. Salvatore; A. Kaprielian/PANYNJ

Signed [signature]

By Anthony J. Carnabuci

Date 10/19/2009

625 Eighth Avenue
2nd Flr, North Building
New York, NY 10018

Phone
212-629-6187
Fax
212-629-9243

LETTER OF TRANSMITTAL

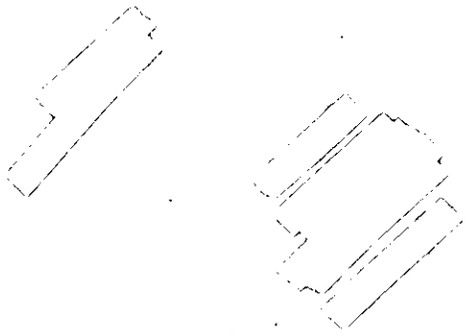

VRH
CONSTRUCTION CORP.
General Contractors & Construction Managers

Action Key
1 For your records and/or use
2 For price quotation
3 For approval
4 Approved/Reviewed
5 Approved as noted: Re-submission not required
6 Approved as noted: Revise and re-submit
7 Rejected: Re-submit per contract documents

To	The Port Authority of NY & NJ	Transmittal No.	00051
	Two Gateway Center	Job No.	2030WO12
	15th Floor	Project	PANY/NJ-bt-200.200 WO 12
	Newark, NJ 07102		South Wing Emergency Stair Repairs
Attention	Ka Kei Chan		
Phone No.	973-792-4629 Fax 973-792-4602		

We are sending you herewith the followir ☐ Drawings ☒ Shop Drawings ☐ Samples ☐ Specifications ☒ Other:

Via: ☒ Attached ☐ Separate Cover Via Mail

Quantity	Drawing/Submittal No.	Description	Action
9	16190-002	Dwg: Title: Pipe Clamps Desc: Pipe Clamps	3
9	16190-003	Dwg: Title: Spring Nuts Desc: Spring Nuts	3
9	16190-004	Dwg: Title: Machine Screws Desc: Machine Screws	3
9	16190-005	Dwg: Title: Sheet Metal Screws Desc: Sheet Metal Screws	3
9	16190-006	Dwg: Title: Stud Bolt Anchors Desc: Stud Bolt Anchors	3
9	16190-007	Dwg: Title: Toggle Bolts Desc: Toggle Bolts	3
9	16190-008	Dwg: Title: Double Expansion Anchors Desc: Double Expansion Anchors	3
9	16190-009	Dwg: Title: Drop-In Anchors Desc: Drop-In Anchors	3
9	16190-010	Dwg: Title: Threaded Rod Desc: Threaded Rod	3
9	16190-001	Dwg: Title: Channel Desc: Channel	3

Remarks:

cc: P. Salvatore; A. Kaprielian/PANYNJ

Signed

By Anthony J. Carnabuci

Date 10/15/2009

625 Eighth Avenue
2nd Flr, North Building
New York, NY 10018

Phone
212-629-6187
Fax
212-629-9243

LETTER OF TRANSMITTAL

VRH
CONSTRUCTION CORP.
General Contractors & Construction Managers

Action Key
1 For your records and/or use
2 For price quotation
3 For approval
4 Approved/Reviewed
5 Approved as noted: Re-submission not required
6 Approved as noted: Revise and re-submit
7 Rejected: Re-submit per contract documents

To	The Port Authority of NY & NJ	Transmittal No.	00050
	Two Gateway Center	Job No.	2030WO12
	15th Floor	Project	PANY/NJ-bt-200.200 WO 12
	Newark, NJ 07102		South Wing Emergency Stair Repairs
Attention	Ka Kei Chan		
Phone No.	973-792-4629 Fax 973-792-4602		

We are sending you herewith the followir ☒ Drawings ☒ Shop Drawings ☐ Samples ☐ Specifications ☒ Other:

Via: ☒ Attached ☐ Separate Cover Via Mail

Quantity	Drawing/Submittal No.	Description	Action
9	16110-003	Dwg: Title: Flexible Metal Conduit Desc: Flexible Metal Conduit	3

Remarks:

cc: P. Salvatore; A. Kaprielian/PANYNJ

Signed Anthony J. Carnabuci P.E.

By Anthony J. Carnabuci

Date 10/7/2009

625 Eighth Avenue
2nd Flr, North Building
New York, NY 10018

Phone
212-629-6187
Fax
212-629-9243

LETTER OF TRANSMITTAL

VRH
CONSTRUCTION CORP.
General Contractors & Construction Managers

Action Key
1 For your records and/or use
2 For price quotation
3 For approval
4 Approved/Reviewed
5 Approved as noted: Re-submission not required
6 Approved as noted: Revise and re-submit
7 Rejected: Re-submit per contract documents

To	The Port Authority of NY & NJ	Transmittal No.	00049
	Two Gateway Center	Job No.	2030WO12
	15th Floor	Project	PANY/NJ-bt-200.200 WO 12
	Newark, NJ 07102		South Wing Emergency Stair Repairs
Attention	Ka Kei Chan		
Phone No.	973-792-4629 Fax 973-792-4602		

We are sending you herewith the following: ☒ Drawings ☒ Shop Drawings ☐ Samples ☐ Specifications ☒ Other:

Via: ☒ Attached ☐ Separate Cover Via Mail

Quantity	Drawing/Submittal No.	Description	Action
9	04212-004	Dwg: Title: Brick Masonry Product Data Sheet Desc: Brick Masonry Product Data Ssheet	3

Remarks:

cc: P. Salvatore; A. Kaprielian/PANYNJ

Signed Anthony J. Carnabuci

By Anthony J. Carnabuci

Date 10/6/2009

625 Eighth Avenue
2nd Flr, North Building
New York, NY 10018

Phone
212-629-6187
Fax
212-629-9243

LETTER OF TRANSMITTAL

VRH CONSTRUCTION CORP
General Contractors & Construction Managers

Action Key
1 For your records and/or use
2 For price quotation
3 For approval
4 Approved/Reviewed
5 Approved as noted: Re-submission not required
6 Approved as noted: Revise and re-submit
7 Rejected: Re-submit per contract documents

To	The Port Authority of NY & NJ	Transmittal No.	00049
	Two Gateway Center	Job No.	2030WO12
	15th Floor	Project	PANY/NJ-bt-200.200 WO 12
	Newark, NJ 07102		South Wing Emergency Stair Repairs
Attention	Ka Kei Chan		
Phone No.	973-792-4629 Fax 973-792-4602		

We are sending you herewith the followir ☐ Drawings ☒ Shop Drawings ☐ Samples ☐ Specifications ☒ Other:

Via: ☒ Attached ☐ Separate Cover Via Mail

Quantity	Drawing/Submittal No.	Description	Action
9	04212-004	Dwg: Title: Brick Masonry Product Data Sheet Desc: Brick Masonry Product Data Ssheet	3

Remarks:

cc: P. Salvatore; A. Kaprielian/PANYNJ

Signed

By Anthony J. Carnabuci

Date 10/6/2009

625 Eighth Avenue
2nd Flr, North Building
New York, NY 10018

Phone
212-629-6187
Fax
212-629-9243

LETTER OF TRANSMITTAL

Action Key
1 For your records and/or use
2 For price quotation
3 For approval
4 Approved/Reviewed
5 Approved as noted: Re-submission not required
6 Approved as noted: Revise and re-submit
7 Rejected: Re-submit per contract documents

VRH CONSTRUCTION CORP
General Contractors & Construction Managers

To	The Port Authority of NY & NJ	Transmittal No.	00034
	Two Gateway Center	Job No.	2030WO12
	15th Floor	Project	PANY/NJ-bt-200.200 WO 12
	Newark, NJ 07102		South Wing Emergency Stair Repairs
Attention	Ka Kei Chan		
Phone No.	973-792-4629 Fax 973-792-4602		

We are sending you herewith the followir ☐ Drawings ☒ Shop Drawings ☐ Samples ☐ Specifications ☒ Other:

Via: ☒ Attached ☐ Separate Cover Via Mail

Quantity	Drawing/Submittal No.	Description	Action
8	09910-007	Dwg: Title: Quality Assurance & Quality Control Desc: Quality Assurance & Quality Control Plan	3

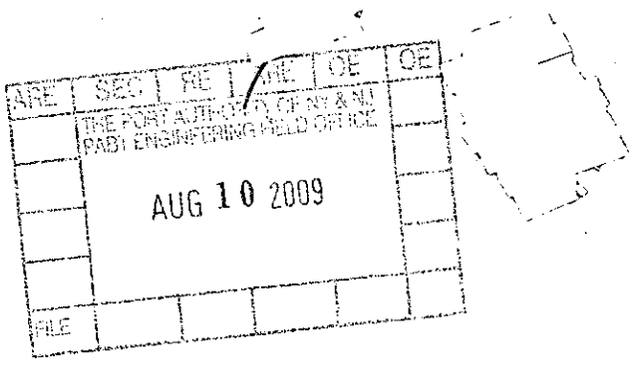

Remarks:

cc: P. Salvatore; A. Kaprielian/PANYNJ

Signed Anthony Carnabuci Jr.

By Anthony J. Carnabuci

Date 8/7/2009

625 Eighth Avenue
2nd Flr, North Building
New York, NY 10018

Phone
212-629-6187
Fax
212-629-9243

LETTER OF TRANSMITTAL

VRH CONSTRUCTION CORP.
General Contractors & Construction Managers

Action Key
1 For your records and/or use
2 For price quotation
3 For approval
4 Approved/Reviewed
5 Approved as noted: Re-submission not required
6 Approved as noted: Revise and re-submit
7 Rejected: Re-submit per contract documents

To	The Port Authority of NY & NJ	Transmittal No.	00040
	Two Gateway Center	Job No.	2030WO12
	15th Floor	Project	PANY/NJ-bt-200.200 WO 12
	Newark, NJ 07102		South Wing Emergency Stair Repairs
Attention	Ka Kei Chan		
Phone No.	973-792-4629 Fax 973-792-4602		

We are sending you herewith the followin ☒ Drawings ☒ Shop Drawings ☐ Samples ☐ Specifications ☒ Other:

Via: ☒ Attached ☐ Separate Cover Via Mail

Quantity	Drawing/Submittal No.	Description	Action
9	09910-007	Dwg: Title: Quality Assurance & Quality Control Desc: Quality Assurance & Quality Control	3

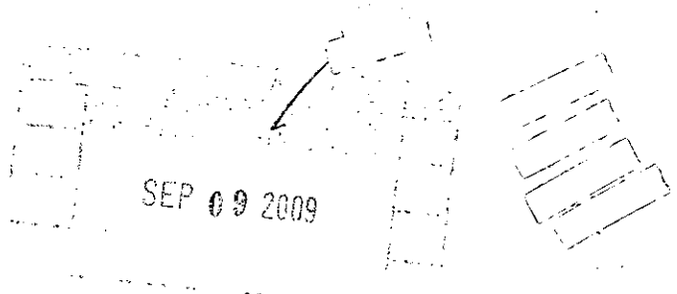

Remarks:

cc: P. Salvatore; A. Kaprielian/PANYNJ

Signed Anthony Carnabuci for

By Anthony J. Carnabuci

Date 9/3/2009

625 Eighth Avenue
2nd Flr, North Building
New York, NY 10018

Phone
212-629-6187
Fax
212-629-9243

LETTER OF TRANSMITTAL

Action Key
1 For your records and/or use
2 For price quotation
3 For approval
4 Approved/Reviewed
5 Approved as noted: Re-submission not required
6 Approved as noted: Revise and re-submit
7 Rejected: Re-submit per contract documents

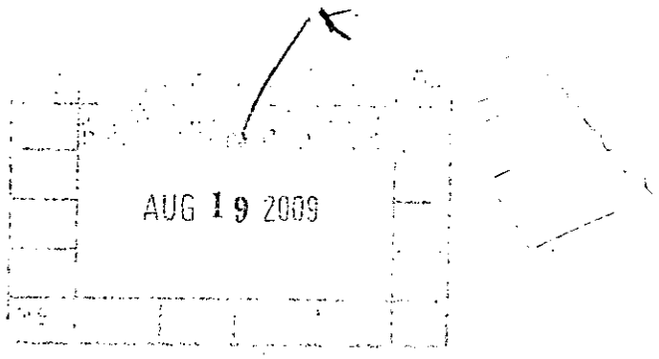

VRH
CONSTRUCTION CORP.
General Contractors & Construction Managers

To	The Port Authority of NY & NJ	Transmittal No.	00035
	Two Gateway Center	Job No.	2030WO12
	15th Floor	Project	PANY/NJ-bt-200.200 WO 12
	Newark, NJ 07102		South Wing Emergency Stair Repairs
Attention	Ka Kei Chan		
Phone No.	973-792-4629 Fax 973-792-4602		

We are sending you herewith the following: ☐ Drawings ☒ Shop Drawings ☐ Samples ☐ Specifications ☒ Other:

Via: ☒ Attached ☐ Separate Cover Via Mail

Quantity	Drawing/Submittal No.	Description	Action
9	07920-001	Dwg: Title: Sikaflex-1a Desc: Dow Corning 795 Silicone Bldg. Sealant	3

Remarks:

cc: P. Salvatore; A. Kaprielian/PANYNJ

Signed Anthony Carnabuci RA

By Anthony J. Carnabuci

Date 8/12/2009

625 Eighth Avenue
2nd Flr, North Building
New York, NY 10018

Phone
212-629-6187
Fax
212-629-9243

LETTER OF TRANSMITTAL

AUG 06 2009

Action Key
1 For your records and/or use
2 For price quotation
3 For approval
4 Approved/Reviewed
5 Approved as noted: Re-submission not required
6 Approved as noted: Revise and re-submit
7 Rejected: Re-submit per contract documents

VRH CONSTRUCTION CORP.
General Contractors & Construction Managers

To	The Port Authority of NY & NJ	Transmittal No.	00030
	Two Gateway Center	Job No.	2030WO12
	15th Floor	Project	PANY/NJ-bt-200.200 WO 12
	Newark, NJ 07102		South Wing Emergency Stair Repairs
Attention	Ka Kei Chan		
Phone No.	973-792-4629 Fax 973-792-4602		

We are sending you herewith the followin ☐ Drawings ☒ Shop Drawings ☐ Samples ☐ Specifications ☒ Other:

Via: ☒ Attached ☐ Separate Cover Via Mail

Quantity	Drawing/Submittal No.	Description	Action
9	16782-002	Dwg: Title: Camera Power Supply Desc: Camera Power Supply	3
9	16782-003	Dwg: Title: Video Encoder Desc: Video Encoder	3
9	16782-004	Dwg: Title: Encoder Power Supply Desc: Encoder Power Supply	3
9	16782-001	Dwg: Title: Fixed Mount Dome, Camera & Lens Desc: Fixed Mount Dome, Camera & Lens	3

Remarks:

cc: P. Salvatore; A. Kaprielian/PANYNJ

Signed Anthony Carnabuci

By Anthony J. Carnabuci

Date 8/4/2009

625 Eighth Avenue
2nd Flr, North Building
New York, NY 10018

Phone
212-629-6187
Fax
212-629-9243

LETTER OF TRANSMITTAL

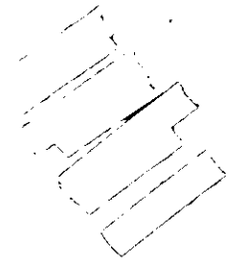

JUN 30 2009

Action Key
1 For your records and/or use
2 For price quotation
3 For approval
4 Approved/Reviewed
5 Approved as noted: Re-submission not required
6 Approved as noted: Revise and re-submit
7 Rejected: Re-submit per contract documents

VRH CONSTRUCTION CORP.
General Contractors & Construction Managers

To	The Port Authority of NY & NJ	Transmittal No.	00015
	Two Gateway Center	Job No.	2030WO12
	15th Floor	Project	PANY/NJ-bt-200.200 WO 12
	Newark, NJ 07102		South Wing Emergency Stair Repairs
Attention	Ka Kei Chan		
Phone No.	973-792-4629 Fax 973-792-4602		

We are sending you herewith the following: ☒ Drawings ☒ Shop Drawings ☐ Samples ☐ Specifications ☒ Other:

Via: ☒ Attached ☐ Separate Cover Via Mail

Quantity	Drawing/Submittal No.	Description	Action
8	09910-001	Dwg: Title: Loxon Acrylic Primer Desc: Loxon Acrylic Primer	3
8	09910-003	Dwg: Title: Heavy Duty Block Filler Desc: Heavy Duty Block Filler	3
8	09910-004	Dwg: Title: Zinc Clad IV Desc: Zinc Clad IV	3
8	09910-005	Dwg: Title: Acrolon 218 HS Desc: Acrolon 218 HS	3
8	09910-006	Dwg: Title: Epoxy Mastic D.O.T. Desc: Epoxy Mastic D.O.T.	3
8	09910-002	Dwg: Title: DTM Acrylic Coating Desc: DTM Acrylic Coating	3

Remarks:

cc: P. Salvatore; A. Kaprielian/PANYNJ

Signed

By Anthony J. Carnabuci

Date 6/29/2009

625 Eighth Avenue
2nd Flr, North Building
New York, NY 10018

Phone
212-629-6187
Fax
212-629-9243

LETTER OF TRANSMITTAL

JUN 30 2009

VRH CONSTRUCTION CORP.
General Contractors & Construction Managers

Action Key
1 For your records and/or use
2 For price quotation
3 For approval
4 Approved/Reviewed
5 Approved as noted: Re-submission not required
6 Approved as noted: Revise and re-submit
7 Rejected: Re-submit per contract documents

To	The Port Authority of NY & NJ	Transmittal No.	00016
	Two Gateway Center	Job No.	2030WO12
	15th Floor	Project	PANY/NJ-bt-200.200 WO 12
	Newark, NJ 07102		South Wing Emergency Stair Repairs
Attention	Ka Kei Chan		
Phone No.	973-792-4629 Fax 973-792-4602		

We are sending you herewith the followin ☐ Drawings ☒ Shop Drawings ☐ Samples ☐ Specifications ☒ Other:

Via: ☒ Attached ☐ Separate Cover Via Mail

Quantity	Drawing/Submittal No.	Description	Action
8	02094-001	Dwg: Title: DUMOND Peel Away 1 Desc: DUMOND Peel Away 1	3

Remarks:

cc: P. Salvatore; A. Kaprielian/PANYNJ

Signed Anthony Carnabuci

By Anthony J. Carnabuci

Date 6/29/2009

625 Eighth Avenue
2nd Flr, North Building
New York, NY 10018

Phone
212-629-6187
Fax
212-629-9243

LETTER OF TRANSMITTAL

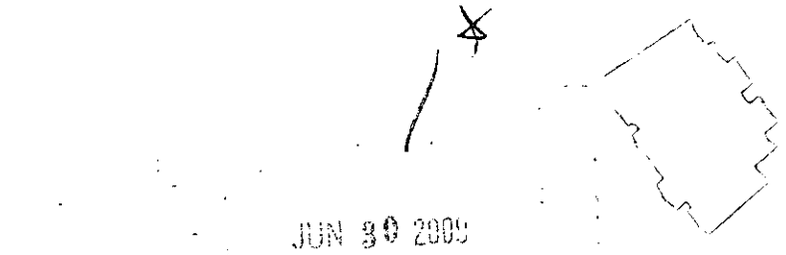

JUN 30 2009

VRH CONSTRUCTION CORP.
General Contractors & Construction Managers

Action Key

1 For your records and/or use
2 For price quotation
3 For approval
4 Approved/Reviewed
5 Approved as noted: Re-submission not required
6 Approved as noted: Revise and re-submit
7 Rejected: Re-submit per contract documents

To	The Port Authority of NY & NJ	Transmittal No.	00017
	Two Gateway Center	Job No.	2030WO12
	15th Floor	Project	PANY/NJ-bt-200.200 WO 12
	Newark, NJ 07102		South Wing Emergency Stair Repairs
Attention	Ka Kei Chan		
Phone No.	973-792-4629 Fax 973-792-4602		

We are sending you herewith the following: ☐ Drawings ☒ Shop Drawings ☐ Samples ☐ Specifications ☒ Other:

Via: ☒ Attached ☐ Separate Cover Via Mail

Quantity	Drawing/Submittal No.	Description	Action
8	02094-002	Dwg: Title: Lead Abatement Package Desc: Lead Abatement Package	3

Remarks:

cc: P. Salvatore; A. Kaprielian/PANYNJ

Signed Anthony Carnabuci

By Anthony J. Carnabuci

Date 6/29/2009

625 Eighth Avenue
2nd Flr, North Building
New York, NY 10018

Phone
212-629-6187
Fax
212-629-9243

LETTER OF TRANSMITTAL

Action Key
1 For your records and/or use
2 For price quotation
3 For approval
4 Approved/Reviewed
5 Approved as noted: Re-submission not required
6 Approved as noted: Revise and re-submit
7 Rejected: Re-submit per contract documents

VRH CONSTRUCTION CORP.
General Contractors & Construction Managers

To	The Port Authority of NY & NJ	Transmittal No.	00011
	Two Gateway Center	Job No.	2030WO12
	15th Floor	Project	PANY/NJ-bt-200.200 WO 12
	Newark, NJ 07102		South Wing Emergency Stair Repairs
Attention	Ka Kei Chan		
Phone No.	973-792-4629 Fax 973-792-4602		

We are sending you herewith the following: ☐ Drawings ☒ Shop Drawings ☐ Samples ☐ Specifications ☒ Other:

Via: ☒ Attached ☐ Separate Cover Via Mail

Quantity	Drawing/Submittal No.	Description	Action
9	15931-001	Dwg: Title: Double Deflection Adjustable Grille Desc: Double Deflection Adjustable Grille	3

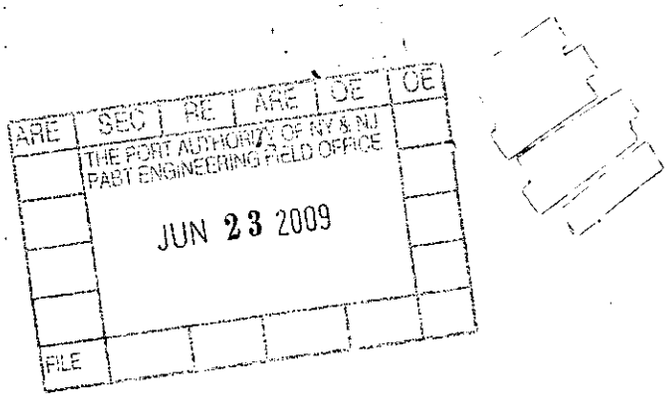

Remarks:

cc: P. Salvatore; A. Kaprielian/PANYNJ

Signed Anthony Carnabuci

By Anthony J. Carnabuci

Date 6/22/2009

625 Eighth Avenue
2nd Flr, North Building
New York, NY 10018

Phone
212-629-6187
Fax
212-629-9243

LETTER OF TRANSMITTAL

Action Key

1 For your records and/or use
2 For price quotation
3 For approval
4 Approved/Reviewed
5 Approved as noted: Re-submission not required
6 Approved as noted: Revise and re-submit
7 Rejected: Re-submit per contract documents

VRH
CONSTRUCTION CORP.
General Contractors & Construction Managers

To	The Port Authority of NY & NJ	Transmittal No.	00013
	Two Gateway Center	Job No.	2030WO12
	15th Floor	Project	PANY/NJ-bt-200.200 WO 12
	Newark, NJ 07102		South Wing Emergency Stair Repairs
Attention	Ka Kei Chan		
Phone No.	973-792-4629 Fax 973-792-4602		

We are sending you herewith the followir ☐ Drawings ☒ Shop Drawings ☐ Samples ☐ Specifications ☒ Other:

Via: ☒ Attached ☐ Separate Cover Via Mail

Quantity	Drawing/Submittal No.	Description	Action
9	16510-0001	Dwg: Title: Fluorescent 1'x4' lighting Fixture Desc: Fluorescent 1'x4' lighting Fixture	3

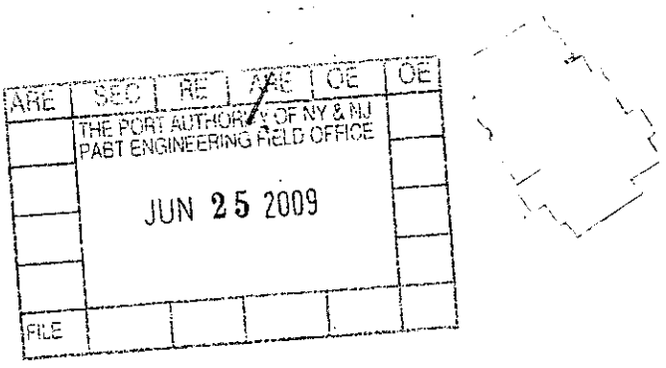

Remarks:

cc: P. Salvatore; A. Kaprielian/PANYNJ

Signed Anthony Carrabuci

By Anthony J. Carrabuci

Date 6/24/2009

625 Eighth Avenue
2nd Flr, North Building
New York, NY 10018

Phone
212-629-6187
Fax
212-629-9243

LETTER OF TRANSMITTAL

Action Key
1 For your records and/or use
2 For price quotation
3 For approval
4 Approved/Reviewed
5 Approved as noted: Re-submission not required
6 Approved as noted: Revise and re-submit
7 Rejected: Re-submit per contract documents

VRH CONSTRUCTION CORP.
General Contractors & Construction Managers

To	The Port Authority of NY & NJ	Transmittal No.	00005
	Two Gateway Center	Job No.	2030WO12
	15th Floor	Project	PANY/NJ-br-200.200 WO 12
	Newark, NJ 07102		South Wing Emergency Stair Repairs
Attention	Ka Kei Chan		
Phone No.	973-792-4629 Fax 973-792-4602		

We are sending you herewith the following: ☐ Drawings ☒ Shop Drawings ☐ Samples ☐ Specifications ☒ Other:

Via: ☒ Attached ☐ Separate Cover Via Mail

Quantity	Drawing/Submittal No.	Description	Action
7	15939-001	Dwg: Title: SAS Standard Encl. Starter NEMA 1 Desc: SAS Standard Encl. Starter NEMA 1	3
7	15860-001	Dwg: Title: Sidewall Exhaust Fan Desc: Sidewall Exhaust Fan	3

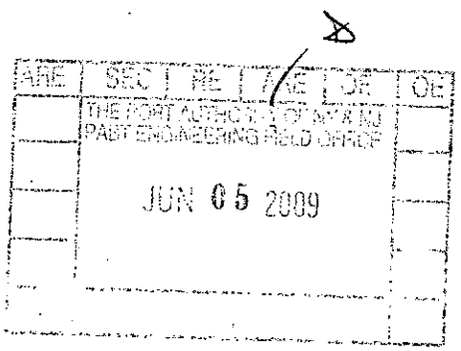

Remarks:

cc: P. Salvatore; A. Kaprielian/PANYNJ

Signed Anthony J. Carnabuci

By Anthony J. Carnabuci

Date 6/4/2009

625 Eighth Avenue
2nd Flr, North Building
New York, NY 10018

Phone
212-629-6187
Fax
212-629-9243

LETTER OF TRANSMITTAL

Action Key
1 For your records and/or use
2 For price quotation
3 For approval
4 Approved/Reviewed
5 Approved as noted: Re-submission not required
6 Approved as noted: Revise and re-submit
7 Rejected: Re-submit per contract documents

VRH CONSTRUCTION CORP.
General Contractors & Construction Managers

To	The Port Authority of NY & NJ	Transmittal No.	00005
	Two Gateway Center	Job No.	2030WO12
	15th Floor	Project	PANY/NJ-bt-200.200 WO 12
	Newark, NJ 07102		South Wing Emergency Stair Repairs
Attention	Ka Kei Chan		
Phone No.	973-792-4629 Fax 973-792-4602		

We are sending you herewith the followin ☒ Drawings ☒ Shop Drawings ☐ Samples ☐ Specifications ☒ Other:

Via: ☒ Attached ☐ Separate Cover Via Mail

Quantity	Drawing/Submittal No.	Description	Action
7	15939-001	Dwg: Title: SAS Standard Encl. Starter NEMA 1 Desc: SAS Standard Encl. Starter NEMA 1	3
7	15860-001	Dwg: Title: Sidewall Exhaust Fan Desc: Sidewall Exhaust Fan	3

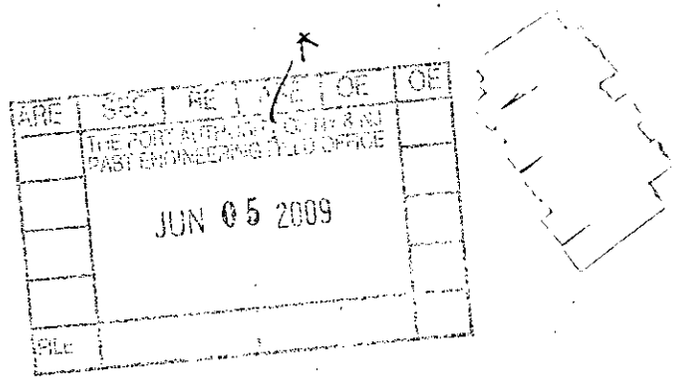

Remarks:

cc: P. Salvatore; A. Kaprielian/PANYNJ

Signed Anthony Carnabuci PE

By Anthony J. Carnabuci

Date 6/4/2009

625 Eighth Avenue
2nd Flr, North Building
New York, NY 10018

Phone
212-629-6187
Fax
212-629-9243

LETTER OF TRANSMITTAL

VRH
CONSTRUCTION CORP.
General Contractors & Construction Managers

Action Key

1 For your records and/or use
2 For price quotation
3 For approval
4 Approved/Reviewed
5 Approved as noted: Re-submission not required
6 Approved as noted: Revise and re-submit
7 Rejected: Re-submit per contract documents

To	The Port Authority of NY & NJ	Transmittal No.	00004
	Two Gateway Center	Job No.	2030WO12
	15th Floor	Project	PANY/NJ-bt-200.200 WO 12
	Newark, NJ 07102		South Wing Emergency Stair Repairs
Attention	Ka Kei Chan		
Phone No.	973-792-4629 Fax 973-792-4602		

We are sending you herewith the followir ☐ Drawings ☒ Shop Drawings ☐ Samples ☐ Specifications ☒ Other:

Via: ☒ Attached ☐ Separate Cover Via Mail

Quantity	Drawing/Submittal No.	Description	Action
7	08715-001	Dwg: Title: Finish Hardwr & Hollow Metal Sched. Desc: Finish Hardwr & Hollow Metal Sched.	3

Remarks:

cc: P. Salvatore; A. Kaprielian/PANYNJ

Signed Anthony Carnabuci for

By Anthony J. Carnabuci

Date 5/28/2009

625 Eighth Avenue
2nd Flr, North Building
New York, NY 10018

Phone
212-629-6187
Fax
212-629-9243

REQUEST FOR INFORMATION

Page 1 of 1

ARE	SEC	RE	ARE	OE	OE
	THE PORT AUTHORITY OF NY & NJ PABT ENGINEERING FIELD OFFICE JUL 02 2008				
FILE					

VRH
CONSTRUCTION CORP.
General Contractors & Construction Managers

To	The Port Authority of NY & NJ	Date	6/27/2008
	PABT Engr. Field Office	RFI No.	00001
	625 Eighth Ave., 2nd Fl. South Wing	Job No.	2030WO12
	New York, NY 10018	Project	PANY/NJ-bt-200.200 WO 12
Attention	Paul Salvatore		South Wing Emergency Stair Repairs
Phone No.	212-502-2286 Fax 212-502-2275	RFI Due By:	7/4/2008

We enclose a copy of the specification list included with your 6/16/08 cover letter with the dates of the copies of each listed spec that we have in our data base. These are the specs that we will be using unless directed otherwise by your office.

OF NOTE:
We do NOT HAVE specs 02094, 05121, 08130, 08900 or 09912.
We do NOT HAVE a Hardware Schedule (08715). The plans list required Hardware Sets by Number on Dwg A215 but the sets are not defined.

Signed	Art Knowlton
By	Art Knowlton
Date	6/27/2008

625 8th Avenue
New York, NY 10018

Phone
212-629-6187
Fax
212-629-9243

TRANSMITTAL

No. 00057

THE PORT AUTHORITY OF NY & NJ

2 Gateway Center
Newark, NJ 07102
Phone: 973-792-4629

PROJECT: WO12 South Wing Emerg. Stair Repairs

DATE: 3/18/2010

TO: VRH Construction Corp.
c/o Port Authority of NY & NJ
625 Eight Ave. 2nd Flr. North Bldg
New York, NY 10018

Contract No: PABT-200.200 WO12

ATTN: **Anthony Carnabuci**

WE ARE SENDING:	STATUS LEGEND:		SUBMITTED FOR:
☑ Shop Drawings	Approved (APP)	New Item (NEW)	☐ Approval
☐ Letter	Approved as Corrected (AAC)	Not Approved (NA)	☐ Your Use
☐ Prints	Approved as Noted (AAN)	Not Reviewed (NR)	☑ As Requested
☐ Change Order	For Record Only (FRO)	Review With Comments (RWC)	☐ Review and Comment
☐ Plans	For Your Information (FYI)	Review With No Comments (RWNC)	
☐ Samples	Incomplete (INC)	Superseded (SUPS)	DUE DATE:
☐ Specifications	SENT VIA:		
☑ Other: Made from Submittal	☑ Attached ☐ Separate Cover Via: Mail		

PACKAGE	SUBMITTAL	DWG. #	REV.	COPIES	DATE	DESCRIPTION	STATUS
16782	16782-0006	E-31918	R000	2	3/18/2010	Dwg: E-31918 Desc: CCTV Conduit Run & Seismic Detail for CCTV System Stair "R"	AAC

Remarks:

"REVISE AS NOTED & RESUBMIT".

( ) Please make necessary corrections as noted, if any. Place approval form on original of each approved drawing or cut, insert date of approval within same and return _____ prints each. IT IS REQUESTEDTHAT THESE PRINTS BE RETURNED TO US WITHIN 5 DAYS.

( ) CLEAR TRANSPARENCY REQUIRED
The Contract required that the Contractor shall furnish to the engineer one set of drawings, all clearly revised, completed and brought up-to-date showing all of the permanent equipment, materials and construction as actually used.

EOC | SEC | RE | AE | OE | FILE

THE PORT AUTHORITY OF NY & NJ
PATC ENGINEERING FIELD OFFICE

MAR 22 2010

Your earliest attention to these items would be greatly appreciated so as to avoid delay in the progress of the job.

Very Truly Yours,

Signed: _____
Ka-Kei Chan

CC: S. Wondoloski (TMS Only), P. Salvatore (2 Copies), File (1 Copy)
Response to VRH Construction Corp. , Transmittal #00074

Contractor:	Total Electrical Construction Co., Inc.		
Date:	01/25/10		
Project:	WO#12 – South Wing Emergency Stair Repair		
Contract:	BT-200.200		
Item:	CCTV Conduit Run & Seismic Detail for CCTV System Stair "R"		
Spec Section:	16782 – Closed Circuit Television (CCTV) System		
Page:	16782-7		
Paragraph:	Appendix "A" – 1.A.1.b		
Submittal No.:	16782-05	**Rev:**	0
Approved By:	Michael Lipari		

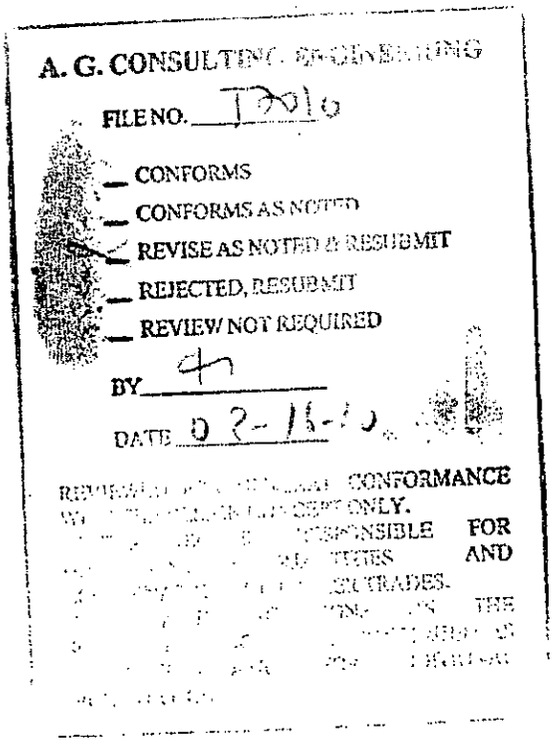

16782-006
200.200 W.O. 12

AG CONSULTING ENGINEERING
RECEIVED 2/10/10
T2010

MASON INDUSTRIES, Inc.
Manufacturers of Vibration Control Products
350 Rabro Drive, Hauppauge, NY 11788, 631/348-0282, FAX 631/348-0279
708 N. Valley St. Suite K, Anaheim, CA 92801, 714/535-2727, FAX 714/535-5738

CERTIFIED FOR
JOB NAME PA BUS DEPOT
CUSTOMER TOTAL ELECTRIC
CUSTOMER P.O. -
MASON S.O. -
DWG. NO. F-400692

STATIC ANALYSIS

SYSTEM INFORMATION

Tag(s): CONDUIT (40 FEET OF TWO 3 1/2" CONDUITS IS WORST CASE)

W, Equipment weight = 1120 lbs.

Fp, Horizontal force established by earthquake = 560 lbs.

Fsab, Force established in single arm brace due to earthquake = 792 lbs.

t, Tension in one SSBS-12 anchor to structure = 560 lbs.

v, Shear in one SSBS-12 anchor to structure = 560 lbs.

GRAVITATIONAL FORCE

G: Gravitational force factor = .5

Fp = .5 x Wp
= 560 lbs.

1/19/10

DWN.: SC	CHKD.:	DATE: 1/19/10

MASON INDUSTRIES, Inc.
Manufacturers of Vibration Control Products
350 Rabro Drive, Hauppauge, NY 11788, 631/348-0282, FAX 631/348-0279
708 N. Valley St. Suite K, Anaheim, CA 92801, 714/535-2727, FAX 714/535-5738

CERTIFIED FOR
JOB NAME PA BUS DEPOT
CUSTOMER TOTAL ELECTRIC
CUSTOMER P.O. -
MASON S.O. -
DWG. NO. F- 400693

STATIC ANALYSIS

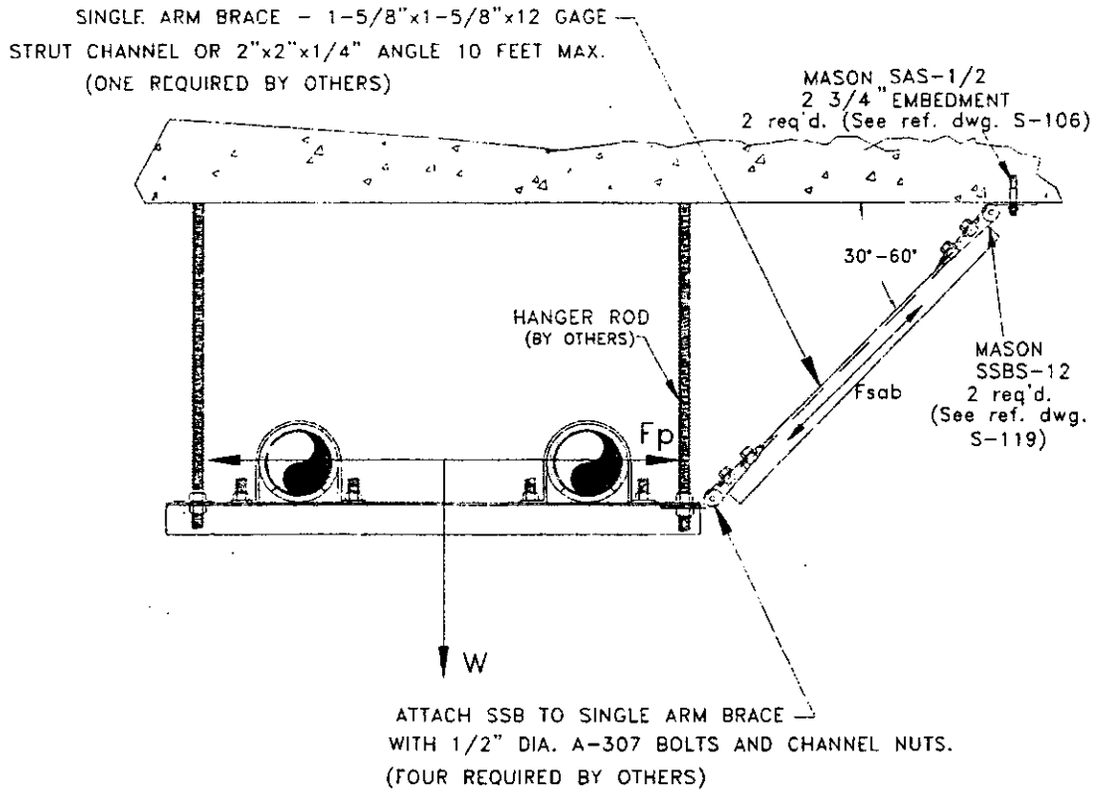

FIGURE 1: ELEVATION VIEW OF CONDUIT RACK

DWN.: SC	CHKD.:	DATE: 1/19/10

MASON INDUSTRIES, Inc.
Manufacturers of Vibration Control Products
350 Rabro Drive, Hauppauge, NY 11788, 631/348-0282, FAX 631/348-0279
708 N. Valley St. Suite K, Anaheim, CA 92801, 714/535-2727, FAX 714/535-5738

CERTIFIED FOR
JOB NAME PA BUS DEPOT
CUSTOMER TOTAL ELECTRIC
CUSTOMER P.O. -
MASON S.O. -
DWG. NO. F-400694

STATIC ANALYSIS

References

Force established in SAB assembly due to earthquake

$$Fsab = Fp / \cos 45°$$

Therefore, Fsab = 792 lbs.

Therefore, a SSBS-12 Single Arm Brace assembly is rated at 1250 lbs.
A 10' length of 1 5/8"x1-5/8"x12 gage strut is rated at 1228 lbs

Reference Dwg. S-119

Reference B-Line Strut Systems Page 19

Force transmitted to anchor

$$v = Fca \times \cos 45°$$

$$t = Fca \times \sin 45°$$

Therefore, v = 560 lbs.

Therefore, t = 560 lbs.

The allowable loads for anchors subjected to combined shear and tension forces are determined by the ratio of actual shear to allowable shear plus the ratio of the actual tension to the allowable tension not to exceed one. The above can be satisfied by the expression;

$$\left\{\frac{V}{Vallow.}\right\}^{5/3} + \left\{\frac{T}{Tallow.}\right\}^{5/3} \leq 1.0$$

Using SAS-1/2 with 2 3/4 " minimum embedment we get:

Vallow.=1540 lbs. and Tallow.=820 lbs.

Inserting these values we have:

$$\left\{\frac{560}{1540}\right\}^{5/3} + \left\{\frac{560}{820}\right\}^{5/3} = 0.71 \leq 1.0$$

Therefore the above anchors are adequate.

Reference Dwg. S-106

I.C.B.O. REPORT NO. 1821

DWN.: SC	CHKD.:	DATE: 1/19/10

MASON INDUSTRIES, Inc.
Manufacturers of Vibration Control Products

350 Rabro Drive
Hauppauge, NY 11788
631/348-0282
FAX 631/348-0279
Info@Mason-Ind.com

2101 W. Crescent Ave., Suite D
Anaheim, CA 92801
714/535-2727
FAX 714/535-5738
Info@MasonAnaheim.com

CERTIFIED FOR

JOB NAME : Port Authority Bus Depot
CUSTOMER : TOTAL ELECTRIC
CUSTOMER P.O. : -
MASON M.I. : -
DWG. NO. : S-106

TYPE

SAS

Certified Seismic Anchor Stud with Nut Washer

ALL PARTS ELECTROPLATED

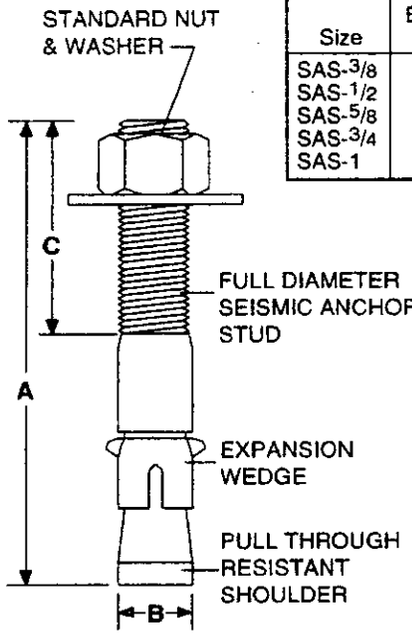

TYPE SAS ANCHOR STUD RATINGS installed into Stone Aggregate Concrete

Size	Minimum Anchor Embedment (in) *(mm)*	Minimum Edge Distance (in) *(mm)*	Minimum Anchor Spacing (in) *(mm)*	Concrete Type: 3000 psi *(20 Mpa)* Tension* (lbs) *(kg)*†	3000 psi Shear (lbs) *(kg)*†	4000 psi (27 Mpa) Tension* (lbs) *(kg)*†	4000 psi Shear (lbs) *(kg)*†
SAS-3/8	1 3/4 *44*	2 5/8 *67*	5 1/4 *133*	445 *202*	765 *347*	450 *204*	770 *349*
SAS-1/2	2 3/4 *70*	3 3/4 *95*	7 1/2 *191*	820 *372*	1540 *699*	850 *386*	1565 *710*
SAS-5/8	3 1/4 *83*	4 7/8 *124*	9 3/4 *248*	1210 *549*	2285 *1025*	1295 *587*	2440 *1107*
SAS-3/4	5 *127*	5 5/8 *143*	11 1/4 *286*	1545 *701*	3675 *1667*	1625 *737*	3965 *1798*
SAS-1	6 3/4 *171*	6 *152*	12 *305*	— —	— —	4815 *2184*	9355 *4243*

*These tension values are applicable when the anchors are installed without special inspection as set forth in Section 1701.1 of the UBC. When anchors are installed with special inspection as set forth in Section 1701.1 of the UBC, the tabulated values may be increased by 100%.

†For kN divide kg by 102

Notes:

The tabulated values are for anchors installed at the specified spacings and edge distances. Spacings may be reduced by 50% provided the shear and tension values are reduced by 40%. Edge distances may be reduced by 50% provided the tension values are reduced by 40% and the shear values are reduced by 50%. Linear interpolation may be used for intermediate spacings.

For combined tension and shear forces on anchors, use the following equations:
$(P_s/P_t)^{5/3} + (V_s/V_t)^{5/3} \leq 1.0$, where: P_s and V_s are Applied Forces
and P_t and V_t are Allowable Forces
Ratings may be increased 33 1/3% to accomodate periodic forces such as wind or seismic loads. Tabulated values include a safety factor of 8 to 1 for tension forces and 4 to 1 for shear forces.

TYPE SAS ANCHOR STUD DIMENSIONS

Size	A (in)	A *(mm)*	B (in)	B *(mm)*	C (in)	C *(mm)*
SAS-3/8	3	*76*	3/8	*10*	1 1/4	*32*
SAS-1/2	4 1/4	*108*	1/2	*13*	1 1/2	*38*
SAS-5/8	5	*127*	5/8	*16*	1 3/4	*44*
SAS-3/4	7	*178*	3/4	*19*	2	*51*
SAS-1	9	*229*	1	*25*	2 1/4	*57*

CERTIFICATION DATA

DWN : SC	CHKD :	DATE : 1/19/10	DWG NO. : S-106

MASON INDUSTRIES, Inc.
Manufacturers of Vibration Control Products
NY Mailing Address: PO Box 410, Smithtown, NY 11787
350 Rabro Drive, Hauppauge, NY 11788
631/348-0282
FAX 631/348-0279
Info@Mason-Ind.com
2101 W. Crescent Ave., Suite D, Anaheim, CA 92801
714/535-2727
FAX 714/535-5738
Info@MasonAnaheim.com

CERTIFIED FOR
JOB NAME : Port Authority Bus Depot
CUSTOMER: TOTAL ELECTRIC
CUSTOMER P.O.: -
MASON M.I.:
DWG. NO. : S-119

TYPE
SSBS
Seismic Solid Brace Strut Anchor

Finish:
All parts are Zinc Electro Plated.

Solid Brace Anchor (Formed Steel)

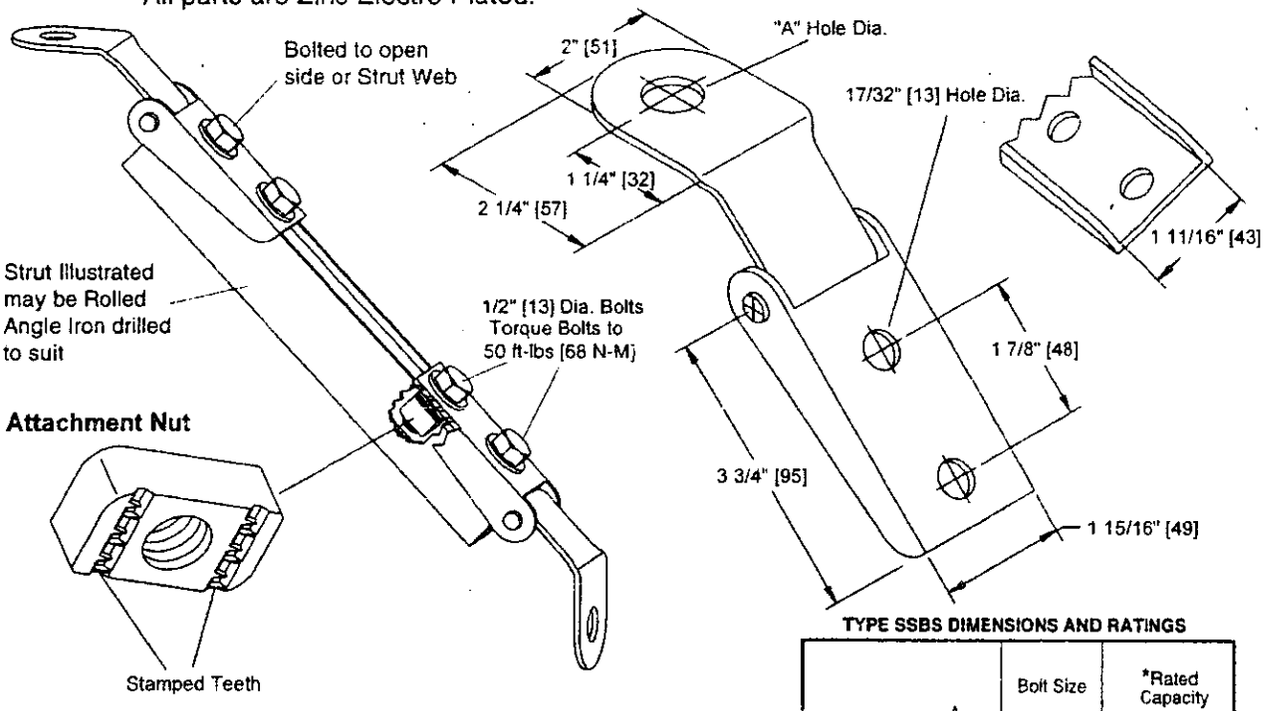

TYPE SSBS DIMENSIONS AND RATINGS

Size	A [in]	A [mm]	Bolt Size [in]	Bolt Size [mm]	*Rated Capacity [lbs]	*Rated Capacity [kN]
SSBS-12	17/32	13	3/8	9	1000	5.6
SSBS-12	17/32	13	1/2	13	1250	5.6
SSBS-20	25/32	20	5/8	16	2000	11.2
SSBS-20	25/32	20	3/4	19	2500	11.2
SSBS-25	1 1/32	26	7/8	22	2500	13.3
SSBS-25	1 1/32	26	1	25	3000	13.3

* Attachment nuts must have stamped teeth to achieve these values. Washers are required at all Bolted Connections.

Ratings are based on attachment to steel.
Assembly Ratings are the lowest value of either the Assembly Capacity, slippage of the Strut Attachment Nuts or the capacity of the single hole anchorage bolt. Ratings are based on the worst case angle.
Ratings may change depending on attachment methods to concrete.

Testing was supervised and certified by an independant engineer registered in the state of California.
Preferred installation ange is 45°. Maximum variation ±15°.

NOTE: Not to be used as a vertical hanger for equipment, ductwork or piping. To be used as a seismic restraint only.

Ratings are from test data and calculations used to obtain California OSHPD Preapproval Number OPA-0349.

APPROVED
California Office of Statewide Health Planning and Development
FIXED EQUIPMENT ANCHORAGE
OPA-0349 AUGUST 5, 2002
Bill Staehlin (916) 654-3362

CERTIFICATION DATA

TAG : _____

UNIT : _____

SUBMITTED FOR TYPE APPROVAL ONLY - EXACT SIZES TO BE

DWN : SC	CHKD:	DATE : 1/19/10

DWG NO. : S-119

THE PORT AUTHORITY OF NY & NJ

TRANSMITTAL

No. 00064

2 Gateway Center
Newark, NJ 07102
Phone: 973-792-4691
Fax: 973-792-4601

PROJECT: WO12 South Wing Emerg. Stair Repairs

DATE: 5/12/2010

TO: VRH Construction Corp.
c/o Port Authority of NY & NJ
625 Eight Ave. 2nd Flr. North Bldg
New York, NY 10018

Contract No: PABT-200.200 WO12

REF: 16782-0006

ATTN: **Anthony Carnabuci**

WE ARE SENDING:	STATUS LEGEND:		SUBMITTED FOR:
☐ Shop Drawings	Approved (APP)	Not Approved (NA)	☐ Approval
☑ Letter	Approved as Corrected (AAC)	Not Reviewed (NR)	☑ Your Use
☐ Prints	Approved as Noted (AAN)	Reviewed (Updates Required) (RUR)	☐ As Requested
☐ Change Order	For Record Only (FRO)	Reviewed With Comments (RWC)	☐ Review and Comment
☐ Plans	For Your Information (FYI)	Reviewed With No Comments (RWNC)	
☐ Samples	New Item (NEW)	Superseded (SUPS)	
☐ Specifications	**SENT VIA:**		**DUE DATE:**
☑ Other: Made from Submittal	☑ Attached ☐ Separate Cover Via: Mail		

PACKAGE	SUBMITTAL	DWG. #	REV.	COPIES	DATE	DESCRIPTION	STATUS
16782	16782-0006	E-31918	R001	2	5/12/2010	Desc: CCTV Conduit Run & Seismic Detail	APP

( ) Please make necessary corrections as noted, if any. Place approval form on original of each approved drawing or cut, insert date of approval within same and return _____ prints each. IT IS REQUESTEDTHAT THESE PRINTS BE RETURNED TO US WITHIN 5 DAYS.

( ) The Contract required that the Contractor shall furnish to the engineer one set of drawings, all clearly revised, completed and brought up-to-date showing all of the permanent equipment, materials and construction as actually used.

Your earliest attention to these items would be greatly appreciated so as to avoid delay in the progress of the job.

Prepared By: **Darlene Coitino**
Contract Manager Specialist

MAY 14 2010

CC: T. Chan, P. Salvatore w/att., J. Warner w/att; A. Kryagin
File w/ att(1)

Contractor:	Total Electrical Construction Co., Inc.		
Date:	04/13/10		
Project:	WO#12 – South Wing Emergency Stair Repair		
Contract:	BT-200.200		
Item:	CCTV Conduit Run & Seismic Detail for CCTV System Stair "R"		
Spec Section:	16782 – Closed Circuit Television (CCTV) System		
Page:	16782-7		
Paragraph:	Appendix "A" – 1.A.1.b		
Submittal No.:	16782-036	**Rev:**	1
Approved By:	Michael Lipari		

16782-006
200.200 W.O. 12

AG CENTRAL INC
ENGINEERING PC
RECEIVED 4/19/10
JOB 7010

MASON INDUSTRIES, Inc.
Manufacturers of Vibration Control Products
350 Rabro Drive, Hauppauge, NY 11788, 631/348-0282, FAX 631/348-0279
708 N. Valley St. Suite K, Anaheim, CA 92801, 714/535-2727, FAX 714/535-5738

CERTIFIED FOR
JOB NAME PA BUS DEPOT
CUSTOMER TOTAL ELECTRIC
CUSTOMER P.O. -
MASON S.O. -
DWG. NO. F-400692

STATIC ANALYSIS

SYSTEM INFORMATION

Tag(s): CONDUIT (40 FEET OF TWO 3 1/2" CONDUITS IS WORST CASE)

W, Equipment weight = 1120 lbs.

Fp, Horizontal force established by earthquake = 560 lbs.

Fsab, Force established in single arm brace due to earthquake = 792 lbs.

t, Tension in one SSBS-12 anchor to structure = 560 lbs.

v, Shear in one SSBS-12 anchor to structure = 560 lbs.

A. G. CONSULTING ENGINEERING
FILE NO 171
X CONFORMS
_ CONFORMS AS NOTED
_ REVISE AS NOTED & RESUBMIT
_ REJECTED, RESUBMIT
_ REVIEW NOT REQUIRED
BY [signature]
DATE 05-04-12
REVIEWED FOR GENERAL CONFORMANCE WITH THE DESIGN CONCEPT ONLY. CONTRACTOR IS RESPONSIBLE FOR DIMENSIONS, QUANTITIES AND COORDINATION WITH OTHER TRADES. CONSULTANTS NOTATIONS ON THE SUBMITTAL IS NOT TO BE CONSTRUED AS AN AUTHORIZATION FOR ADDITIONAL WORK OR COST

GRAVITATIONAL FORCE

G: Gravitational force factor = .5

Fp = .5 FORWp = 560 lbs.

STATE OF NEW YORK
SEAN P. CUNNINGHAM
NO 089932
LICENSED PROFESSIONAL ENGINEER

1/19/10

DWN.: SC	CHKD.:	DATE: 1/19/10

MASON INDUSTRIES, Inc.
Manufacturers of Vibration Control Products
350 Rabro Drive, Hauppauge, NY 11788, 631/348-0282, FAX 631/348-0279
708 N. Valley St. Suite K, Anaheim, CA 92801, 714/535-2727, FAX 714/535-5738

CERTIFIED FOR
JOB NAME PA BUS DEPOT
CUSTOMER TOTAL ELECTRIC
CUSTOMER P.O. -
MASON S.O. -
DWG. NO. F- 400693

STATIC ANALYSIS

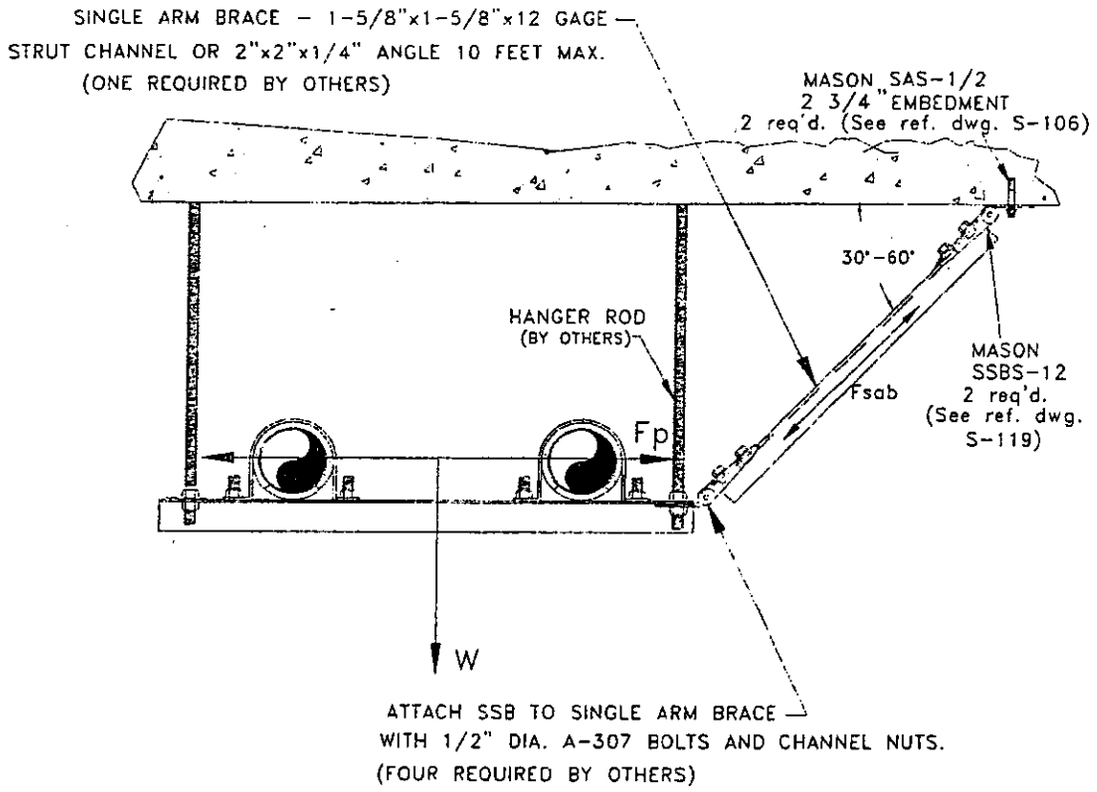

FIGURE 1: ELEVATION VIEW OF CONDUIT RACK

DWN.: SC	CHKD.:	DATE: 1/19/10

MASON INDUSTRIES, Inc.
Manufacturers of Vibration Control Products
350 Rabro Drive, Hauppauge, NY 11788, 631/348-0282, FAX 631/348-0279
708 N. Valley St. Suite K, Anaheim, CA 92801, 714/535-2727, FAX 714/535-5738

CERTIFIED FOR
JOB NAME PA BUS DEPOT
CUSTOMER TOTAL ELECTRIC
CUSTOMER P.O. -
MASON S.O. -
DWG. NO. F-400694

STATIC ANALYSIS

References

Force established in SAB assembly due to earthquake

$$Fsab = Fp / \cos 45°$$

Therefore, Fsab = 792 lbs.

Therefore, a SSBS-12 Single Arm Brace assembly is rated at 1250 lbs. A 10' length of 1 5/8"x1-5/8"x12 gage strut is rated at 1228 lbs

Reference Dwg. S-119

Reference B-Line Strut Systems Page 19

Force transmitted to anchor

$$v = Fca \times \cos 45°$$

$$t = Fca \times \sin 45°$$

Therefore, v = 560 lbs.

Therefore, t = 560 lbs.

The allowable loads for anchors subjected to combined shear and tension forces are determined by the ratio of actual shear to allowable shear plus the ratio of the actual tension to the allowable tension not to exceed one. The above can be satisfied by the expression;

$$\left\{\frac{V}{Vallow.}\right\}^{5/3} + \left\{\frac{T}{Tallow.}\right\}^{5/3} \leq 1.0$$

Using SAS-1/2 with 2 3/4 " minimum embedment we get:

Vallow.=1540 lbs. and Tallow.=820 lbs.

Reference Dwg. S-106

I.C.B.O. REPORT NO. 1821

Inserting these values we have:

$$\left\{\frac{560}{1540}\right\}^{5/3} + \left\{\frac{560}{820}\right\}^{5/3} = 0.71 \leq 1.0$$

Therefore the above anchors are adequate.

DWN.: SC	CHKD.:	DATE: 1/19/10

MASON INDUSTRIES, Inc.
Manufacturers of Vibration Control Products

350 Rabro Drive
Hauppauge, NY 11788
631/348-0282
FAX 631/348-0279
Info@Mason-Ind.com

2101 W. Crescent Ave., Suite D
Anaheim, CA 92801
714/535-2727
FAX 714/535-5738
Info@MasonAnaheim.com

CERTIFIED FOR	
JOB NAME	: Port Authority Bus Depot
CUSTOMER	: TOTAL ELECTRIC
CUSTOMER P.O.	: -
MASON M.I.	: -
DWG. NO.	: S-106

TYPE
SAS
Certified Seismic Anchor Stud with Nut Washer

ALL PARTS ELECTROPLATED

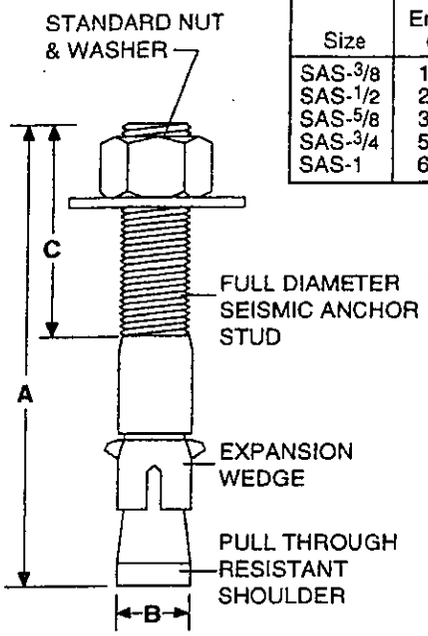

TYPE SAS ANCHOR STUD RATINGS installed into Stone Aggregate Concrete

Size	Minimum Anchor Embedment (in) *(mm)*	Minimum Edge Distance (in) *(mm)*	Minimum Anchor Spacing (in) *(mm)*	Concrete Type: 3000 psi *(20 Mpa)* Tension* (lbs) *(kg)†*	3000 psi *(20 Mpa)* Shear (lbs) *(kg)†*	4000 psi (27 Mpa) Tension* (lbs) *(kg)†*	4000 psi (27 Mpa) Shear (lbs) *(kg)†*
SAS-3/8	1 3/4 *44*	2 5/8 *67*	5 1/4 *133*	445 *202*	765 *347*	450 *204*	770 *349*
SAS-1/2	2 3/4 *70*	3 3/4 *95*	7 1/2 *191*	820 *372*	1540 *699*	850 *386*	1565 *710*
SAS-5/8	3 1/4 *83*	4 7/8 *124*	9 3/4 *248*	1210 *549*	2285 *1025*	1295 *587*	2440 *1107*
SAS-3/4	5 *127*	5 5/8 *143*	11 1/4 *286*	1545 *701*	3675 *1667*	1625 *737*	3965 *1798*
SAS-1	6 3/4 *171*	6 *152*	12 *305*	— —	— —	4815 *2184*	9355 *4243*

*These tension values are applicable when the anchors are installed without special inspection as set forth in Section 1701.1 of the UBC. When anchors are installed with special inspection as set forth in Section 1701.1 of the UBC, the tabulated values may be increased by 100%.

† For kN divide kg by 102

Notes:

The tabulated values are for anchors installed at the specified spacings and edge distances. Spacings may be reduced by 50% provided the shear and tension values are reduced by 40%. Edge distances may be reduced by 50% provided the tension values are reduced by 40% and the shear values are reduced by 50%. Linear interpolation may be used for intermediate spacings.

For combined tension and shear forces on anchors, use the following equations:
$(P_s/P_t)^{5/3} + (V_s/V_t)^{5/3} \leq 1.0$, where: P_s and V_s are Applied Forces
and P_t and V_t are Allowable Forces
Ratings may be increased 33 1/3% to accomodate periodic forces such as wind or seismic loads. Tabulated values include a safety factor of 8 to 1 for tension forces and 4 to 1 for shear forces.

TYPE SAS ANCHOR STUD DIMENSIONS

Size	A (in)	A *(mm)*	B (in)	B *(mm)*	C (in)	C *(mm)*
SAS-3/8	3	*76*	3/8	*10*	1 1/4	*32*
SAS-1/2	4 1/4	*108*	1/2	*13*	1 1/2	*38*
SAS-5/8	5	*127*	5/8	*16*	1 3/4	*44*
SAS-3/4	7	*178*	3/4	*19*	2	*51*
SAS-1	9	*229*	1	*25*	2 1/4	*57*

CERTIFICATION DATA

DWN : SC	**CHKD :**	**DATE :** 1/19/10	**DWG NO. :** S-106

MASON INDUSTRIES, Inc.
Manufacturers of Vibration Control Products
NY Mailing Address: PO Box 410, Smithtown, NY 11787
350 Rabro Drive, Hauppauge, NY 11788
631/348-0282
FAX 631/348-0279
Info@Mason-Ind.com
2101 W. Crescent Ave., Suite D, Anaheim, CA 92801
714/535-2727
FAX 714/535-5738
Info@MasonAnaheim.com

CERTIFIED FOR
JOB NAME : Port Authority Bus Depot.
CUSTOMER: TOTAL ELECTRIC
CUSTOMER P.O.: -
MASON M.I.:
DWG. NO. : S-119

TYPE
SSBS
Seismic Solid Brace Strut Anchor

Finish:
All parts are Zinc Electro Plated.

Solid Brace Anchor (Formed Steel)

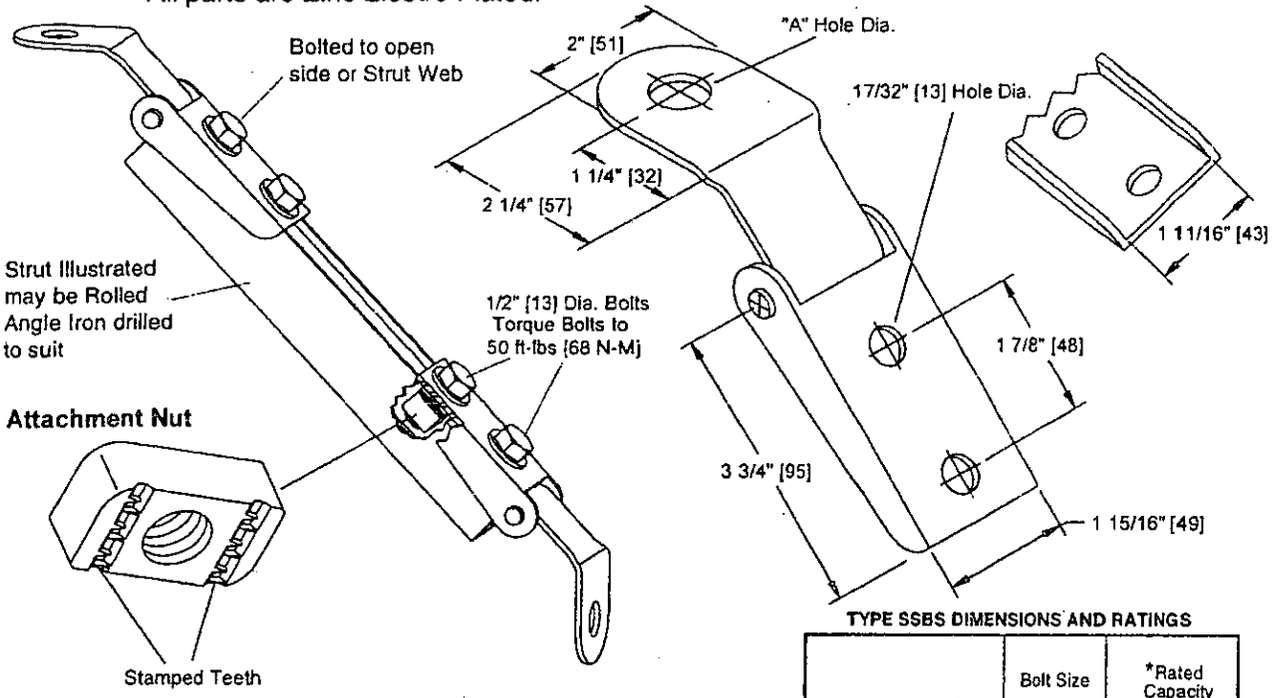

TYPE SSBS DIMENSIONS AND RATINGS

Size	A [in]	A [mm]	Bolt Size [in]	Bolt Size [mm]	*Rated Capacity [lbs]	*Rated Capacity [kN]
SSBS-12	17/32	13	3/8	9	1000	5.6
SSBS-12	17/32	13	1/2	13	1250	5.6
SSBS-20	25/32	20	5/8	16	2000	11.2
SSBS-20	25/32	20	3/4	19	2500	11.2
SSBS-25	1 1/32	26	7/8	22	2500	13.3
SSBS-25	1 1/32	26	1	25	3000	13.3

* Attachment nuts must have stamped teeth to achieve these values. Washers are required at all Bolted Connections.

Ratings are based on attachment to steel.
Assembly Ratings are the lowest value of either the Assembly Capacity, slippage of the Strut Attachment Nuts or the capacity of the single hole anchorage bolt. Ratings are based on the worst case angle.
Ratings may change depending on attachment methods to concrete.

Testing was supervised and certified by an independant engineer registered in the state of California.
Preferred installation ange is 45°. Maximum variation ±15°.

NOTE: Not to be used as a vertical hanger for equipment, ductwork or piping. To be used as a seismic restraint only.

Ratings are from test data and calculations used to obtain California OSHPD Preapproval Number OPA-0349.

APPROVED
California Office of Statewide Health Planning and Development
FIXED EQUIPMENT ANCHORAGE
OPA-0349 AUGUST 5, 2002
Bill Staehlin (916) 654-3362

CERTIFICATION DATA

TAG : _____

UNIT : _____

SUBMITTED FOR TYPE APPROVAL ONLY - EXACT SIZES TO BE

DWN : SC	CHKD:	DATE : 1/19/10

DWG NO. : S-119

THE PORT AUTHORITY OF NEW YORK AND NEW JERSEY
MATERIALS ENGINEERING DIVISION
ASPHALT CONCRETE TRUCK TICKET

LOAD #: 1 DATE: 5/5/10

TRUCK #: Generator TIME: 8:20 (AM) PM

CONTRACT #: BT-200.200 W/O 12

PLANT: Newark Asphalt

CONTRACTOR: VRH Construction

MIX: ☐ _____ BOTTOM ☑ I-5A PG64-22 TOP

☐ _____ BASE ☐ _____

WEIGHT 1 (TONS) TEMPERATURE: 325

Richard Sutton
INSPECTOR

BT-200.200
W.O. 12

THE PORT AUTHORITY OF NY & NJ

TRANSMITTAL

No. 00058

2 Gateway Center
Newark, NJ 07102
Phone: 973-792-4629

PROJECT: WO12 South Wing Emerg. Stair Repairs
DATE: 3/19/2010

TO: VRH Construction Corp.
c/o Port Authority of NY & NJ
625 Eight Ave. 2nd Flr. North Bldg
New York, NY 10018

Contract No: PABT-200:200 WO12

ATTN: **Anthony Carnabuci**

WE ARE SENDING:	STATUS LEGEND:		SUBMITTED FOR:
☐ Shop Drawings	Approved (APP)	New Item (NEW)	☐ Approval
☐ Letter	Approved as Corrected (AAC)	Not Approved (NA)	☑ Your Use
☐ Prints	Approved as Noted (AAN)	Not Reviewed (NR)	☐ As Requested
☐ Change Order	For Record Only (FRO)	Review With Comments (RWC)	☐ Review and Comment
☐ Plans	For Your Information (FYI)	Review With No Comments (RWNC)	
☐ Samples	Incomplete (INC)	Superseded (SUPS)	
☐ Specifications	SENT VIA:		DUE DATE:
☑ Other: Made from Submittal	☑ Attached ☐ Separate Cover Via: Mail		

PACKAGE	SUBMITTAL	DWG. #	REV.	COPIES	DATE	DESCRIPTION	STATUS
08715	08715-0001		R001	5	3/19/2010	Dwg: Title: Finish Hardware & Hollow Metal Sche Desc: Finish Hardware & Hollow Metal Sche	AAN

( ) Please make necessary corrections as noted, if any. Place approval form on original of each approved drawing or cut, insert date of approval within same and return _____ prints each. IT IS REQUESTEDTHAT THESE PRINTS BE RETURNED TO US WITHIN 5 DAYS.

( ) CLEAR TRANSPARENCY REQUIRED
The Contract required that the Contractor shall furnish to the engineer one set of drawings, all clearly revised. completed and brought up-to-date showing all of the permanent equipment, materials and construction as actually used.

MAR 24 2010

Your earliest attention to these items would be greatly appreciated so as to avoid delay in the progress of the job.

Very Truly Yours,
Signed: _____
Ka-Kei Chan

CC: J. Warner (1 Copy), P. Salvatore (1 Copy), File (1 Copy)
Response to VRH Construction Corp. Transmittal #00071

SECTION 08715

FINISH HARDWARE

APPENDIX "B"

FINISH HARDWARE SCHEDULE

The following schedule contains a listing of hardware for each door (and roof hatch and locker, if any) by set number which corresponds with hardware set number shown on the Contract Drawings.

*Denotes manufacturers scheduled for Work of this Section, or approved equal.

**Denotes manufacturers scheduled for Work of this Section, with no substitution permitted.

Insert * or ** adjacent to manufacturers below as appropriate for the Contract.

Item	Manufacturer	Symbol
Locks/Latches	Best	B
	Corbin	C
	Yale	Y
Cylinders	Best	B
	Corbin	C
	Yale	Y
Butts/Hinges	Hager	H
	McKinney	MC
	Stanley	ST
Exit/Panic Devices	Corbin	C
	Yale	Y
	Von Duprin	V
Door Bolts	Builders Brass Works	BW
	Ives	I
	Stanley	ST
Overhead Closers	Corbin	C
	LCN	LCN
	Yale	Y
Smoke-activated Closures	Corbin	C
	Dorma	D
	Rixon Firemark	RF
Floor Closers	Door O Matic	DM
	Dorma	D
	Rixon Firemark	RF
Overhead Stop	Corbin	C
	Glynn-Johnson	GJ
	Rixon Firemark	RF
Door Stripping, Drop Seal & Threshold	A.J. May	M
	Pemko	P
	Zero	Z

Silencers	Builders Brass Works	BW
	Ives	I
	Quality	Q
Push/Pull Units and Protection Plates	Builders Brass Works	BW
	Tremco	T
	Quality Hardware Co.	QH
Sliding/Bi-fold Hardware Sets	Grant	GR
	Lawrence	LA
	Stanley	ST
Door Trim/Stops	Builders Brass Works	BW
	Glynn-Johnson	GJ
	Ives	I

HARDWARE SETS

Insert * or ** adjacent to manufacturers below as appropriate for the Fill-in below and add or delete set numbers as appropriate for Contract.

HW1	[For Each Door No.	]
HW2	[For Each Door No.	]
HW3	[For Each Door No.	]
HW4	[For Each Door No.	]
HW5	[For Each Door No.	]
HW6	[For Each Door No.	]
HW7	[For Each Door No.	]
HW8	[For Each Door No.	]
HW9	[For Each Door No.	]
HW10	[For Locker(s) in Room(s) No.	]

END OF APPENDIX "B"

san fanandre justin ● architects pc
259 west 30th street
new york ny 10001
tel 212 463 9550
fax 212 463 9597

SPECIFICATION NOTES

SECTION 08715:

PRODUCT ITEM: MAGNETICAL LOCK

MANUFACTURER: LOCKNETICS MAGFORCE 390+ SERIES ELECTROMAGNETIC LOCK
OR APPROVED EQUAL

SCHEDULE OF FINISH HARDWARE &

HOLLOW METAL SCHEDULE

FOR

PORT AUTHORITY BUS TERMINAL
SOUTH WING EMERGENCY STAIR REPAIR
WORK ORDER #12

JOB #090192SM

ARCHITECT/DESIGNER: SAN FANANDRE JUSTIN ARCHITECTS
140 WEST 22 STREET
NEW YORK, NY, NY 10011
PHONE - 212-463-9550

GENERAL CONTRACTOR: V.R.H. CONSTRUCTION CORP.
C/O PORT AUTHORITY
ATTENTION: JOE POINTEK
620 8TH AVENUE
NEW YORK, NY
PHONE - 347-203-6972

SCHEDULE BY: WEINSTEIN & HOLTZMAN, INC.
29 PARK ROW
NEW YORK, NY 10038
PHONE - 212-233-4651
FAX - 212-571-5301

CONSULTANT: STACY MAKSON

FOR APPROVAL MAY 20 2009
REVISED FOR FILES AND DISTRIBUTION JAN 11 2010

08715-001
200.200 W.O. 12

General Notes

1. Please answer all questions herein. If any questions remain unanswered, we will not be able to order hardware. Please contact the project manager if anything is not clear.
2. The purpose of this submittal is to list hardware information only. Approval of this submittal will take precedence over architectural drawings and specifications.
3. We will issue templates upon request and only after we have received an approved submittal.
4. We will not be held responsible for factory delays. All hardware will be ordered promptly after receipt of a completely approved submittal with all questions responded to.
5. All changes made after we receive an approved submittal will be treated as extra to contract. All excess material will be turned over as attic stock.
6. We assume no responsibility for matching new hardware to existing conditions and field measuring doors, frames and walls unless specifically stated in our proposal and your purchase order.
7. All modifications to existing doors and frames to suit new hardware will be done by others.
8. All wood doors and frames must be properly supported and reinforced to accommodate the specified hardware.
9. Thin slab floor closers must be set in the floor before installation of frames.
10. All thresholds must be cut and coped in the field by others.
11. All items are subject to standard manufacturer's warranties.
12. Storage of wood doors to be as follows:
    a. Wood doors are to be stored flat on a level surface in a dry, well ventilated building. Cover to keep clean to allow circulation.
    b. Wood doors should not be subjected to: abnormal heat, extreme dryness, humid conditions or sudden changes herein.
    c. Shrinkage or swelling of doors must be allowed to "climatize" for one (1) year as per manufacturer's warranty.

HANDING OF DOORS AND HARDWARE

The "outside" is the "key side" of the opening

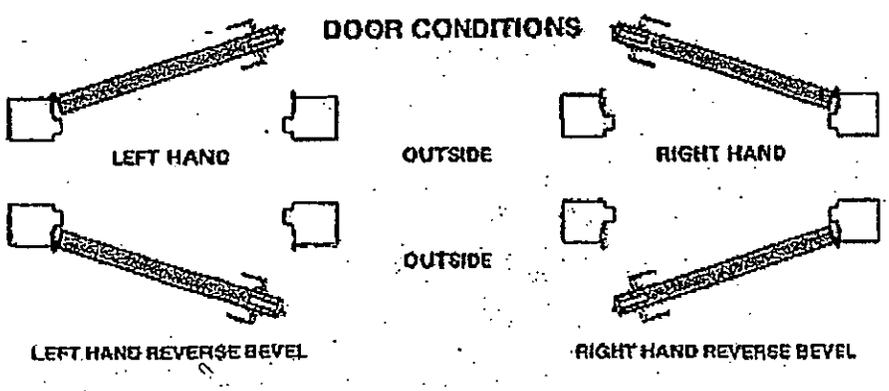

KEYING

MASTERKEYING OF ALL LOCKSETS AND CYLINDERS IS TO BE DONE EITHER IN OUR SHOP OR BY THE MANUFACTURER OF THE SPECIFIED PRODUCT, UNLESS SPECIFICALLY STATED OTHERWISE IN OUR PROPOSAL. WHEN APPROVING THIS SHOP DRAWING, PLEASE BE SURE TO PROVIDE US WITH ALL NECESSARY KEYING INFORMATION SO THAT ORDER OF THE HARDWARE WILL NOT BE DELAYED.

IF THERE IS NOT AN EXISTING MASTERKEY SYSTEM IN PLACE, PLEASE ADVISE HOW TO SET UP THE NEW SYSTEM.

IF THERE IS AN EXISTING MASTERKEY SYSTEM IN PLACE, IT MUST BE COMPATIBLE WITH THE SPECIFIED LOCKSET AND CYLINDER. WE WILL NEED TO KNOW WHAT KEYWAY IS ALREADY IN PLACE SO THAT WE CAN ORDER THE LOCKSETS IMMEDIATELY UPON RECEIPT OF THIS APPROVED SHOP DRAWING. COPIES OF ALL EXISTING MASTERKEYS AS WELL AS SPECIFIC KEYING INSTRUCTIONS MUST BE PROVIDED TO US SO THAT WE CAN MASTERKEY THE NEW LOCKSETS AND CYLINDERS INTO THE EXISTING SYSTEM. ALL WORK WILL BE DONE IN OUR SHOP.

PLEASE ADVISE THE FOLLOWING INFORMATION:

TENANT FACILITIES MANAGER'S NAME AND PHONE NUMBER
BUILDING MANAGER'S NAME AND PHONE NUMBER

UNLESS OTHERWISE STATED IN THE BID DOCUMENTS, WE WILL FURNISH THE FOLLOWING QUANTITIES OF KEYS WHICH IS THE MANUFACTURER'S STANDARD:

2 CHANGE KEYS FOR EACH LOCKSET
2 MASTERKEYS

IF RESTRICTED KEYWAYS, REMOVABLE CORE CYLINDERS, OR ANY SPECIAL TYPE OF CYLINDERS OR KEYS ARE DESIRED AND ARE NOT SPECIFIED IN THE BID DOCUMENTS, PLEASE ADVISE AND WE WILL WORK WITH YOU TO PROVIDE ALL APPROPRIATE INFORMATION AND ADDITIONAL COSTS.

ABSENT SPECIFIC DIRECTION IN THE BID DOCUMENTS, NO CREDIT WILL BE GIVEN IF THE CYLINDERS ARE TO BE KEYED OR PROVIDED BY OTHERS AND THE COST OF SUCH WORK WILL BE THE RESPONSIBILITY OF THE OWNER.

IF YOU HAVE ANY QUESTIONS REGARDING MASTERKEYING, PLEASE CONTACT OUR PROJECT MANAGER IMMEDIATELY.

FAILURE TO RESPOND TO THE INFORMATION REQUESTED ON THIS PAGE WILL DELAY THE HARDWARE ORDER.

MANUFACTURERS USED LIST
PORT AUTHORITY BUS TERMINAL
SOUTH WING EMERGENCY STAIR REPAIR

CODE	MANUFACTURERS NAME
CR	CORBIN RUSSWIN
IV	H.B IVES USA
LC	LCN USA
MC	MCKINNEY USA
MS	MISCELLANEOUS
PE	PEMKO USA
RW	ROCKWOOD MANUFACTURING
VO	VON DUPRIN USA

FINISHES USED LIST
PORT AUTHORITY BUS TERMINAL
SOUTH WING EMERGENCY STAIR REPAIR

FINISH	FINISH DESCRIPTION
626	SATIN CHROMIUM PLATED
GREY	GREY
AL	ALUMINUM
32D	SATIN STAINLESS STEEL
US32D	STAINLESS STEEL, DULL
US26D	CHROMIUM PLATED, DULL

PORT AUTHORITY BUS TERMINAL
SOUTH WING EMERGENCY STAIR REPAIR

Heading # 1

1 Sgl Door A01 STAIR A To ROOM	LH
1 Sgl Door B01 STAIR B To ROOM	LH
1 Sgl Door D01 STAIR D To ROOM	RH
1 Sgl Door E01 STAIR E To ROOM	RH

2'6" X 7'0" X 1 3/4" - HM DOOR X HM FRAME
DOOR TYPE (FLUSH)
FRAME DETAILS J1/H1
3/4" U.C.
HARDWARE SET 1

12	Hinges	TA314 4 1/2 X 4 1/2		32D	MC
2	Lockset	ML2057 GRD LC (A01,B01)	LH	626	CR
2	Lockset	ML2057 GRD LC (D01,E01)	RH	626	CR
4	Closer	4041 REG/PA		AL	LC
12	Silencers	20		GREY	IV

PERMANENT CYLINDERS FURNISHED & KEYED BY THE PORT AUTHORITY.

CLOSERS TO BE MOUNTED ON PULL SIDE.

LOCKS & FUNCTIONS REVISED TO MATCH P.A. STANDARD PER RESPONSE TO RFI DATED 1/5/10.

LOCATIONS & HANDING OF DOORS VERIFIED PER APPROVED SCHEDULE DATED 6/9 FOR THIS AND ALL SUBSEQUENT HEADINGS.

SPECIFICATION OF LOCKS VERIFIED PER APPROVED SCHEDULE DATED 6/9 FOR THIS AND ALL SUBSEQUENT HEADINGS.

TEMPORARY CORES TO BE FURNISHED BY OTHERS PER APPROVED SCHEDULE FOR THIS

AND ALL SUBSEQUENT HEADINGS.

PORT AUTHORITY BUS TERMINAL
SOUTH WING EMERGENCY STAIR REPAIR

Heading # 2
1 Sgl Door A02 STAIR A To 7TH FLOOR RH
1 Sgl Door B02 STAIR B To 7TH FLOOR RH

EXISTING X EXISTING
SWEEP DETAIL 2/A015
HARDWARE SET #2

2	Door Sweep	345 ANB-45"	PE
2	Threshold	272 A X 45"	PE

BALANCE OF HARDWARE EXISTING TO REMAIN.

Heading # 2A
1 Sgl Door C01 STAIR C From 7TH FLOOR RHR
1 Sgl Door D02 STAIR D To 7TH FLOOR LH
1 Sgl Door E02 STAIR E To 7TH FLOOR LH

EXISTING X EXISTING
SWEEP DETAIL 2/A015
HARDWARE SET #2

3	Door Sweep	345 ANB-44"	PE
3	Threshold	272 A X 44"	PE

BALANCE OF HARDWARE EXISTING TO REMAIN.

PORT AUTHORITY BUS TERMINAL
SOUTH WING EMERGENCY STAIR REPAIR

Heading # 3
1 Sgl Door 45SW2SR STAIR R From 2ND FLOOR LHR

3'4" X 7'0" X 1 3/4" - EXISTING X EXISTING
3 HR "A" LABEL
3/4" U.C.
HARDWARE SET #3

3	Hinges	TA314 4 1/2 X 4 1/2		32D	MC
1	Fire Exit Device	8875L-F 03 (45SW2SR)	LHR	US26D	VO
1	Magnetic Lock	TBD			MS
1	Magnetic Holder	TBD			MS
1	Closer	4041 REG/PA		AL	LC
1	Kickplate	K1062 8" X 38"		US32D	RW

CLOSER TO BE MOUNTED ON PULL SIDE.

PERMANENT CYLINDERS FURNISHED & KEYED BY THE PORT AUTHORITY.

DOOR TO BE EXISTING PER REVISED DRAWINGS DATED 9/24/09.

"F" SUFFIX ADDED TO EXIT DEVICE PER APPROVED SCHEDULE DATED 6/9.

SPECIFICATION OF EXIT DEVICE REVISED PER APPROVED SCHEDULE DATED 6/9.

PULL DELETED DUE TO REVISED SPECIFICATION OF EXIT DEVICE.

HEIGHT OF KICKPLATE ADVISED PER APPROVED SCHEDULE DATED 6/9.

RX SWITCH ADDED TO EXIT DEVICE PER APPROVED SCHEDULE DATED 6/9.

PORT AUTHORITY BUS TERMINAL
SOUTH WING EMERGENCY STAIR REPAIR

ELECTRIC HINGE ADDED TO PROVIDE POWER TO RX SWITCH IN EXIT DEVICE.

HINGES REVISED TO SUIT EXISTING CONDITIONS.

LEVER DESIGN ADVISED PER APPROVED SCHEDULE.

SPECIFICATION OF EXIT DEVICE REVISED TO MATCH EXISTING PER RESPONSE TO RFI DATED 1/5/10.

RX SWITCH, ELECTRIC HINGE DELETED PER RESPONSE PER RFI DATED 1/5/10.

ARCHITECT NOTE:

1. PLEASE ADVISE SPECIFICATION OF MAGNETIC LOCK & MAGNETIC HOLDER.

PORT AUTHORITY BUS TERMINAL
SOUTH WING EMERGENCY STAIR REPAIR

Heading # 4
1 Sgl Door 46ASW3SR STAIR R From 3RD FLOOR RHR

3'4" X 7'0" X 1 3/4" - EXISTING X EXISTING
3 HR "A" LABEL
3/4" U.C.

ALL HARDWARE EXISTING TO REMAIN.

DOOR & HARDWARE EXISTING TO REMAIN PER

REVISED DRAWINGS DATED 9/24.

Heading # 5
1 Sgl Door 46SW3SR AREA From AREA RHR

OPENING DELETED PER REVISED DRAWINGS

DATED 9/24.

WEINSTEIN & HOLTZMAN
HARDWARE GROUP - SINCE 1920

DOORS AND FRAMES

WEINSTEIN & HOLTZMAN, INC.
29 PARK ROW
NEW YORK, NY 10038
PHONE (212) 233-4651
FAX (212) 571-5301

RECORD SUBMITTALS	
DATE	STATUS
ARCH. DRAWINGS DATE:	5/13/2008
WOOD DOORS BY:	N/A
FINISH HARDWARE BY:	W & H
DRAWN BY:	STACY MAKSON

DOOR HANDING

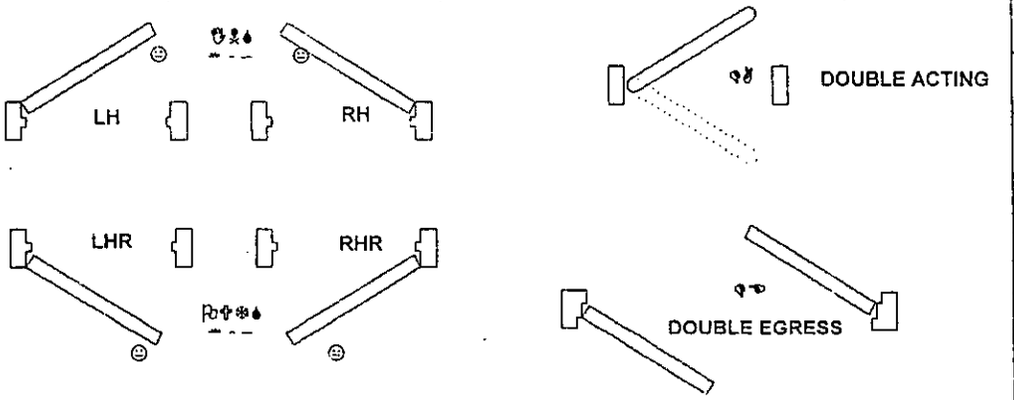

RECORD SUBMITTALS	
PROJECT NAME:	PORT AUTHORITY
LOCATION	WORK ORDER #12
ARCHITECT	SAN FANANDRE JUSTIN ARCHITECTS
CONTRACTOR	VRH
ARCHITECT	
PROJECT NUMBER	[illegible]

Gen[illegible] Notes:

1 Material shown on these drawings will be fabricated only after formal approval by the architect and contractor, receipt of an approved hardware schedule and all hardware templates (if necessary).

2 Doors and frames will be reinforced for surface mounted hardware as required. Drilling and tapping for the application of surface mounted hardware by others. Doors and frames will be prepared and reinforced for mortise hardware. Holes for this hardware will be drilled and tapped at the factory except for trim mounting holes, or where directed for field preparation by template. Surface exit cylinder and thumb piece holes factory drilled only when ordered. Anchor hinges will **not** be drilled and tapped on either the door or frame.

3 All doors and frames will receive an iron phosphate treatment and one (1) coat of baked on primer except for Galvaneal doors and frames.

4 Installation and furnishing of all glass and glazing by others.

5 All doors, frames and hardware will be tagged as indicated herein and must be installed in strict accordance with such.

6 All frames will be prepared for push type silencers; (3) per strike jamb for single doors and (2) per head for double doors.

7 All frames shall be die mitered, welded and ground smooth.

8 Storage for doors and frames at the building site should be under cover, placing units on minimum 4" wood sills or on the floor in a manner that prevents rust and damage. Avoid use of non-vented plastic or canvas shelter, which create a humidity chamber. If the wrapper on the door becomes wet, remove immediately. Provide ¼" space between doors to promote air circulation.

9 Frames in masonry construction to be filled with grout. When anti-freeze additives are added to the mortar, the insides of frames must be treated in the field by the general contractor with a bituminous asphalt material.

10 All welded frames are shipped with spreader bars to prevent damage to the frames in transit. The spreader bars **are not to be used to square the frame during installation** and as such, they are to be removed prior to setting the frame for installation.

11 **All information herein is based upon our interpretation of the drawings and must be verified and approved accordingly.** In general, where we have requested verification, a lack of response will be assumed a verification in the affirmative.

12 Please respond to all questions and open items herein so that fabrication may begin immediately upon receipt. Items not responded to will cause fabrication delays for the entire order.

TAG NUMBER	LOCATION	TO/ FROM	LOCATION	JAMB OPENING						WALL DATA		FRAME DATA					DOOR DATA									Heading	NOTES
				SWING		WIDTH		HEIGHT				PROF	GA	JAMB WIDTH	ANCHOR	ELEV.	MAT HM / WD	FACE	TYPE	EDGE	GA	THICK	UL	U/C		
					PR	FEET	INCHES	FEET	INCHES	THICK	TYPE															
A01	STAIR A	TO	ROOM	LH		2	6	7	0		EX	M	16	6	WPS	107	HM	F	747	N	18	1 3/4		3/4"	1	GALVANIZED (G90)
B01	STAIR B	TO	ROOM	LH		2	6	7	0		EX	M	16	6	WPS	107	HM	F	747	N	18	1 3/4		3/4"	1	GALVANIZED (G90)
D01	STAIR D	TO	ROOM	RH		2	6	7	0		EX	M	16	6	WPS	107	HM	F	747	N	18	1 3/4		3/4"	1	GALVANIZED (G90)
E01	STAIR E	TO	ROOM	RH		2	6	7	0		EX	M	16	6	WPS	107	HM	F	747	N	18	1 3/4		3/4"	1	GALVANIZED (G90)
45SW2SR												EXISTING X EXISTING														
46ASW3SR												EXISTING X EXISTING														
46SW3SR												EXISTING X EXISTING														

Weinstein and Holtzman, Inc.
29 Park Row
New York, NY 10038
Phone (212) 233-4651 Fax (212) 571-5301

Job Number:

Sheet _____ of _____

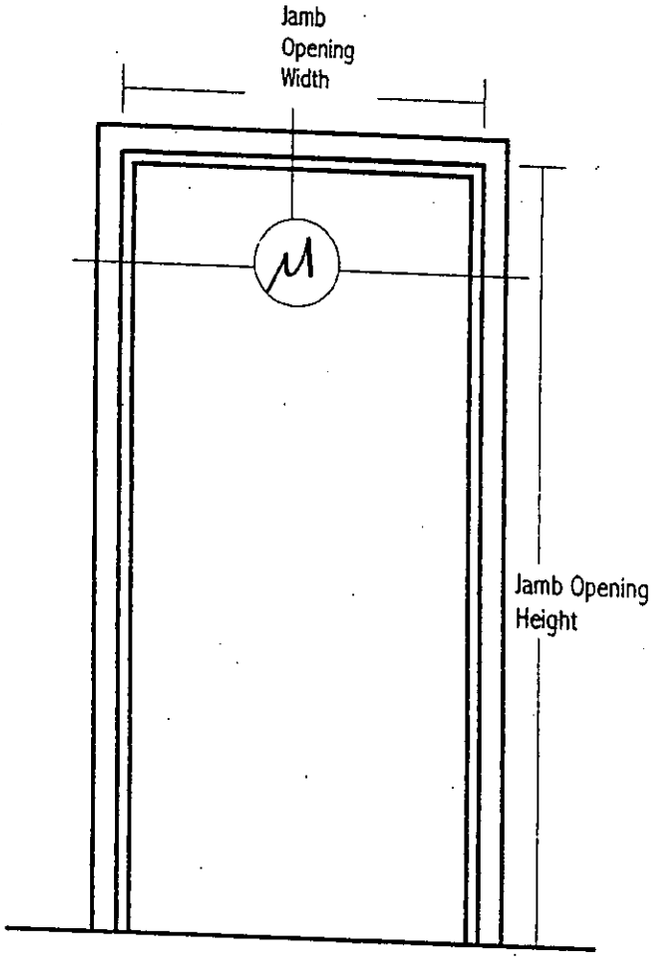

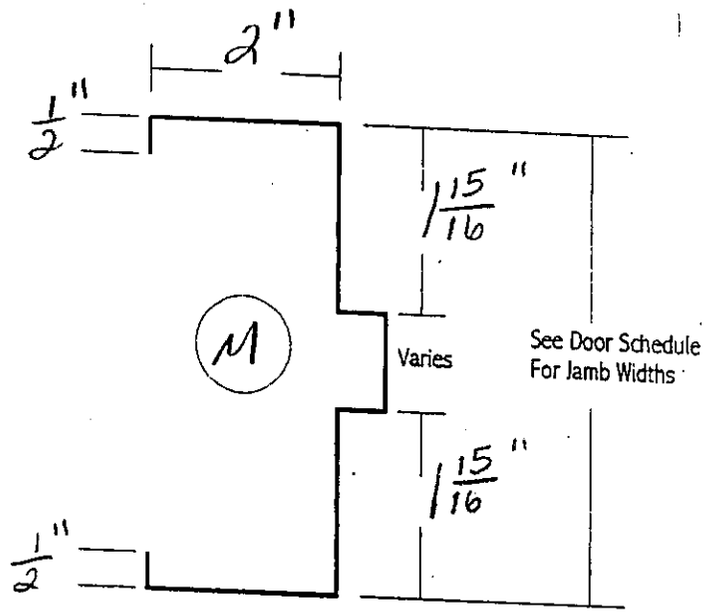

M - continuously welded
(WPS Anchors)

Weinstein & Holtzman, Inc. 29 Park Row New York, N.Y. 10038 Phone (212) 233-4651 Fax (212) 571-5301	W & H Project Number	Project Name	Elevation 107 Page of

Pipe Spacer Anchor

CURRIES®

FRAME TECHNICAL DATA

April 1, 2002

Ⓛ

ANCHOR PART NUMBER: P0044
ORDER CODE LOOSE: PS
ORDER CODE WELDED: WPS

NOTE: FACE DIMENSION FOR PROFILE MUST BE EQUAL

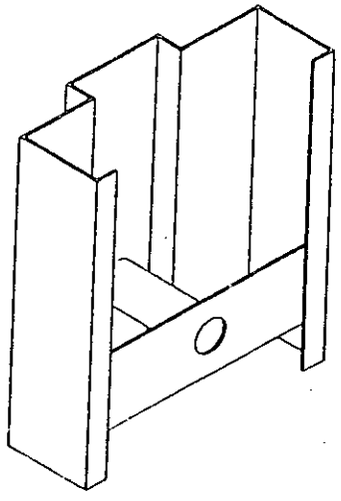

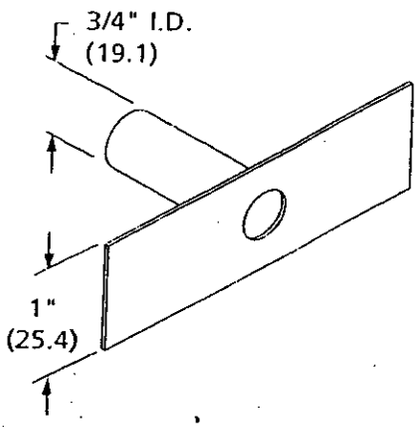

DIAMETER 3/8" (9.5) X 1-3/4" (44.5)
EMBEDMENT LENGTH OR STEEL
EXPANSION SHELL OR 3/8" (9.5)
FLATHEAD BOLT

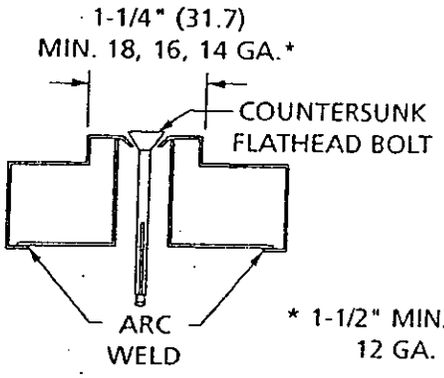

* 1-1/2" MIN. FOR 12 GA.

Spacing Bracket Anchor

Ⓛ

ANCHOR PART NUMBER: P0146
ORDER CODE LOOSE: SB
ORDER CODE WELDED: WSB

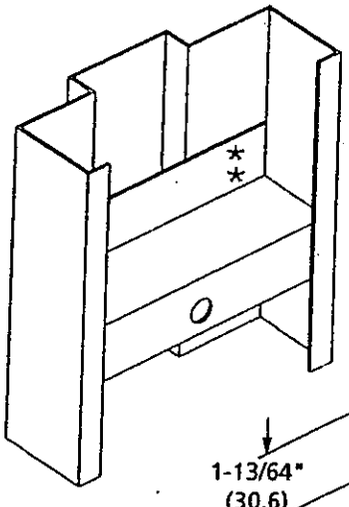

DIAMETER 3/8" (9.5) X 1-3/4" (44.5)
EMBEDMENT LENGTH OR STEEL
EXPANSION SHELL OR 3/8" (9.5)
FLATHEAD BOLT

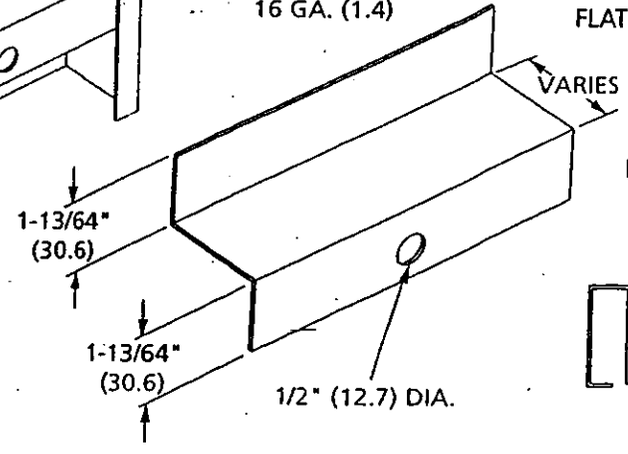

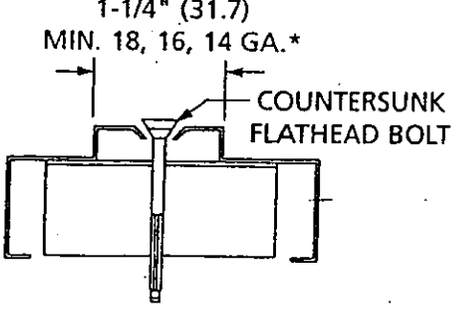

* 1-1/2" MIN. FOR 12 GA.

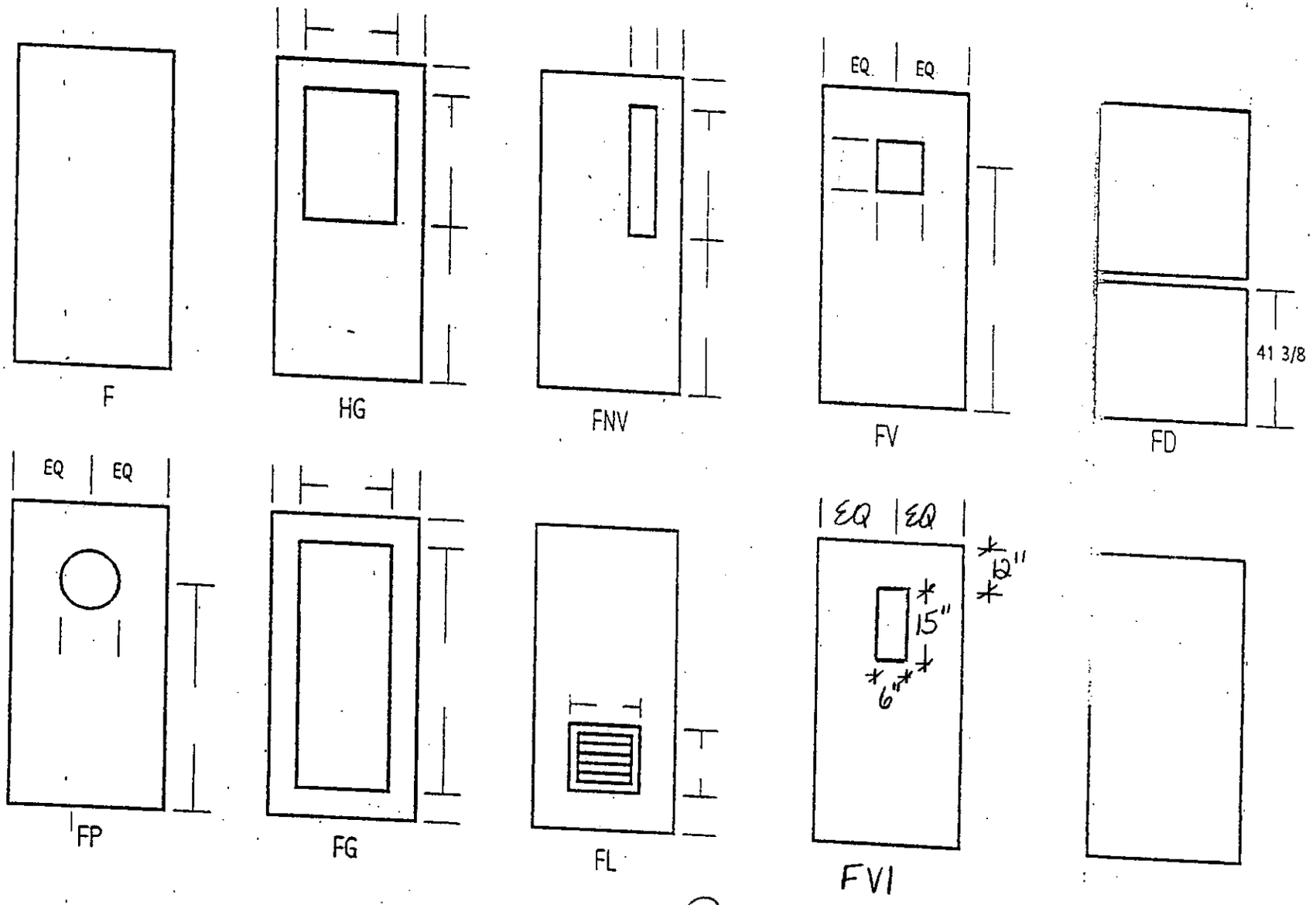

① VISION KIT – TYPE 3.
② ½" THICK GLASS (BY OTHERS)

Weinstein & Holtzman, Inc.
29 Park Row
New York, N.Y. 10038
Phone (212) 233-4651 Fax (212) 571-5301

W & H Project Number

Project Name

Door Types

Page of

2" DOOR

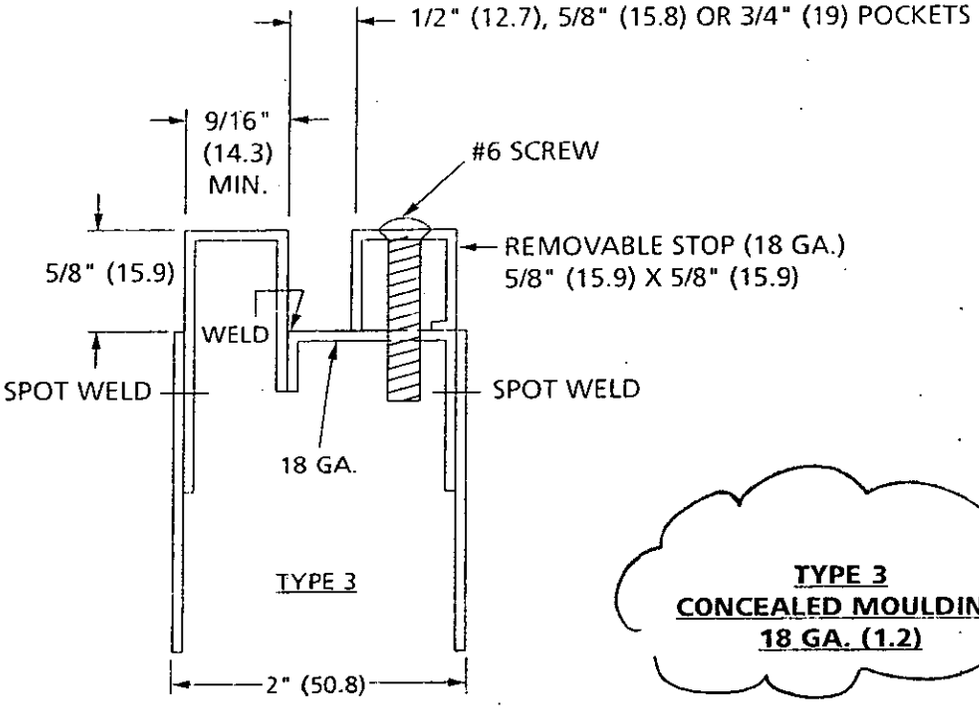

TYPE 3
CONCEALED MOULDING
18 GA. (1.2)

NOTE: REMOVABLE MOULDING IS TO BE ON INTERIOR SIDE OF DOOR UNLESS NOTED DIFFERENTLY ON THE ORDER

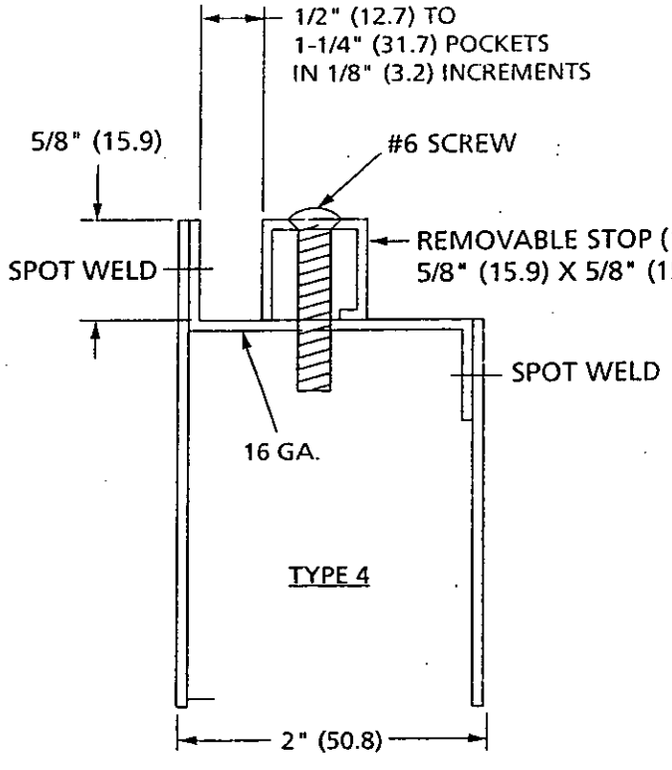

TYPE 4
CONCEALED MOULDING
WIDE POCKET
18 GA. (1.2)

747 Series

Specifications

Doors shall be 747 type as manufactured by Curries Mfg. Inc., Mason City, Iowa. Doors are to be manufactured of the finest quality 14, 16, 18 (specify gauge) cold rolled stretcher leveled steel. All doors shall be of full flush construction and shall have continuous one piece 20 gauge vertical steel rib stiffeners spaced not to exceed six (6) inches apart. Lock rail to be one (1) piece full height 14 gauge channel. Hinge rail to be one (1) piece full height 12 gauge channel formed and tapped for hinges. Both channels to be continuously arc welded to face sheets full height. All spaces between ribs shall be insulated with fiberglass insulation. Both top and bottom of doors are to receive 16 gauge closure channels. Doors shall be beveled either (⅛" in 2") lock edge. Minimum hardware reinforcements shall be as follows: Closures—12 gauge channel (5" x 16"), Overhead Holders - 12 gauge channel (5" x 24"), Rim Panics - 14" gauge channel (5" x 18"), Butts and Locks as previously specified herein, Checks and Pivots - 7 gauge x template requirements.

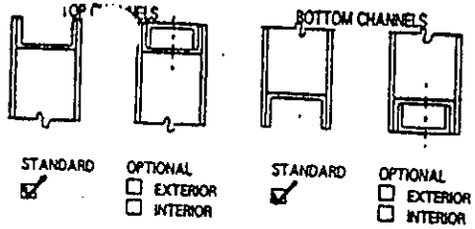

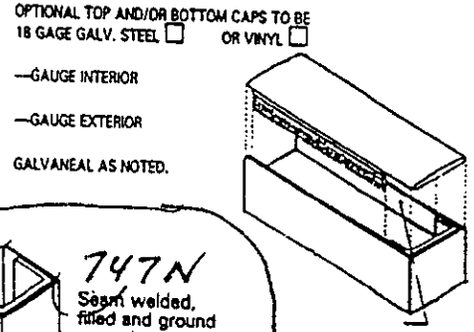

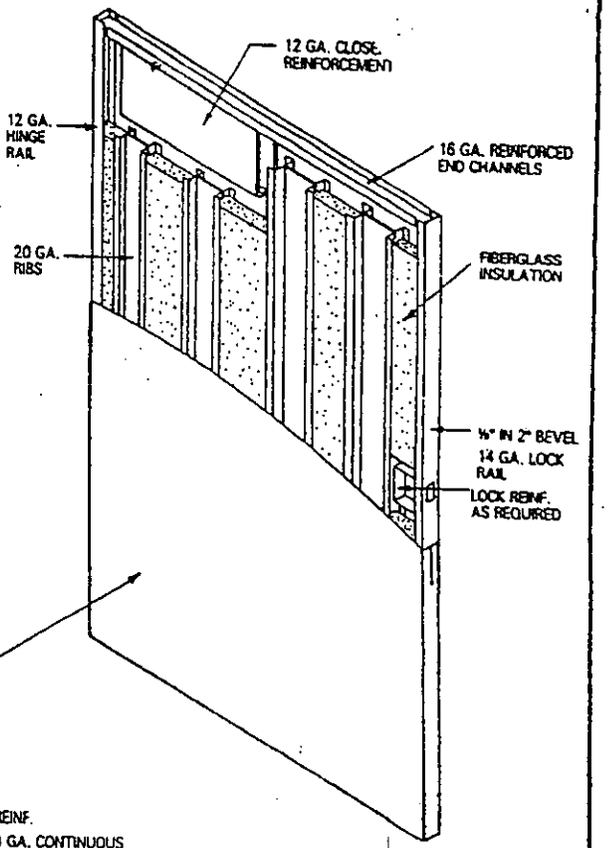

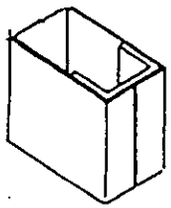

747S
Exposed hairline seam on center of door edge

747T
Seam wire welded full length and ground smooth

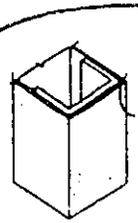

747N
Seam welded, filled and ground smooth

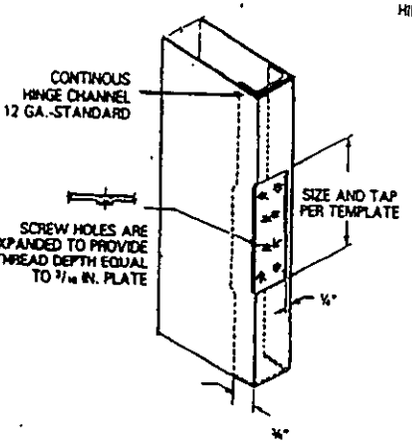

747 SERIES HINGE CHANNEL REINFORCING

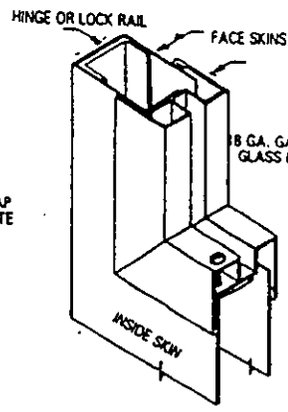

STANDARD GLASS MOLDING

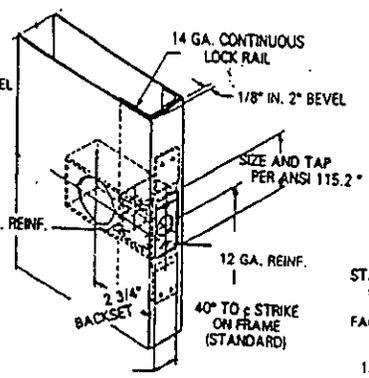

GOVT. 161 CYLINDRICAL LOCK REINFORCEMENT

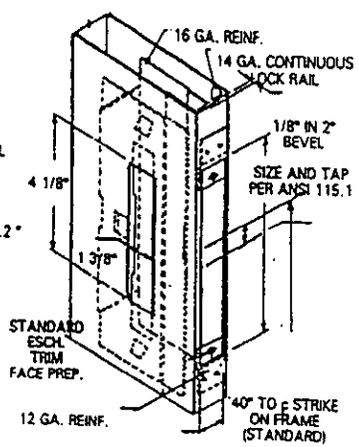

GOVT. 86 MORTISE LOCK REINFORCEMENT

NOTE: ASTRAGALS SUPPLIED BY HOLLOW METAL
ONLY IF NOTED IN ASTRAGAL COLUMN SPECIFY F OR Z TYPE

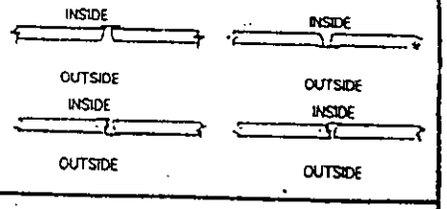

JOB NO.	PROJECT	LOCATION	SHEET NO. OF

CURRIES/ESSEX

C-016

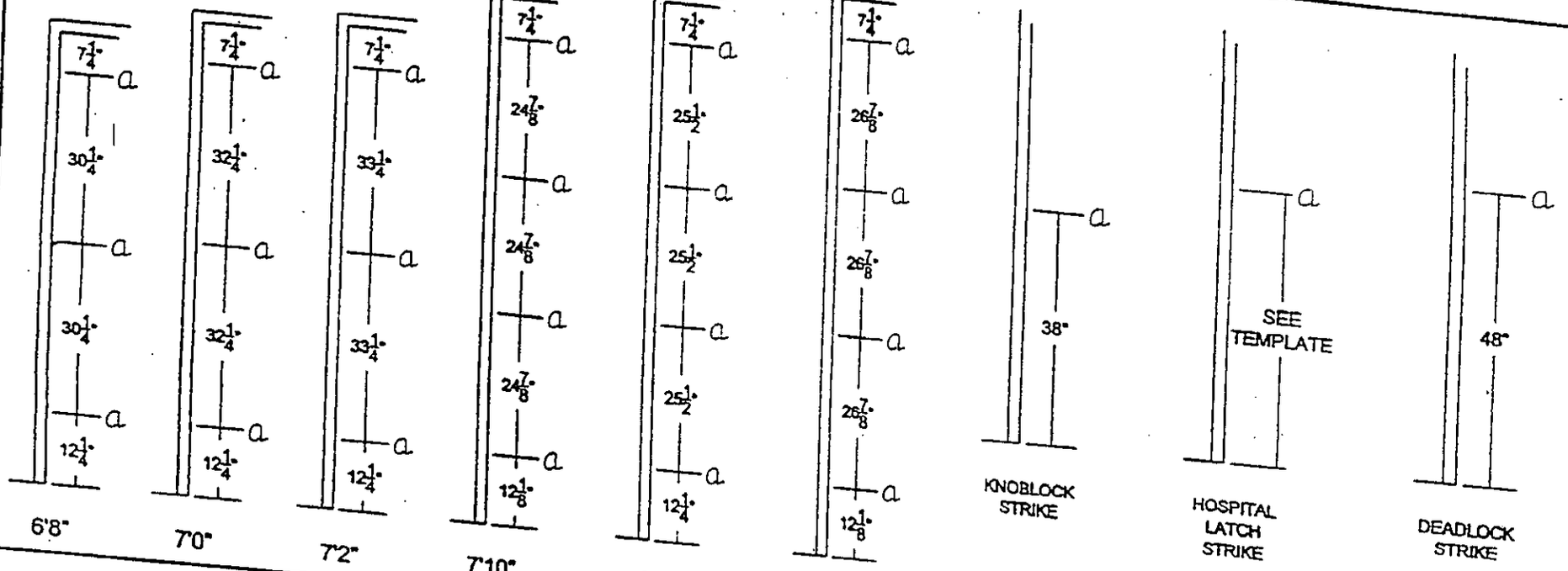

STANDARD LOCATIONS FOR 1 3/4" DOORS

THREE HINGES

SIZE	A	B	C	D
6'8"	7 1/8	30 1/4	11 5/8	37 3/8
7'0"	7 1/8	32 1/4	11 5/8	37 3/8
7'2"	7 1/8	33 1/4	11 5/8	37 3/8

HINGE BACKSET 1/4"

1/8" HEAD CLEARANCE

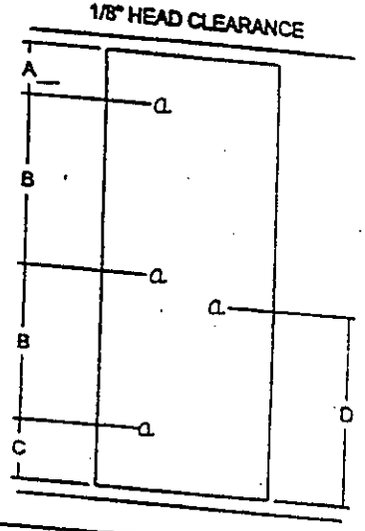

STANDARD LOCATIONS FOR 1 3/4" DOORS

FOUR HINGES

SIZE	A	B	C	D
7'10"	7 1/8	24 7/8	11 1/2	37 3/8
8'0"	7 1/8	25 1/2	11 5/8	37 3/8
8'4"	7 1/8	26 7/8	11 1/2	37 3/8

HINGE BACKSET 1/4"

1/8" HEAD CLEARANCE

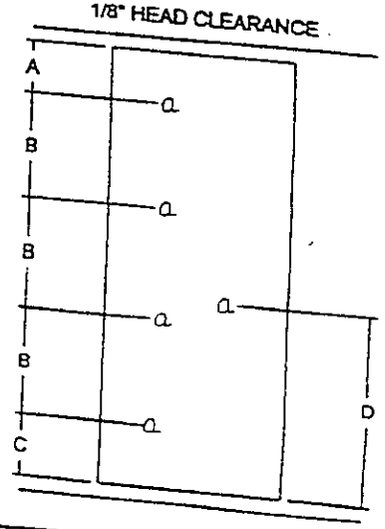

Weinstein & Holtzman, Inc.
29 Park Row
New York, NY 10038
Phone (212) 233-4651 Fax (212) 571-5301
WWW.DOORSFRAMESANDHARDWARE.COM

W & H PROJECT NUMBER:

PROJECT NAME:

HDW LOCATIONS

BACK

THE PORT AUTHORITY OF NY & NJ

2 Gateway Center
Newark, NJ 07102
Phone: 973-792-4629

TRANSMITTAL

No. 00046

PROJECT: WO12 South Wing Emerg. Stair Repairs **DATE:** 11/16/2009

TO: VRH Construction Corp.
c/o Port Authority of NY & NJ
625 Eight Ave. 2nd Flr. North Bldg
New York, NY 10018

Contract No: PABT-200,200 WO12

ATTN: **Anthony Carnabuci**

WE ARE SENDING:	STATUS LEGEND:		SUBMITTED FOR:
☐ Shop Drawings	Approved (APP)	New Item (NEW)	☐ Approval
☐ Letter	Approved as Corrected (AAC)	Not Approved (NA)	☐ Your Use
☐ Prints	Approved as Noted (AAN)	Not Reviewed (NR)	☑ As Requested
☐ Change Order	For Record Only (FRO)	Review With Comments (RWC)	☐ Review and Comment
☐ Plans	For Your Information (FYI)	Review With No Comments (RWNC)	
☐ Samples	Incomplete (INC)	Superseded (SUPS)	
☐ Specifications	SENT VIA:		DUE DATE:
☑ Other: Made from Submittal	☑ Attached ☐ Separate Cover Via: Mail		

PACKAGE	SUBMITTAL	DWG. #	REV.	COPIES	DATE	DESCRIPTION	STATUS
16190	16190-0001		R001	2	11/16/2009	Dwg: Title: Channel Desc: Channel	AAC
16190	16190-0002		R001	2	11/16/2009	Dwg: Title: Pipe Clamps Desc: Pipe Clamps	AAC
16190	16190-0003		R001	2	11/16/2009	Dwg: Title: Spring Nuts Desc: Spring Nuts	AAC
16190	16190-0004		R001	2	11/16/2009	Dwg: Title: Machine Screws Desc: Machine Screws	APP
16190	16190-0005		R001	2	11/16/2009	Dwg: Title: Sheet Metal Screws Desc: Sheet Metal Screws	APP
16190	16190-0006		R001	2	11/16/2009	Dwg: Title: Stud Bolt Anchors Desc: Stud Bolt Anchors	APP
16190	16190-0007		R001	2	11/16/2009	Dwg: Title: Toggle Bolts Desc: Toggle Bolts	APP
16190	16190-0008		R001	2	11/16/2009	Dwg: Title: Double Expansion Anchors Desc: Double Expansion Anchors	APP
16190	16190-0009		R001	2	11/16/2009	Dwg: Title: Drop-In Anchors Desc: Drop-In Anchors	APP

THE PORT AUTHORITY OF NY & NJ

TRANSMITTAL

No. 00046

2 Gateway Center
Newark, NJ 07102
Phone: 973-792-4629

PROJECT: WO12 South Wing Emerg. Stair Repairs **DATE:** 11/16/2009

TO: VRH Construction Corp.
c/o Port Authority of NY & NJ
625 Eight Ave. 2nd Flr. North Bldg
New York, NY 10018

Contract No: PABT-200.200 WO12

ATTN: **Anthony Carnabuci**

WE ARE SENDING:	STATUS LEGEND:		SUBMITTED FOR:
☐ Shop Drawings	Approved (APP)	New Item (NEW)	☐ Approval
☐ Letter	Approved as Corrected (AAC)	Not Approved (NA)	☐ Your Use
☐ Prints	Approved as Noted (AAN)	Not Reviewed (NR)	☑ As Requested
☐ Change Order	For Record Only (FRO)	Review With Comments (RWC)	☐ Review and Comment
☐ Plans	For Your Information (FYI)	Review With No Comments (RWNC)	
☐ Samples	Incomplete (INC)	Superseded (SUPS)	
☐ Specifications	**SENT VIA:**		**DUE DATE:**
☑ Other: Made from Submittal	☑ Attached ☐ Separate Cover Via: Mail		

PACKAGE	SUBMITTAL	DWG. #	REV.	COPIES	DATE	DESCRIPTION	STATUS
16190	16190-0010		R001	2	11/16/2009	Dwg: Title: Threaded Rod Desc: Threaded Rod	AAC

Remarks:

Please note the comments/corrections made on some of the attached submittals.

( ) Please make necessary corrections as noted, if any. Place approval form on original of each approved drawing or cut, insert date of approval within same and return _____ prints each. IT IS REQUESTEDTHAT THESE PRINTS BE RETURNED TO US WITHIN 5 DAYS.

( ) CLEAR TRANSPARENCY REQUIRED
The Contract required that the Contractor shall furnish to the engineer one set of drawings, all clearly revised, completed and brought up-to-date showing all of the permanent equipment, materials and construction as actually used.

Your earliest attention to these items would be greatly appreciated so as to avoid delay in the progress of the job.

CC: S. Wondoloski (TMS Only), P. Salvatore (2 Copies), File (1 Copy)
Response to VRH Construction Corp. , Transmittal #00051

Very Truly Yours,
Signed: _____
Ka-Kei Chan

Contractor:	Total Electrical Construction Co., Inc.		
Date:	10/13/09		
Project:	WO#12 – South Wing Emergency Stair Repair		
Contract:	BT-200.200		
Item:	Channel		
Spec Section:	16190 – Supporting Devices		
Page:	16190-2		
Paragraph:	2.02		
Drawing No.:	-		
Submittal No.:	16190-01	**Rev:**	1
Approved By:	Michael Lipari		

Note:

For work inside stair halls only.
1" conduit is maximum size used.

THE PORT AUTHORITY OF NY & NJ

( ) APPROVED
⋈ APPROVED AS CORRECTED
( ) NOT APPROVED

16190-001
200.200 W.O. 12

APPROVAL IS ONLY FOR CONFORMANCE WITH THE DESIGN CONCEPT OF THE PROJECT AND COMPLIANCE WITH THE INFORMATION GIVEN IN THE CONTRACT DOCUMENTS. CONTRACTOR IS RESPONSIBLE FOR CONFORMING AND CORRELATING ALL DIMENSIONS AT THE JOB SITE FOR OPERATIONS THAT PERTAIN TO THE FABRICATION PROCESSES OR TO TECHNIQUES OF CONSTRUCTION AND FOR COORDINATION OF THE WORK OF ALL TRADES.

The Port Authority of NY & NJ
Engineering Department

Date: 11-12-09 By: Steve Wandolowski
Senior Structual Engineer

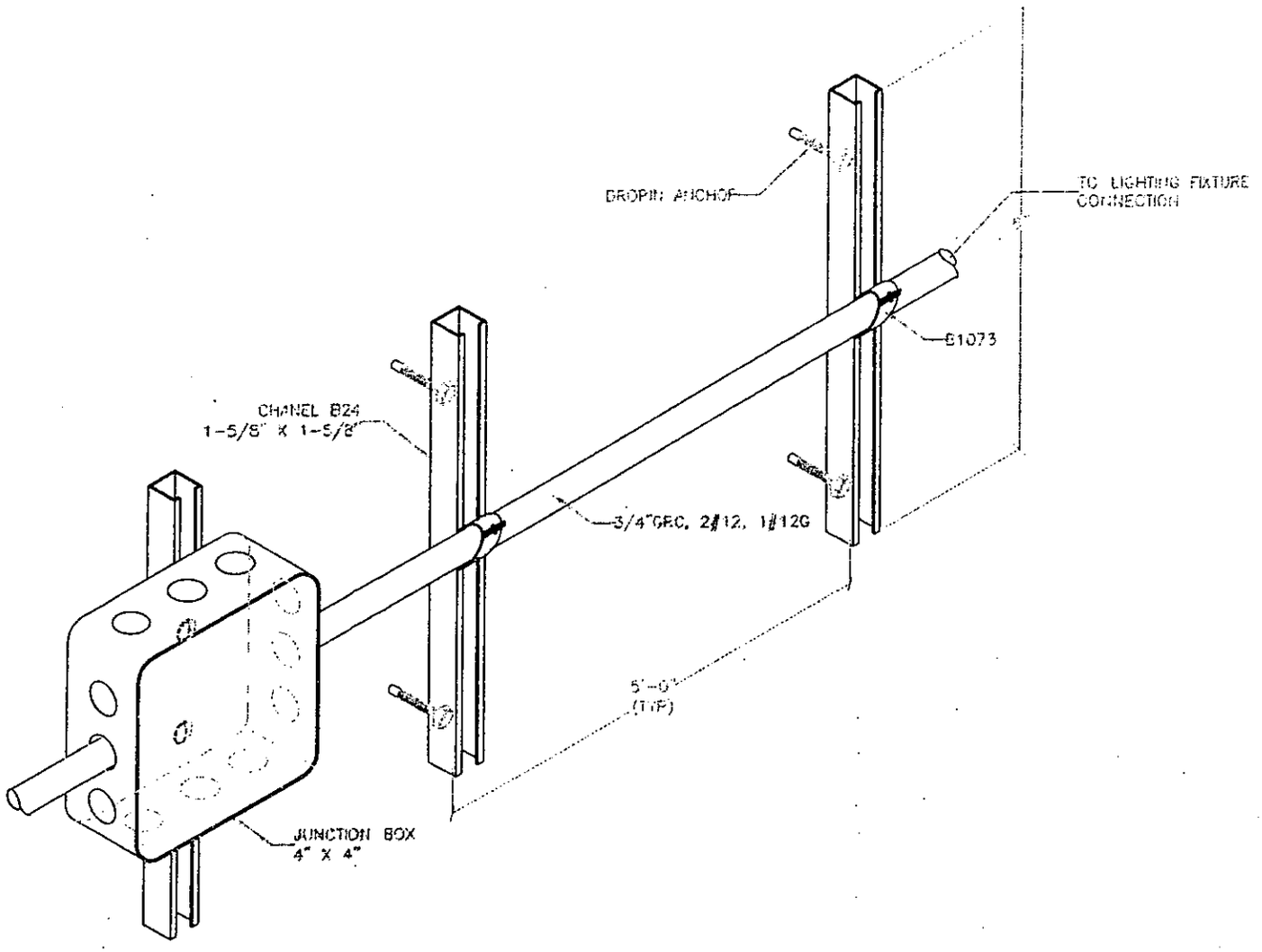

TOTAL ELECTRICAL
CONTRACTING CORPORATION
230 GREEN STREET
GREENPOINT, NY 11222

PROJECT NAME: WO #12 SOUTH WING EMERGENCY STAIR REPAIR			
TITLE: STAIRWAY CONDUIT SUPPORT			
DRAWN BY: I.A.	CHECKED BY: M.L.	DESIGN: M.S.	DWG NO. SKETCH
SCALE: N.T.S.	DATE: 09.24.09	SHEET 1 OF 1	REV

BL2R

STRUT SYSTEMS

ENGINEERING CATALOG

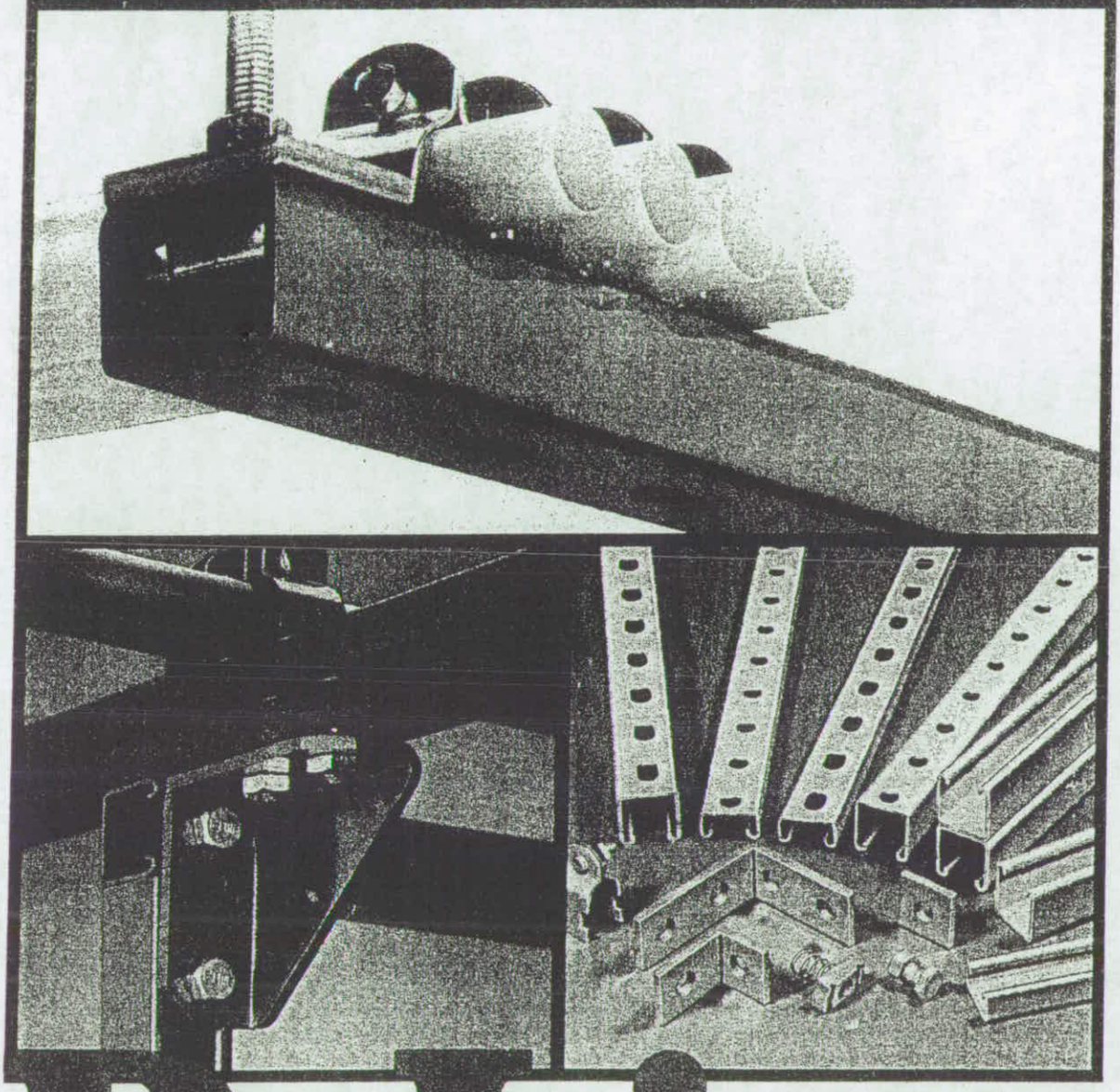

B-Line®

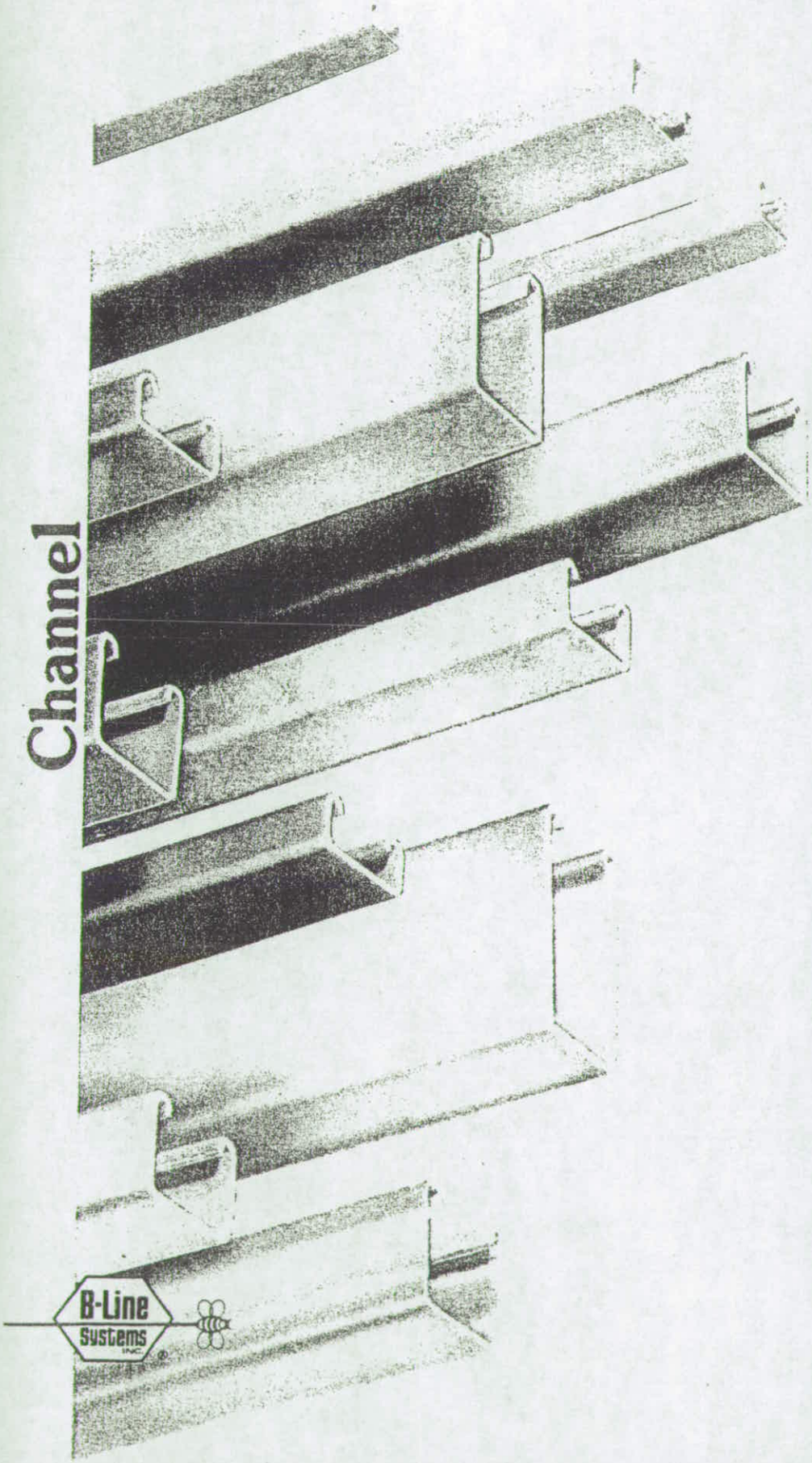

METAL FRAMING CHANNELS

Channel

B-Line's metal framing channel is cold formed on our modern rolling mills from 12 Ga. (2.6), 14 Ga. (1.9), and 16 Ga. (1.5) low carbon steel strips. A continuous slot with inturned lips provides the ability to make attachments at any point.

Materials

Steel: Plain

12 Ga. (2.6), 14 Ga. (1.9) and 16 Ga. (1.5) ASTM A570, Grade 33

Steel: Pre-galvanized
ASTM A446, Grade A.

Lengths

Standard lengths are 10' (3.05m) and 20' (6.09m) with length tolerance of +1/8" (+3.2mm). Custom lengths are available upon request.

Finishes

Standard finishes are: plain steel (oil coated); our exclusive Dura-Green epoxy paint (Federal Specification TT-C-490B) and pre-galvanized finish (ASTM A525 coating G90). Hot dip galvanized after fabrication (ASTM A123) and other custom coatings are available.

Welding

Weld spacing is maintained between 2 1/2 inches (63.5mm) and 3 inches (76.2mm) on center. Through high quality control testing of welded channels and continuous monitoring of welding equipment, B-Line provides the most consistent combination channels available today.

Lengths

Metric dimensions are shown in parentheses or in shaded areas of charts. Unless noted, all metric dimensions are in millimeters.

Recommended Bolted Metal Framing Specification

The bolted metal framing system shall be made of channel, fittings, and hardware as defined in the Metal Framing Manufacturers Association Standard Publication MFMA-1.

MATERIAL AND FINISHES

Aluminum

Aluminum channel and closure strips shall be extruded from Aluminum Association Alloy 6063-T6. Fabricated parts shall be made from Alloy 5052-H32.

Pre-Galvanized Steel

Pre-galvanized channel shall be made from steel in accordance with ASTM A446, Grade A and mill-galvanized in accordance with ASTM A525, Coating Designation G90.

Hot-Dip Galvanized After Fabrication Steel

Channels Hot-Dip Galvanized After Fabrication shall be made from steel meeting the minimum requirements of ASTM A570, Grade 33. Eighteen gauge (1.2 mm) and lighter channel shall be ASTM A611, Grade C steel. Channels shall be Hot-Dip Galvanized After Fabrication in accordance with ASTM A123. All 1/4" (6.3) fittings shall be formed from ASTM A635 steel and Hot-Dip Galvanized After Fabrication in accordance with ASTM A123.

Stainless Steel

Stainless Steel Channel and accessories shall be of AISI Type 304 or Type 316 Stainless Steel.

Green Epoxy

Painted channel shall meet the minimum mechanical properties of ASTM A570 Grade 33 steel and painted with electrodeposited, epoxy base dark green paint. All 1/4" (6.3) accessories shall be produced from ASTM A635 steel and painted with electrodeposited, epoxy base dark green paint.

Electro-Plated Zinc.

Electro-Plated Zinc finish on fittings and hardware shall be plated after fabrication in accordance with ASTM B633, SC3 or SC1 respectively.

Dimensions

Metal Framing Channel shall be cold formed from 12 Ga. (2.6), 14 Ga. (1.9), or 16 Ga. (1.5) steel. All channels shall have a nominal overall width of 1 5/8" (41.3) and have a 7/8" (22.2) slot face opening. Standard lengths are to be 10 (3.05m) and 20 (6.09m) foot. All testing and tolerancing shall be in accordance with the latest MFMA-1 Standard.

U-channel strut system shall be 12-gauge, hot-dipped galvanized steel. (Refer to PA Specification Section 16190).

..., channels shall be fabricated of ASTM A 36 steel (Refer to PA Specification, Section 16190).

CHANNEL

SELECTION CHART
for Channels, Materials and Hole Patterns

Channel Type	Channel Dimensions				Material & Thickness *				Channel Hole Pattern **				
	Height		Width		Steel	Alum.	Stainless Steel Type 304	Stainless Steel Type 316	SH	S	H1 7/8	TH	KO6
					1	2	3	4	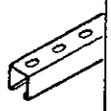	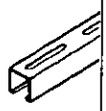	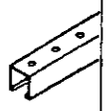	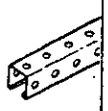	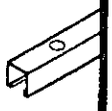
B11	3 1/4"	(82.5)	1 5/8"	(41.3)	12 Ga.	--	--	--	1	1	1	--	1
B12	2 7/16"	(61.9)	1 5/8"	(41.3)	12 Ga.	.105	--	--	1 2	1	1 2	--	1 2
B22	1 5/8"	(41.3)	1 5/8"	(41.3)	12 Ga.	.105	12 Ga.	12 Ga.	1 2 3	1	1 2 3	1	1 2
B24	1 5/8"	(41.3)	1 5/8"	(41.3)	14 Ga.	.080	14 Ga.	14 Ga.	1 2 3 4	1	1 2 3 4	--	1 2
B26	1 5/8"	(41.3)	1 5/8"	(41.3)	16 Ga.	--	--	--	1	1	1	--	1
B32	1 3/8"	(34.9)	1 5/8"	(41.3)	12 Ga.	--	12 Ga.	--	1 3	1	1 3	--	1
B42	1"	(25.4)	1 5/8"	(41.3)	12 Ga.	--	12 Ga.	--	1 3	1	1 3	--	1
B52	13/16"	(20.6)	1 5/8"	(41.3)	12 Ga.	--	12 Ga.	--	1 3	1	1 3	--	1
B54	13/16"	(20.6)	1 5/8"	(41.3)	14 Ga.	.080	14 Ga.	14 Ga.	1 2 3 4	1	1 2 3 4	--	1 2
B56	13/16"	(20.6)	1 5/8"	(41.3)	16 Ga.	--	--	--	1	1	1	--	1
B62	13/16"	(20.6)	13/16"	(20.6)	18 Ga.	--	--	--	--	--	--	--	--
B72	13/32"	(10.3)	13/16"	(20.6)	18 Ga.	--	--	--	--	--	--	--	--
E7016	3/4"	(19.0)	5/8"	(15.9)	16 Ga.	--	--	--	--	--	--	--	--

The selection has been prepared to provide a reference for available channel, materials and hole patterns. Material types available for various hole patterns are defined by numbers 1 thru 4.

Some stainless steel channels with hole patterns are available on special order only.

*Metric equivalent for thicknesses shown in chart.
12 Ga. = 2.6 mm
14 Ga. = 1.9 mm
16 Ga. = 1.5 mm
18 Ga. = 1.2 mm
.105 = 2.6 mm
.080 = 2.0 mm

** 1 - Steel
2 - Aluminum
3 - Type 304 Stainless Steel
4 - Type 316 Stainless Steel

Properties may vary due to commercial tolerances of the material.

B-LINE DURA-GREEN® EPOXY FINISH

Dura-Green is water borne epoxy resin paint permanently bonded to all metal surfaces by a cathodic electro-deposition process. There is no special ordering—it's standard.

This process deposits an organic epoxy finish on negatively charged metal parts immersed in tanks containing positively charged epoxy paint particles. There is total coverage, no excess buildup of paint, no flaking and no discoloration of the finish.

B-Line Systems INC

Size as Needed

CHANNEL HOLE PATTERN

B11SH THRU B56SH — SH TYPE CHANNEL

Part No.	Thickness		Height "H" In.	Height "H" mm.	Weight Lbs./Ft.	Weight kg/m
B11SH	12 Ga.	(2.6)	3¼"	(82.5)	2.97	(4.42)
B12SH	12 Ga.	(2.6)	2⁷⁄₁₆"	(61.9)	2.39	(3.55)
B22SH	12 Ga.	(2.6)	1⅝"	(41.3)	1.82	(2.71)
B24SH	14 Ga.	(1.9)	1⅝"	(41.3)	1.34	(1.99)
B26SH	16 Ga.	(1.5)	1⅝"	(41.3)	1.07	(1.59)
B32SH	12 Ga.	(2.6)	1⅜"	(34.9)	1.62	(2.41)
B42SH	12 Ga.	(2.6)	1"	(25.4)	1.36	(2.02)
B52SH	12 Ga.	(2.6)	¹³⁄₁₆"	(20.6)	1.19	(1.77)
B54SH	14 Ga.	(1.9)	¹³⁄₁₆"	(20.6)	.91	(1.35)
B56SH	16 Ga.	(1.5)	¹³⁄₁₆"	(20.6)	.80	(1.19)

For Beam Loads use 90% of Channel Loading Chart.

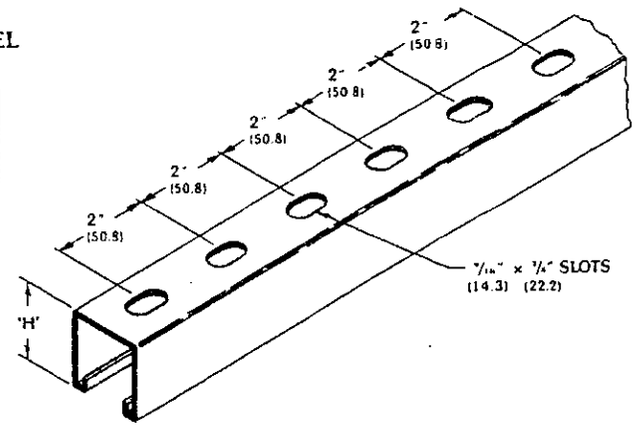

B11S THRU B56S — S TYPE CHANNEL

Part No.	Thickness		Height "H" In.	Height "H" mm.	Weight Lbs./Ft.	Weight kg/m
B11S	12 Ga.	(2.6)	3¼"	(82.5)	2.94	(4.37)
B12S	12 Ga.	(2.6)	2⁷⁄₁₆"	(61.9)	2.36	(3.51)
B22S	12 Ga.	(2.6)	1⅝"	(41.3)	1.79	(2.66)
B24S	14 Ga.	(1.9)	1⅝"	(41.3)	1.32	(1.96)
B26S	16 Ga.	(1.5)	1⅝"	(41.3)	1.06	(1.58)
B32S	12 Ga.	(2.6)	1⅜"	(34.9)	1.59	(2.36)
B42S	12 Ga.	(2.6)	1"	(25.4)	1.33	(1.98)
B52S	12 Ga.	(2.6)	¹³⁄₁₆"	(20.6)	1.16	(1.72)
B54S	14 Ga.	(1.9)	¹³⁄₁₆"	(20.6)	.89	(1.32)
B56S	16 Ga.	(1.5)	¹³⁄₁₆"	(20.6)	.79	(1.17)

For Beam Loads use 90% of Channel Loading Chart.

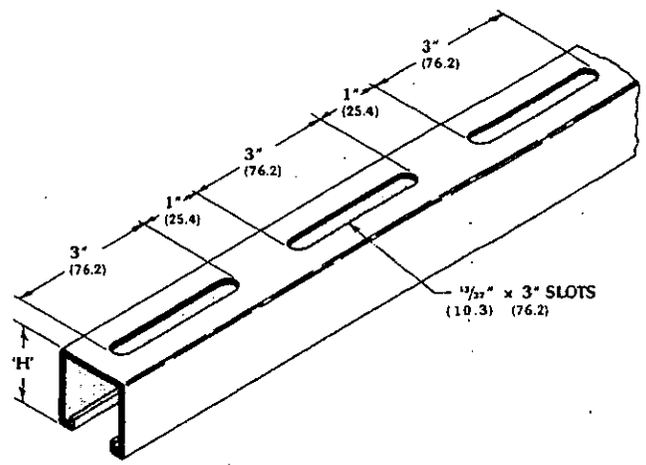

B11H-1 7/8 THRU B56H-1 7/8 — H-1 7/8 TYPE CHANNEL

Part No.	Thickness		Height "H" In.	Height "H" mm.	Weight Lbs./Ft.	Weight kg/m
B11H17/8	12 Ga.	(2.6)	3¼"	(82.5)	3.00	(4.46)
B12H17/8	12 Ga.	(2.6)	2⁷⁄₁₆"	(61.9)	2.42	(3.60)
B22H17/8	12 Ga.	(2.6)	1⅝"	(41.3)	1.85	(2.75)
B24H17/8	14 Ga.	(1.9)	1⅝"	(41.3)	1.36	(2.02)
B26H17/8	16 Ga.	(1.5)	1⅝"	(41.3)	1.09	(1.62)
B32H17/8	12 Ga.	(2.6)	1⅜"	(34.9)	1.65	(2.45)
B42H17/8	12 Ga.	(2.6)	1"	(25.4)	1.39	(2.07)
B52H17/8	12 Ga.	(2.6)	¹³⁄₁₆"	(20.6)	1.22	(1.81)
B54H17/8	14 Ga.	(1.9)	¹³⁄₁₆"	(20.6)	.93	(1.38)
B56H17/8	16 Ga.	(1.5)	¹³⁄₁₆"	(20.6)	.82	(1.22)

For Beam Loads use 90% of Channel Loading Chart.

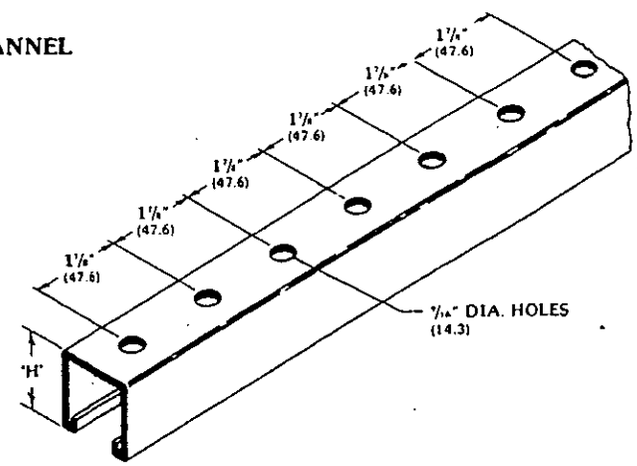

STANDARD FINISHES: Plain Steel (oil coated), Dura-Green or Pre-Galvanized.
STANDARD LENGTHS: 10' (3.05 m) & 20' (6.09 m)

Confirm that they mate and match with channel: 12-gauge, hot-dipped galvanized steel, ASTM A 36.

Contractor:	Total Electrical Construction Co., Inc.		
Date:	10/13/09		
Project:	WO#12 – South Wing Emergency Stair Repair		
Contract:	BT-200.200		
Item:	Pipe Clamps		
Spec Section:	16190 – Supporting Devices		
Page:	16190-2		
Paragraph:	2.02		
Drawing No.:	-		
Submittal No.:	16190-02	**Rev:**	1
Approved By:	Michael Lipari		

Note:

For work inside stair halls only.
1" conduit is maximum size used.

THE PORT AUTHORITY OF NY & NJ 16190-002

( ) APPROVED
(X) APPROVED AS CORRECTED
( ) NOT APPROVED

200.200 W.O. 12

APPROVAL IS ONLY FOR CONFORMANCE WITH THE DESIGN CONCEPT OF THE PROJECT AND COMPLIANCE WITH THE INFORMATION GIVEN IN THE CONTRACT DOCUMENTS. CONTRACTOR IS RESPONSIBLE FOR CONFORMING AND CORRELATING ALL DIMENSIONS AT THE JOB SITE FOR OPERATIONS THAT PERTAIN TO THE FABRICATION PROCESSES OR TO TECHNIQUES OF CONSTRUCTION AND FOR COORDINATION OF THE WORK OF ALL TRADES.

The Port Authority of NY & NJ
Engineering Department

Date: 11-12-09 By: Steve Wroblewski
Senior Structual Engineer

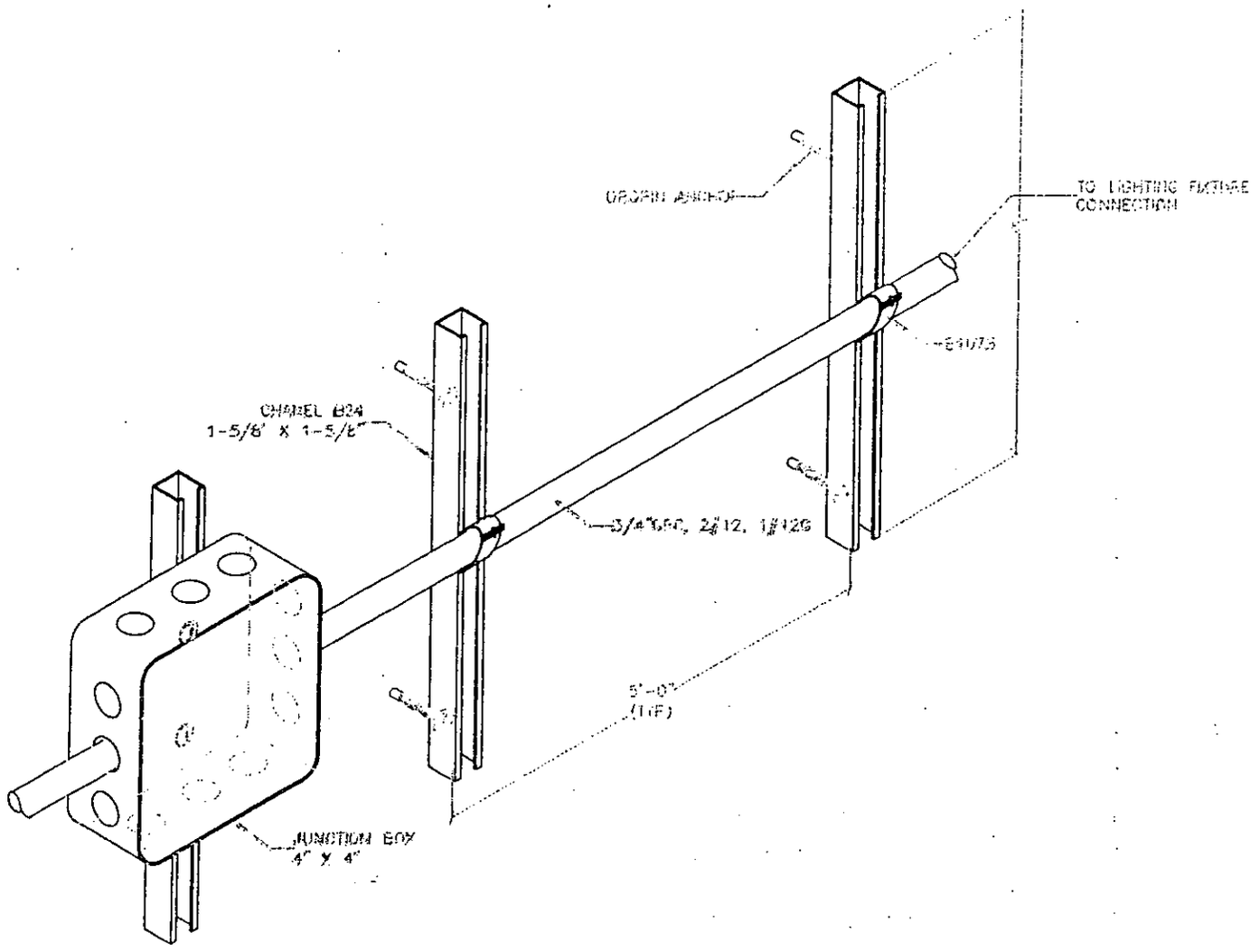

TOTAL ELECTRICAL
CONTRACTING CORPORATION
230 GREEN STREET
GREENPOINT, NY 11222

PROJECT NAME: WO #12 SOUTH WING EMERGENCY STAIR REPAIR			
TITLE: STAIRWAY CONDUIT SUPPORT			
DRAWN BY: I.A.	CHECKED BY: M.L.	DESIGN: M.S.	DWG NO. SKETCH
SCALE: N.T.S.	DATE: 09.24.09	SHEET 1 OF 1	REV

PIPE CLAMPS

size as Needed

Part No.	Use With EMT		Use With IP		'A'		'B'		'T'		Design Load* Lbs.	Design Load* kN	Wt./C Lbs.	Wt./C kg
B1071	3/8"	(10)	--	--	1 23/32"	(43.6)	19/32"	(15.1)	14 Ga.	(1.9)	300	(1.33)	9	(4.1)
B1072	1/2"	(15)	3/8"	(10)	1 27/32"	(46.8)	23/32"	(18.2)	14 Ga.	(1.9)	300	(1.33)	10	(4.5)
B1073	3/4"	(20)	1/2"	(15)	2 3/32"	(53.2)	15/16"	(23.8)	14 Ga.	(1.9)	400	(1.78)	11	(5.0)
B1074	1"	(25)	3/4"	(20)	2 3/8"	(60.3)	1 3/16"	(30.1)	14 Ga.	(1.9)	400	(1.78)	13	(5.9)
B1075	--	--	1"	(25)	2 9/16"	(65.1)	1 11/32"	(34.1)	14 Ga.	(1.9)	400	(1.78)	14	(6.3)
B1076	1 1/4"	(32)	--	--	2 25/32"	(70.6)	1 17/32"	(38.9)	14 Ga.	(1.9)	400	(1.78)	15	(6.8)
B1077	1 1/2"	(40)	1 1/4"	(32)	3 1/32"	(77.0)	1 3/4"	(44.4)	14 Ga.	(1.9)	400	(1.78)	17	(7.7)
B1078	--	--	1 1/2"	(40)	3 1/4"	(82.5)	1 15/16"	(49.2)	12 Ga.	(2.6)	600	(2.67)	26	(11.8)
B1079	2"	(50)	--	--	3 19/32"	(91.3)	2 7/32"	(56.3)	12 Ga.	(2.6)	600	(2.67)	28	(12.7)
B1080	--	--	2"	(50)	3 13/16"	(96.8)	2 13/32"	(61.1)	12 Ga.	(2.6)	600	(2.67)	30	(13.6)
B1081	2 1/2"	(65)	2 1/2"	(65)	4 3/8"	(111.1)	2 29/32"	(73.8)	12 Ga.	(2.6)	600	(2.67)	35	(15.9)
B1082	3"	(80)	3"	(80)	5 3/32"	(129.4)	3 17/32"	(89.7)	12 Ga.	(2.6)	600	(2.67)	41	(18.6)
B1083	3 1/2"	(90)	3 1/2"	(90)	5 23/32"	(145.2)	4 1/32"	(102.4)	11 Ga.	(3.0)	600	(2.67)	57	(25.8)
B1084	4"	(100)	4"	(100)	6 9/32"	(159.5)	4 17/32"	(115.1)	11 Ga.	(3.0)	600	(2.67)	63	(28.6)

* Vertical pull design load.

EMT - Thinwall Conduit
IP - Iron Pipe or Rigid Conduit

Includes Slotted Hex Head Machine Screw
For B1071 thru B1077 1/4"-20
For B1078 thru B1084 5/16"-18

MATERIAL:
12 Ga. (2.6) and 14 Ga. (1.9) ASTM A570 Grade 33
11 Ga. (3.0) ASTM A607 Grade 50

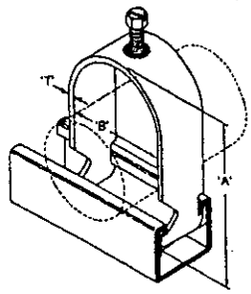

B1071 THRU B1084 ONE-PIECE PIPE CLAMP

Part No.	Use With EMT		Use With IP		Thickness		Design Load Lbs.	Design Load kN	Wt./C Lbs.	Wt./C kg
B1508*	1/2"	(15)	--	--	16 Ga.	(1.5)	200	(.89)	7.4	(3.4)
B1512*	3/4"	(20)	1/2"	(15)	16 Ga.	(1.5)	200	(.89)	8.0	(3.6)
B1516*	1"	(25)	3/4"	(20)	14 Ga.	(1.9)	300	(1.33)	11.0	(5.0)
B1520*	1 1/4"	(32)	1"	(25)	14 Ga.	(1.9)	300	(1.33)	12.5	(5.7)
B1508S	1/2"	(15)	--	--	16 Ga.	(1.5)	200	(.89)	8.6	(3.9)
B1512S	3/4"	(20)	1/2"	(15)	16 Ga.	(1.5)	200	(.89)	9.2	(4.2)
B1516S	1"	(25)	3/4"	(20)	14 Ga.	(1.9)	300	(1.33)	12.7	(5.8)
B1520S	1 1/4"	(32)	1"	(25)	14 Ga.	(1.9)	300	(1.33)	14.6	(6.6)
B1524S	1 1/2"	(40)	1 1/4"	(32)	12 Ga.	(2.6)	400	(1.78)	20.5	(9.3)
B1532S	2"	(50)	1 1/2"	(40)	12 Ga.	(2.6)	400	(1.78)	21.5	(9.8)
B1534S	--	--	2"	(50)	12 Ga.	(2.6)	400	(1.78)	22.7	(10.3)
B1540S	2 1/2"	(65)	2 1/2"	(65)	12 Ga.	(2.6)	400	(1.78)	26.0	(11.9)
B1548S	3"	(80)	3"	(80)	12 Ga.	(2.6)	400	(1.78)	30.2	(13.7)
B1556S	3 1/2"	(90)	3 1/2"	(90)	12 Ga.	(2.6)	400	(1.78)	33.3	(15.1)
B1564S	4"	(100)	4"	(100)	12 Ga.	(2.6)	400	(1.78)	36.6	(16.6)

* NOTE: Clamps without saddle not recommended for flexible conduit or cable.

B1508 thru B1520

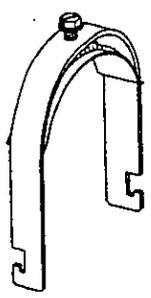

B1532S thru B1564S

Vertical pull design load.

EMT - Thinwall Conduit
IP - Iron Pipe or Rigid Conduit

All Sizes Include:
1/4"-20 Slotted Hex Head Machine Screw

MATERIAL:
12 Ga. (2.6), 14 Ga. (1.9) and
16 Ga. (1.5) ASTM A570 Grade 33

NEW

B1508S thru B1524S

B1508 THRU B1564S CONDUIT/STRUT CLAMPS

STANDARD FINISH: Electro-Plated

Contractor:	Total Electrical Construction Co., Inc.		
Date:	10/13/09		
Project:	WO#12 – South Wing Emergency Stair Repair		
Contract:	BT-200.200		
Item:	Spring Nuts		
Spec Section:	16190 – Supporting Devices		
Page:	16190-2		
Paragraph:	2.02		
Drawing No.:	-		
Submittal No.:	16190-03	**Rev:**	1
Approved By:	Michael Lipari		

Note:

For work inside stair halls only.
1" conduit is maximum size used.

THE PORT AUTHORITY OF NY & NJ

APPROVED
X APPROVED AS CORRECTED
( ) NOT APPROVED

16190-003
200.200 W.O. 12

APPROVAL IS ONLY FOR COMFORMANCE WITH THE DESIGN CONCEPT OF THE PROJECT AND COMPLIANCE WITH THE INFORMATION GIVEN IN THE CONTRACT DOCUMENTS. CONTRACTOR IS RESPONSIBLE FOR CONFORMING AND CORRELATING ALL DIMENSIONS AT THE JOB SITE FOR OPERATIONS THAT PERTAIN TO THE FABRICATION PROCESSES OR TO TECHNIQUES OF CONSTRUCTION AND FOR COORDINATION OF THE WORK OF ALL TRADES.

The Port Authority of NY & NJ
Engineering Department

Date: 11-12-09 By: S Wondolowski
Senior Structual Engineer

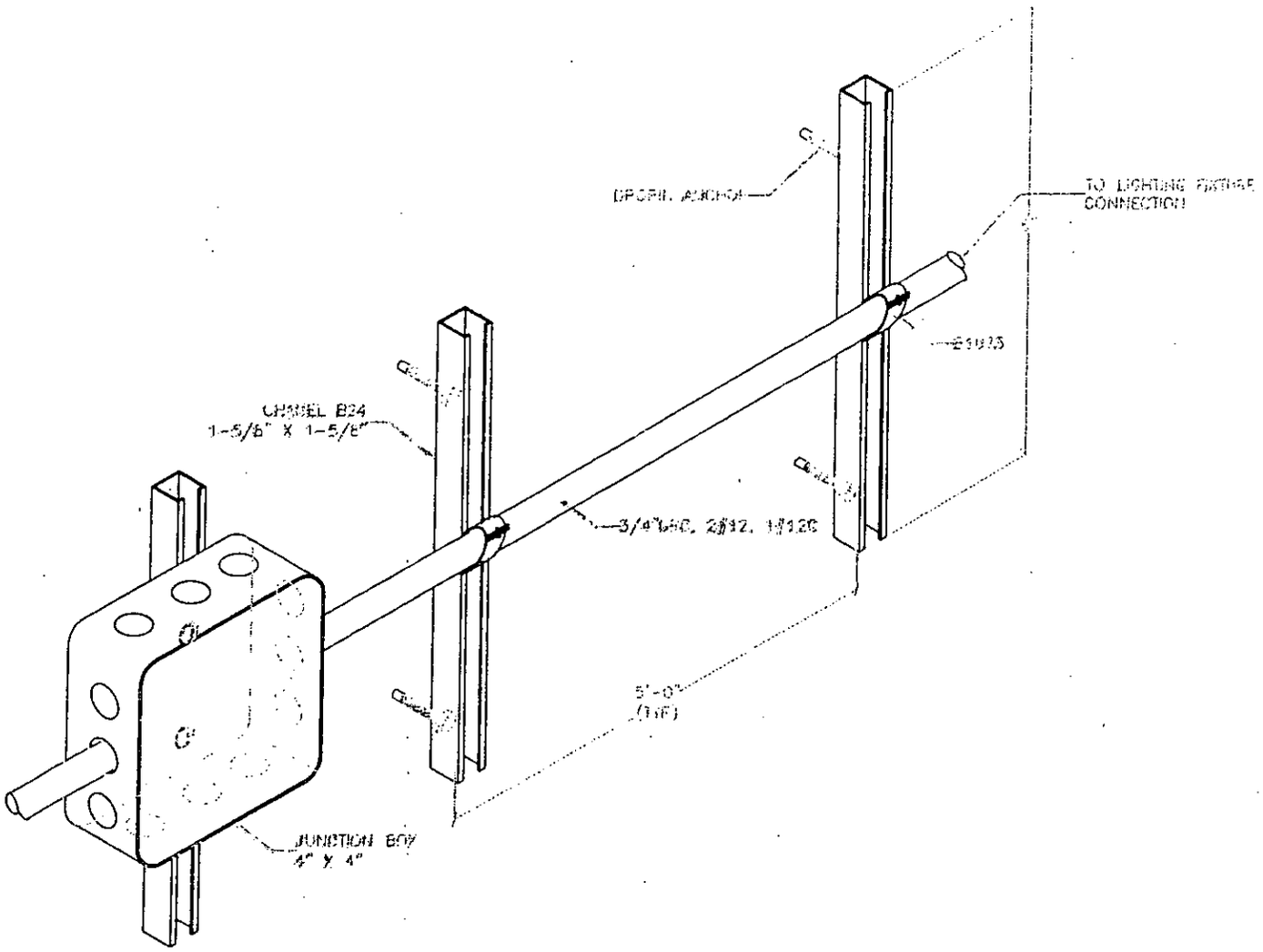

TOTAL ELECTRICAL
CONTRACTING CORPORATION
230 GREEN STREET
GREENPOINT, NY 11222

PROJECT NAME:	WO #12
	SOUTH WING EMERGENCY STAIR REPAIR
TITLE	STAIRWAY CONDUIT SUPPORT

DRAWN BY:	CHECKED BY:	DESIGN:	DWG NO.
I.A.	M.L.	M.S.	SKETCH

SCALE: N.T.S.	DATE: 09.24.09	SHEET 1 OF 1	REV

CHANNEL NUTS & HARDWARE

B-Line Systems INC

NUTS FOR B11, B12 CHANNELS

Part Number			Thread Size	Thickness		Weight Per 100	
With Spring	Without Spring	Twirl Nut				Lbs.	kg
N721	N221WO	TN221	#8-32	¼"	(6.3)	7.0	(3.17)
N722	N222WO	TN222	#10-24	¼"	(6.3)	7.0	(3.17)
N727	N227WO	TN227	#10-32	¼"	(6.3)	7.0	(3.17)
N724	N224WO	TN224	¼-20	¼"	(6.3)	6.7	(3.04)
N723	N223WO	TN223	5/16-18	¼"	(6.3)	6.7	(3.04)
N728	N228WO	TN228	⅜-16	⅜"	(9.5)	9.3	(4.22)
N726	N226WO	TN226	7/16-14	⅜"	(9.5)	8.8	(3.99)
N725	N225WO	TN225	½-13	½"	(12.7)	11.6	(5.26)
N755	N255WO	–	⅝-11	½"	(12.7)	16.4	(7.44)
N775	N275WO	–	¾-10	½"	(12.7)	14.5	(6.58)
N778	N278WO	–	⅞-9	½"	(12.7)	12.5	(5.67)

STANDARD FINISH: Electro-Plated

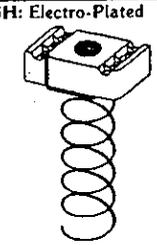

SPRING NUT

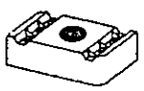

NUT WITHOUT SPRING

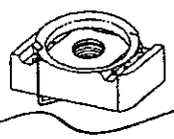

Patented

TWIRL-NUT ®

Size as Needed

PROVIDE HOT-DIPPED GALVANIZED

STUD NUTS FOR B11, B12 CHANNELS

Part Number			Thread Size	Thickness		Stud Length		Weight Per 100	
With Spring	Without Spring	Twirl Nut						Lbs.	kg
SN724-¾	SN224-¾WO	STN224-¾	¼-20	¼"	(6.3)	¾	(19.0)	7.7	(3.49)
SN724-1	SN224-1WO	STN224-1				1	(25.4)	8.0	(3.63)
SN724-1¼	SN224-1¼WO	STN224-1¼				1¼	(31.7)	8.2	(3.72)
SN724-1½	SN224-1½WO	STN224-1½				1½	(38.1)	8.4	(3.81)
SN728-¾	SN228-¾WO	STN228-¾	⅜-16	⅜"	(9.5)	¾	(19.0)	12.0	(5.44)
SN728-1	SN228-1WO	STN228-1				1	(25.4)	12.6	(5.71)
SN728-1¼	SN228-1¼WO	STN228-1¼				1¼	(31.7)	13.2	(5.99)
SN728-1½	SN228-1½WO	STN228-1½				1½	(38.1)	13.8	(6.26)
SN725-¾	SN225-¾WO	STN225-¾	½-13	½"	(12.7)	¾	(19.0)	16.5	(7.48)
SN725-1	SN225-1WO	STN225-1				1	(25.4)	17.6	(7.98)
SN725-1¼	SN225-1¼WO	STN225-1¼				1¼	(31.7)	18.7	(8.48)
SN725-1½	SN225-1½WO	STN225-1½				1½	(38.1)	19.8	(8.98)

STANDARD FINISH: Electro-Plated

Other stud lengths available

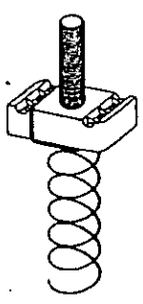

STUD NUT WITH SPRING

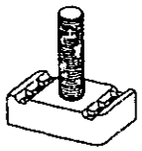

STUD NUT WITHOUT SPRING

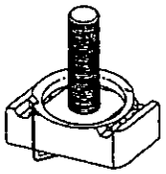

TWIRL STUD NUT

Contractor:	Total Electrical Construction Co., Inc.		
Date:	10/13/09		
Project:	WO#12 – South Wing Emergency Stair Repair		
Contract:	BT-200.200		
Item:	Machine Screws		
Spec Section:	16190 – Supporting Devices		
Page:	16190-6		
Paragraph:	2.04		
Drawing No.:	-		
Submittal No.:	16190-04	**Rev:**	1
Approved By:	Michael Lipari		

Note:

For work inside stair halls only.
1" conduit is maximum size used.

THE PORT AUTHORITY OF NY & NJ

☒ APPROVED
( ) APPROVED AS CORRECTED
( ) NOT APPROVED

16190-004
200.200 W.O. 12

APPROVAL IS ONLY FOR CONFORMANCE WITH THE DESIGN CONCEPT OF THE PROJECT AND COMPLIANCE WITH THE INFORMATION GIVEN IN THE CONTRACT DOCUMENTS. CONTRACTOR IS RESPONSIBLE FOR CONFORMING AND CORRELATING ALL DIMENSIONS AT THE JOB SITE FOR OPERATIONS THAT PERTAIN TO THE FABRICATION PROCESSES OR TO TECHNIQUES OF CONSTRUCTION AND FOR COORDINATION OF THE WORK OF ALL TRADES.

The Port Authority of NY & NJ
Engineering Department

Date: 11-12-09 By: Stan Wozniak
Senior Structual Engineer

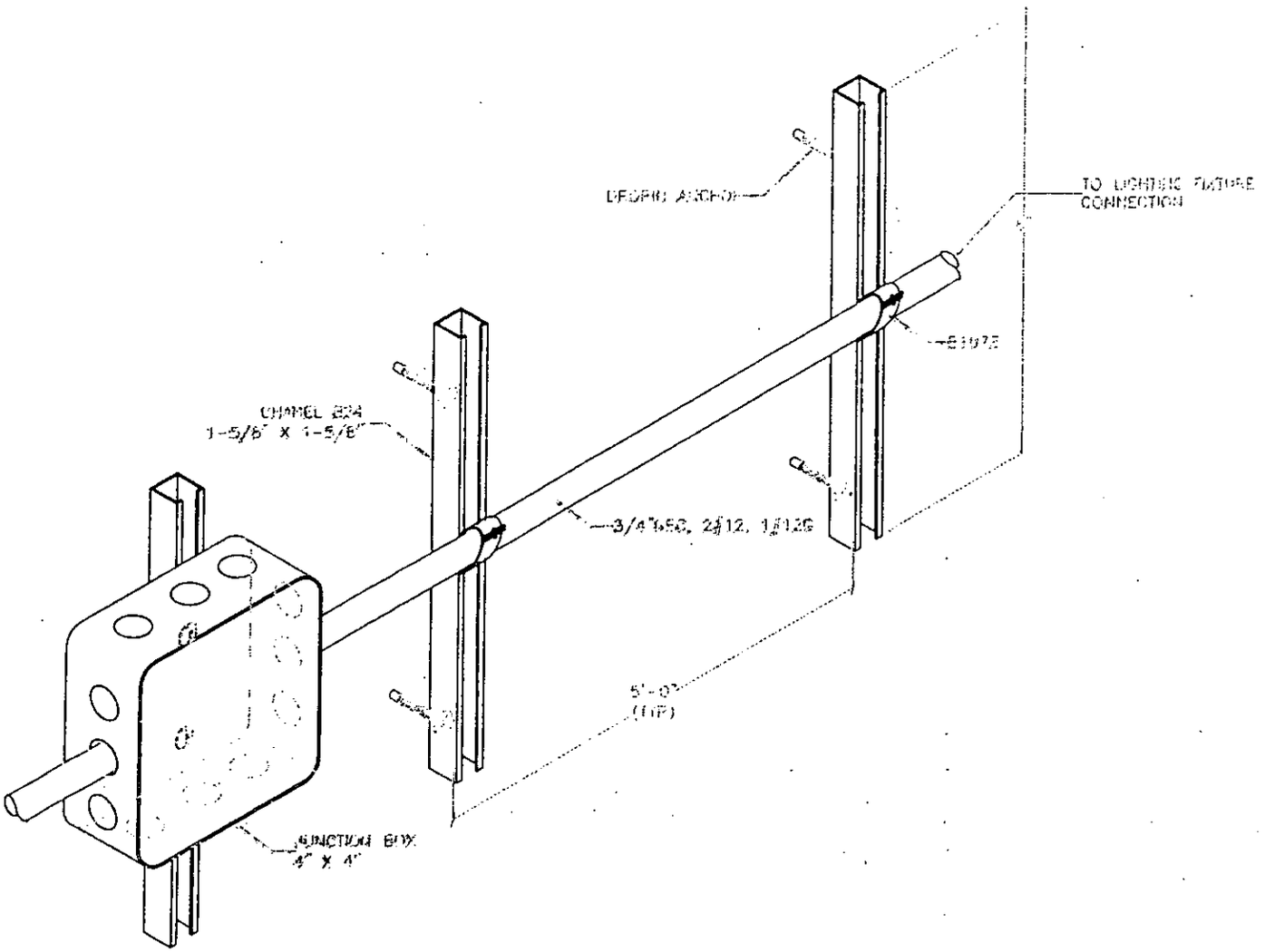

TOTAL ELECTRICAL
CONTRACTING CORPORATION
230 GREEN STREET
GREENPOINT, NY 11222

PROJECT NAME: WO #12

SOUTH WING EMERGENCY STAIR REPAIR

TITLE: STAIRWAY CONDUIT SUPPORT

DRAWN BY:	CHECKED BY:	DESIGN:	DWG NO.
I.A.	M.L.	M.S.	SKETCH

SCALE: N.T.S.	DATE: 09.24.09	SHEET 1 OF 1	REV

Machine Screws

Tanner BOLT NUT CORP.

Product Description

A Machine screw has a cylindrical shaft, threaded its entire length, and fits into a nut or a tapped hole. Several different head styles are offered. Round Combo are the same as round head except for the option of using either a slotted or Phillips screwdriver. A pan head screw protrudes above the surface of the material to be fastened. Flat head screws are countersunk into the material for a smooth surface area. Flat undercut heads are supplied to provide larger usable thread. Head height of undercut screws is approximately two-thirds that of standard screws. Drive depths are reduced proportionately.

Please see Page 43 for Tanner's Bucket of Bolts!

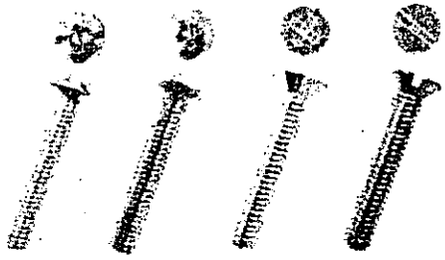

Machine Screws

Steel Zinc Plated

SIZE	ITEM CODE ROUND COMBO	ITEM CODE PAN PHILLIPS	ITEM CODE FLAT PHILLIPS	ITEM CODE FLAT SLOTTED
#6-32 x 3/16"	6C18MRCZ	6C18MPPZ		6C18MFSZ
#6-32 x 1/4"	6C25MRCZ	6C25MPPZ	6C25MFPZ	6C25MFSZ
#6-32 x 3/8"	6C37MRCZ	6C37MPPZ	6C37MFPZ	6C37MFSZ
#6-32 x 1/2"	6C50MRCZ	6C50MPPZ	6C50MFPZ	6C50MFSZ
#6-32 x 5/8"	6C62MRCZ	6C62MPPZ	6C62MFPZ	6C62MFSZ
#6-32 x 3/4"	6C75MRCZ	6C75MPPZ	6C75MFPZ	6C75MFSZ
#6-32 x 1"	6C100MRCZ	6C100MPPZ	6C100MFPZ	6C100MFSZ
#6-32 x 1-1/4"	6C125MRCZ	6C125MPPZ	6C125MFPZ	6C125MFSZ
#6-32 x 1-1/2"	6C150MRCZ	6C150MPPZ	6C150MFPZ	6C150MFSZ
#6-32 x 1-3/4"	6C175MRCZ	6C175MPPZ	6C175MFPZ	6C175MFSZ
#6-32 x 2"	6C200MRCZ	6C200MPPZ	6C200MFPZ	6C200MFSZ
#6-32 x 2-1/2"	6C250MRCZ			6C250MFSZ
#6-32 x 3"	6C300MRCZ			6C300MFSZ
#6-32 x 4"	6C400MRCZ			6C400MFSZ
#8-32 x 3/16"				8C18MFSZ
#8-32 x 1/4"		8C25MPPZ	8C25MFPZ	8C25MFSZ
#8-32 x 3/8"	8C37MRCZ	8C37MPPZ	8C37MFPZ	8C37MFSZ
#8-32 x 1/2"	8C50MRCZ	8C50MPPZ	8C50MFPZ	8C50MFSZ
#8-32 x 5/8"	8C62MRCZ	8C62MPPZ	8C62MFPZ	8C62MFSZ
#8-32 x 3/4"	8C75MRCZ	8C75MPPZ	8C75MFPZ	8C75MFSZ
#8-32 x 1"	8C100MRCZ	8C100MPPZ	8C100MFPZ	8C100MFSZ
#8-32 x 1-1/4"	8C125MRCZ	8C125MPPZ	8C125MFPZ	8C125MFSZ
#8-32 x 1-1/2"	8C150MRCZ	8C150MPPZ	8C150MFPZ	8C150MFSZ
#8-32 x 1-3/4"		8C175MPPZ		8C175MFSZ
#8-32 x 2"	8C200MRCZ	8C200MPPZ	8C200MFPZ	8C200MFSZ
#8-32 x 2-1/2"	8C250MRCZ	8C250MPPZ	8C250MFPZ	8C250MFSZ
#8-32 x 3"	8C300MRCZ	8C300MPPZ		8C300MFSZ
#8-32 x 4"	8C400MRCZ			8C400MFSZ
#10-24 x 1/4"		10C25MPPZ	10C25MFPZ	10C25MFSZ
#10-24 x 3/8"	10C37MRCZ	10C37MPPZ	10C37MFPZ	10C37MFSZ
#10-24 x 1/2"	10C50MRCZ	10C50MPPZ	10C50MFPZ	10C50MFSZ

Machine Screws *cont.*

SIZE	ITEM CODE ROUND COMBO	ITEM CODE PAN PHILLIPS	ITEM CODE FLAT PHILLIPS	ITEM CODE FLAT SLOTTED
#10-24 x 5/8"	10C62MRCZ	10C62MPPZ	10C62MFPZ	10C62MFSZ
#10-24 x 3/4"	10C75MRCZ	10C75MPPZ	10C75MFPZ	10C75MFSZ
#10-24 x 1"	10C100MRCZ	10C100MPPZ	10C100MFPZ	10C100MFSZ
#10-24 x 1-1/4"	10C125MRCZ	10C125MPPZ	10C125MFPZ	10C125MFSZ
#10-24 x 1-1/2"	10C150MRCZ	10C150MPPZ	10C150MFPZ	10C150MFSZ
#10-24 x 1-3/4"		10C175MPPZ	10C175MFPZ	10C175MFSZ
#10-24 x 2"	10C200MRCZ	10C200MPPZ	10C200MFPZ	10C200MFSZ
#10-24 x 2-1/2"	10C250MRCZ	10C250MPPZ		10C250MFSZ
#10-24 x 3"	10C300MRCZ			10C300MFSZ
#10-24 x 4"	10C400MRCZ			10C400MFSZ
#10-32 x 1/4"		10F25MPPZ	10F25MFPZ	10F25MFSZ
#10-32 x 3/8"	10F37MRCZ	10F37MPPZ	10F37MFPZ	10F37MFSZ
#10-32 x 1/2"	10F50MRCZ	10F50MPPZ	10F50MFPZ	10F50MFSZ
#10-32 x 5/8"	10F62MRCZ	10F62MPPZ	10F62MFPZ	10F62MFSZ
#10-32 x 3/4"	10F75MRCZ	10F75MPPZ	10F75MFPZ	10F75MFSZ
#10-32 x 1"	10F100MRCZ	10F100MPPZ	10F100MFPZ	10F100MFSZ
#10-32 x 1-1/4"	10F125MRCZ	10F125MPPZ	10F125MFPZ	10F125MFSZ
#10-32 x 1-1/2"	10F150MRCZ	10F150MPPZ	10F150MFPZ	10F150MFSZ
#10-32 x 1-3/4"		10F175MPPZ	10F175MFPZ	10F175MFSZ
#10-32 x 2"	10F200MRCZ	10F200MPPZ	10F200MFPZ	10F200MFSZ
#10-32 x 2-1/2"	10F250MRCZ	10F250MPPZ	10F250MFSZ	
#10-32 x 3"		10F300MPPZ		10F300MFSZ
#10-32 x 4"				10F400MFSZ
#12-24 x 1/2"				12C50MFSZ
#12-24 x 5/8"				12C75MFSZ
#12-24 x 3/4"				12C100MFSZ
#12-24 x 1"				12C125MFSZ
#12-24 x 1-1/2"				12C150MFSZ
#12-24 x 2"				12C200MFSZ
1/4"-20 x 3/8"	25C37MRCZ	25C37MPPZ	25C37MFPZ	25C37MFSZ
1/4"-20 x 1/2"	25C50MRCZ	25C50MPPZ	25C50MFPZ	25C50MFSZ
1/4"-20 x 5/8"	25C62MRCZ	25C62MPPZ	25C62MFPZ	25C62MFSZ
1/4"-20 x 3/4"	25C75MRCZ	25C75MPPZ	25C75MFPZ	25C75MFSZ
1/4"-20 x 1"	25C100MRCZ	25C100MPPZ	25C100MFPZ	25C100MFSZ
1/4"-20 x 1-1/4"	25C125MRCZ	25C125MPPZ	25C125MFPZ	25C125MFSZ
1/4"-20 x 1-1/2"	25C150MRCZ	25C150MPPZ	25C150MFPZ	25C150MFSZ
1/4"-20 x 1-3/4"		25C175MPPZ		25C175MFSZ
1/4"-20 x 2"	25C200MRCZ	25C200MPPZ	25C200MFPZ	25C200MFSZ
1/4"-20 x 2-1/2"	25C250MRCZ	25C250MPPZ	25C250MFPZ	25C250MFSZ
1/4"-20 x 3"	25C300MRCZ	25C300MPPZ	25C300MFPZ	25C300MFSZ
1/4"-20 x 3-1/2"	25C350MRCZ	25C350MPPZ	25C350MFPZ	25C350MFSZ
1/4"-20 x 4"	25C400MRCZ	25C400MPPZ	25C400MFPZ	25C400MFSZ
1/4"-20 x 5"	25C500MRCZ	25C500MPPZ	25C500MFPZ	25C500MFSZ
1/4"-20 x 6"	25C600MRCZ	25C600MPPZ	25C600MFPZ	25C600MFSZ
3/8"-16 x 3/4"	37C75MRCZ			37C75MFSZ
3/8"-16 x 1"	37C100MRCZ			37C100MFSZ
3/8"-16 x 1-1/4"	37C125MRCZ			37C125MFSZ
3/8"-16 x 1-1/2"	37C150MRCZ			37C150MFSZ
3/8"-16 x 2"	37C200MRCZ			37C200MFSZ
3/8"-16 x 2-1/2"				*37C250MFSZ
3/8"-16 x 3"	*37C300MRCZ			*37C300MFSZ
5/8"-16 x 4"	*37C400MRCZ			*37C400MFSZ
1/2"-13 x 1"				*50C100MFSZ
1/2"-13 x 1-1/2"				*50C150MFSZ
1/2"-13 x 2"				*50C200MFSZ
1/2"-13 x 3"				*50C300MFSZ

• *Note: All machine screws are packaged 100/bx, except * 50/box.*

Contractor:	Total Electrical Construction Co., Inc.		
Date:	10/13/09		
Project:	WO#12 – South Wing Emergency Stair Repair		
Contract:	BT-200.200		
Item:	Sheet Metal Screws		
Spec Section:	16190 – Supporting Devices		
Page:	16190-6		
Paragraph:	2.04		
Drawing No.:	-		
Submittal No.:	16190-05	**Rev:**	1
Approved By:	Michael Lipari		

Note:

For work inside stair halls only.
1" conduit is maximum size used.

THE PORT AUTHORITY OF NY & N.

(X) APPROVED
( ) APPROVED AS CORRLCTED
( ) NOT APPROVED

16190-005
200.200 W.O. 12

APPROVAL IS ONLY FOR COMFORMANCE WITH THE DESIGN CONCEPT OF THE PROJECT AND COMPLIANCE WITH THE INFORMATION GIVEN IN THE CONTRACT DOCUMENTS. CONTRACTOR IS RESPONSIBLE FOR CONFORMING AND CORRELATING ALL DIMENSIONS AT THE JOB SITE FOR OPERATIONS THAT PERTAIN TO THE FABRICATION PROCESSES OR TO TECHNIQUES OF CONSTRUCTION AND FOR COORDINATION OF THE WORK OF ALL TRADES.

The Port Authority of NY & NJ
Engineering Department

Date: 11-12-09 By: S Wandelak
Senior Structual Engineer

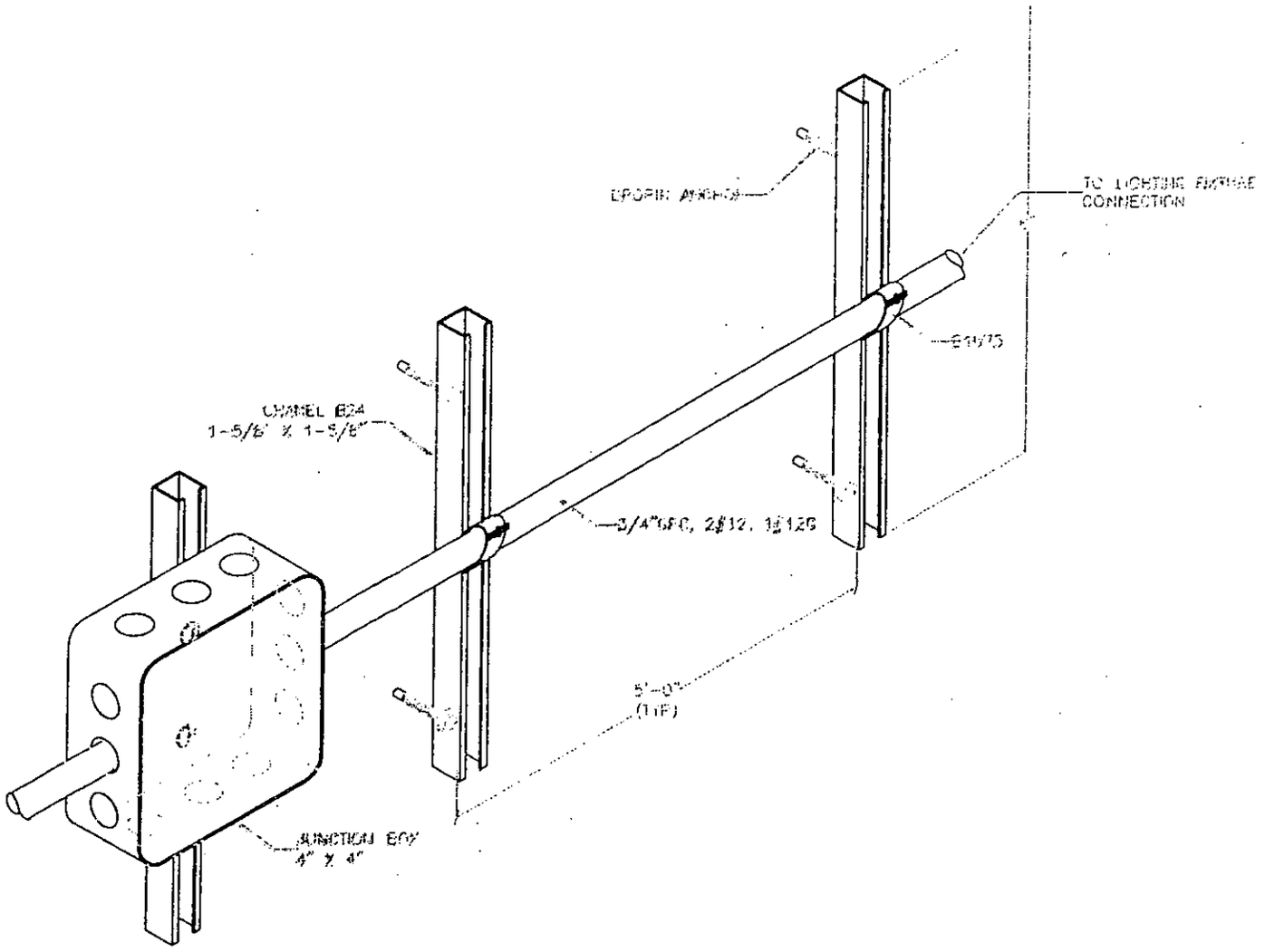

TOTAL ELECTRICAL CONTRACTING CORPORATION 230 GREEN STREET GREENPOINT, NY 11222	PROJECT NAME: WO #12 SOUTH WING EMERGENCY STAIR REPAIR			
	TITLE: STAIRWAY CONDUIT SUPPORT			
	DRAWN BY: I.A.	CHECKED BY: M.L.	DESIGN: M.S.	DWG NO. SKETCH
	SCALE: N.T.S.	DATE: 09.24.09	SHEET 1 OF 1	REV

Sheet Metal Screws

Size as Needed

Tanner BOLT NUT CORP.

Product Description

Sheet metal screws/tapping screws are threaded fasteners with the unique ability to "tap" their own mating internal thread when driven into preformed holes in metallic and non-metallic materials. Sheet metal screws/tapping screws are high strength, one-piece, one-side-installation fasteners. Because they form or cut their own mating thread, there is unusually good thread fit, which enhances resistance to loosening in service. Sheet metal screws/tapping screws can be disassembled and are generally reusable.

Please see Page 43 for Tanner's Bucket of Bolts!

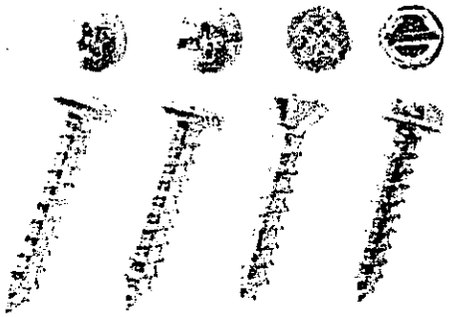

Sheet Metal Screws

Steel Zinc Plated

SIZE	ITEM CODE PAN PHILLIPS	ITEM CODE PAN COMBO	ITEM CODE FLAT PHILLIPS	ITEM CODE HEX WASHER HD
#4 x 1/4"	4N25TPPZ			
#4 x 3/8"	4N37TPPZ			
#4 x 1/2"	4N50TPPZ		4N50TFPZ	
#4 x 5/8"	4N62TPPZ		4N62TFPZ	
#4 x 3/4"	4N75TPPZ		4N75TFPZ	
#4 x 1"	4N100TPPZ		4N100TFPZ	
#6 x 1/4"	6N25TPPZ		6N25TFPZ	
#6 x 3/8"	6N37TPPZ	6N37TPCZ	6N37TFPZ	6N37THWSZ
#6 x 1/2"	6N50TPPZ	6N50TPCZ	6N50TFPZ	6N50THWSZ
#6 x 5/8"	6N62TPPZ	6N62TPCZ	6N62TFPZ	6N62THWSZ
#6 x 3/4"	6N75TPPZ	6N75TPCZ	6N75TFPZ	6N75THWSZ
#6 x 1"	6N100TPPZ	6N100TPCZ	6N100TFPZ	6N100THWSZ
#6 x 1-1/4"	6N125TPPZ	6N125TPCZ	6N125TFPZ	
#6 x 1-1/2"	6N150TPPZ	6N150TPCZ	6N150TFPZ	6N150THWSZ
#6 x 1-3/4"	6N175TPPZ	6N175TPCZ	6N175TFPZ	
#6 x 2"	6N200TPPZ	6N200TPCZ	6N200TFPZ	6N200THWSZ
#8 x 1/4"	8N25TPPZ			
#8 x 3/8"	8N37TPPZ	8N37TPCZ	8N37TFPZ	8N37THWSZ
#8 x 1/2"	8N50TPPZ	8N50TPCZ	8N50TFPZ	8N50THWSZ
#8 x 5/8"	8N62TPPZ	8N62TPCZ	8N62TFPZ	8N62THWSZ
#8 x 3/4"	8N75TPPZ	8N75TPCZ	8N75TFPZ	8N75THWSZ
#8 x 1"	8N100TPPZ	8N100TPCZ	8N100TFPZ	8N100THWSZ
#8 x 1-1/4"	8N125TPPZ	8N125TPCZ	8N125TFPZ	8N125THWSZ
#8 x 1-1/2"	8N150TPPZ	8N150TPCZ	8N150TFPZ	8N150THWSZ
#8 x 1-3/4"	8N175TPPZ		8N175TFPZ	8N175THWSZ
#8 x 2"	8N200TPPZ	8N200TPCZ	8N200TFPZ	8N200THWSZ
#8 x 2-1/2"	8N250TPPZ		8N250TFPZ	8N250THWSZ
#8 x 3"	8N300TPPZ		8N300TFPZ	8N300THWSZ
#8 x 3-1/2"			8N350TFPZ	

Sheet Metal Screws *cont.*

SIZE	ITEM CODE PAN PHILLIPS	ITEM CODE PAN COMBO	ITEM CODE FLAT PHILLIPS	ITEM CODE HEX WASHER HD
#10 x 3/8"	10N37TPPZ	10N37TPCZ	10N37TFPZ	
#10 x 1/2"	10N50TPPZ	10N50TPCZ	10N50TFPZ	10N50THWSZ
#10 x 5/8"	10N62TPPZ	10N62TPCZ	10N62TFPZ	10N62THWSZ
#10 x 3/4"	10N75TPPZ	10N75TPCZ	10N75TFPZ	10N75THWSZ
#10 x 1"	10N100TPPZ	10N100TPCZ	10N100TFPZ	10N100THWSZ
#10 x 1-1/4"	10N125TPPZ	10N125TPCZ	10N125TFPZ	10N125THWSZ
#10 x 1-1/2"	10N150TPPZ	10N150TPCZ	10N150TFPZ	10N150THWSZ
#10 x 1-3/4"	10N175TPPZ	10N175TPCZ	10N175TFPZ	10N175THWSZ
#10 x 2"	10N200TPPZ	10N200TPCZ	10N200TFPZ	10N200THWSZ
#10 x 2-1/2"	10N250TPPZ	10N250TPCZ	10N250TFPZ	10N250THWSZ
#10 x 3"	10N300TPPZ	10N300TPCZ	10N300TFPZ	10N300THWSZ
#10 x 3-1/2"			10N350TFPZ	
#10 x 4"			10N400TFPZ	
#12 x 1/2"	12N50TPPZ	12N50TPCZ	12N50TFPZ	12N50THWSZ
#12 x 5/8"	12N62TPPZ		12N62TFPZ	12N62THWSZ
#12 x 3/4"	12N75TPPZ	12N75TPCZ	12N75TFPZ	12N75THWSZ
#12 x 1"	12N100TPPZ	12N100TPCZ	12N100TFPZ	12N100THWSZ
#12 x 1-1/4"	12N125TPPZ	12N125TPCZ	12N125TFPZ	12N125THWSZ
#12 x 1-1/2"	12N150TPPZ	12N150TPCZ	12N150TFPZ	12N150THWSZ
#12 x 1-3/4"	12N175TPPZ	12N175TPCZ	12N175TFPZ	
#12 x 2"	12N200TPPZ	12N200TPCZ	12N200TFPZ	12N200THWSZ
#12 x 2-1/2"	12N250TPPZ	12N250TPCZ	12N250TFPZ	12N250THWSZ
#12 x 3"	12N300TPPZ	12N300TPCZ	12N300TFPZ	12N300THWSZ
#12 x 3-1/2"			12N350TFPZ	
#12 x 4"			12N400TFPZ	
#14 x 1/2"	14N50TPPZ	14N50TPCZ	14N50TFPZ	14N50THWSZ
#14 x 5/8"	14N62TPPZ	14N62TPCZ	14N62TFPZ	14N62THWSZ
#14 x 3/4"	14N75TPPZ	14N75TPCZ	14N75TFPZ	14N75THWSZ
#14 x 1"	14N100TPPZ	14N100TPCZ	14N100TFPZ	14N100THWSZ
#14 x 1-1/4"	14N125TPPZ	14N125TPCZ	14N125TFPZ	14N125THWSZ
#14 x 1-1/2"	14N150TPPZ	14N150TPCZ	14N150TFPZ	14N150THWSZ
#14 x 1-3/4"	14N175TPPZ	14N175TPCZ	14N175TFPZ	14N175THWSZ
#14 x 2"	14N200TPPZ	14N200TPCZ	14N200TFPZ	14N200THWSZ
#14 x 2-1/2"	14N250TPPZ	14N250TPCZ	14N250TFPZ	14N250THWSZ
#14 x 3"	14N300TPPZ	14N300TPCZ	14N300TFPZ	14N300THWSZ
#14 x 3-1/2"	14N350TPPZ		14N350TFPZ	
#14 x 4"			14N400TFPZ	
#14 x 5"			14N500TFPZ	
#14 x 6"			14N600TFPZ	

• *Note: All sheet metal screws are packaged 100/bx*

Suggested Hole Sizes for Type AB Sheet Metal Screws

SCREW SIZE	DRILL SIZE MAX	MEAN	MIN	TAP DRILL SIZE
#4-24	.103	.096	.089	3/32
#5-20	.114	.107	.100	1/8
#6-20	.124	.116	.108	9/64
#8-18	.148	.138	.128	9/64
#10-16	.170	.159	.148	5/32
#12-14	.194	.182	.169	3/16
#14-14	.226	.211	.196	7/32

FASTENERS

Contractor:	Total Electrical Construction Co., Inc.		
Date:	10/13/09		
Project:	WO#12 – South Wing Emergency Stair Repair		
Contract:	BT-200.200		
Item:	Stud Bolt Anchors		
Spec Section:	16190 – Supporting Devices		
Page:	16190-6		
Paragraph:	2.04		
Drawing No.:	-		
Submittal No.:	16190-06	**Rev:**	1
Approved By:	Michael Lipari		

Note:

For work inside stair halls only.
1" conduit is maximum size used.

THE PORT AUTHORITY OF NY & NJ

16190-006
200.200 W.O. 12

(X) APPROVED
( ) APPROVED AS CORRECTED
( ) NOT APPROVED

APPROVAL IS ONLY FOR CONFORMANCE WITH THE DESIGN CONCEPT OF THE PROJECT AND COMPLIANCE WITH THE INFORMATION GIVEN IN THE CONTRACT DOCUMENTS. CONTRACTOR IS RESPONSIBLE FOR CONFORMING AND CORRELATING ALL DIMENSIONS AT THE JOB SITE FOR OPERATIONS THAT PERTAIN TO THE FABRICATION PROCESSES OR TO TECHNIQUES OF CONSTRUCTION AND FOR COORDINATION OF THE WORK OF ALL TRADES.

The Port Authority of NY & NJ
Engineering Department

Date: 11-12-09 By: S Wondolowski
Senior Structual Engineer

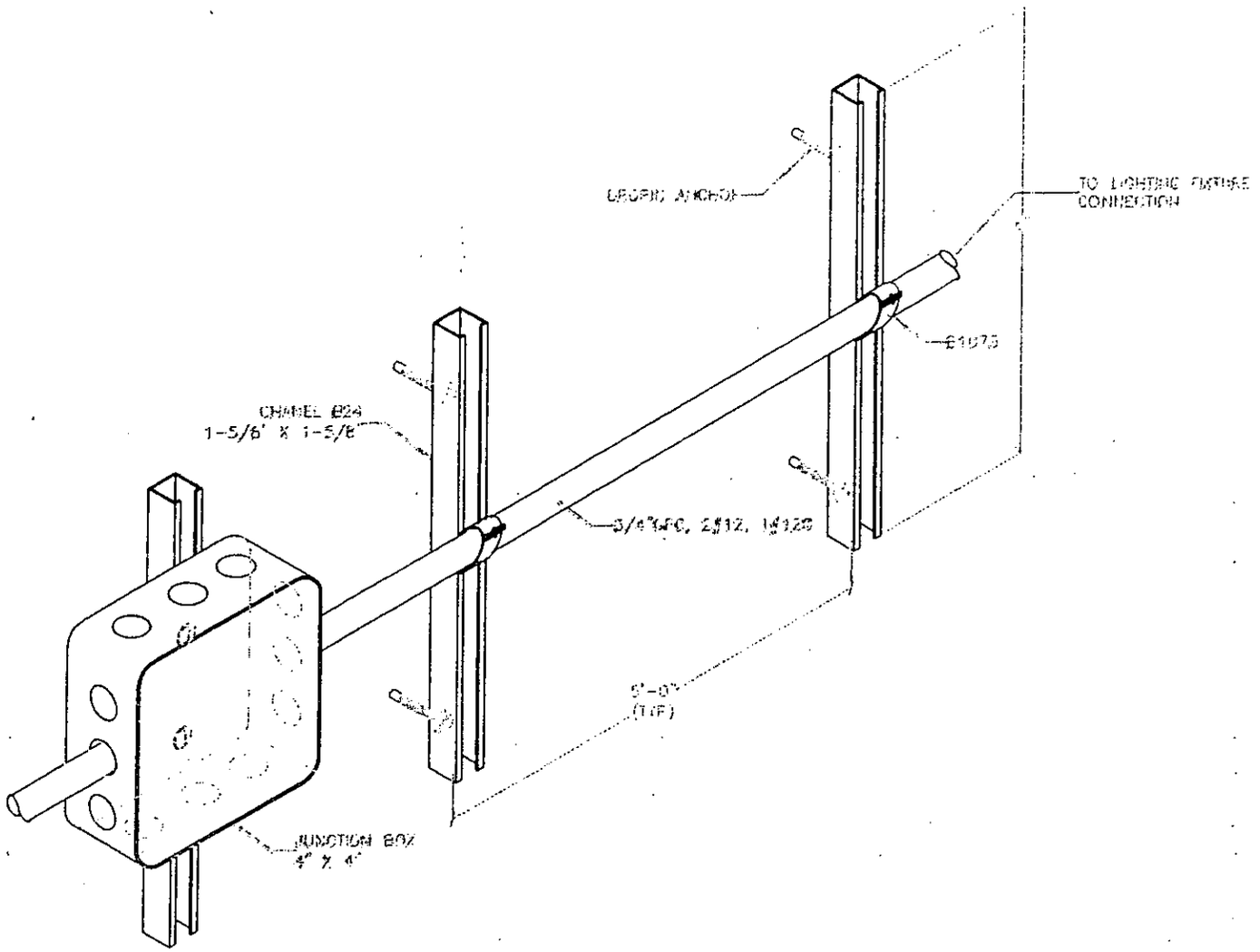

TOTAL ELECTRICAL
CONTRACTING CORPORATION
230 GREEN STREET
GREENPOINT, NY 11222

PROJECT NAME: WO #12 SOUTH WING EMERGENCY STAIR REPAIR			
TITLE: STAIRWAY CONDUIT SUPPORT			
DRAWN BY: I.A.	CHECKED BY: M.L.	DESIGN: M.S.	DWG NO. SKETCH
SCALE: N.T.S.	DATE: 09.24.09	SHEET 1 OF 1	REV

Size as Needed

THE Product Line

Power-Stud™ *Wedge Expansion Anchor*

ANCHORS

Product Description

The Power-Stud™ anchor is a fully threaded, torque controlled wedge expansion anchor which is designed for consistent performance. It is suitable for applications in solid concrete and grout-filled concrete masonry. The Power-Stud™ is produced in carbon steel as well as 304 and 316 stainless steel to offer various levels of corrosion resistance depending on application. The drill bit diameter necessary for proper installation is the same as the anchor diameter.

Advantages

- Length identification stamped on each threaded anchor
- Anchor can be installed through the fixture, no need for hole spotting
- Chamfered impact section prevents damage to threads
- Length of holes can be over-drilled or bottomless
- Convenient, fully threaded body - no shims required
- Clip design prevents spinning during installation
- All major approvals and listings available upon request

Installation

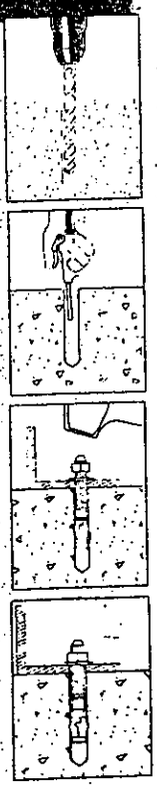

Using the proper diameter bit, drill a hole into the base material to a depth of at least 1/2" or one anchor diameter deeper than the embedment required.

Blow the hole clean of dust and other material. Do not expand the anchor prior to installation.

Position the washer on the anchor and thread on the nut. Drive the anchor through the fixture into the anchor hole until the nut and washer are firmly seated against the fixture. Be sure the anchor is driven to the required embedment depth.

Tighten the anchor by turning the nut 3 to 5 turns past finger tight or by applying the guide installation torque from the finger tight position.

Material specifications, design criteria, and performance data is available upon request.

Power-Stud™ Maximum Tightening Torque

ANCHOR DIAM.	1/4"	3/8"	1/2"	5/8"	3/4"	7/8"	1"	1-1/4"
TORQUE (ft-lbs)	8	28	60	90	175	250	300	450

• Maximum tightening torque is listed for anchors installed in normal weight concrete.

Power-Stud™ *Carbon Steel, Zinc Plated*

Carbon Steel Power-Stud™ anchors are manufactured from carbon steel which is plated with commercial bright zinc and a supplementary chromate treatment in accordance with ASTM Specification B 633, SC1, Type III.

ITEM CODE	SIZE	MIN. THREAD	THREAD LENGTH	BOX QTY.	CARTON QTY.
POW 07400	1/4" x 1-3/4"	1-1/8"	3/4"	100	500
POW 07402	1/4" x 2-1/4"	1-1/8"	1-1/4"	100	500
POW 07404	1/4" x 3-1/4"	1-1/8"	2-1/4"	100	500
POW 07410	3/8" x 2-1/4"	1-5/8"	1-1/4"	50	250
POW 07412	3/8" x 2-3/4"	1-5/8"	1-5/8"	50	250
POW 07413	3/8" x 3"	1-5/8"	1-7/8"	50	250
POW 07414	3/8" x 3-1/2"	1-5/8"	2-3/8"	50	250
POW 07415	3/8" x 3-3/4"	1-5/8"	2-5/8"	50	250
POW 07416	3/8" x 5"	1-5/8"	3-7/8"	50	250
POW 07417	3/8" x 7"	1-5/8"	5-7/8"	50	200
POW 07420	1/2" x 2-3/4"	2-1/4"	1-3/8"	50	200
POW 07422	1/2" x 3-3/4"	2-1/4"	2-3/8"	50	200
POW 07423	1/2" x 4-1/2"	2-1/4"	3-1/8"	50	200
POW 07424	1/2" x 5-1/2"	2-1/4"	4-1/8"	50	150
POW 07426	1/2" x 7"	2-1/4"	5-5/8"	25	100
POW 07427	1/2" x 8-1/2"	2-1/4"	7-1/8"	25	100
POW 07430	5/8" x 3-1/2"	2-3/4"	2"	25	100
POW 07432	5/8" x 4-1/2"	2-3/4"	3"	25	100
POW 07433	5/8" x 5"	2-3/4"	3-1/2"	25	100
POW 07434	5/8" x 6"	2-3/4"	4-1/2"	25	75
POW 07436	5/8" x 7"	2-3/4"	5-1/2"	25	75
POW 07438	5/8" x 8-1/2"	2-3/4"	7"	25	75
POW 07439	5/8" x 10"	2-3/4"	8-1/2"	25	75
POW 07440	3/4" x 4-1/4"	3-3/8"	2-3/8"	20	60
POW 07441	3/4" x 4-3/4"	3-3/8"	2-7/8"	20	60
POW 07442	3/4" x 5-1/2"	3-3/8"	3-5/8"	20	60
POW 07444	3/4" x 6-1/4"	3-3/8"	4-3/8"	20	60
POW 07446	3/4" x 7"	3-3/8"	5-1/8"	20	60
POW 07448	3/4" x 8-1/2"	3-3/8"	6-5/8"	10	40
POW 07449	3/4" x 10"	3-3/8"	8-1/8"	10	30
POW 07451	3/4" x 12"	3-3/8"	10-1/8"	10	30
POW 07450	7/8" x 6"	3-7/8"	2-3/4"	10	40
POW 07452	7/8" x 8"	3-7/8"	4-3/4"	10	40
POW 07454	7/8" x 10"	3-7/8"	6-3/4"	10	30
POW 07461	1" x 6"	4-1/2"	2-3/8"	10	30
POW 07463	1" x 9"	4-1/2"	5-3/8"	10	30
POW 07465	1" x 12"	4-1/2"	8-3/8"	5	15
POW 07473	1-1/4" x 9"	5-5/8"	4-3/4"	5	15
POW 07475	1-1/4" x 12"	5-5/8"	7-3/4"	5	15

• The published length is the overall length of the anchor. Allow for fixture thickness plus one anchor diameter for the nut and washer thickness when selecting a length.

Contractor:	Total Electrical Construction Co., Inc.		
Date:	10/13/09		
Project:	WO#12 – South Wing Emergency Stair Repair		
Contract:	BT-200.200		
Item:	Toggle Bolts		
Spec Section:	16190 – Supporting Devices		
Page:	16190-6		
Paragraph:	2.04		
Drawing No.:	-		
Submittal No.:	16190-07	**Rev:**	1
Approved By:	Michael Lipari		

Note:

For work inside stair halls only.
1" conduit is maximum size used.

THE PORT AUTHORITY OF NY & NJ

(X) APPROVED
( ) APPROVED AS CORRECTED
( ) NOT APPROVED

16190-007
200.200 W.O. 12

APPROVAL IS ONLY FOR COMFORMANCE WITH THE DESIGN CONCEPT OF THE PROJECT AND COMPLIANCE WITH THE INFORMATION GIVEN IN THE CONTRACT DOCUMENTS. CONTRACTOR IS RESPONSIBLE FOR CONFORMING AND CORRELATING ALL DIMENSIONS AT THE JOB SITE FOR OPERATIONS THAT PERTAIN TO THE FABRICATION PROCESSES OR TO TECHNIQUES OF CONSTRUCTION AND FOR COORDINATION OF THE WORK OF ALL TRADES.

The Port Authority of NY & NJ
Engineering Department

Date: 11-12-09 By: Steve Wombacher
Senior Structual Engineer

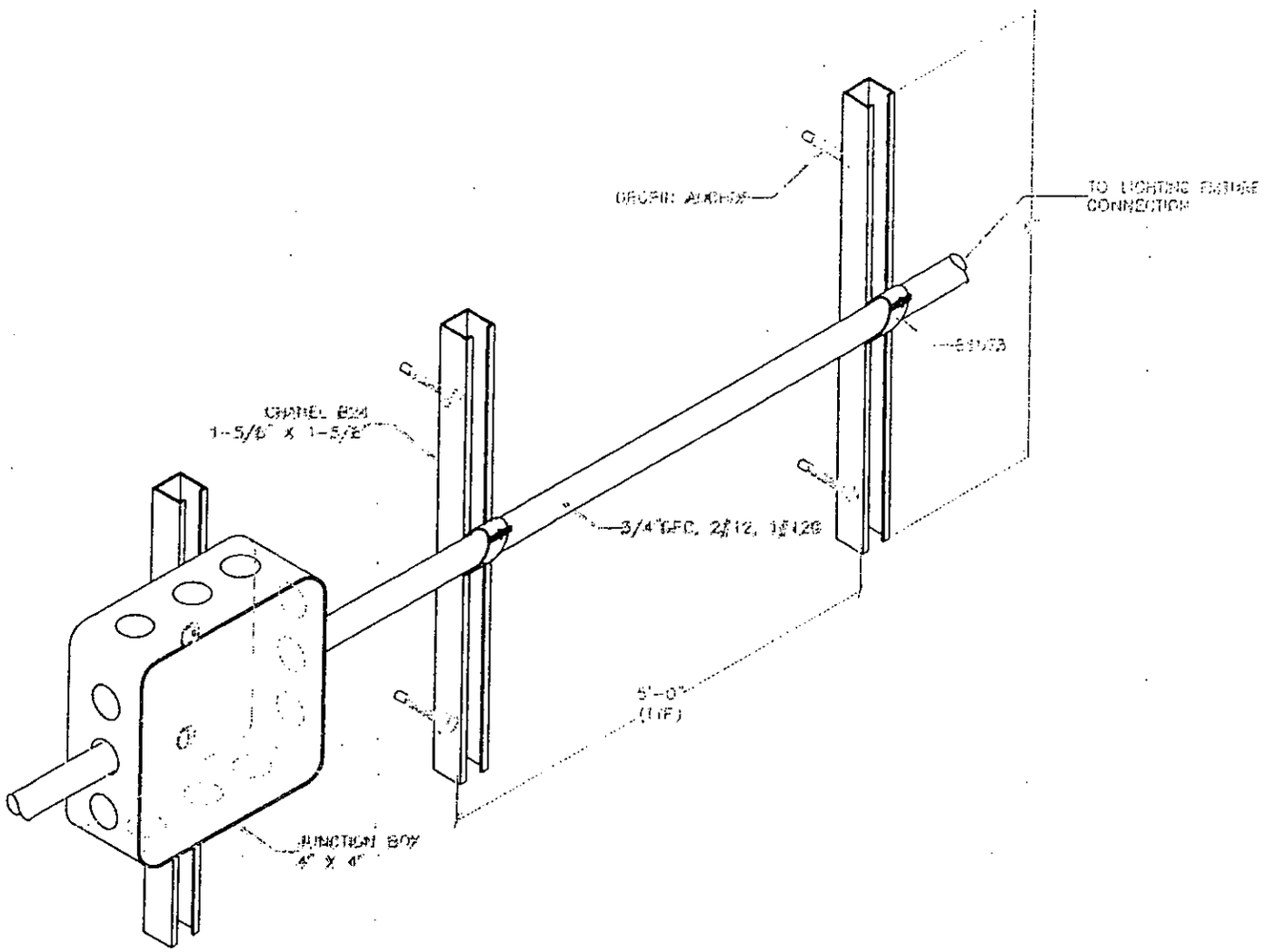

TOTAL ELECTRICAL
CONTRACTING CORPORATION
230 GREEN STREET
GREENPOINT, NY 11222

PROJECT NAME: WO #12

SOUTH WING EMERGENCY STAIR REPAIR

TITLE: STAIRWAY CONDUIT SUPPORT

DRAWN BY:	CHECKED BY:	DESIGN:	DWG NO.
I.A.	M.L.	M.S.	SKETCH

SCALE: N.T.S.	DATE: 09.24.09	SHEET 1 OF 1	REV

Concrete & Masonry Anchors

Tanner BOLT NUT CORP

Double Expansion Shields

Double expansion shields are anchors designed to be used in concrete, brick or block. Used with a machine thread screw or bolt, the anchor expands against the concrete at two points. The expansion action at both ends of the shield distributes the anchored load throughout the length of the shield. This expansion anchor is recommended for shear loads or where the bolt is subjected to side pressure or vibration. Once fastened, the object may be unbolted, removed, and/or re - fastened. The anchors are made from a die-cast zinc alloy.

Double Expansion Shields

ITEM CODE	SIZE	DRILL DIA.	BOX QTY.	ITEM CODE	BULK QTY.
DE14	1/4"-20	1/2"	100	TB-160	1000
DE56	5/16"-18	3/4"	50		
DE38	3/8"-16	3/4"	50	TB-162	500
DE12	1/2"-13	7/8"	25	TB-163	250
DE58	5/8"-11	1"	25		
DE34	3/4"-10	1-1/4"	10		

Lag Shields

Lag shield anchors are designed for anchoring into concrete, brick and block. The anchor is available in two lengths, short or long. The short shield is used for anchoring in high grade concrete or where the thickness of the base material prohibits the use of a longer length shield. The long shield is used in lower grade base material or where extra anchoring strength is needed. The shield is manufactured of zinc alloy, a rust-proof material.

Lag Shields *Short & Long*

ITEM CODE	SIZE	DRILL DIA.	LENGTH	BOX QTY.	ITEM CODE	BULK QTY.
L14S	1/4" Short	1/2"	1"	50	TB-480	2000
L56S	5/16" Short	1/2"	1-1/4"	50	TB-482	1200
L38S	3/8" Short	5/8"	1-3/4"	50	TB-484	1800
L12S	1/2" Short	3/4"	2"	50	TB-486	1000
L14L	1/4" Long	1/2"	1-1/2"	50	TB-481	800
L56L	5/16" Long	1/2"	1-3/4"	50	TB-483	500
L38L	3/8" Long	5/8"	2-7/16"	50	TB-485	500
L12L	1/2" Long	3/4"	3-1/2"	25	TB-487	300
L58L	5/8" Long	7/8"	3-1/2"	25		
L34L	3/4" Long	1"	3-1/2"	25		

Toggle Bolts

The toggle bolt is a spring wing type hollow wall anchor designed for use in block, wallboard and other hollow based materials. The toggle bolt is a two-part assembly consisting of a machine screw and a spring wing toggle. Machine screws are round head combination drive and are also available in other head styles.

Toggle Bolts shall be min. 1/4 inch

Size as Needed

Toggle Bolts *Round Head*

ITEM CODE	SIZE	BOX QTY.	ITEM CODE	BULK QTY.
TR31-300	3/16" x 3"	50	TB-100	1000
TR31-400	3/16" x 4"	50	TB-101	1000
TR14-300	1/4" x 3"	50	TB-105	500
TR14-400	1/4" x 4"	50	TB-106	500
TR38-300	3/8" x 3"	25		
TR38-400	3/8" x 4"	25		

Plastic Anchors

The plastic anchor is designed for use with light-weight fixtures with a sheet metal or wood screw. The anchor is recommended for light duty static applications where holding power is not a critical factor. It should not be used overhead.

Confirm that toggle bolts are galvanized or plated steel.

Plastic Anchors

PA *w/Sheet Metal Screw Comb.*

ITEM CODE	SIZE	DRILL DIAMETER	BOX QTY.	ITEM CODE	SIZE	BULK QTY.
POW 07559	#6-#8 x 3/4"	3/16"	100	TB-110	#10x1 SMS & Anchors	4000
POW 07569	#8-#10 x 7/8"	3/16"	100	TB-111	#10x1-1/4 SMS & Anchors	3500
POW 07579	#10-#12 x 1"	1/4"	100			
POW 07589	#14-#16 x 1-1/2"	5/16"	100	TB-115	#10 -12x1 PA only	5000

Tanner BOLT NUT CORP.

ANCHORS

Contractor:	Total Electrical Construction Co., Inc.		
Date:	10/13/09		
Project:	WO#12 – South Wing Emergency Stair Repair		
Contract:	BT-200.200		
Item:	Double Expansion Anchors		
Spec Section:	16190 – Supporting Devices		
Page:	16190-6		
Paragraph:	2.04		
Drawing No.:	-		
Submittal No.:	16190-08	**Rev:**	1
Approved By:	Michael Lipari		

Note:

For work inside stair halls only.
1" conduit is maximum size used.

THE PORT AUTHORITY OF NY & N.

☒ APPROVED
( ) APPROVED AS CORRECTED
( ) NOT APPROVED

16190-008
200.200 W.O. 12

APPROVAL IS ONLY FOR COMFORMANCE WITH THE DESIGN CONCEPT OF THE PROJECT AND COMPLIANCE WITH THE INFORMATION GIVEN IN THE CONTRACT DOCUMENTS. CONTRACTOR IS RESPONSIBLE FOR CONFORMING AND CORRELATING ALL DIMENSIONS AT THE JOB SITE FOR OPERATIONS THAT PERTAIN TO THE FABRICATION PROCESSES OR TO TECHNIQUES OF CONSTRUCTION AND FOR COORDINATION OF THE WORK OF ALL TRADES.

The Port Authority of NY & NJ
Engineering Department

Date: 11-12-09 By: S Wondolowski
Senior Structual Engineer

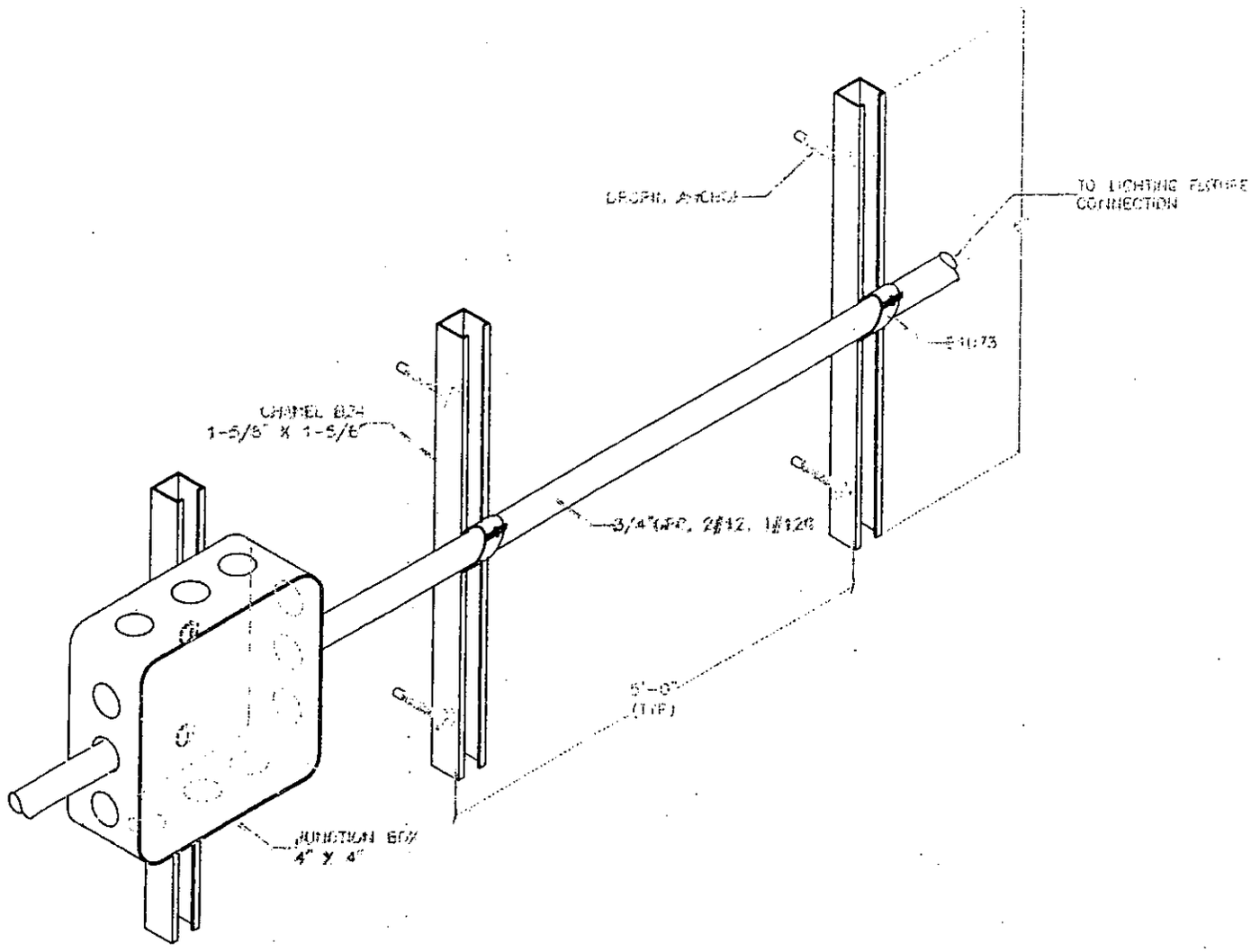

TOTAL ELECTRICAL CONTRACTING CORPORATION 230 GREEN STREET GREENPOINT, NY 11222	PROJECT NAME: WO #12 SOUTH WING EMERGENCY STAIR REPAIR			
	TITLE: STAIRWAY CONDUIT SUPPORT			
	DRAWN BY: I.A.	CHECKED BY: M.L.	DESIGN: M.S.	DWG NO. SKETCH
	SCALE: N.T.S.	DATE: 09.24.09	SHEET 1 OF 1	REV

Concrete & Masonry Anchors

Tanner BOLT · NUT CORP.

Double Expansion Shields

Double expansion shields are anchors designed to be used in concrete, brick or block. Used with a machine thread screw or bolt, the anchor expands against the concrete at two points. The expansion action at both ends of the shield distributes the anchored load throughout the length of the shield. This expansion anchor is recommended for shear loads or where the bolt is subjected to side pressure or vibration. Once fastened, the object may be unbolted, removed, and/or re - fastened. The anchors are made from a die-cast zinc alloy.

size as needed

Double Expansion Shields

ITEM CODE	SIZE	DRILL DIA.	BOX QTY.	ITEM CODE	BUCKET QTY.
DE14	1/4"-20	1/2"	100	TB-160	1000
DE56	5/16"-18	3/4"	50		
DE38	3/8"-16	3/4"	50	TB-162	500
DE12	1/2"-13	7/8"	25	TB-163	250
DE58	5/8"-11	1"	25		
DE34	3/4"-10	1-1/4"	10		

Lag Shields

Lag shield anchors are designed for anchoring into concrete, brick and block. The anchor is available in two lengths, short or long. The short shield is used for anchoring in high grade concrete or where the thickness of the base material prohibits the use of a longer length shield. The long shield is used in lower grade base material or where extra anchoring strength is needed. The shield is manufactured of zinc alloy, a rust-proof material.

Lag Shields *Short & Long*

ITEM CODE	SIZE	BOLT SIZE	DRILL DIA.	LENGTH	BOX QTY.	ITEM CODE	BUCKET QTY.
L14S	1/4" Short	1/2"	1"		50	TB-480	2000
L56S	5/16" Short	1/2"	1-1/4"		50	TB-482	1200
L38S	3/8" Short	5/8"	1-3/4"		50	TB-484	1800
L12S	1/2" Short	3/4"	2"		50	TB-486	1000
L14L	1/4" Long	1/2"	1-1/2"		50	TB-481	800
L56L	5/16" Long	1/2"	1-3/4"		50	TB-483	500
L38L	3/8" Long	5/8"	2-7/16"		50	TB-485	500
L12L	1/2" Long	3/4"	3-1/2"		25	TB-487	300
L58L	5/8" Long	7/8"	3-1/2"		25		
L34L	3/4" Long	1"	3-1/2"		25		

Toggle Bolts

The toggle bolt is a spring wing type hollow wall anchor designed for use in block, wallboard and other hollow based materials. The toggle bolt is a two-part assembly consisting of a machine screw and a spring wing toggle. Machine screws are round head combination drive and are also available in other head styles.

Toggle Bolts *Round Head*

ITEM CODE	SIZE	BOX QTY.	ITEM CODE	BUCKET QTY.
TR31-300	3/16" x 3"	50	TB-100	1000
TR31-400	3/16" x 4"	50	TB-101	1000
TR14-300	1/4" x 3"	50	TB-105	500
TR14-400	1/4" x 4"	50	TB-106	500
TR38-300	3/8" x 3"	25		
TR38-400	3/8" x 4"	25		

Plastic Anchors

The plastic anchor is designed for use with light-weight fixtures with a sheet metal or wood screw. The anchor is recommended for light duty static applications where holding power is not a critical factor. It should not be used overhead.

Plastic Anchors

PA *w/Sheet Metal Screw Comb.*

ITEM CODE	SIZE	DRILL DIAMETER	BOX QTY.	ITEM CODE	SIZE	BUCKET QTY.
POW 07559	#6-#8 x 3/4"	3/16"	100	TB-110	#10x1 SMS & Anchors	4000
POW 07569	#8-#10 x 7/8"	3/16"	100	TB-111	#10x1-1/4 SMS & Anchors	3500
POW 07579	#10-#12 x 1"	1/4"	100			
POW 07589	#14-#16 x 1-1/2"	5/16"	100	TB-115	#10 -12x1 PA only	5000

ANCHORS

Tanner BOLT · NUT CORP.

Contractor:	Total Electrical Construction Co., Inc.		
Date:	10/13/09		
Project:	WO#12 – South Wing Emergency Stair Repair		
Contract:	BT-200.200		
Item:	Drop-In Anchors		
Spec Section:	16190 – Supporting Devices		
Page:	16190-6		
Paragraph:	2.04		
Drawing No.:	-		
Submittal No.:	16190-09	**Rev:**	1
Approved By:	Michael Lipari		

Note:

For work inside stair halls only.
1" conduit is maximum size used.

THE PORT AUTHORITY OF NY & NJ

(X) APPROVED
( ) APPROVED AS CORRECTED
( ) NOT APPROVED

16190-009
200.200 W.O. 12

APPROVAL IS ONLY FOR COMFORMANCE WITH THE DESIGN CONCEPT OF THE PROJECT AND COMPLIANCE WITH THE INFORMATION GIVEN IN THE CONTRACT DOCUMENTS. CONTRACTOR IS RESPONSIBLE FOR CONFORMING AND CORRELATING ALL DIMENSIONS AT THE JOB SITE FOR OPERATIONS THAT PERTAIN TO THE FABRICATION PROCESSES OR TO TECHNIQUES OF CONSTRUCTION AND FOR COORDINATION OF THE WORK OF ALL TRADES.

The Port Authority of NY & NJ
Engineering Department

Date: 11-12-09 By: _____
Senior Structual Engineer

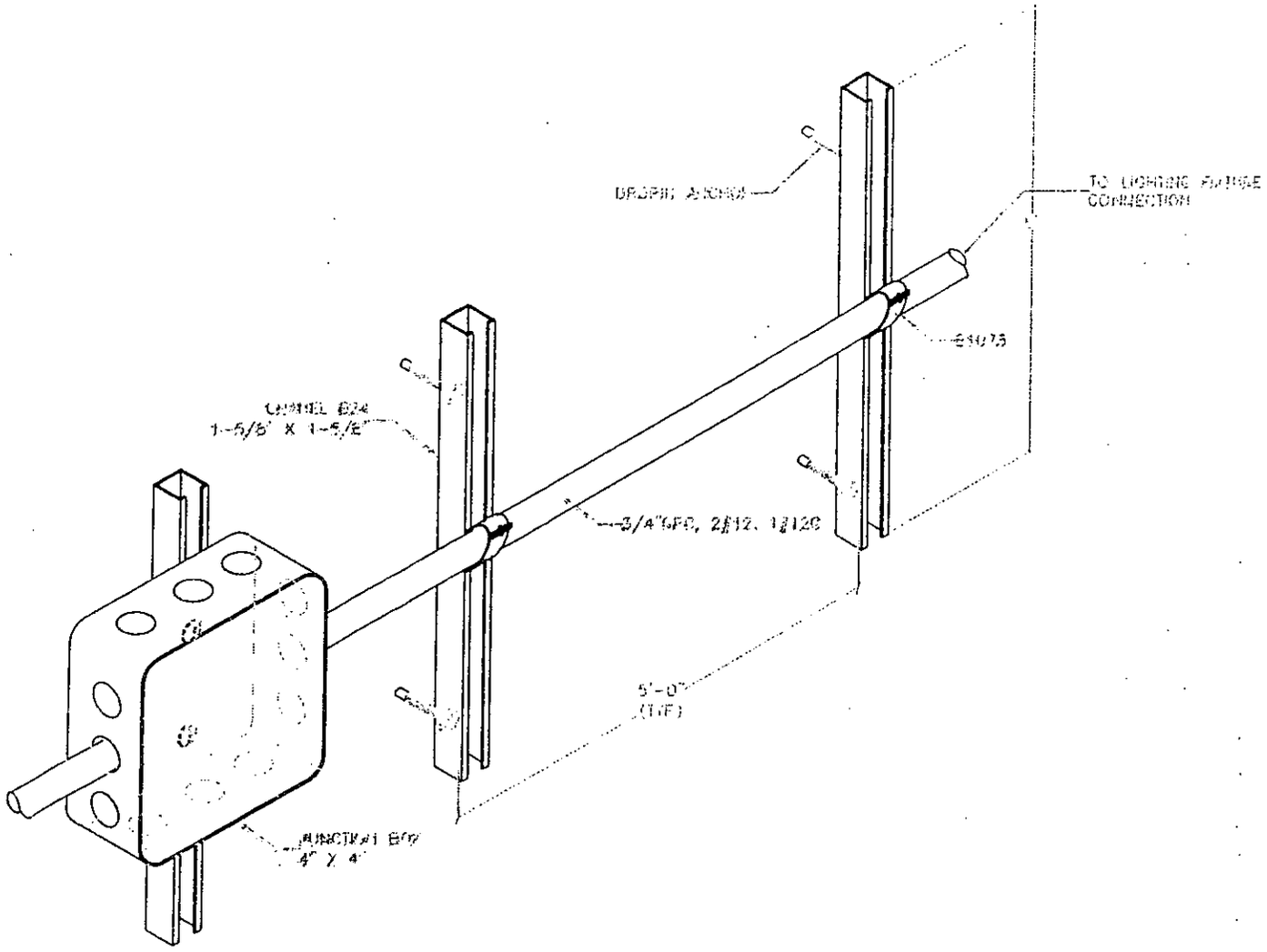

TOTAL ELECTRICAL
CONTRACTING CORPORATION
230 GREEN STREET
GREENPOINT, NY 11222

PROJECT NAME:	WO #12 SOUTH WING EMERGENCY STAIR REPAIR			
TITLE	STAIRWAY CONDUIT SUPPORT			
DRAWN BY: I.A.	CHECKED BY: M.L.	DESIGN: M.S.	DWG NO. SKETCH	
SCALE: N.T.S.	DATE: 09.24.09	SHEET 1 OF 1	REV	

THE Tanner *product Line*

PRODUCT CATALOG

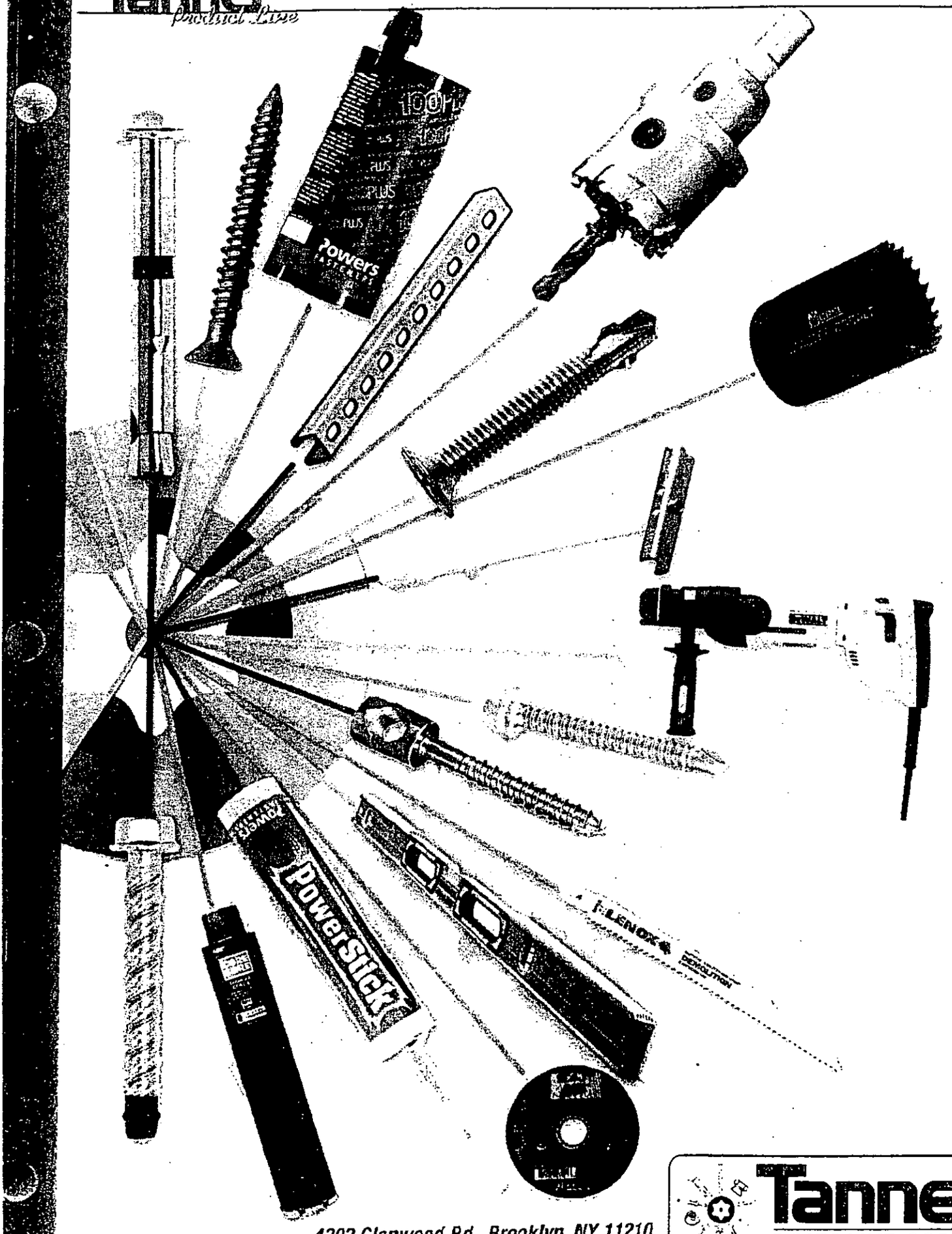

4302 Glenwood Rd., Brooklyn, NY 11210
800 456-2658 Fax: 888 434-3215 www.tannerbolt.com

Tanner
BOLT&NUT CORP.

THE

Product Pins

Dropin™ *Expansion Anchors*

Size as needed

Product Description

The Dropin™ is an all steel, machine bolt anchor available in carbon steel and two types of stainless. It can be used in solid concrete, hard stone, and solid block base materials. FM and UL listings make this anchor appropriate for overhead applications.

Applications

- Easy removability
- Flange (lipped) version installs flush for easy inspection and standardizes rod heights.
- Smooth wall dropin can be installed flush mounted or below the base material surface.
- Qualified in seismic and wind loads.

Installation Procedures

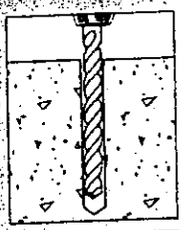

Drill a hole into the base material to the depth of embedment required. The tolerances of the drill bit used should meet the requirements of ANSI Standard B212.15. Do not over drill the hole unless the application calls for a subset anchor.

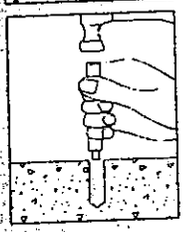

Blow the hole clean of dust and other materials. Insert the anchor into the hole and tap flush with surface. Using a Powers setting tool specifically, set the anchor by driving the tool with a sufficient number of hammer blows until the shoulder of the tool is seated against the anchor. Anchor will not hold allowable loads required if shoulder of Powers setting tool does not seat against anchor.

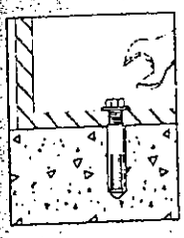

If using a fixture, position it, insert bolt and tighten. Most overhead applications utilize threaded rod. Minimum thread engagement should be at least one anchor diameter.

Carbon Steel Dropin™, *Zinc Plated*

ITEM CODE	ROD/ANCHOR DIA.	OVERALL LENGTH	THREAD LENGTH	BOX QTY.	CARTON QTY.
POW 06304	1/4"	1"	7/16"	100	1000
POW 06306	3/8"	1-9/16"	5/8"	50	500
POW 06308	1/2"	2"	13/16"	50	250
POW 06320	5/8"	2-1/2"	1-3/16"	25	125
POW 06312	3/4"	3-3/16"	1-3/8"	10	50

ITEM CODE	BULK QTY.
TB-500	1000
TB-502	500
TB-504	250

Stainless Steel Dropin™ *Type 303*

ITEM CODE	ROD/ANCHOR DIA.	OVERALL LENGTH	THREAD LENGTH	BOX QTY.	CARTON QTY.
POW 06204	1/4"	1"	7/16"	100	1000
POW 06206	3/8"	1-9/16"	5/8"	50	500
POW 06208	1/2"	2"	13/16"	50	250
POW 06210	5/8"	2-1/2"	1-3/16"	25	125
POW 06212	3/4"	3-3/16"	1-3/8"	10	50

Stainless Steel Dropin™ *Type 316*

ITEM CODE	ROD/ANCHOR DIA.	OVERALL LENGTH	THREAD LENGTH	BOX QTY.	CARTON QTY.
POW 06224	1/4"	1"	7/16"	100	1000
POW 06226	3/8"	1-9/16"	5/8"	50	500
POW 06228	1/2"	2"	13/16"	50	250
POW 06230	5/8"	2-1/2"	1-3/16"	25	125
POW 06232	3/4"	3-3/16"	1-3/8"	10	50

Dropin™ *Carbon Steel Flanged (Lipped), Zinc Plated*

ITEM CODE	ROD/ANCHOR DIA.	OVERALL LENGTH	THREAD LENGTH	BOX QTY.	CARTON QTY.
POW 06324	1/4"	1"	7/16"	100	1000
POW 06326	3/8"	1-9/16"	5/8"	50	500
POW 06328	1/2"	2"	13/16"	50	250

Setting Tools for Steel Dropin™

ITEM CODE	ROD/ANCHOR DIA.	BOX QTY.	CARTON QTY.
POW 06305	1/4"	1	250
POW 06307	3/8"	1	100
POW 06309	1/2"	1	100
POW 06311	5/8"	1	50
POW 06313	3/4"	1	25

ANCHORS

Tanner BOLT & NUT CORP.

Contractor:	Total Electrical Construction Co., Inc.		
Date:	10/13/09		
Project:	WO#12 – South Wing Emergency Stair Repair		
Contract:	BT-200.200		
Item:	Threaded Rod		
Spec Section:	16190 – Supporting Devices		
Page:	16190-6		
Paragraph:	2.04		
Drawing No.:	-		
Submittal No.:	16190-10	**Rev:**	1
Approved By:	Michael Lipari		

Note:

For work inside stair halls only.
1" conduit is maximum size used.

THE PORT AUTHORITY OF NY & NJ

( ) APPROVED
(X) APPROVED AS CORRECTED
( ) NOT APPROVED

16190-010
200.200 W.O. 12

APPROVAL IS ONLY FOR CONFORMANCE WITH THE DESIGN CONCEPT OF THE PROJECT AND COMPLIANCE WITH THE INFORMATION GIVEN IN THE CONTRACT DOCUMENTS. CONTRACTOR IS RESPONSIBLE FOR CONFORMING AND CORRELATING ALL DIMENSIONS AT THE JOB SITE FOR OPERATIONS THAT PERTAIN TO THE FABRICATION PROCESSES OR TO TECHNIQUES OF CONSTRUCTION AND FOR COORDINATION OF THE WORK OF ALL TRADES.

The Port Authority of NY & NJ
Engineering Department

Date: 11-12-09 By: J. Wandelowski
Senior Structual Engineer

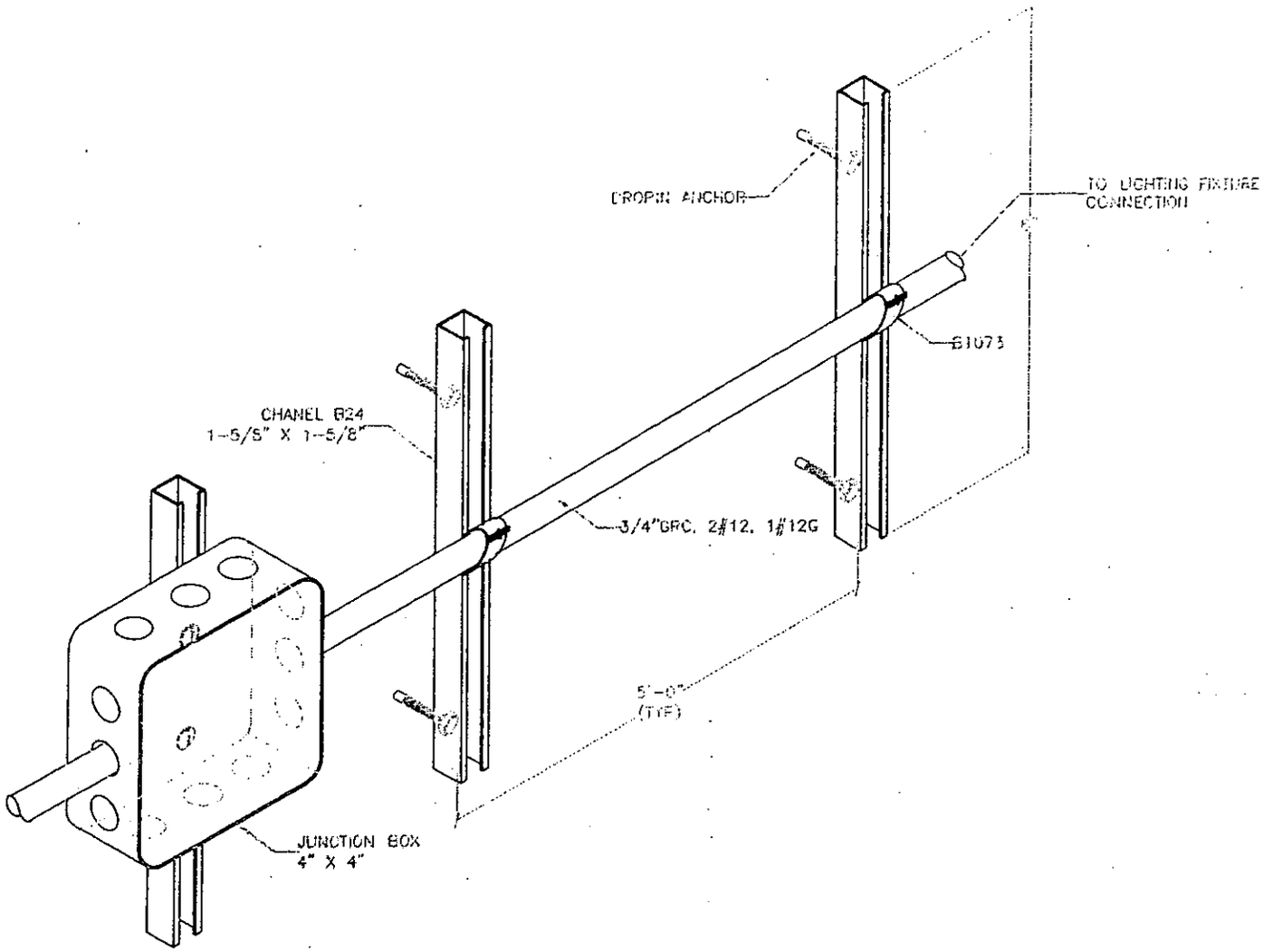

TOTAL ELECTRICAL
CONTRACTING CORPORATION
230 GREEN STREET
GREENPOINT, NY 11222

PROJECT NAME:	WO #12 SOUTH WING EMERGENCY STAIR REPAIR
TITLE	STAIRWAY CONDUIT SUPPORT

DRAWN BY:	CHECKED BY:	DESIGN:	DWG NO.
I.A.	M.L.	M.S.	SKETCH

SCALE: N.T.S.	DATE: 09.24.09	SHEET 1 OF 1	REV

Threaded Rod Steel

Tanner BOLT NUT CORP.

size as needed

Threaded Rod Steel

Threaded rod is produced from cold-rolled steel. Rolled threads offer increased strength, uniform accuracy and a higher degree of surface finish than machine-cut threads, in addition to being lower cost.
Threaded rod can be used with standard nuts and washers (sold separately), and may be used in standard stock lengths or cut by customer to the length required.

Special order lengths are available, contact your Tanner sales representative

Galvanized or plated steel

Threaded Rod Steel *6' Lengths*

DIAMETER	ITEM CODE ZINC PLATED	ITEM CODE HOT DIP GALVANIZED
1/4"-20	25C7200RATZ	25C7200RATH
5/16"-18	31C7200RATZ	31C7200RATH
3/8"-16	37C7200RATZ	37C7200RATH
1/2"-13	50C7200RATZ	50C7200RATH
5/8"-11	62C7200RATZ	62C7200RATH
3/4"-10	75C7200RATZ	75C7200RATH
7/8"-9	87C7200RATZ	87C7200RATH
1"-8	100C7200RATZ	100C7200RATH
1-1/4"-7	125C7200RATZ	125C7200RATH
1-1/2"-6	150C7200RATZ	150C7200RATH

Bundle Quantities & Weights - 6' Lengths

DIAMETER	[illegible]	[illegible]	[illegible]	[illegible]
1/4"-20	12	50	300	36
5/16"-18	20	35	210	42
3/8"-16	29	25	150	43.5
1/2"-13	54	12	72	39
5/8"-11	83	8	48	40
3/4"-10	125	5	30	37.5
7/8"-9	170	4	24	41
1"-8	223	2	12	27
1-1/4"-7	354	2	12	42
1-1/2"-6	512	1	6	30

Rod Coupling Nuts

Rod Coupling Nuts

Rod Coupling Nuts have extended length for joining two pieces of rod firmly together. Reducing Coupling Nuts are used to connect two threaded with different thread sizes. Each size is threaded approximately halfway through.

Rod Coupling Nuts *Steel Zinc Plated*

ITEM CODE	THREAD SIZE	OVERALL LENGTH	HEX SIZE	BOX QTY
25CNCOZ	1/4-20"	7/8"	3/8"	100
31CNCOZ	5/16"-18	1-1/8"	1/2"	100
37CNCOZ/SH	3/8"-16	1-1/8"	5/8"	50
37CNCOZ	3/8"-16	1-3/4"	5/8"	50
50CNCOZ	1/2"-13	1-3/4"	5/8'	50
62CNCOZ	5/8"-11	2-1/8"	13/16"	25
75CNCOZ	3/4"-10	2-1/4"	1"	25
87CNCOZ	7/8"-9	2-1/2"	1-1/4"	15
100CNCOZ	1"-8	2-3/4"	1-1/4"	10

• *Hot Dip Galvanized parts available upon request.*

Reducing Rod Coupling Nuts *Steel Zinc Plated*

MI R36	1/4"-20 to 3/8"-16	1"	1/2"	100
MI R37	1/4"-20 to 1/2"-13	1-1/4"	1/2"	50
MI R38	5/16"-18 to 3/8"-16	1"	1/2"	100
MI R39	5/16"-18 to 1/2"-13	1-1/4"	5/8"	50
MI R40	3/8"-16 to 1/2"-13	1-1/4"	5/8"	50
MI R41	3/8"-16 to 5/8"-11	1-1/2"	3/4"	50
MI R43	1/2"-13 to 5/8"-11	1-1/2"	3/4"	50
MI R44	3/8"-16 to 3/4"-10	2"	7/8"	25
MI R45	1/2"-13 to 3/4"-10	2"	7/8"	25
MI R46	5/8"-11 to 3/4"-10	2"	7/8"	25
MI R47	3/4"-10 to 7/8"-9	1-3/4"	1-1/4"	25

Please see Page 43 for Tanner's Bucket of Bolts!

THE PORT AUTHORITY OF NY & NJ

2 Gateway Center
Newark, NJ 07102
Phone: 973-792-4629

TRANSMITTAL

No. 00033

AUG 21 2009

PROJECT: WO12 South Wing Emerg. Stair Repairs

DATE: 8/19/2009

TO: VRH Construction Corp.
c/o Port Authority of NY & NJ
625 Eight Ave. 2nd Flr. North Bldg
New York, NY 10018

Contract No: PABT-200.200 WO12

ATTN: **Anthony Carnabuci**

WE ARE SENDING:	STATUS LEGEND:		SUBMITTED FOR:
☐ Shop Drawings	Approved (APP)	New Item (NEW)	☐ Approval
☐ Letter	Approved as Corrected (AAC)	Not Approved (NA)	☐ Your Use
☐ Prints	Approved as Noted (AAN)	Not Reviewed (NR)	☑ As Requested
☐ Change Order	For Record Only (FRO)	Review With Comments (RWC)	☐ Review and Comment
☐ Plans	For Your Information (FYI)	Review With No Comments (RWNC)	
☐ Samples	Incomplete (INC)	Superseded (SUPS)	
☐ Specifications	**SENT VIA:**		**DUE DATE:**
☑ Other: Made from Submittal	☑ Attached ☐ Separate Cover Via: Mail		

PACKAGE	SUBMITTAL	DWG. #	REV.	COPIES	DATE	DESCRIPTION	STATUS
16190	16190-0001		R000	2	8/19/2009	Dwg: Title: Channel Desc: Channel	NA
16190	16190-0002		R000	2	8/19/2009	Dwg: Title: Pipe Clamps Desc: Pipe Clamps	NA
16190	16190-0003		R000	2	8/19/2009	Dwg: Title: Spring Nuts Desc: Spring Nuts	NA
16190	16190-0004		R000	2	8/19/2009	Dwg: Title: Machine Screws Desc: Machine Screws	NA
16190	16190-0005		R000	2	8/19/2009	Dwg: Title: Sheet Metal Screws Desc: Sheet Metal Screws	NA
16190	16190-0006		R000	2	8/19/2009	Dwg: Title: Stud Bolt Anchors Desc: Stud Bolt Anchors	NA
16190	16190-0007		R000	2	8/19/2009	Dwg: Title: Toggle Bolts Desc: Toggle Bolts	NA
16190	16190-0008		R000	2	8/19/2009	Dwg: Title: Double Expansion Anchors Desc: Double Expansion Anchors	NA
16190	16190-0009		R000	2	8/19/2009	Dwg: Title: Drop-In Anchors Desc: Drop-In Anchors	NA

THE PORT AUTHORITY OF NY & NJ

2 Gateway Center
Newark, NJ 07102
Phone: 973-792-4629

TRANSMITTAL

No. 00033

PROJECT: WO12 South Wing Emerg. Stair Repairs
DATE: 8/19/2009

TO: VRH Construction Corp.
c/o Port Authority of NY & NJ
625 Eight Ave. 2nd Flr. North Bldg
New York, NY 10018

Contract No: PABT-200.200 WO12

ATTN: **Anthony Carnabuci**

WE ARE SENDING:	STATUS LEGEND:		SUBMITTED FOR:
☐ Shop Drawings	Approved (APP)	New Item (NEW)	☐ Approval
☐ Letter	Approved as Corrected (AAC)	Not Approved (NA)	☐ Your Use
☐ Prints	Approved as Noted (AAN)	Not Reviewed (NR)	☑ As Requested
☐ Change Order	For Record Only (FRO)	Review With Comments (RWC)	☐ Review and Comment
☐ Plans	For Your Information (FYI)	Review With No Comments (RWNC)	
☐ Samples	Incomplete (INC)	Superseded (SUPS)	
☐ Specifications	**SENT VIA:**		**DUE DATE:**
☑ Other: Made from Submittal	☑ Attached ☐ Separate Cover Via: Mail		

PACKAGE	SUBMITTAL	DWG. #	REV.	COPIES	DATE	DESCRIPTION	STATUS
16190	16190-0010		R000	2	8/19/2009	Dwg: Title: Threaded Rod Desc: Threaded Rod	NA

Remarks:

Please see attached stamped sheets for comments/corrections.

Also, please note that submittal #16110-0002 R000 from your submittal package transmittal #00018 is still being reviewed and will be returned to you at a later date.

( ) Please make necessary corrections as noted, if any. Place approval form on original of each approved drawing or cut, insert date of approval within same and return _____ prints each. IT IS REQUESTEDTHAT THESE PRINTS BE RETURNED TO US WITHIN 5 DAYS.

( ) CLEAR TRANSPARENCY REQUIRED
The Contract required that the Contractor shall furnish to the engineer one set of drawings, all clearly revised, completed and brought up-to-date showing all of the permanent equipment, materials and construction as actually used.

Your earliest attention to these items would be greatly appreciated so as to avoid delay in the progress of the job.

CC: P. Salvatore (2 Copies), File (1 Copy)
Response to VRH Construction Corp., Transmittal #00018

Very Truly Yours,
Signed: _____
Ka-Kei Chan

Contractor:	Total Electrical Construction Co., Inc.
Date:	06/19/09
Project:	WO#12 – South Wing Emergency Stair Repair
Contract:	BT-200.200
Item:	Channel
Spec Section:	16190 – Supporting Devices
Page:	16190-2
Paragraph:	2.02
Drawing No.:	-
Submittal No.:	16
Approved By:	Michael Lipari

THE PORT AUTHORITY OF NY & NJ

( ) APPROVED

( ) [redacted]

[redacted] THE DESIGN CONCEPT OF

THE [redacted] INFORMATION GIVEN IN THE

CONTRACT [redacted] RESPONSIBLE FOR CONFIRMING

AND [redacted] THE SITE FOR OPERATIONS

THAT [redacted] TO THE TECHNIQUES

CONSTRUCTION AND [redacted] THE WORK OF ALL TRADES

The Port Authority of NY & NJ
Engineering Department

Date: 8-18-09 By: [signature]
Senior Engineer/Architect

A. G. CONSTRUCTION ENGINEERING

FILE NO. 12-16

X CONFORMS

__ CONFORMS AS NOTED

__ REVISE AS NOTED / RESUBMIT

__ REJECTED / RESUBMIT

__ REVIEW NOT REQUIRED

BY [signature]

DATE 8-18-09

REVIEWED FOR GENERAL CONFORMANCE WITH THE DESIGN CONCEPT. CONTRACTOR IS RESPONSIBLE FOR DIMENSIONS, QUANTITIES AND COORDINATION WITH OTHER TRADES. CONSULTANTS NOTATIONS SUBMITTAL IS NOT TO BE CONSTRUED AS AN AUTHORIZATION FOR WORK OR COST.

16190-01
200.200 W.O. #12

Structural Comments

1. Refer to Structural Notes 5, 6, 7, 8, 10 on drawing G003 and provide shop drawings including details and layout for support types and calculations as indicated.
2. Resubmit components vendor catalog cuts (along with shop drawings and calculations) marked-up to indicate specific model, type, diameter, finish, etc. and referencing the specific shop drawings and support assembly detail/section.

BL2R

STRUT SYSTEMS

ENGINEERING CATALOG

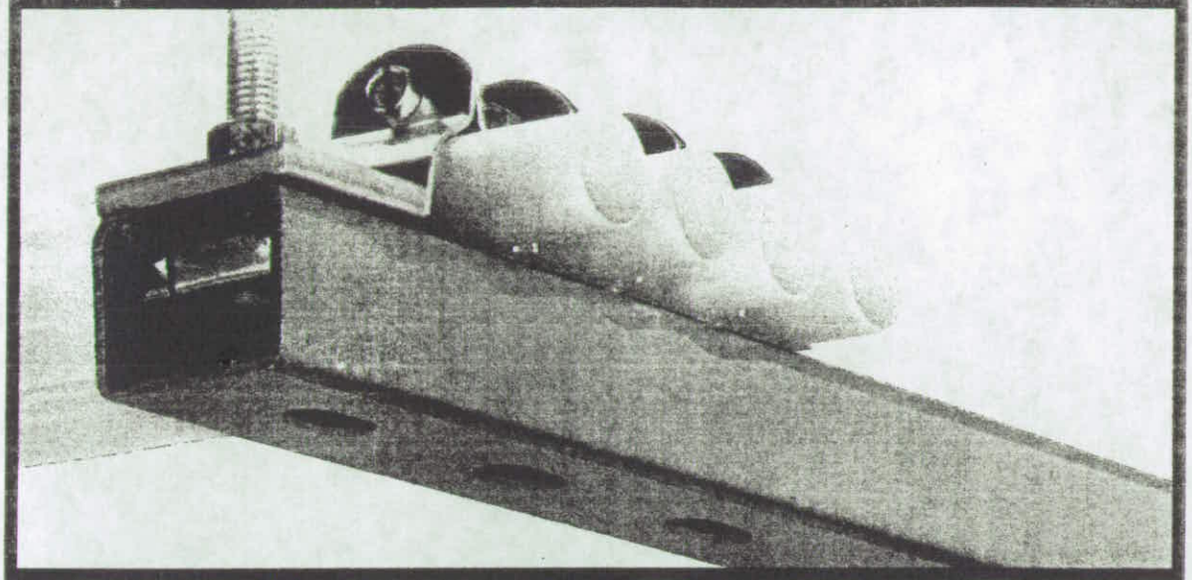

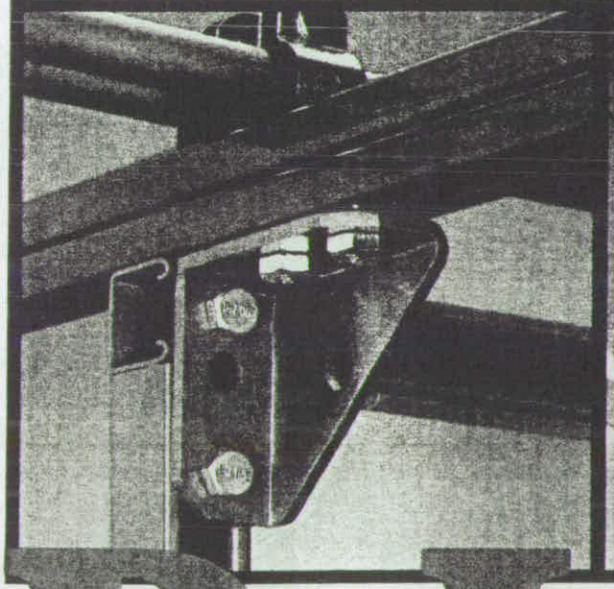

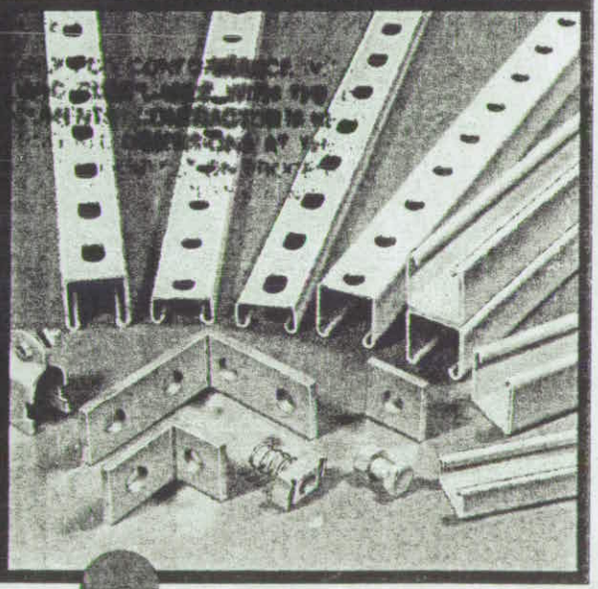

B-Line®

Channel

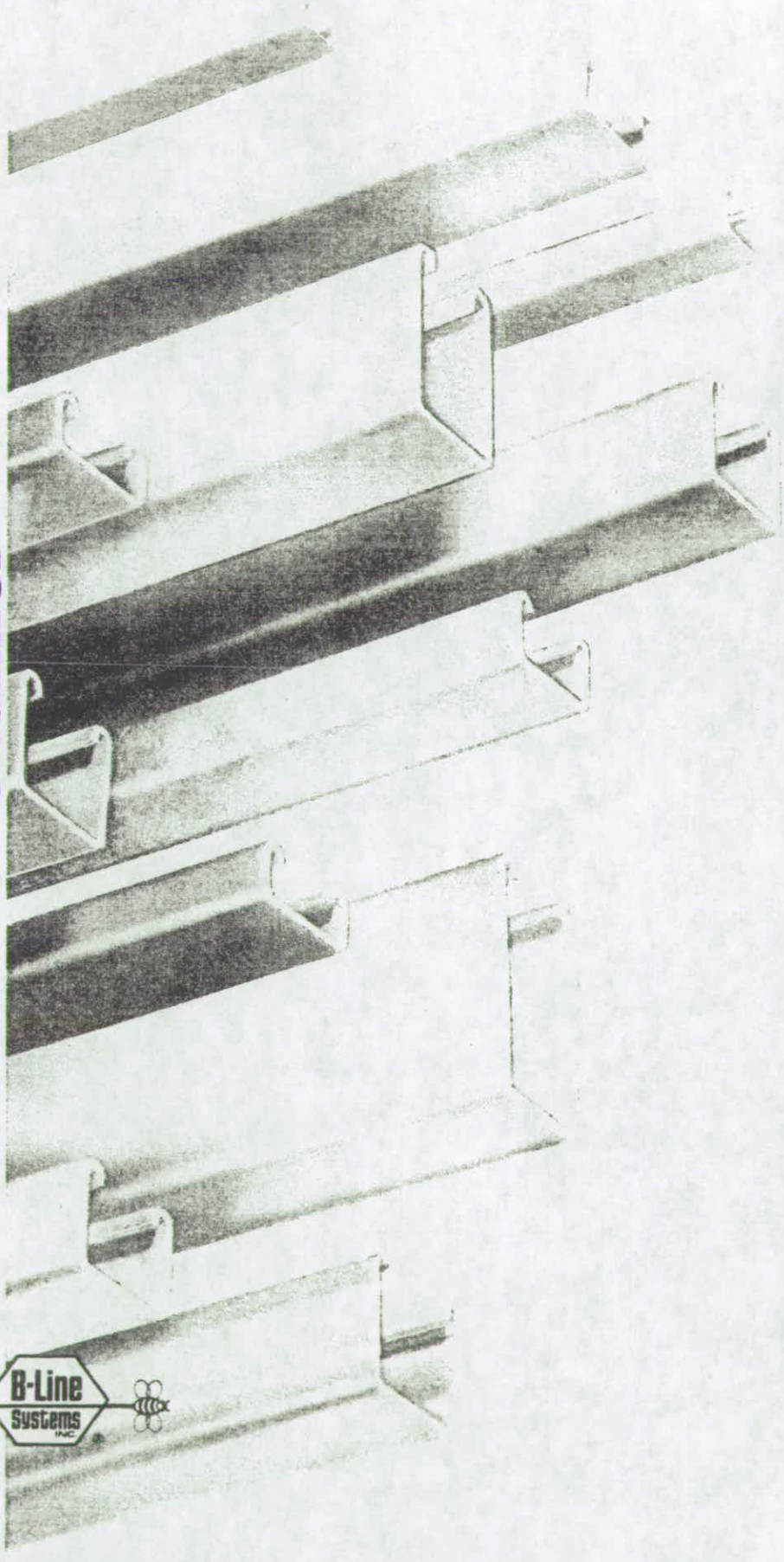

METAL FRAMING CHANNELS

Channel

B-Line's metal framing channel is cold formed on our modern rolling mills from 12 Ga. (2.6), 14 Ga. (1.9), and 16 Ga. (1.5) low carbon steel strips. A continuous slot with inturned lips provides the ability to make attachments at any point.

Materials

Steel: Plain

12 Ga. (2.6), 14 Ga. (1.9) and 16 Ga. (1.5) ASTM A570, Grade 33

Steel: Pre-galvanized
ASTM A446, Grade A.

Lengths

Standard lengths are 10' (3.05m) and 20' (6.09m) with length tolerance of +1/8" (+3.2mm). Custom lengths are available upon request.

Finishes

Standard finishes are: plain steel (oil coated); our exclusive Dura-Green epoxy paint (Federal Specification TT-C-490B) and pre-galvanized finish (ASTM A525 coating G90). Hot dip galvanized after fabrication (ASTM A123) and other custom coatings are available.

Welding

Weld spacing is maintained between 2 1/2 inches (63.5mm) and 3 inches (76.2mm) on center. Through high quality control testing of welded channels and continuous monitoring of welding equipment, B-Line provides the most consistent combination channels available today.

Lengths

Metric dimensions are shown in parentheses or in shaded areas of charts. Unless noted, all metric dimensions are in millimeters.

Recommended Bolted Metal Framing Specification

The bolted metal framing system shall be made of channel, fittings, and hardware as defined in the Metal Framing Manufacturers Association Standard Publication MFMA-1.

MATERIAL AND FINISHES

Aluminum

Aluminum channel and closure strips shall be extruded from Aluminum Association Alloy 6063-T6. Fabricated parts shall be made from Alloy 5052-H32.

Pre-Galvanized Steel

Pre-galvanized channel shall be made from steel in accordance with ASTM A446, Grade A and mill-galvanized in accordance with ASTM A525, Coating Designation G90.

Hot-Dip Galvanized After Fabrication Steel

Channels Hot-Dip Galvanized After Fabrication shall be made from steel meeting the minimum requirements of ASTM A570, Grade 33. Eighteen gauge (1.2 mm) and lighter channel shall be ASTM A611, Grade C steel. Channels shall be Hot-Dip Galvanized After Fabrication in accordance with ASTM A123. All 1/4" (6.3) fittings shall be formed from ASTM A635 steel and Hot-Dip Galvanized After Fabrication in accordance with ASTM A123.

Stainless Steel

Stainless Steel Channel and accessories shall be of AISI Type 304 or Type 316 Stainless Steel.

Green Epoxy

Painted channel shall meet the minimum mechanical properties of ASTM A570 Grade 33 steel and painted with electrodeposited, epoxy base dark green paint. All 1/4" (6.3) accessories shall be produced from ASTM A635 steel and painted with electrodeposited, epoxy base dark green paint.

Electro-Plated Zinc.

Electro-Plated Zinc finish on fittings and hardware shall be plated after fabrication in accordance with ASTM B633, SC3 or SC1 respectively.

Dimensions

Metal Framing Channel shall be cold formed from 12 Ga. (2.6), 14 Ga. (1.9), or 16 Ga. (1.5) steel. All channels shall have a nominal overall width of 1 5/8" (41.3) and have a 7/8" (22.2) slot face opening. Standard lengths are to be 10 (3.05m) and 20 (6.09m) foot. All testing and tolerancing shall be in accordance with the latest MFMA-1 Standard.

SELECTION CHART
for Channels, Materials and Hole Patterns

Channel Type	Channel Dimensions				Material & Thickness *				Channel Hole Pattern **				
	Height		Width		Steel 1	Alum. 2	Stainless Steel Type 304 3	Stainless Steel Type 316 4	SH	S	H17/8	TH	KO6
B11	3 1/4"	(82.5)	1 5/8"	(41.3)	12 Ga.	--	--	--	1	1	1	--	1
B12	2 7/16"	(61.9)	1 5/8"	(41.3)	12 Ga.	.105	--	--	1 2	1	1 2	--	1 2
B22	1 5/8"	(41.3)	1 5/8"	(41.3)	12 Ga.	.105	12 Ga.	12 Ga.	1 2 3	1	1 2 3	1	1 2
B24	1 5/8"	(41.3)	1 5/8"	(41.3)	14 Ga.	.080	14 Ga.	14 Ga.	1 2 3 4	1	1 2 3 4	--	1 2
B26	1 5/8"	(41.3)	1 5/8"	(41.3)	16 Ga.	--	--	--	1	1	1	--	1
B32	1 3/8"	(34.9)	1 5/8"	(41.3)	12 Ga.	--	12 Ga.	--	1 3	1	1 3	--	1
B42	1"	(25.4)	1 5/8"	(41.3)	12 Ga.	--	12 Ga.	--	1 3	1	1 3	--	1
B52	13/16"	(20.6)	1 5/8"	(41.3)	12 Ga.	--	12 Ga.	--	1 3	1	1 3	--	1
B54	13/16"	(20.6)	1 5/8"	(41.3)	14 Ga.	.080	14 Ga.	14 Ga.	1 2 3 4	1	1 2 3 4	--	1 2
B56	13/16"	(20.6)	1 5/8"	(41.3)	16 Ga.	--	--	--	1	1	1	--	1
B62	13/16"	(20.6)	13/16"	(20.6)	18 Ga.	--	--	--	--	--	--	--	--
B72	13/32"	(10.3)	13/16"	(20.6)	18 Ga.	--	--	--	--	--	--	--	--
E7016	3/4"	(19.0)	5/8"	(15.9)	16 Ga.	--	--	--	--	--	--	--	--

The selection has been prepared to provide a reference for available channel, materials and hole patterns. Material types available for various hole patterns are defined by numbers 1 thru 4.

Some stainless steel channels with hole patterns are available on special order only.

***Metric equivalent for thicknesses shown in chart.**
12 Ga. = 2.6 mm
14 Ga. = 1.9 mm
16 Ga. = 1.5 mm
18 Ga. = 1.2 mm
.105 = 2.6 mm
.080 = 2.0 mm

**** 1 - Steel**
2 - Aluminum
3 - Type 304 Stainless Steel
4 - Type 316 Stainless Steel

Properties may vary due to commercial tolerances of the material.

B-LINE DURA-GREEN® EPOXY FINISH

Dura-Green is water borne epoxy resin paint permanently bonded to all metal surfaces by a cathodic electro-deposition process. There is no special ordering—it's standard.

This process deposits an organic epoxy finish on negatively charged metal parts immersed in tanks containing positively charged epoxy paint particles. There is total coverage, no excess buildup of paint, no flaking and no discoloration of the finish.

Size as Needed

CHANNEL HOLE PATTERN

B11SH THRU B56SH — SH TYPE CHANNEL

Part No.	Thickness		Height "H" In.	Height "H" mm.	Weight Lbs./Ft.	Weight kg/m
B11SH	12 Ga.	(2.6)	3¼"	(82.5)	2.97	(4.42)
B12SH	12 Ga.	(2.6)	2⁷⁄₁₆"	(61.9)	2.39	(3.55)
B22SH	12 Ga.	(2.6)	1⅝"	(41.3)	1.82	(2.71)
B24SH	14 Ga.	(1.9)	1⅝"	(41.3)	1.34	(1.99)
B26SH	16 Ga.	(1.5)	1⅝"	(41.3)	1.07	(1.59)
B32SH	12 Ga.	(2.6)	1⅜"	(34.9)	1.62	(2.41)
B42SH	12 Ga.	(2.6)	1"	(25.4)	1.36	(2.02)
B52SH	12 Ga.	(2.6)	¹³⁄₁₆"	(20.6)	1.19	(1.77)
B54SH	14 Ga.	(1.9)	¹³⁄₁₆"	(20.6)	.91	(1.35)
B56SH	16 Ga.	(1.5)	¹³⁄₁₆"	(20.6)	.80	(1.19)

For Beam Loads use 90% of Channel Loading Chart.

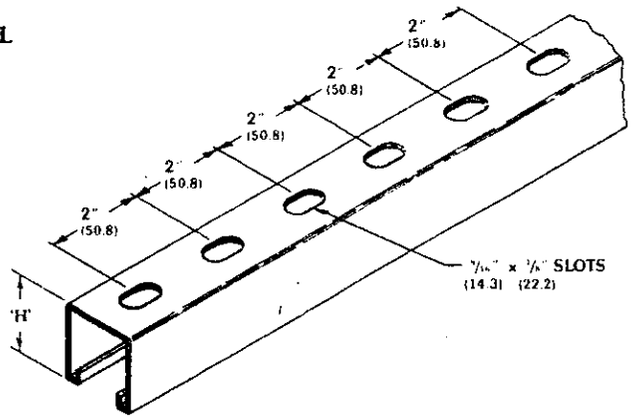

B11S THRU B56S — S TYPE CHANNEL

Part No.	Thickness		Height "H" In.	Height "H" mm.	Weight Lbs./Ft.	Weight kg/m
B11S	12 Ga.	(2.6)	3¼"	(82.5)	2.94	(4.37)
B12S	12 Ga.	(2.6)	2⁷⁄₁₆"	(61.9)	2.36	(3.51)
B22S	12 Ga.	(2.6)	1⅝"	(41.3)	1.79	(2.66)
B24S	14 Ga.	(1.9)	1⅝"	(41.3)	1.32	(1.96)
B26S	16 Ga.	(1.5)	1⅝"	(41.3)	1.06	(1.58)
B32S	12 Ga.	(2.6)	1⅜"	(34.9)	1.59	(2.36)
B42S	12 Ga.	(2.6)	1"	(25.4)	1.33	(1.98)
B52S	12 Ga.	(2.6)	¹³⁄₁₆"	(20.6)	1.16	(1.72)
B54S	14 Ga.	(1.9)	¹³⁄₁₆"	(20.6)	.89	(1.32)
B56S	16 Ga.	(1.5)	¹³⁄₁₆"	(20.6)	.79	(1.17)

For Beam Loads use 90% of Channel Loading Chart.

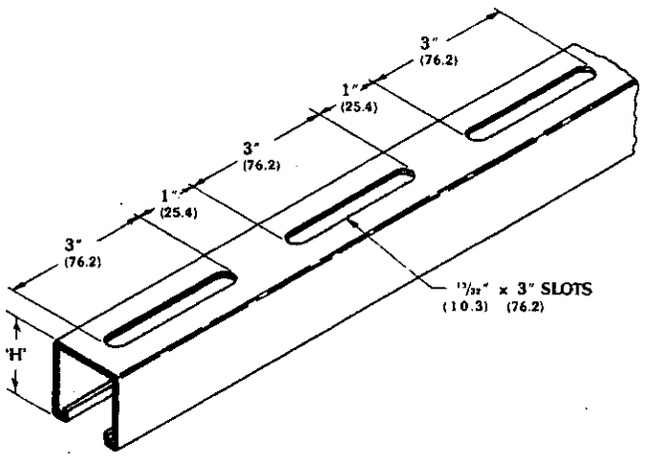

B11H-1 7/8 THRU B56H-1 7/8 — H-1 7/8 TYPE CHANNEL

Part No.	Thickness		Height "H" In.	Height "H" mm.	Weight Lbs./Ft.	Weight kg/m
B11H17/8	12 Ga.	(2.6)	3¼"	(82.5)	3.00	(4.46)
B12H17/8	12 Ga.	(2.6)	2⁷⁄₁₆"	(61.9)	2.42	(3.60)
B22H17/8	12 Ga.	(2.6)	1⅝"	(41.3)	1.85	(2.75)
B24H17/8	14 Ga.	(1.9)	1⅝"	(41.3)	1.36	(2.02)
B26H17/8	16 Ga.	(1.5)	1⅝"	(41.3)	1.09	(1.62)
B32H17/8	12 Ga.	(2.6)	1⅜"	(34.9)	1.65	(2.45)
B42H17/8	12 Ga.	(2.6)	1"	(25.4)	1.39	(2.07)
B52H17/8	12 Ga.	(2.6)	¹³⁄₁₆"	(20.6)	1.22	(1.81)
B54H17/8	14 Ga.	(1.9)	¹³⁄₁₆"	(20.6)	.93	(1.38)
B56H17/8	16 Ga.	(1.5)	¹³⁄₁₆"	(20.6)	.82	(1.22)

For Beam Loads use 90% of Channel Loading Chart.

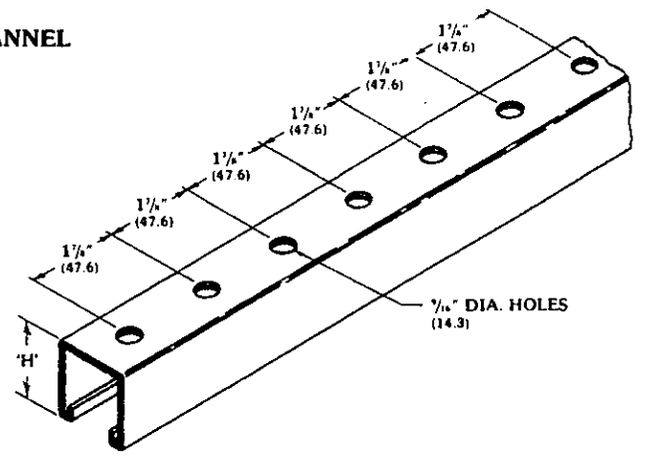

STANDARD FINISHES: Plain Steel (oil coated), Dura-Green or Pre-Galvanized.
STANDARD LENGTHS: 10' (3.05 m) & 20' (6.09 m)

Contractor:	Total Electrical Construction Co., Inc.
Date:	06/19/09
Project:	WO#12 – South Wing Emergency Stair Repair
Contract:	BT-200.200
Item:	Pipe Clamps
Spec Section:	16190 – Supporting Devices
Page:	16190-2
Paragraph:	2.02
Drawing No.:	-
Submittal No.:	16190-02 Rev:
Approved By:	Michael Lipari

THE PORT AUTHORITY OF NY & NJ
( ) APPROVED
( ) APPROVED AS CORRECTED
(X) NOT APPROVED
APPROVAL IS ONLY FOR CONFORMANCE WITH THE DESIGN CONCEPT OF THE PROJECT AND COMPLIANCE WITH THE INFORMATION GIVEN IN THE CONTRACT DOCUMENTS. CONTRACTOR IS RESPONSIBLE FOR CONFIRMING AND CORRELATING ALL DIMENSIONS AT THE JOB SITE FOR OPERATIONS THAT PERTAIN TO THE FABRICATION PROCESS OR TO THE TECHNIQUES OF CONSTRUCTION AND FOR COORDINATION OF THE WORK OF ALL TRADES.
The Port Authority of NY & NJ
Engineering Department
Date: 6-18-09 By: [signature]
Senior Engineer/Architect

A. G. CONSULTING ENGINEERING
FILE NO. [illegible]
__ CONFORMS
__ CONFORMS AS NOTED
__ REVISE AS NOTED & RESUBMIT
__ REJECTED. RESUBMIT
__ REVIEW NOT REQUIRED
BY [illegible]
DATE [illegible]
REVIEWED FOR GENERAL CONFORMANCE WITH THE DESIGN CONCEPT ONLY. CONTRACTOR IS RESPONSIBLE FOR DIMENSIONS, QUANTITIES AND COORDINATION WITH OTHER TRADES. CONSULTANTS NOTATIONS ON THE SUBMITTAL IS NOT TO BE CONSTRUED AS AUTHORIZATION FOR ADDITIONAL COST.

16190-002
200.200 W.O.12

PIPE CLAMPS

size as Needed

B-Line Systems INC

Part No.	Use With EMT		Use With IP		'A'		'B'		'T'		Design Load* Lbs.	kN	Wt./C Lbs.	kg
B1071	3/8"	(10)	--	--	1 23/32"	(43.6)	19/32"	(15.1)	14 Ga.	(1.9)	300	(1.33)	9	(4.1)
B1072	1/2"	(15)	3/8"	(10)	1 27/32"	(46.8)	23/32"	(18.2)	14 Ga.	(1.9)	300	(1.33)	10	(4.5)
B1073	3/4"	(20)	1/2"	(15)	2 3/32"	(53.2)	15/16"	(23.8)	14 Ga.	(1.9)	400	(1.78)	11	(5.0)
B1074	1"	(25)	3/4"	(20)	2 3/8"	(60.3)	1 3/16"	(30.1)	14 Ga.	(1.9)	400	(1.78)	13	(5.9)
B1075	--	--	1"	(25)	2 9/16"	(65.1)	1 11/32"	(34.1)	14 Ga.	(1.9)	400	(1.78)	14	(6.3)
B1076	1 1/4"	(32)	--	--	2 25/32"	(70.6)	1 17/32"	(38.9)	14 Ga.	(1.9)	400	(1.78)	15	(6.8)
B1077	1 1/2"	(40)	1 1/4"	(32)	3 1/32"	(77.0)	1 3/4"	(44.4)	14 Ga.	(1.9)	400	(1.78)	17	(7.7)
B1078	--	--	1 1/2"	(40)	3 1/4"	(82.5)	1 15/16"	(49.2)	12 Ga.	(2.6)	600	(2.67)	26	(11.8)
B1079	2"	(50)	--	--	3 19/32"	(91.3)	2 7/32"	(56.3)	12 Ga.	(2.6)	600	(2.67)	28	(12.7)
B1080	--	--	2"	(50)	3 13/16"	(96.8)	2 13/32"	(61.1)	12 Ga.	(2.6)	600	(2.67)	30	(13.6)
B1081	2 1/2"	(65)	2 1/2"	(65)	4 3/8"	(111.1)	2 29/32"	(73.8)	12 Ga.	(2.6)	600	(2.67)	35	(15.9)
B1082	3"	(80)	3"	(80)	5 3/32"	(129.4)	3 17/32"	(89.7)	12 Ga.	(2.6)	600	(2.67)	41	(18.6)
B1083	3 1/2"	(90)	3 1/2"	(90)	5 23/32"	(145.2)	4 1/32"	(102.4)	11 Ga.	(3.0)	600	(2.67)	57	(25.8)
B1084	4"	(100)	4"	(100)	6 9/32"	(159.5)	4 17/32"	(115.1)	11 Ga.	(3.0)	600	(2.67)	63	(28.6)

* Vertical pull design load.

EMT - Thinwall Conduit
IP - Iron Pipe or Rigid Conduit

Includes Slotted Hex Head Machine Screw
For B1071 thru B1077 1/4"-20
For B1078 thru B1084 5/16"-18

MATERIAL:
12 Ga. (2.6) and 14 Ga. (1.9) ASTM A570 Grade 33
11 Ga. (3.0) ASTM A607 Grade 50

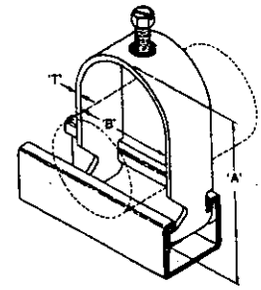

B1071 THRU B1084 ONE-PIECE PIPE CLAMP

Part No.	Use With EMT		Use With IP		Thickness		Design Load Lbs.	kN	Wt./C Lbs.	kg
B1508*	1/2"	(15)	--	--	16 Ga.	(1.5)	200	(.89)	7.4	(3.4)
B1512*	3/4"	(20)	1/2"	(15)	16 Ga.	(1.5)	200	(.89)	8.0	(3.6)
B1516*	1"	(25)	3/4"	(20)	14 Ga.	(1.9)	300	(1.33)	11.0	(5.0)
B1520*	1 1/4"	(32)	1"	(25)	14 Ga.	(1.9)	300	(1.33)	12.5	(5.7)
B1508S	1/2"	(15)	--	--	16 Ga.	(1.5)	200	(.89)	8.6	(3.9)
B1512S	3/4"	(20)	1/2"	(15)	16 Ga.	(1.5)	200	(.89)	9.2	(4.2)
B1516S	1"	(25)	3/4"	(20)	14 Ga.	(1.9)	300	(1.33)	12.7	(5.8)
B1520S	1 1/4"	(32)	1"	(25)	14 Ga.	(1.9)	300	(1.33)	14.6	(6.6)
B1524S	1 1/2"	(40)	1 1/4"	(32)	12 Ga.	(2.6)	400	(1.78)	20.5	(9.3)
B1532S	2"	(50)	1 1/2"	(40)	12 Ga.	(2.6)	400	(1.78)	21.5	(9.8)
B1534S	--	--	2"	(50)	12 Ga.	(2.6)	400	(1.78)	22.7	(10.3)
B1540S	2 1/2"	(65)	2 1/2"	(65)	12 Ga.	(2.6)	400	(1.78)	26.0	(11.9)
B1548S	3"	(80)	3"	(80)	12 Ga.	(2.6)	400	(1.78)	30.2	(13.7)
B1556S	3 1/2"	(90)	3 1/2"	(90)	12 Ga.	(2.6)	400	(1.78)	33.3	(15.1)
B1564S	4"	(100)	4"	(100)	12 Ga.	(2.6)	400	(1.78)	36.6	(16.6)

* NOTE: Clamps without saddle not recommended for flexible conduit or cable.

B1508 thru B1520

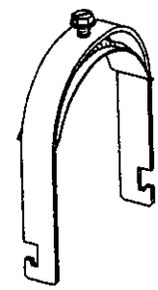

B1532S thru B1564S

Vertical pull design load.

EMT - Thinwall Conduit
IP - Iron Pipe or Rigid Conduit

All Sizes Include:
1/4"-20 Slotted Hex Head Machine Screw

MATERIAL:
12 Ga. (2.6), 14 Ga. (1.9) and
16 Ga. (1.5) ASTM A570 Grade 33

NEW

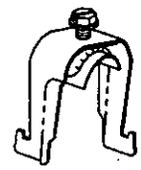

B1508S thru B1524S

B1508 THRU B1564S CONDUIT/STRUT CLAMPS

STANDARD FINISH: Electro-Plated

Contractor:	Total Electrical Construction Co., Inc.		
Date:	06/19/09		
Project:	WO#12 – South Wing Emergency Stair Repair		
Contract:	BT-200.200		
Item:	Spring Nuts		
Spec Section:	16190 – Supporting Devices		
Page:	16190-2		
Paragraph:	2.02		
Drawing No.:	-		
Submittal No.:	16190-03	**Rev:**	0
Approved By:	Michael Lipari		

THE PORT AUTHORITY OF NY & NJ
( ) APPROVED
( ) APPROVED AS CORRECTED
(X) NOT APPROVED
16190-003
200.200 W.O. 12
APPROVAL IS ONLY FOR [illegible] GIVEN IN THE CONTRACT DOCUMENTS. FOR CONFIRMING AND CORRELATING ALL [illegible] FOR OPERATIONS THAT PERTAIN TO THE [illegible] TECHNIQUES OF CONSTRUCTION AND FOR COORDINATION OF THE WORK OF ALL TRADES.
The Port Authority of NY & NJ
Engineering Department
Date: 8-19-09 By: [signature]

A. G. CONSULTING ENGINEERS, P.C.
FILE NO. 17016
— CONFORM
— CONFORMS AS NOTED
— REVISE AS NOTED & RESUBMIT
— REJECTED, RESUBMIT
— REVIEW NOT REQUIRED
BY
DATE
REVIEWED FOR GENERAL CONFORMANCE WITH THE DESIGN CONCEPT ONLY. CONTRACTOR IS RESPONSIBLE FOR DIMENSIONS, QUANTITIES AND COORDINATION WITH OTHER TRADES. CONSULTANTS NOTATIONS ON THE [illegible]TAL IS NOT TO BE CONSTRUED AS [illegible]ORIZATION FOR ADDITIONAL

Structural Comments

5. Refer to Structural Notes 5, 6, 7, 8, 10 on drawing G003 and provide shop drawings including details and layout for support types and calculations as indicated.
6. Resubmit components vendor catalog cuts (along with shop drawings and calculations) marked-up to indicate specific model, type, diameter, finish, etc. and referencing the specific shop drawings and support assembly detail/section.

CHANNEL NUTS & HARDWARE

NUTS FOR B11, B12 CHANNELS

Part Number			Thread Size	Thickness		Weight Per 100	
With Spring	Without Spring	Twirl Nut				Lbs.	kg
N721	N221WO	TN221	#8-32	1/4"	(6.3)	7.0	(3.17)
N722	N222WO	TN222	#10-24	1/4"	(6.3)	7.0	(3.17)
N727	N227WO	TN227	#10-32	1/4"	(6.3)	7.0	(3.17)
N724	N224WO	TN224	1/4-20	1/4"	(6.3)	6.7	(3.04)
N723	N223WO	TN223	5/16-18	1/4"	(6.3)	6.7	(3.04)
N728	N228WO	TN228	3/8-16	3/8"	(9.5)	9.3	(4.22)
N726	N226WO	TN226	7/16-14	3/8"	(9.5)	8.8	(3.99)
N725	N225WO	TN225	1/2-13	1/2"	(12.7)	11.6	(5.26)
N755	N255WO	–	5/8-11	1/2"	(12.7)	16.4	(7.44)
N775	N275WO	–	3/4-10	1/2"	(12.7)	14.5	(6.58)
N778	N278WO	–	7/8-9	1/2"	(12.7)	12.5	(5.67)

STANDARD FINISH: Electro-Plated

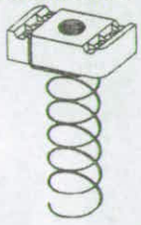

SPRING NUT

NUT WITHOUT SPRING

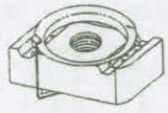

Patented

TWIRL-NUT ®

size as needed

STUD NUTS FOR B11, B12 CHANNELS

Part Number			Thread Size	Thickness		Stud Length		Weight Per 100	
With Spring	Without Spring	Twirl Nut						Lbs.	kg
SN724-3/4	SN224-3/4WO	STN224-3/4	1/4-20	1/4"	(6.3)	3/4	(19.0)	7.7	(3.49)
SN724-1	SN224-1WO	STN224-1				1	(25.4)	8.0	(3.63)
SN724-1 1/4	SN224-1 1/4WO	STN224-1 1/4				1 1/4	(31.7)	8.2	(3.72)
SN724-1 1/2	SN224-1 1/2WO	STN224-1 1/2				1 1/2	(38.1)	8.4	(3.81)
SN728-3/4	SN228-3/4WO	STN228-3/4	3/8-16	3/8"	(9.5)	3/4	(19.0)	12.0	(5.44)
SN728-1	SN228-1WO	STN228-1				1	(25.4)	12.6	(5.71)
SN728-1 1/4	SN228-1 1/4WO	STN228-1 1/4				1 1/4	(31.7)	13.2	(5.99)
SN728-1 1/2	SN228-1 1/2WO	STN228-1 1/2				1 1/2	(38.1)	13.8	(6.26)
SN725-3/4	SN225-3/4WO	STN225-3/4	1/2-13	1/2"	(12.7)	3/4	(19.0)	16.5	(7.48)
SN725-1	SN225-1WO	STN225-1				1	(25.4)	17.6	(7.98)
SN725-1 1/4	SN225-1 1/4WO	STN225-1 1/4				1 1/4	(31.7)	18.7	(8.48)
SN725-1 1/2	SN225-1 1/2WO	STN225-1 1/2				1 1/2	(38.1)	19.8	(8.98)

STANDARD FINISH: Electro-Plated

Other stud lengths available

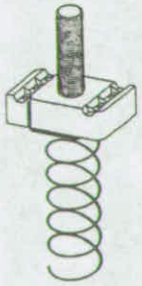

STUD NUT WITH SPRING

STUD NUT WITHOUT SPRING

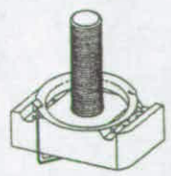

TWIRL STUD NUT

Contractor:	Total Electrical Construction Co., Inc.		
Date:	06/19/09		
Project:	WO#12 – South Wing Emergency Stair Repair		
Contract:	BT-200.200		
Item:	Machine Screws		
Spec Section:	16190 – Supporting Devices		
Page:	16190-6		
Paragraph:	2.04		
Drawing:	-		
Submittal:	16190-04	**Rev:**	0
Approved By:	Michael Lipari		

THE PORT AUTHORITY OF NY & NJ
( ) APPROVED
( ) APPROVED AS CORRECTED
(X) NOT APPROVED
APPROVAL IS ONLY FOR CONFORMANCE WITH THE DESIGN CONCEPT OF THE PROJECT AND COMPLIANCE WITH THE INFORMATION GIVEN IN THE CONTRACT DOCUMENTS. CONTRACTOR IS RESPONSIBLE FOR CONFIRMING AND CORRELATING ALL DIMENSIONS AT THE JOB SITE FOR OPERATIONS THAT PERTAIN TO THE FABRICATION PROCESS OR TO THE TECHNIQUES OF CONSTRUCTION AND FOR COORDINATION OF THE WORK OF ALL TRADES.
The Port Authority of NY & NJ
Engineering Department
By: _____
Senior Engineer/Architect
Date: 6-18-09

16190-04
200.200 W.O. #12

A. G. CONSULTING ENGINEERS
FILE NO. _____
— CONFORMS
— CONFORMS AS NOTED
— REVISE AS NOTED & RESUBMIT
— REJECTED, RESUBMIT
— REVIEW NOT REQUIRED
BY _____
DATE _____
REVIEWED FOR GENERAL CONFORMANCE WITH THE DESIGN CONCEPT ONLY. CONTRACTOR IS RESPONSIBLE FOR DIMENSIONS, QUANTITIES AND COORDINATION WITH OTHER TRADES. CONSULTANTS NOTATIONS ON THE MATERIAL IS NOT TO BE CONSTRUED AS AUTHORIZATION FOR ADDITIONAL WORK.

Structural Comments

3. Refer to Structural Notes 5, 6, 7, 8, 10 on drawing G003 and provide shop drawings including details and layout for support types and calculations as indicated.
4. Resubmit components vendor catalog cuts (along with shop drawings and calculations) marked-up to indicate specific model, type, diameter, finish, etc. and referencing the specific shop drawings and support assembly detail/section.

Machine Screws

Tanner BOLT NUT CORP.

Product Description

A Machine screw has a cylindrical shaft, threaded its entire length, and fits into a nut or a tapped hole. Several different head styles are offered. Round Combo are the same as round head except for the option of using either a slotted or Phillips screwdriver. A pan head screw protrudes above the surface of the material to be fastened. Flat head screws are countersunk into the material for a smooth surface area. Flat undercut heads are supplied to provide larger usable thread. Head height of undercut screws is approximately two-thirds that of standard screws. Drive depths are reduced proportionately.

Please see Page 43 for Tanner's Bucket of Bolts!

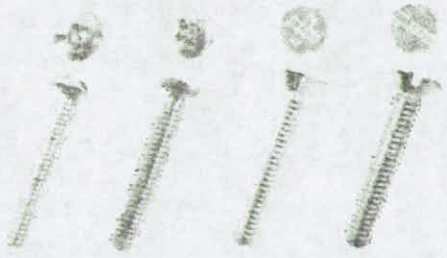

Machine Screws

Steel Zinc Plated

SIZE	ITEM CODE ROUND COMBO	ITEM CODE PAN PHILLIPS	ITEM CODE FLAT PHILLIPS	ITEM CODE FLAT SLOTTED
#6-32 x 3/16"	6C18MRCZ	6C18MPPZ		6C18MFSZ
#6-32 x 1/4"	6C25MRCZ	6C25MPPZ	6C25MFPZ	6C25MFSZ
#6-32 x 3/8"	6C37MRCZ	6C37MPPZ	6C37MFPZ	6C37MFSZ
#6-32 x 1/2"	6C50MRCZ	6C50MPPZ	6C50MFPZ	6C50MFSZ
#6-32 x 5/8"	6C62MRCZ	6C62MPPZ	6C62MFPZ	6C62MFSZ
#6-32 x 3/4"	6C75MRCZ	6C75MPPZ	6C75MFPZ	6C75MFSZ
#6-32 x 1"	6C100MRCZ	6C100MPPZ	6C100MFPZ	6C100MFSZ
#6-32 x 1-1/4"	6C125MRCZ	6C125MPPZ	6C125MFPZ	6C125MFSZ
#6-32 x 1-1/2"	6C150MRCZ	6C150MPPZ	6C150MFPZ	6C150MFSZ
#6-32 x 1-3/4"	6C175MRCZ	6C175MPPZ	6C175MFPZ	6C175MFSZ
#6-32 x 2"	6C200MRCZ	6C200MPPZ	6C200MFPZ	6C200MFSZ
#6-32 x 2-1/2"	6C250MRCZ			6C250MFSZ
#6-32 x 3"	6C300MRCZ			6C300MFSZ
#6-32 x 4"	6C400MRCZ			6C400MFSZ
#8-32 x 3/16"				8C18MFSZ
#8-32 x 1/4"		8C25MPPZ	8C25MFPZ	8C25MFSZ
#8-32 x 3/8"	8C37MRCZ	8C37MPPZ	8C37MFPZ	8C37MFSZ
#8-32 x 1/2"	8C50MRCZ	8C50MPPZ	8C50MFPZ	8C50MFSZ
#8-32 x 5/8"	8C62MRCZ	8C62MPPZ	8C62MFPZ	8C62MFSZ
#8-32 x 3/4"	8C75MRCZ	8C75MPPZ	8C75MFPZ	8C75MFSZ
#8-32 x 1"	8C100MRCZ	8C100MPPZ	8C100MFPZ	8C100MFSZ
#8-32 x 1-1/4"	8C125MRCZ	8C125MPPZ	8C125MFPZ	8C125MFSZ
#8-32 x 1-1/2"	8C150MRCZ	8C150MPPZ	8C150MFPZ	8C150MFSZ
#8-32 x 1-3/4"		8C175MPPZ		8C175MFSZ
#8-32 x 2"	8C200MRCZ	8C200MPPZ	8C200MFPZ	8C200MFSZ
#8-32 x 2-1/2"	8C250MRCZ	8C250MPPZ	8C250MFPZ	8C250MFSZ
#8-32 x 3"	8C300MRCZ	8C300MPPZ		8C300MFSZ
#8-32 x 4"	8C400MRCZ			8C400MFSZ
#10-24 x 1/4"		10C25MPPZ	10C25MFPZ	10C25MFSZ
#10-24 x 3/8"	10C37MRCZ	10C37MPPZ	10C37MFPZ	10C37MFSZ
#10-24 x 1/2"	10C50MRCZ	10C50MPPZ	10C50MFPZ	10C50MFSZ

Machine Screws *cont.*

SIZE	ITEM CODE ROUND COMBO	ITEM CODE PAN PHILLIPS	ITEM CODE FLAT PHILLIPS	ITEM CODE FLAT SLOTTED
#10-24 x 5/8"	10C62MRCZ	10C62MPPZ	10C62MFPZ	10C62MFSZ
#10-24 x 3/4"	10C75MRCZ	10C75MPPZ	10C75MFPZ	10C75MFSZ
#10-24 x 1"	10C100MRCZ	10C100MPPZ	10C100MFPZ	10C100MFSZ
#10-24 x 1-1/4"	10C125MRCZ	10C125MPPZ	10C125MFPZ	10C125MFSZ
#10-24 x 1-1/2"	10C150MRCZ	10C150MPPZ	10C150MFPZ	10C150MFSZ
#10-24 x 1-3/4"		10C175MPPZ	10C175MFPZ	10C175MFSZ
#10-24 x 2"	10C200MRCZ	10C200MPPZ	10C200MFPZ	10C200MFSZ
#10-24 x 2-1/2"	10C250MRCZ	10C250MPPZ		10C250MFSZ
#10-24 x 3"	10C300MRCZ			10C300MFSZ
#10-24 x 4"	10C400MRCZ			10C400MFSZ
#10-32 x 1/4"		10F25MPPZ	10F25MFPZ	10F25MFSZ
#10-32 x 3/8"	10F37MRCZ	10F37MPPZ	10F37MFPZ	10F37MFSZ
#10-32 x 1/2"	10F50MRCZ	10F50MPPZ	10F50MFPZ	10F50MFSZ
#10-32 x 5/8"	10F62MRCZ	10F62MPPZ	10F62MFPZ	10F62MFSZ
#10-32 x 3/4"	10F75MRCZ	10F75MPPZ	10F75MFPZ	10F75MFSZ
#10-32 x 1"	10F100MRCZ	10F100MPPZ	10F100MFPZ	10F100MFSZ
#10-32 x 1-1/4"	10F125MRCZ	10F125MPPZ	10F125MFPZ	10F125MFSZ
#10-32 x 1-1/2"	10F150MRCZ	10F150MPPZ	10F150MFPZ	10F150MFSZ
#10-32 x 1-3/4"		10F175MPPZ	10F175MFPZ	10F175MFSZ
#10-32 x 2"	10F200MRCZ	10F200MPPZ	10F200MFPZ	10F200MFSZ
#10-32 x 2-1/2"	10F250MRCZ	10F250MPPZ	10F250MFSZ	
#10-32 x 3"		10F300MPPZ		10F300MFSZ
#10-32 x 4"				10F400MFSZ
#12-24 x 1/2"				12C50MFSZ
#12-24 x 5/8"				12C75MFSZ
#12-24 x 3/4"				12C100MFSZ
#12-24 x 1"				12C125MFSZ
#12-24 x 1-1/2"				12C150MFSZ
#12-24 x 2"				12C200MFSZ
1/4"-20 x 3/8"	25C37MRCZ	25C37MPPZ	25C37MFPZ	25C37MFSZ
1/4"-20 x 1/2"	25C50MRCZ	25C50MPPZ	25C50MFPZ	25C50MFSZ
1/4"-20 x 5/8"	25C62MRCZ	25C62MPPZ	25C62MFPZ	25C62MFSZ
1/4"-20 x 3/4"	25C75MRCZ	25C75MPPZ	25C75MFPZ	25C75MFSZ
1/4"-20 x 1"	25C100MRCZ	25C100MPPZ	25C100MFPZ	25C100MFSZ
1/4"-20 x 1-1/4"	25C125MRCZ	25C125MPPZ	25C125MFPZ	25C125MFSZ
1/4"-20 x 1-1/2"	25C150MRCZ	25C150MPPZ	25C150MFPZ	25C150MFSZ
1/4"-20 x 1-3/4"		25C175MPPZ		25C175MFSZ
1/4"-20 x 2"	25C200MRCZ	25C200MPPZ	25C200MFPZ	25C200MFSZ
1/4"-20 x 2-1/2"	25C250MRCZ	25C250MPPZ	25C250MFPZ	25C250MFSZ
1/4"-20 x 3"	25C300MRCZ	25C300MPPZ	25C300MFPZ	25C300MFSZ
1/4"-20 x 3-1/2"	25C350MRCZ	25C350MPPZ	25C350MFPZ	25C350MFSZ
1/4"-20 x 4"	25C400MRCZ	25C400MPPZ	25C400MFPZ	25C400MFSZ
1/4"-20 x 5"	25C500MRCZ	25C500MPPZ	25C500MFPZ	25C500MFSZ
1/4"-20 x 6"	25C600MRCZ	25C600MPPZ	25C600MFPZ	25C600MFSZ
3/8"-16 x 3/4"	37C75MRCZ			37C75MFSZ
3/8"-16 x 1"	37C100MRCZ			37C100MFSZ
3/8"-16 x 1-1/4"	37C125MRCZ			37C125MFSZ
3/8"-16 x 1-1/2"	37C150MRCZ			37C150MFSZ
3/8"-16 x 2"	37C200MRCZ			37C200MFSZ
3/8"-16 x 2-1/2"				*37C250MFSZ
3/8"-16 x 3"	*37C300MRCZ			*37C300MFSZ
3/8"-16 x 4"	*37C400MRCZ			*37C400MFSZ
1/2"-13 x 1"				*50C100MFSZ
1/2"-13 x 1-1/2"				*50C150MFSZ
1/2"-13 x 2"				*50C200MFSZ
1/2"-13 x 3"				*50C300MFSZ

• *Note: All machine screws are packaged 100/bx, except * 50/box.*

4302 Glenwood Rd. Brooklyn, NY 11210
800 456-2658 Fax: 888 434-3215
718 434-4500 Fax: 718 434-3215 www.tannerbolt.com

Tanner BOLT NUT CORP.

Contractor:	Total Electrical Construction Co., Inc.		
Date:	06/19/09		
Project:	WO#12 – South Wing Emergency Stair Repair		
Contract:	BT-200.200		
Item:	Sheet Metal Screws		
Spec Section:	16190 – Supporting Devices		
Page:	16190-6		
Paragraph:	2.04		
Drawing:	N/A		
Submittal:	16190-05	**Rev:**	0
Approved:	Michael Lipari		

THE PORT AUTHORITY OF NY & NJ
( ) APPROVED
( ) APPROVED AS CORRECTED
(X) NOT APPROVED
APPROVAL IS ONLY FOR CONFORMANCE WITH THE DESIGN CONCEPT OF THE PROJECT AND COMPLIANCE WITH THE INFORMATION GIVEN IN THE CONTRACT DOCUMENTS. CONTRACTOR IS RESPONSIBLE FOR CONFIRMING AND CORRELATING ALL DIMENSIONS AT THE JOB SITE FOR OPERATIONS THAT PERTAIN TO THE FABRICATION PROCESS OR TO THE TECHNIQUES OF CONSTRUCTION AND FOR COORDINATION OF THE WORK OF ALL TRADES.
The Port Authority of NY & NJ
Engineering Department
By: _____
Senior Engineer/Architect
Date: 6-18-09

16190-005
200.200 W.O.12

A. G. [illegible]
FILE NO. 1.1.1
— CONFORMS
— CONFORMS AS NOTED
— REVISE AND RESUBMIT
— REJECTED [illegible]
— REVIEW NOT REQUIRED
BY _____
DATE 6-29-9
REVIEWED FOR GENERAL CONFORMANCE WITH THE DESIGN CONCEPT ONLY.
[illegible] IS RESPONSIBLE FOR QUANTITIES AND [illegible] THE [illegible] CONSTRUED AS [illegible] FOR ADDITIONAL

Structural Comments

5. Refer to Structural Notes 5, 6, 7, 8, 10 on drawing G003 and provide shop drawings including details and layout for support types and calculations as indicated.
6. Resubmit components vendor catalog cuts (along with shop drawings and calculations) marked-up to indicate specific model, type, diameter, finish, etc. and referencing the specific shop drawings and support assembly detail/section.

Sheet Metal Screws

Size as Needed

Tanner BOLT NUT CORP.

Product Description

Sheet metal screws/tapping screws are threaded fasteners with the unique ability to "tap" their own mating internal thread when driven into preformed holes in metallic and non-metallic materials. Sheet metal screws/tapping screws are high strength, one-piece, one-side-installation fasteners. Because they form or cut their own mating thread, there is unusually good thread fit, which enhances resistance to loosening in service. Sheet metal screws/tapping screws can be disassembled and are generally reusable.

Please see Page 43 for Tanner's Bucket of Bolts!

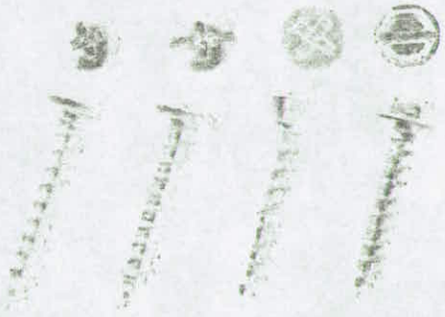

Sheet Metal Screws

Steel Zinc Plated

SIZE	ITEM CODE PAN PHILLIPS	ITEM CODE PAN COMBO	ITEM CODE FLAT PHILLIPS	ITEM CODE HEX WASHER SLOT
#4 x 1/4"	4N25TPPZ			
#4 x 3/8"	4N37TPPZ			
#4 x 1/2"	4N50TPPZ		4N50TFPZ	
#4 x 5/8"	4N62TPPZ		4N62TFPZ	
#4 x 3/4"	4N75TPPZ		4N75TFPZ	
#4 x 1"	4N100TPPZ		4N100TFPZ	
#6 x 1/4"	6N25TPPZ		6N25TFPZ	
#6 x 3/8"	6N37TPPZ	6N37TPCZ	6N37TFPZ	6N37THWSZ
#6 x 1/2"	6N50TPPZ	6N50TPCZ	6N50TFPZ	6N50THWSZ
#6 x 5/8"	6N62TPPZ	6N62TPCZ	6N62TFPZ	6N62THWSZ
#6 x 3/4"	6N75TPPZ	6N75TPCZ	6N75TFPZ	6N75THWSZ
#6 x 1"	6N100TPPZ	6N100TPCZ	6N100TFPZ	6N100THWSZ
#6 x 1-1/4"	6N125TPPZ	6N125TPCZ	6N125TFPZ	
#6 x 1-1/2"	6N150TPPZ	6N150TPCZ	6N150TFPZ	6N150THWSZ
#6 x 1-3/4"	6N175TPPZ	6N175TPCZ	6N175TFPZ	
#6 x 2"	6N200TPPZ	6N200TPCZ	6N200TFPZ	6N200THWSZ
#8 x 1/4"	8N25TPPZ			
#8 x 3/8"	8N37TPPZ	8N37TPCZ	8N37TFPZ	8N37THWSZ
#8 x 1/2"	8N50TPPZ	8N50TPCZ	8N50TFPZ	8N50THWSZ
#8 x 5/8"	8N62TPPZ	8N62TPCZ	8N62TFPZ	8N62THWSZ
#8 x 3/4"	8N75TPPZ	8N75TPCZ	8N75TFPZ	8N75THWSZ
#8 x 1"	8N100TPPZ	8N100TPCZ	8N100TFPZ	8N100THWSZ
#8 x 1-1/4"	8N125TPPZ	8N125TPCZ	8N125TFPZ	8N125THWSZ
#8 x 1-1/2"	8N150TPPZ	8N150TPCZ	8N150TFPZ	8N150THWSZ
#8 x 1-3/4"	8N175TPPZ		8N175TFPZ	8N175THWSZ
#8 x 2"	8N200TPPZ	8N200TPCZ	8N200TFPZ	8N200THWSZ
#8 x 2-1/2"	8N250TPPZ		8N250TFPZ	8N250THWSZ
#8 x 3"	8N300TPPZ		8N300TFPZ	8N300THWSZ
#8 x 3-1/2"			8N350TFPZ	

Sheet Metal Screws *cont.*

SIZE	ITEM CODE PAN PHILLIPS	ITEM CODE PAN COMBO	ITEM CODE FLAT PHILLIPS	ITEM CODE HEX WASHER SLOT
#10 x 3/8"	10N37TPPZ	10N37TPCZ	10N37TFPZ	
#10 x 1/2"	10N50TPPZ	10N50TPCZ	10N50TFPZ	10N50THWSZ
#10 x 5/8"	10N62TPPZ	10N62TPCZ	10N62TFPZ	10N62THWSZ
#10 x 3/4"	10N75TPPZ	10N75TPCZ	10N75TFPZ	10N75THWSZ
#10 x 1"	10N100TPPZ	10N100TPCZ	10N100TFPZ	10N100THWSZ
#10 x 1-1/4"	10N125TPPZ	10N125TPCZ	10N125TFPZ	10N125THWSZ
#10 x 1-1/2"	10N150TPPZ	10N150TPCZ	10N150TFPZ	10N150THWSZ
#10 x 1-3/4"	10N175TPPZ	10N175TPCZ	10N175TFPZ	10N175THWSZ
#10 x 2"	10N200TPPZ	10N200TPCZ	10N200TFPZ	10N200THWSZ
#10 x 2-1/2"	10N250TPPZ	10N250TPCZ	10N250TFPZ	10N250THWSZ
#10 x 3"	10N300TPPZ	10N300TPCZ	10N300TFPZ	10N300THWSZ
#10 x 3-1/2"			10N350TFPZ	
#10 x 4"			10N400TFPZ	
#12 x 1/2"	12N50TPPZ	12N50TPCZ	12N50TFPZ	12N50THWSZ
#12 x 5/8"	12N62TPPZ		12N62TFPZ	12N62THWSZ
#12 x 3/4"	12N75TPPZ	12N75TPCZ	12N75TFPZ	12N75THWSZ
#12 x 1"	12N100TPPZ	12N100TPCZ	12N100TFPZ	12N100THWSZ
#12 x 1-1/4"	12N125TPPZ	12N125TPCZ	12N125TFPZ	12N125THWSZ
#12 x 1-1/2"	12N150TPPZ	12N150TPCZ	12N150TFPZ	12N150THWSZ
#12 x 1-3/4"	12N175TPPZ	12N175TPCZ	12N175TFPZ	
#12 x 2"	12N200TPPZ	12N200TPCZ	12N200TFPZ	12N200THWSZ
#12 x 2-1/2"	12N250TPPZ	12N250TPCZ	12N250TFPZ	12N250THWSZ
#12 x 3"	12N300TPPZ	12N300TPCZ	12N300TFPZ	12N300THWSZ
#12 x 3-1/2"			12N350TFPZ	
#12 x 4"			12N400TFPZ	
#14 x 1/2"	14N50TPPZ	14N50TPCZ	14N50TFPZ	14N50THWSZ
#14 x 5/8"	14N62TPPZ	14N62TPCZ	14N62TFPZ	14N62THWSZ
#14 x 3/4"	14N75TPPZ	14N75TPCZ	14N75TFPZ	14N75THWSZ
#14 x 1"	14N100TPPZ	14N100TPCZ	14N100TFPZ	14N100THWSZ
#14 x 1-1/4"	14N125TPPZ	14N125TPCZ	14N125TFPZ	14N125THWSZ
#14 x 1-1/2"	14N150TPPZ	14N150TPCZ	14N150TFPZ	14N150THWSZ
#14 x 1-3/4"	14N175TPPZ	14N175TPCZ	14N175TFPZ	14N175THWSZ
#14 x 2"	14N200TPPZ	14N200TPCZ	14N200TFPZ	14N200THWSZ
#14 x 2-1/2"	14N250TPPZ	14N250TPCZ	14N250TFPZ	14N250THWSZ
#14 x 3"	14N300TPPZ	14N300TPCZ	14N300TFPZ	14N300THWSZ
#14 x 3-1/2"	14N350TPPZ		14N350TFPZ	
#14 x 4"			14N400TFPZ	
#14 x 5"			14N500TFPZ	
#14 x 6"			14N600TFPZ	

• *Note: All sheet metal screws are packaged 100/bx*

Suggested Hole Sizes for Type AB Sheet Metal Screws

NOMINAL SCREW SIZE	HOLE DIAMETER MAX.	HOLE DIAMETER MEAN	HOLE DIAMETER MIN.	DRILL SIZE
#4-24	.103	.096	.089	3/32
#5-20	.114	.107	.100	1/8
#6-20	.124	.116	.108	9/64
#8-18	.148	.138	.128	9/64
#10-16	.170	.159	.148	5/32
#12-14	.194	.182	.169	3/16
#14-14	.226	.211	.196	7/32

FASTENERS

Contractor:	Total Electrical Construction Co., Inc.
Date:	06/19/09
Project:	WO#12 – South Wing Emergency Stair Repair
Contract:	BT-200.200
Item:	Stud Bolt Anchors
Spec Section:	16190 – Supporting Devices
Page:	16190-6
Paragraph:	2.04
Drawing:	-
Submittal: 16190-06	**Rev:** 0
Approver:	Michael Lipari

THE PORT AUTHORITY OF NY & NJ
( ) APPROVED
( ) APPROVED AS CORRECTED
(X) NOT APPROVED
APPROVAL IS ONLY FOR CONFORMANCE WITH THE DESIGN CONCEPT OF THE PROJECT AND COMPLIANCE WITH THE INFORMATION GIVEN IN THE CONTRACT DOCUMENTS. CONTRACTOR IS RESPONSIBLE FOR CONFIRMING AND CORRELATING ALL DIMENSIONS AT THE JOB SITE, FOR OPERATIONS THAT PERTAIN TO THE FABRICATION PROCESS OR TO THE TECHNIQUES OF CONSTRUCTION AND FOR COORDINATION OF THE WORK OF ALL TRADES.
The Port Authority of NY & NJ
Engineering Department
Date: 8-7-09 By: _____
Senior Engineer/Architect

16190-006
200.200 W.O. 12

A. G. CONSULTING ENGINEERING
FILE NO. _____
— CONFORMS
— CONFORMS AS NOTED
— REVISE AS NOTED & RESUBMIT
— REJECTED, RESUBMIT
— REVIEW NOT REQUIRED
BY _____
DATE _____
REVIEWED FOR GENERAL CONFORMANCE
E DESIGN CONCEPT ONLY.
TOR IS RESPONSIBLE FOR
QUANTITIES AND
N WITH OTHER TRADES.
NOTATIONS ON THE
T TO BE CONSTRUED AS
ION FOR ADDITIONAL

Structural Comments

3. Refer to Structural Notes 5, 6, 7, 8, 10 on drawing G003 and provide shop drawings including details and layout for support types and calculations as indicated.
4. Resubmit components vendor catalog cuts (along with shop drawings and calculations) marked-up to indicate specific model, type, diameter, finish, etc. and referencing the specific shop drawings and support assembly detail/section.

Size as Needed

ANCHORS

THE Product Line

Power-Stud™ *Wedge Expansion Anchor*

Product Description

The Power-Stud™ anchor is a fully threaded, torque controlled wedge expansion anchor which is designed for consistent performance. It is suitable for applications in solid concrete and grout-filled concrete masonry. The Power-Stud™ is produced in carbon steel as well as 304 and 316 stainless steel to offer various levels of corrosion resistance depending on application. The drill bit diameter necessary for proper installation is the same as the anchor diameter.

Advantages

- Length identification stamped on each threaded anchor
- Anchor can be installed through the fixture, no need for hole spotting
- Chamfered impact section prevents damage to threads
- Length of holes can be over-drilled or bottomless
- Convenient, fully threaded body - no shims required
- Clip design prevents spinning during installation
- All major approvals and listings available upon request

Installation

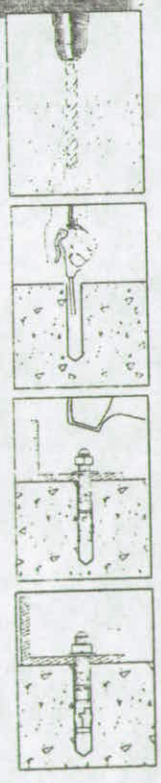

Using the proper diameter bit, drill a hole into the base material to a depth of at least 1/2" or one anchor diameter deeper than the embedment required.

Blow the hole clean of dust and other material. Do not expand the anchor prior to installation.

Position the washer on the anchor and thread on the nut. Drive the anchor through the fixture into the anchor hole until the nut and washer are firmly seated against the fixture. Be sure the anchor is driven to the required embedment depth.

Tighten the anchor by turning the nut 3 to 5 turns past finger tight or by applying the guide installation torque from the finger tight position.

Material specifications, design criteria, and performance data is available upon request.

Power-Stud™ Maximum Tightening Torque

ANCHOR DIAM.	1/4"	3/8"	1/2"	5/8"	3/4"	7/8"	1"	1-1/4"
TORQUE FT-LBS	8	28	60	90	175	250	300	450

• Maximum tightening torque is listed for anchors installed in normal weight concrete

Power-Stud™ *Carbon Steel, Zinc Plated*

Carbon Steel Power-Stud™ anchors are manufactured from carbon steel which is plated with commercial bright zinc and a supplementary chromate treatment in accordance with ASTM Specification B 633, SC1, Type III.

ITEM CODE	SIZE	MIN. EMBED.	THREAD LENGTH	BOX QTY.	CARTON QTY.
POW 07400	1/4" x 1-3/4"	1-1/8"	3/4"	100	500
POW 07402	1/4" x 2-1/4"	1-1/8"	1-1/4"	100	500
POW 07404	1/4" x 3-1/4"	1-1/8"	2-1/4"	100	500
POW 07410	3/8" x 2-1/4"	1-5/8"	1-1/4"	50	250
POW 07412	3/8" x 2-3/4"	1-5/8"	1-5/8"	50	250
POW 07413	3/8" x 3"	1-5/8"	1-7/8"	50	250
POW 07414	3/8" x 3-1/2"	1-5/8"	2-3/8"	50	250
POW 07415	3/8" x 3-3/4"	1-5/8"	2-5/8"	50	250
POW 07416	3/8" x 5"	1-5/8"	3-7/8"	50	250
POW 07417	3/8" x 7"	1-5/8"	5-7/8"	50	200
POW 07420	1/2" x 2-3/4"	2-1/4"	1-3/8"	50	200
POW 07422	1/2" x 3-3/4"	2-1/4"	2-3/8"	50	200
POW 07423	1/2" x 4-1/2"	2-1/4"	3-1/8"	50	200
POW 07424	1/2" x 5-1/2"	2-1/4"	4-1/8"	50	150
POW 07426	1/2" x 7"	2-1/4"	5-5/8"	25	100
POW 07427	1/2" x 8-1/2"	2-1/4"	7-1/8"	25	100
POW 07430	5/8" x 3-1/2"	2-3/4"	2"	25	100
POW 07432	5/8" x 4-1/2"	2-3/4"	3"	25	100
POW 07433	5/8" x 5"	2-3/4"	3-1/2"	25	100
POW 07434	5/8" x 6"	2-3/4"	4-1/2"	25	75
POW 07436	5/8" x 7"	2-3/4"	5-1/2"	25	75
POW 07438	5/8" x 8-1/2"	2-3/4"	7"	25	75
POW 07439	5/8" x 10"	2-3/4"	8-1/2"	25	75
POW 07440	3/4" x 4-1/4"	3-3/8"	2-3/8"	20	60
POW 07441	3/4" x 4-3/4"	3-3/8"	2-7/8"	20	60
POW 07442	3/4" x 5-1/2"	3-3/8"	3-5/8"	20	60
POW 07444	3/4" x 6-1/4"	3-3/8"	4-3/8"	20	60
POW 07446	3/4" x 7"	3-3/8"	5-1/8"	20	60
POW 07448	3/4" x 8-1/2"	3-3/8"	6-5/8"	10	40
POW 07449	3/4" x 10"	3-3/8"	8-1/8"	10	30
POW 07451	3/4" x 12"	3-3/8"	10-1/8"	10	30
POW 07450	7/8" x 6"	3-7/8"	2-3/4"	10	40
POW 07452	7/8" x 8"	3-7/8"	4-3/4"	10	40
POW 07454	7/8" x 10"	3-7/8"	6-3/4"	10	30
POW 07461	1" x 6"	4-1/2"	2-3/8"	10	30
POW 07463	1" x 9"	4-1/2"	5-3/8"	10	30
POW 07465	1" x 12"	4-1/2"	8-3/8"	5	15
POW 07473	1-1/4" x 9"	5-5/8"	4-3/4"	5	15
POW 07475	1-1/4" x 12"	5-5/8"	7-3/4"	5	15

• The published length is the overall length of the anchor. Allow for fixture thickness plus one anchor diameter for the nut and washer thickness when selecting a length.

Contractor:	Total Electrical Construction Co., Inc.			
Date:	06/19/09			
Project:	WO#12 – South Wing Emergency Stair Repair			
Contract:	BT-200.200			
Item:	Toggle Bolts			
Spec Section:	16190 – Supporting Devices			
Page:	16190-6			
Paragraph:				
Detail:				
Submittal No.:	16190-07	**Rev:**	0	
Attention:	Michael Lipari			

THE PORT AUTHORITY OF NY & NJ

( ) APPROVED
( ) APPROVED AS CORRECTED
(X) NOT APPROVED

APPROVAL IS ONLY FOR CONFORMANCE WITH THE DESIGN CONCEPT OF THE PROJECT AND COMPLIANCE WITH THE INFORMATION GIVEN IN THE CONTRACT DOCUMENTS. CONTRACTOR IS RESPONSIBLE FOR CONFIRMING AND CORRELATING ALL DIMENSIONS AT THE JOB SITE FOR OPERATIONS THAT PERTAIN TO THE FABRICATION PROCESS OR TO THE TECHNIQUES OF CONSTRUCTION AND FOR COORDINATION OF THE WORK OF ALL TRADES.

The Port Authority of NY & NJ
Engineering Department

Date: 8-18-09 By: _____ Senior Engineer/Architect

16190-007
200.200 W.O. #12

A. G. CONSULTING ENGINEERING

FILE NO. J-210

__ CONFORMS
__ CONFORMS AS NOTED
__ REVISE AS NOTED & RESUBMIT
__ REJECTED, RESUBMIT
__ REVIEW NOT REQUIRED

BY _____

DATE _____

REVIEWED FOR GENERAL CONFORMANCE WITH THE DESIGN CONCEPT ONLY. CONTRACTOR IS RESPONSIBLE FOR DIMENSIONS, QUANTITIES AND COORDINATION WITH OTHER TRADES. NTS NOTATIONS ON THE S NOT TO BE CONSTRUED AS ZATION FOR ADDITIONAL

Structural Comments

9. Refer to Structural Notes 5, 6, 7, 8, 10 on drawing G003 and provide shop drawings including details and layout for support types and calculations as indicated.
10. Resubmit components vendor catalog cuts (along with shop drawings and calculations) marked-up to indicate specific model, type, diameter, finish, etc. and referencing the specific shop drawings and support assembly detail/section.

Concrete & Masonry Anchors

Tanner BOLT NUT CORP.

Double Expansion Shields

Double expansion shields are anchors designed to be used in concrete, brick or block. Used with a machine thread screw or bolt, the anchor expands against the concrete at two points. The expansion action at both ends of the shield distributes the anchored load throughout the length of the shield. This expansion anchor is recommended for shear loads or where the bolt is subjected to side pressure or vibration. Once fastened, the object may be unbolted, removed, and/or re - fastened. The anchors are made from a die-cast zinc alloy.

Double Expansion Shields

ITEM CODE	SIZE	DRILL DIA.	BOX QTY.	ITEM CODE	BULK QTY.
DE14	1/4"-20	1/2"	100	TB-160	1000
DE56	5/16"-18	3/4"	50		
DE38	3/8"-16	3/4"	50	TB-162	500
DE12	1/2"-13	7/8"	25	TB-163	250
DE58	5/8"-11	1"	25		
DE34	3/4"-10	1-1/4"	10		

Lag Shields

Lag shield anchors are designed for anchoring into concrete, brick and block. The anchor is available in two lengths, short or long. The short shield is used for anchoring in high grade concrete or where the thickness of the base material prohibits the use of a longer length shield. The long shield is used in lower grade base material or where extra anchoring strength is needed. The shield is manufactured of zinc alloy, a rust-proof material.

Lag Shields *Short & Long*

ITEM CODE	SIZE	HOLE SIZE	ANCHOR LENGTH	BOX QTY.	ITEM CODE	BULK QTY.
L14S	1/4" Short	1/2"	1"	50	TB-480	2000
L56S	5/16" Short	1/2"	1-1/4"	50	TB-482	1200
L38S	3/8" Short	5/8"	1-3/4"	50	TB-484	1800
L12S	1/2" Short	3/4"	2"	50	TB-486	1000
L14L	1/4" Long	1/2"	1-1/2"	50	TB-481	800
L56L	5/16" Long	1/2"	1-3/4"	50	TB-483	500
L38L	3/8" Long	5/8"	2-7/16"	50	TB-485	500
L12L	1/2" Long	3/4"	3-1/2"	25	TB-487	300
L58L	5/8" Long	7/8"	3-1/2"	25		
L34L	3/4" Long	1"	3-1/2"	25		

Toggle Bolts

The toggle bolt is a spring wing type hollow wall anchor designed for use in block, wallboard and other hollow based materials. The toggle bolt is a two-part assembly consisting of a machine screw and a spring wing toggle. Machine screws are round head combination drive and are also available in other head styles.

Size as Needed

Toggle Bolts *Round Head*

ITEM CODE	SIZE	BOX QTY.	ITEM CODE	BULK QTY.
TR31-300	3/16" x 3"	50	TB-100	1000
TR31-400	3/16" x 4"	50	TB-101	1000
TR14-300	1/4" x 3"	50	TB-105	500
TR14-400	1/4" x 4"	50	TB-106	500
TR38-300	3/8" x 3"	25		
TR38-400	3/8" x 4"	25		

Plastic Anchors

The plastic anchor is designed for use with light-weight fixtures with a sheet metal or wood screw. The anchor is recommended for light duty static applications where holding power is not a critical factor. It should not be used overhead.

Plastic Anchors

PA *w/Sheet Metal Screw Comb.*

ITEM CODE	SIZE	DRILL DIAMETER	BOX QTY.	ITEM CODE	SIZE	BULK QTY.
POW 07559	#6-#8 x 3/4"	3/16"	100	TB-110	#10x1 SMS & Anchors	4000
POW 07569	#8-#10 x 7/8"	3/16"	100	TB-111	#10x1-1/4 SMS & Anchors	3500
POW 07579	#10-#12 x 1"	1/4"	100			
POW 07589	#14-#16 x 1-1/2"	5/16"	100	TB-115	#10 -12x1 PA only	5000

ANCHORS

Tanner BOLT NUT CORP.

Contractor:	Total Electrical Construction Co., Inc.		
Date:	06/19/09		
Project:	WO#12 – South Wing Emergency Stair Repair		
Contract:	BT-200.200		
Item:	Double Expansion Anchors		
Spec Section:	16190 – Supporting Devices		
Page:	16190-6		
Para:	2.04		
Drawing:	-		
Submittal:	16190-08	**Rev:**	0
Approved By:	Michael Lipari		

THE PORT AUTHORITY OF NY & NJ
( ) APPROVED
( ) APPROVED AS CORRECTED
(X) NOT APPROVED
APPROVAL IS ONLY FOR CONFORMANCE WITH THE DESIGN CONCEPT OF THE PROJECT AND COMPLIANCE WITH THE INFORMATION GIVEN IN THE CONTRACT DOCUMENTS. CONTRACTOR IS RESPONSIBLE FOR CONFIRMING AND CORRELATING ALL DIMENSIONS AT THE JOB SITE FOR OPERATIONS THAT PERTAIN TO THE FABRICATION PROCESS OR TO THE TECHNIQUES OF CONSTRUCTION AND FOR COORDINATION OF THE WORK OF ALL TRADES.
The Port Authority of NY & NJ
Engineering Department
Date: 6-16-09 By: Senior Engineer/Architect

16190-008
200.200 W.O.12

A. G. CONSULTING ENGINEERING
FILE NO. D-12
__ CONFORMS
__ CONFORMS AS NOTED
__ REVISE AS NOTED & RESUBMIT
__ REJECTED, RESUBMIT
__ REVIEW NOT REQUIRED
BY
DATE
REVIEWED FOR GENERAL CONFORMANCE WITH THE DESIGN CONCEPT ONLY. CONTRACTOR IS RESPONSIBLE FOR DIMENSIONS, QUANTITIES AND COORDINATION WITH OTHER TRADES. CONSULTANTS NOTATIONS ON THE DRAWING IS NOT TO BE CONSTRUED AS AUTHORIZATION FOR ADDITIONAL

Structural Comments

3. Refer to Structural Notes 5, 6, 7, 8, 10 on drawing G003 and provide shop drawings including details and layout for support types and calculations as indicated.
4. Resubmit components vendor catalog cuts (along with shop drawings and calculations) marked-up to indicate specific model, type, diameter, finish, etc. and referencing the specific shop drawings and support assembly detail/section.

Concrete & Masonry Anchors

Tanner BOLT NUT CORP.

Double Expansion Shields

Double expansion shields are anchors designed to be used in concrete, brick or block. Used with a machine thread screw or bolt, the anchor expands against the concrete at two points. The expansion action at both ends of the shield distributes the anchored load throughout the length of the shield. This expansion anchor is recommended for shear loads or where the bolt is subjected to side pressure or vibration. Once fastened, the object may be unbolted, removed, and/or re - fastened. The anchors are made from a die-cast zinc alloy.

size as needed

Double Expansion Shields

ITEM CODE	SIZE	DRILL DIA.	BOX QTY.	ITEM CODE	BUCKET QTY.
DE14	1/4"-20	1/2"	100	TB-160	1000
DE56	5/16"-18	3/4"	50		
DE38	3/8"-16	3/4"	50	TB-162	500
DE12	1/2"-13	7/8"	25	TB-163	250
DE58	5/8"-11	1"	25		
DE34	3/4"-10	1-1/4"	10		

Lag Shields

Lag shield anchors are designed for anchoring into concrete, brick and block. The anchor is available in two lengths, short or long. The short shield is used for anchoring in high grade concrete or where the thickness of the base material prohibits the use of a longer length shield. The long shield is used in lower grade base material or where extra anchoring strength is needed. The shield is manufactured of zinc alloy, a rust-proof material.

Lag Shields *Short & Long*

ITEM CODE	SIZE	BOLT SIZE	ANCHOR LENGTH	BOX QTY.	ITEM CODE	BUCKET QTY.
L14S	1/4" Short	1/2"	1"	50	TB-480	2000
L56S	5/16" Short	1/2"	1-1/4"	50	TB-482	1200
L38S	3/8" Short	5/8"	1-3/4"	50	TB-484	1800
L12S	1/2" Short	3/4"	2"	50	TB-486	1000
L14L	1/4" Long	1/2"	1-1/2"	50	TB-481	800
L56L	5/16" Long	1/2"	1-3/4"	50	TB-483	500
L38L	3/8" Long	5/8"	2-7/16"	50	TB-485	500
L12L	1/2" Long	3/4"	3-1/2"	25	TB-487	300
L58L	5/8" Long	7/8"	3-1/2"	25		
L34L	3/4" Long	1"	3-1/2"	25		

Toggle Bolts

The toggle bolt is a spring wing type hollow wall anchor designed for use in block, wallboard and other hollow based materials. The toggle bolt is a two-part assembly consisting of a machine screw and a spring wing toggle. Machine screws are round head combination drive and are also available in other head styles.

Toggle Bolts *Round Head*

ITEM CODE	SIZE	BOX QTY.	ITEM CODE	BUCKET QTY.
TR31-300	3/16" x 3"	50	TB-100	1000
TR31-400	3/16" x 4"	50	TB-101	1000
TR14-300	1/4" x 3"	50	TB-105	500
TR14-400	1/4" x 4"	50	TB-106	500
TR38-300	3/8" x 3"	25		
TR38-400	3/8" x 4"	25		

Plastic Anchors

The plastic anchor is designed for use with light-weight fixtures with a sheet metal or wood screw. The anchor is recommended for light duty static applications where holding power is not a critical factor. It should not be used overhead.

Plastic Anchors

ITEM CODE	SIZE	DRILL DIAMETER	BOX QTY.
POW 07559	#6-#8 x 3/4"	3/16"	100
POW 07569	#8-#10 x 7/8"	3/16"	100
POW 07579	#10-#12 x 1"	1/4"	100
POW 07589	#14-#16 x 1-1/2"	5/16"	100

PA *w/Sheet Metal Screw Comb.*

ITEM CODE	SIZE	BUCKET QTY.
TB-110	#10x1 SMS & Anchors	4000
TB-111	#10x1-1/4 SMS & Anchors	3500
TB-115	#10 -12x1 PA only	5000

Tanner BOLT NUT CORP.

Contractor:	Total Electrical Construction Co., Inc.
Date:	06/19/09
Project:	WO#12 – South Wing Emergency Stair Repair
Contract:	BT-200.200
Item:	Drop-In Anchors
Spec Section:	16190 – Supporting Devices
Page:	16190-6
Paragraph:	2.04
Drawing No.:	-
Submittal No.:	16190-09
Approved By:	Michael Lipari

THE PORT AUTHORITY OF NY & NJ

( ) APPROVED

( ) APPROVED AS CORRECTED

(X) NOT APPROVED

APPROVAL IS ONLY FOR CONFORMANCE WITH THE DESIGN CONCEPT OF THE PROJECT AND COMPLIANCE WITH THE INFORMATION GIVEN IN THE CONTRACT DOCUMENTS. CONTRACTOR IS RESPONSIBLE FOR CONFIRMING AND CORRELATING ALL DIMENSIONS AT THE JOB SITE FOR OPERATIONS THAT PERTAIN TO THE FABRICATION PROCESS OR TO THE TECHNIQUES OF CONSTRUCTION AND FOR COORDINATION OF THE WORK OF ALL TRADES.

Rev. 6

The Port Authority of NY & NJ
Engineering Department

Date: 8-12-09 By: _____
Senior Engineer/Architect

A. G. CONSULTING ENGINEERING

FILE NO. 12-12

__ CONFORMS

__ CONFORMS AS NOTED

__ REVISE AS NOTED & RESUBMIT

__ REJECTED, RESUBMIT

__ REVIEW NOT REQUIRED

BY _____

DATE _____

REVIEWED FOR GENERAL CONFORMANCE WITH THE DESIGN CONCEPT ONLY. CONTRACTOR IS RESPONSIBLE FOR DIMENSIONS, QUANTITIES AND COORDINATION WITH OTHER TRADES. CONSULTANTS NOTATIONS ON THIS SUBMITTAL IS NOT TO BE CONSTRUED AS AN AUTHORIZATION FOR ANY EXTRA WORK OR COST.

16190-009
200.200 W.O. 12

Structural Comments

3. Refer to Structural Notes 5, 6, 7, 8, 10 on drawing G003 and provide shop drawings including details and layout for support types and calculations as indicated.
4. Resubmit components vendor catalog cuts (along with shop drawings and calculations) marked-up to indicate specific model, type, diameter, finish, etc. and referencing the specific shop drawings and support assembly detail/section.

THE Tanner Product Line

PRODUCT CATALOG

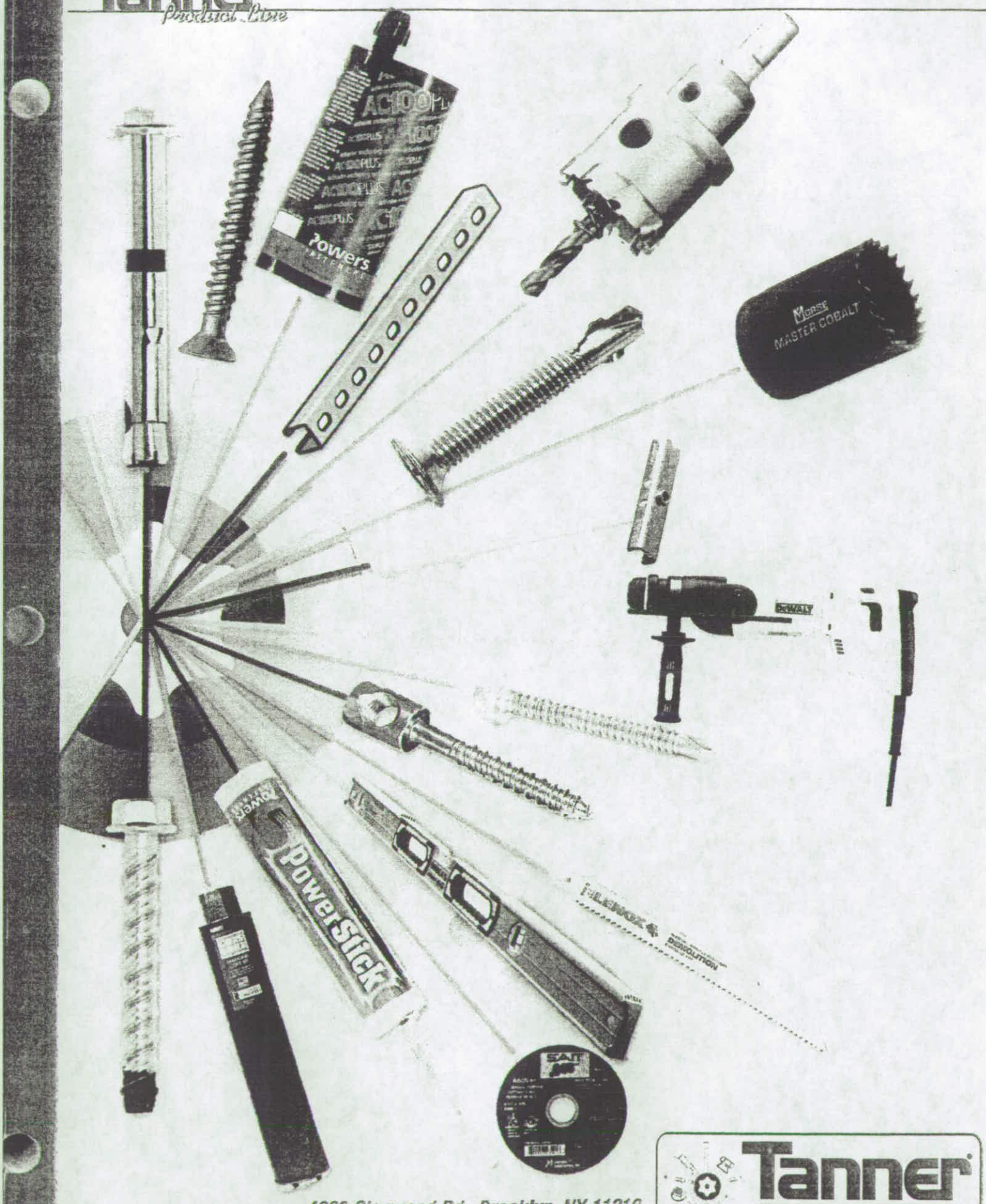

4302 Glenwood Rd., Brooklyn, NY 11210
800 456-2658 Fax: 888 434-3215 www.tannerbolt.com

Tanner BOLT&NUT CORP.

THE

Product Line

Dropin™ Expansion Anchors

Size as Needed

Product Description

The Dropin™ is an all steel, machine bolt anchor available in carbon steel and two types of stainless. It can be used in solid concrete, hard stone, and solid block base materials. FM and UL listings make this anchor appropriate for overhead applications.

Applications

- Easy removability
- Flange (lipped) version installs flush for easy inspection and standardizes rod heights.
- Smooth wall dropin can be installed flush mounted or below the base material surface.
- Qualified in seismic and wind loads.

Installation Procedures

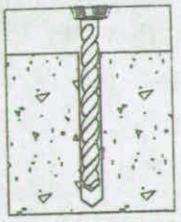

Drill a hole into the base material to the depth of embedment required. The tolerances of the drill bit used should meet the requirements of ANSI Standard B212.15. Do not over drill the hole unless the application calls for a subset anchor.

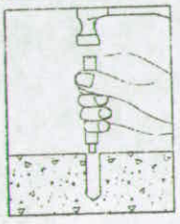

Blow the hole clean of dust and other materials. Insert the anchor into the hole and tap flush with surface. Using a Powers setting tool specifically, set the anchor by driving the tool with a sufficient number of hammer blows until the shoulder of the tool is seated against the anchor. Anchor will not hold allowable loads required if shoulder of Powers setting tool does not seat against anchor.

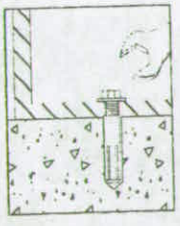

If using a fixture, position it, insert bolt and tighten. Most overhead applications utilize threaded rod. Minimum thread engagement should be at least one anchor diameter.

Carbon Steel Dropin™, *Zinc Plated*

ITEM CODE	BODY/ANCHOR	OVERALL LENGTH	THREAD	BOX QTY.	ITEM CODE	CARTON QTY.
POW 06304	1/4"	1"	7/16"	100	TB-500	1000
POW 06306	3/8"	1-9/16"	5/8"	50	TB-502	500
POW 06308	1/2"	2"	13/16"	50	TB-504	250
POW 06320	5/8"	2-1/2"	1-3/16"	25		
POW 06312	3/4"	3-3/16"	1-3/8"	10		

Stainless Steel Dropin™ *Type 303*

ITEM CODE	BODY/ANCHOR	OVERALL LENGTH	THREAD	BOX QTY.	CARTON QTY.
POW 06204	1/4"	1"	7/16"	100	1000
POW 06206	3/8"	1-9/16"	5/8"	50	500
POW 06208	1/2"	2"	13/16"	50	250
POW 06210	5/8"	2-1/2"	1-3/16"	25	125
POW 06212	3/4"	3-3/16"	1-3/8"	10	50

Stainless Steel Dropin™ *Type 316*

POW 06224	1/4"	1"	7/16"	100	1000
POW 06226	3/8"	1-9/16"	5/8"	50	500
POW 06228	1/2"	2"	13/16"	50	250
POW 06230	5/8"	2-1/2"	1-3/16"	25	125
POW 06232	3/4"	3-3/16"	1-3/8"	10	50

Dropin™ *Carbon Steel Flanged (Lipped), Zinc Plated*

ITEM CODE	BODY/ANCHOR	OVERALL LENGTH	THREAD	BOX QTY.	CARTON QTY.
POW 06324	1/4"	1"	7/16"	100	1000
POW 06326	3/8"	1-9/16"	5/8"	50	500
POW 06328	1/2"	2"	13/16"	50	250

Setting Tools for Steel Dropin™

ITEM CODE	BODY/ANCHOR	BOX QTY.	CARTON QTY.
POW 06305	1/4"	1	250
POW 06307	3/8"	1	100
POW 06309	1/2"	1	100
POW 06311	5/8"	1	50
POW 06313	3/4"	1	25

ANCHORS

Tanner BOLT NUT CORP.

Contractor:	Total Electrical Construction Co., Inc.		
Date:	06/19/09		
Project:	WO#12 – South Wing Emergency Stair Repair		
Contract:	BT-200.200		
Item:	Threaded Rod		
Spec Section:	16190 – Supporting Devices		
Page:	16190-6		
Paragraph:	2.04		
Drawing:			
Submittal:	16190-10	**Rev:**	0
Approved by:	Michael Lipari		

THE PORT AUTHORITY OF NY & NJ
( ) APPROVED
( ) APPROVED AS CORRECTED
(X) NOT APPROVED
APPROVAL IS ONLY FOR CONFORMANCE WITH THE DESIGN CONCEPT OF THE PROJECT AND COMPLIANCE WITH THE INFORMATION GIVEN IN THE CONTRACT DOCUMENTS. CONTRACTOR IS RESPONSIBLE FOR CONFIRMING AND CORRELATING ALL DIMENSIONS AT THE JOB SITE FOR OPERATIONS THAT PERTAIN TO THE FABRICATION PROCESS OR TO THE TECHNIQUES OF CONSTRUCTION AND FOR COORDINATION OF THE WORK OF ALL TRADES.
The Port Authority of NY & NJ
Engineering Department
Date: 6-18-09 By: _____
Senior Engineer/Architect

16190-010
200.200 W.O. #12

A. G. CONSULTING ENGINEERING
FILE NO. _____
— CONFORMS
— CONFORMS AS NOTED
— REVISE ANNOTED & RESUBMIT
— REJECTED RESUBMIT
— REVIEW NOT REQUIRED
BY: _____
DATE: _____
REVIEWED FOR GENERAL CONFORMANCE WITH THE DESIGN CONCEPT ONLY. CONTRACTOR IS RESPONSIBLE FOR DIMENSIONS, QUANTITIES AND COORDINATION WITH OTHER TRADES. CONSULTANTS NOTATIONS ON THE NOT TO BE CONSTRUED AS ATION FOR ADDITIONAL

Structural Comments

1. Refer to Structural Notes 5, 6, 7, 8, 10 on drawing G003 and provide shop drawings including details and layout for support types and calculations as indicated.
2. Resubmit components vendor catalog cuts (along with shop drawings and calculations) marked-up to indicate specific model, type, diameter, finish, etc. and referencing the specific shop drawings and support assembly detail/section.

Threaded Rod Steel

Tanner BOLT NUT CORP.

size as needed

Threaded Rod Steel

Threaded rod is produced from cold-rolled steel. Rolled threads offer increased strength, uniform accuracy and a higher degree of surface finish than machine-cut threads, in addition to being lower cost.
Threaded rod can be used with standard nuts and washers (sold separately), and may be used in standard stock lengths or cut by customer to the length required.

Special order lengths are available, contact your Tanner sales representative

Threaded Rod Steel *6' Lengths*

DIAMETER	ITEM CODE ZINC PLATED	ITEM CODE HOT DIP GALVANIZED
1/4"-20	25C7200RATZ	25C7200RATH
5/16"-18	31C7200RATZ	31C7200RATH
3/8"-16	37C7200RATZ	37C7200RATH
1/2"-13	50C7200RATZ	50C7200RATH
5/8"-11	62C7200RATZ	62C7200RATH
3/4"-10	75C7200RATZ	75C7200RATH
7/8"-9	87C7200RATZ	87C7200RATH
1"-8	100C7200RATZ	100C7200RATH
1-1/4"-7	125C7200RATZ	125C7200RATH
1-1/2"-6	150C7200RATZ	150C7200RATH

Bundle Quantities & Weights - 6' Lengths

DIAMETER	PIECES	PCS.	LBS.	WT.
1/4"-20	12	50	300	36
5/16"-18	20	35	210	42
3/8"-16	29	25	150	43.5
1/2"-13	54	12	72	39
5/8"-11	83	8	48	40
3/4"-10	125	5	30	37.5
7/8"-9	170	4	24	41
1"-8	223	2	12	27
1-1/4"-7	354	2	12	42
1-1/2"-6	512	1	6	30

Rod Coupling Nuts

Rod Coupling Nuts

Rod Coupling Nuts have extended length for joining two pieces of rod firmly together. Reducing Coupling Nuts are used to connect two threaded with different thread sizes. Each size is threaded approximately halfway through.

Rod Coupling Nuts *Steel Zinc Plated*

ITEM CODE	THREAD SIZE	OVERALL LENGTH	HEX SIZE	BOX QTY.
25CNCOZ	1/4-20"	7/8"	3/8"	100
31CNCOZ	5/16"-18	1-1/8"	1/2"	100
37CNCOZ/SH	3/8"-16	1-1/8"	5/8"	50
37CNCOZ	3/8"-16	1-3/4"	5/8"	50
50CNCOZ	1/2"-13	1-3/4"	5/8'	50
62CNCOZ	5/8"-11	2-1/8"	13/16"	25
75CNCOZ	3/4"-10	2-1/4"	1"	25
87CNCOZ	7/8"-9	2-1/2"	1-1/4"	15
100CNCOZ	1"-8	2-3/4"	1-1/4"	10

• Hot Dip Galvanized parts available upon request.

Reducing Rod Coupling Nuts *Steel Zinc Plated*

MI R36	1/4"-20 to 3/8"-16	1"	1/2"	100
MI R37	1/4"-20 to 1/2"-13	1-1/4"	1/2"	50
MI R38	5/16"-18 to 3/8"-16	1"	1/2"	100
MI R39	5/16"-18 to 1/2"-13	1-1/4"	5/8"	50
MI R40	3/8"-16 to 1/2"-13	1-1/4"	5/8"	50
MI R41	3/8"-16 to 5/8"-11	1-1/2"	3/4"	50
MI R43	1/2"-13 to 5/8"-11	1-1/2"	3/4"	50
MI R44	3/8"-16 to 3/4"-10	2"	7/8"	25
MI R45	1/2"-13 to 3/4"-10	2"	7/8"	25
MI R46	5/8"-11 to 3/4"-10	2"	7/8"	25
MI R47	3/4"-10 to 7/8"-9	1-3/4"	1-1/4"	25

Please see Page 43 for Tanner's Bucket of Bolts!

(c) O#12

PA 2327/10-03

THE PORT AUTHORITY OF NEW YORK & NEW JERSEY

SUBCONTRACTOR APPROVAL REQUEST

CONTRACT No. BT200.200 (c) O#12

1 ☐ NO PERFORMANCE AND PAYMENT BOND IS REQUIRED TO BE PROVIDED BY THE GENERAL CONTRACTOR

2 ☑ A PERFORMANCE AND PAYMENT BOND IS REQUIRED TO BE PROVIDED BY THE GENERAL CONTRACTOR

3 ☐ PARTICIPATION IN NEW YORK STATE APPRENTICESHIP PROGRAM IS REQUIRED for Subcontracts over $1 million

Part One: (To be completed by General Contractor)

Prime Contractor's Name: VRH CONSTRUCTION CORP. Telephone No. (2 0 1) 871-4422

Address: 320 GRAND AVENUE, ENGLEWOOD, NJ 07631

Facility: PORT AUTHORITY BUS TERMINAL

Contract Title PORT AUTHORITY BUS TERMINAL CONSTRUCTION PROGRAM

Request Approval of:

Subcontractor's Name: Fine Painting & Decorating Co Inc.

Address: 1160 Route 22 West, Mountainside, NJ

Telephone No. (908) 301-1040

Type of Work: Painting

Amount of Sub-Contract

Materials $ 64,000

Labor $ 308,000

Total $ 372,000

Has the Subcontractor done work under Port Authority contract? ☒ Yes ☐ No

Est. Start Date | Actual Start Date

Part Two (To Be Completed by General Contractor)

Subcontractor References:

PA Contract Nos. or Three References (including Name and Telephone Numbers of Owner Rep. Contract Numbers and Estimate of Work Performed).

The Port Authority of NY & NJ
Value: $31,000
G.C. Holt Construction
Contact: Al Prescot
Phone: 212-391-0528
Contract No: HT 224-105

The Port Authority of NY & NJ
Value: $44,000
G.C. VRH Construction
Contact: Art Knowlton
Phone: 201-871-6727
Contact No: BT 254-084

The Port Authority NY & NJ
Value: $150,000
G.C. Fitzpatrick & Associates, Inc
Contact: Bob McGee
Phone: 732-542-8772
Contract No: EWR-154.270

Signature of Prime Contractor's Officer — Title — 4/26/09 Date

Part Three (To Be Completed by Subcontractor)

Notification To Contractor:

The Subcontractor should note that it has no recourse against the Port Authority for payments due from the General Contractor under under the subcontract.

If box 1 is checked the Subcontractor should also note that the General Contractor has NOT been required to furnish a Performance Bond in connection with the contract.

If box 2 is checked the Subcontractor should also note that the General contractor has been required to furnish a Performance Bond in connection with the contract. A copy of such Bond is on file in the Office of the Secretary of the Port Authority.

Subcontractor Certification:

By executing this form you certify that you have not been indicted or convicted in any jurisdiction or suspended, debarred or otherwise disqualified from entering into contracts with any governmental agency or had a contract terminated by any governmental agency for breach of contract or for any cause related directly or indirectly to an indictment or conviction; and further, that you have not taken any action which would be proscribed by the current Port Authority Code of Ethics or enterd into any arrangement for the payment of a fee of any kind to any person or agency (other than a bona fide established commercial or sellin agency maintained by you for the purpose of securing business) to solicit or secure the Authority's approval of you as a subcontractor. This Certification shall be deemed, if made by a Corporation. To include the officers, directors and shareholders with an equity interest in excess of 10% and to have been authorized by your Board of Directors and if a partnership, to be made by each partner. If you cannot so certify, then you shall submit to the contractor submitting this Request an explanatory statement directed to the Port Authority setting forth in detail why the certification cannot be made. The foregoing certification or signed statement shall be deemed to have been made by you with full knowledge that it would become a part of the records of the Authority and that the Authority will rely on its truth and accuracy in approving you as a subcontractor. Knowingly providing a false certification or statement pursuant hereto may be the basis for prosecution for offering a false instrument for filing (see,e.g., N.Y. Penal Law, Section 175.30 et seq.)

Signature of Subcontractor's Officer — 4/20/09 Date

Title

Part Three A (To Be Completed by Subcontractor only if box 3 is checked for New York State Apprenticeship program *AND* in addition to certification at left)

Subcontractor Certification:

You participate in a State registered apprenticeship program unless you are certified by the Port Authority as a Minority Business Enterprise, Women-Owned Business Enterprise, Small Business Enterprise firm that is located in New York and New Jersey and whose average gross income for the past three years did not exceed $5 million annually) or Disadvantaged Business Enterprise and the value of the subcontract is less than $1 million. Participation in such an apprenticeship program shall mean that you either (i) are signatory to a collective bargaining agreement with a labor organization which sponsors an apprenticeship program registered in New York State or (ii) individually sponsors an apprenticeship program registered in New York State.

If you cannot so certify, then you shall submit to the contractor submitting this Request an explanatory statement directed the Port Authority setting forth in detail why the certification cannot be made. The foregoing certification or signed statement shall be deemed to have been made by you with full knowledge that it would become part of the records of the Authority and that the Authority will rely on its truth and accuracy in approving you as a subcontractor. Knowingly providing a false certification or statement pursuant hereto may be the basis for prosecution for offering a false instrument for filling (see e.g., N.Y. Penal Law, Section 175.30 et seq.)

Signature of Subcontractor's Officer — Date

Title

Part Four: (To be Completed by Port Authority)

☐ Subject to the provisions of subject contract, the subcontractor submitted for approval on this application is hereby disapproved

☒ Subject to the provisions of the subject contract, the subcontractor submitted for approval on this application is hereby approved for performance of work at the site only. Any materials to be furnished by this subcontractor shall be subject to inspection and approval as by the contract.

6/16/09 Date — Signature — Engineer of Construction Title

Part Five: (For Port Authority Use Only)

Subcontractor Certification/Status (check all that applies)

Initial/Date _____

☐ MBE ☐ DBE ☐ LBE ☐ WBE ☐ SBE ☐ NONE

Taxation and inance

Sales Tax Registration
W A Harriman Campus
Albany NY 12227

FINE PAINTING AND DECORATING COMPANY INC.
1160 RT 22 W
MOUNTAINSIDE NJ 07092-2810

New York State Department of Taxation and Finance

Certificate of Authority

Identification number

222363550

(Use this number on all returns and correspondence)

VALIDATED

06/09/2009

Dept of Tax
and Finance

FINE PAINTING AND DECORATING COMPANY INC.
1160 RT 22 W
MOUNTAINSIDE NJ 07092-2810

is authorized to collect sales and use taxes under Articles 28 and 29 of the New York State Tax Law.

Nontransferable

This certificate must be prominently displayed at your place of business.
Fraudulent or other improper use of this certificate will cause it to be revoked.
This certificate may not be photocopied or reproduced.

4020111080098

Photographs - copyright of NYS Empire State Development

DTF-17-A (11/08)

State of New York
Department of State

ss:

I hereby certify, that FINE PAINTING AND DECORATING COMPANY INC. a NEW JERSEY corporation, doing business in the State of New York under the fictitious name of FPD filed an Application for Authority to do business in the State of New York on 04/19/1996. I further certify that so far as shown by the records of this Department, such corporation is still authorized to do business in the State of New York.

The Biennial Statement is past due.

***

Witness my hand and the official seal of the Department of State at the City of Albany, this 20th day of March two thousand and one.

Special Deputy Secretary of State

200103210200 54

FINE

Committed to Quality

1160 Route 22 West
Mountainside, NJ 07092
Tel: (908) 301-1040
Fax: (908) 301-1056
E-mail: fineinfo@aol.com
www.finepainting.com

Form A

ASSIGNMENT BY SUB-CONTRACTOR

The undersigned, hereinafter called Sub-Contractor under Contract No. 200.200 dated between the Port Authority of New York and New Jersey and its subsidiary and affiliated companies, and VRH Construction Corp. (The "Contractor"), in consideration of the agreement of The Port Authority of N.Y. & N.J. to arrange insurance as provided in the Contract for the Contractor, and for each Sub-Contractor, thereunder, and for other good and valuable consideration, hereby assigns to The Port Authority of N.Y. & N.J. all return premiums, premium refunds, dividends and any monies due or to become due to the undersigned in connection with said insurance as procured by The Port Authority of N.Y. & N.J. and referred to in said Contract.

Date: 4/30/2009

(Name of Sub-Contractor):

(Authorized Signature):

(Please Print Name and Title): GREG SINGH, Executive VP
FINE PAINTING & DECORATING CO., INC.

CIP 2000

FORM B

Contractors Insurance Program
CONTRACTORS & SUBCONTRACTORS INFORMATION FORM

The information below will be used a basis for policy preparation.

1. FULL NAME Fine Painting & Decorating Co., Inc.

   ADDRESS 1160 Route 22 West Mountainside, NJ 07080

1A Federal ID # 222363550

1B Unemployment ID# 535306-00-9

1C State Board Number 292896

1D Employer Number (for NJ Contractors only) _____

2. INDIVIDUAL ( ) PARTNERSHIP ( ) JOINT VENTURE ( )CORPORATION(X)

3. OFFICE CONTACT: Name of Individual: Greg Singh
   Telephone Number: 908-301-1040
   Fax Number: 908-301-1056

4. DESIGNATED: Senior Project Supervisor: Anoop Raj
   Telephone Number: 908-519-2113

5. Port Authority Contract Number: 200.200

6 Contract Cost: $372,000

7. Starting Date of Contract: 04/08/2009

8. Proposed Completion Date: 12/30/2009

9. Type of Contractor: Painting

10. Full Description of your work project/work site: BT 200.200 WO # 12

11. Location of your work at project/work site: Port Authority Bus Terminal
    New York, NY

12. Your current Worker's Compensation Insurance Information Company Commerce & Industry Ins Co Policy No: WC5316225 Expiration Date: 08/01/2009

Experience Modification 0.800 Effective Date of you current modification 08/01/2009

Contractors Insurance Program
CONTRACTORS & SUB-CONTRACTORS INFORMATION FORM

13. Worker's Compensation Class Codes of Project/Work Site, including their respective payrolls with are subject to audit:

JOB CLASSIFICATION	W.C. CLASS CODE	ESTIMATED PAYROLL
Painting	5474	$118,000

14. Current General Liability Insurance Information:

Company: Penn National Mutual Cas Ins Co

Policy: CL9-0649952 Expiration Date: 08/01/2009

15. Current Automobile Liability Insurance Information:

Company: Penn National Mutual Cas Ins Co

Policy No: AU9-0649952 Expiration Date: 08/01/2009

Your Insurance Broker or Agent: Atlantic Surety & Insurance Agency

Address: 1767 Morris Avenue, Union, NJ Zip: 07092

Telephone Number: 908-687-0220

Completed By: Greg Singh

Print Name & Title: Greg Singh/Executive Vice President

Date Completed: 4/30/2009

(You may attach a photocopy of your policy and experience modification endorsement.)

Materials Engineering Unit

241 Erie Street, Room 234
Jersey City, NJ 07310
Tel: 201-216-2952 Fax: 201-216-2949

THE PORT AUTHORITY OF NY & NJ

TRANSMITTAL
No. 00011

PROJECT: WO12 South Wing Emerg. Stair Repairs

DATE: 6/23/2009

TO: VRH Construction Corp.
c/o Port Authority of NY & NJ
625 Eight Ave. 2nd Flr. North Bldg
New York, NY 10018

CONTRACT: PABT-200.200 WO12

ATTN: **Anthony Carnabuci**

	STATUS	**LEGEND:**
☐ Shop Drawings	Approved (APP)	New Item (NEW)
☑ Letter	Approved as Corrected (AAC)	Not Approved (NA)
☐ Prints	Approved as Noted (AAN)	Not Reviewed (NR)
☐ Change Order	For Record Only (FRO)	Review With Comments (RWC)
☐ Plans	For Your Information (FYI)	Review With No Comments (RWNC)
☐ Samples	Incomplete (INC)	Superseded (SUPS)
☐ Specifications		
☑ Other: Made from Submittal Set	☐ Attached ☐ Separate Cover Via: Mail	
	Review and Comment	

SUBMITTAL	REV.	DATE	DESCRIPTION	Remark	STATUS
03200-0001	R000	6/23/2009	Desc: Catalog Cut of Red Head® C6, an Epoxy Adhesive to be used with threaded rod or rebar anchors.Ref.: STRUCTURAL NOTES No. 5 on DWG. G003.	#2	NA
03602-0001	R000	6/23/2009	Desc: Product Data Sheet of SikaGrout® 212, a high performance cementitious grout.Ref.: GENERAL NOTES (STRUCTURAL) No. 15 on DWG. S001		APP
03602-0002	R000	6/23/2009	Desc: Product Data Sheet of Sika MonoTop® 611, a one-component polymer-modified silica fume enhanced cmentitious pump and pour mortar.Ref.: CONCRETE REPAIR NOTES No. 5.2 on DWG. S006		APP
03730-0001	R000	6/23/2009	Desc: Product Data Sheet of Sika Armatecâ 110 EpoCem®, a bonding agent and reinforcement protection.	#3	NA
03730-0002	R000	6/23/2009	Desc: Product Data Sheet of SikaTop® 123 PLUSRef.: CONCRETE REPAIR NOTES No. 5.1 on DWG. S006.		APP
07115-0001	R000	6/23/2009	Desc: Catalog Cut of Bituthene® 5000 Ref.: ASPHALT PAVEMENT RESTORATION NOTES No. 3 on DWG. G003		APP
07115-0002	R000	6/23/2009	Desc: Catalog Cut of Bituthene® Deck Prep®, a low viscosity surface treatment used to level and repair rough concrete decks prior to installing Bituthene® 5000.Ref.: ASPHALT PAVEMENT RESTORATION NOTES No. 3 on DWG. G003		APP
07115-0003	R000	6/23/2009	Desc: Catalog Cut of Bituthene® Liquid Membrane, a two component elastomeric liquid applied detailing compound for use with Bituthene® 5000.		APP
07115-0004	R000	6/23/2009	Desc: Catalog Cut of Bituthene® Mastic, a one-part gun or trowel applied mastic for sealing Bituthene membrane terminations and details.		APP
07920-0001	R000	6/23/2009	Desc: Product Data Sheet of Sikaflex®-1a, a one part polyurethane elastomeric sealant/adhesiveRef.: STAIRWAY REPAIR NOTES No. 7 on DWG. G003.	#1	NA

Materials Engineering Unit

241 Erie Street, Room 234
Jersey City, NJ 07310
Tel: 201-216-2952 Fax: 201-216-2949

THE PORT AUTHORITY OF NY & NJ

TRANSMITTAL
No. 00011

PROJECT: WO12 South Wing Emerg. Stair Repairs

DATE: 6/23/2009

TO: VRH Construction Corp.
c/o Port Authority of NY & NJ
625 Eight Ave. 2nd Flr. North Bldg
New York, NY 10018

CONTRACT: PABT-200.200 WO12

ATTN: **Anthony Carnabuci**

	STATUS	LEGEND:
☐ Shop Drawings	Approved (APP)	New Item (NEW)
☑ Letter	Approved as Corrected (AAC)	Not Approved (NA)
☐ Prints	Approved as Noted (AAN)	Not Reviewed (NR)
☐ Change Order	For Record Only (FRO)	Review With Comments (RWC)
☐ Plans	For Your Information (FYI)	Review With No Comments (RWNC)
☐ Samples	Incomplete (INC)	Superseded (SUPS)
☐ Specifications		
☑ Other: Made from Submittal Set	☐ Attached ☐ Separate Cover Via: Mail	
	Review and Comment	

Remarks: 1. STAIRWAY REPAIR NOTES No. 7 on DWG. G003 requires ES-1 Type sealant.
2. STRUCTURAL NOTES No. 5 on DWG. G003 does not allow use of adhesive and chemical anchors.
3. Submitted document does not state and/or clarify the intended use of product.

Approvals shall not relieve the Contractor of any responsibility as required by the Contract or waive any further authority of the Engineer or modify or waive any provision of the subject Contract with regard to this material(s) or its approval.

Material(s), which do not conform to the contract documents, will be subject to rejection at the job site by the Resident Engineer.

If you have any questions, please call Dilip Nisraiyya of my staff at (201) 216-2973. Our fax number is (201) 216-2949.

CC: P. Salvatore w/att., A. Kaprielian w/att., D. Nisraiyya, MF

Signed:
Casimir Bognacki, P.E.
Chief of Materials Engineering

Expedition ®

LETTER OF TRANSMITTAL

Action Key

1 For your records and/or use
2 For price quotation
3 For approval
4 Approved/Reviewed
5 Approved as noted: Re-submission not required
6 Approved as noted: Revise and re-submit
7 Rejected: Re-submit per contract documents

VRH CONSTRUCTION CORP.
General Contractors & Construction Managers

To	The Port Authority of NY & NJ	Transmittal No.	00003
	Two Gateway Center	Job No.	2030WO12
	15th Floor	Project	PANY/NJ-bt-200.200 WO 12
	Newark, NJ 07102		South Wing Emergency Stair Repairs
Attention	Ka Kei Chan		
Phone No.	973-792-4629 Fax 973-792-4602		

We are sending you herewith the following: ☐ Drawings ☒ Shop Drawings ☐ Samples ☐ Specifications ☒ Other:

Via: ☒ Attached ☐ Separate Cover Via Mail

Quantity	Drawing/Submittal No.	Description	Action
8	[redacted]	[redacted]	3
8	[redacted]	[redacted]	3
8	04212-001	Dwg: Title: #247 Screw-On Split Bend-Anchor Desc: #247 Screw-On Split Bend Anchor Arch	3
8	04212-002	Dwg: Title: 316/316L Stainless Steel Desc: 316/316L Stainless Steel → FW	3
8	04212-003	Dwg: Title: Z526 Heavy-Duty Drain Desc: Z526 Heavy-Duty Drain Arch	3
8	[redacted]	[redacted]	3
8	[redacted]	[redacted]	3
8	[redacted]	[redacted]	3
8	[redacted]	[redacted]	3
8	02551-001	Dwg: Title: Detail #21 Deck w/Asphalt Conc. Desc: Detail #21 Deck W/Asphalt Conc. Arch	3
8	02551-002	Dwg: Title: Asphalt Cement (PG-64-22) Desc: Asphalt Cement (PG-64-22) → JV	3

FW & JV

Remarks:	
cc:	P. Salvatore; A. Kaprielian/PANYNJ
Signed	
By	
Date	5/26/2009

Rec 5/28/09

625 Eighth Avenue
2nd Flr, North Building
New York, NY 10018

Phone
212-629-6187
Fax
212-629-9243

LETTER OF TRANSMITTAL

VRH CONSTRUCTION CORP
General Contractors & Construction Managers

Action Key
1 For your records and/or use
2 For price quotation
3 For approval
4 Approved/Reviewed
5 Approved as noted: Re-submission not required
6 Approved as noted: Revise and re-submit
7 Rejected: Re-submit per contract documents

To	The Port Authority of NY & NJ	Transmittal No.	00003
	Two Gateway Center	Job No.	2030WO12
	15th Floor	Project	PANY/NJ-bt-200.200 WO 12
	Newark, NJ 07102		South Wing Emergency Stair Repairs
Attention	Ka Kei Chan		
Phone No.	973-792-4629 Fax 973-792-4602		

We are sending you herewith the followin: ☐ Drawings ☒ Shop Drawings ☐ Samples ☐ Specifications ☒ Other:

Via: ☒ Attached ☐ Separate Cover Via Mail

Quantity	Drawing/Submittal No.	Description	Action
8	[redacted]	[redacted]	3
8	03200-002	Dwg: Title: ASTM A615 Grade 60 Rebar Desc: ASTM A615 Grade 60 Rebar	3
8	[redacted]	[redacted]	3
8	[redacted]	[redacted]	3
8	[redacted]	[redacted]	3
			3

Material & Structural — Dilip — FW

Remarks:

cc: P. Salvatore; A. Kaprielian/PANYNJ

Signed [signature]

By Anthony J. Carnabuci

Date 5/26/2009

625 Eighth Avenue
2nd Flr, North Building
New York, NY 10018

Phone
212-629-6187
Fax
212-629-9243

VRH Construction Corp.
625 Eighth Avenue
2nd Flr, North Building
New York, NY 10018

Phone: 212-629-6187
Fax: 212-629-9243

SUBMITTAL
NO. 03730-002
PACKAGE NO: 03730

TITLE: SikaTop 123 Plus
PROJECT: PANY/NJ-bt-200.200 WO 12
DRAWING:
STATUS: 3
BIC: PANYNJ

REQUIRED START: 5/26/2009
REQUIRED FINISH: 6/9/2009
DAYS HELD: 0
DAYS ELAPSED: 0
DAYS OVERDUE: -14

RECEIVED FROM		SENT TO		RETURNED BY		FORWARDED TO	
TG	JB	PANYNJ	KC	PANYNJ	KC	TG	JB

Revision No.	Description / Remarks	Received	Sent	Returned	Forwarded	Status	Sepias	Prints	Drawing Date	Held	Elapsed
000	SikaTop 123 Plus	5/26/2009	5/26/2009			3	0	8		0	0

[illegible] ON [illegible] 5006

Product Data Sheet
Edition 8.2003
Identification no. 188
SikaTop 123 *Plus*

03730-002
200.200 W.O. 12

SikaTop® 123 *PLUS*

Two-component, polymer-modified, cementitious, non-sag mortar plus FerroGard 901 penetrating corrosion inhibitor

Description

SikaTop 123 *PLUS* is a two-component, polymer-modified, portland cement, fast-setting, non-sag mortar. It is a high performance repair mortar for vertical and overhead surfaces, and offers the additional benefit of FerroGard 901, a penetrating corrosion inhibitor.

Where to Use

- On grade, above, and below grade on concrete and mortar.
- On vertical and overhead surfaces.
- As a structural repair material for parking structures, industrial plants, water/waste water treatment facilities, roads, walkways, bridges, tunnels, dams, ramps, etc.
- Approved for repairs over cathodic protection systems.

Advantages

- High compressive and flexural strengths.
- High early strengths.
- Increased freeze/thaw durability and resistance to de-icing salts.
- Compatible with coefficient of thermal expansion of concrete - Passes ASTM C-884 (modified).
- Increased density - improved carbon dioxide resistance (carbonation) without adversely affecting water vapor transmission (not a vapor barrier).
- Enhanced with FerroGard 901, a penetrating corrosion inhibitor - reduces corrosion even in the adjacent concrete.
- Not flammable, non-toxic.
- Conforms to ECA/USPHS standards for surface contact with potable water.
- USDA approved.
- ANSI/NSF Standard 61 potable water approved.

Yield

0.39 cu. ft./unit.

Packaging

Component 'A' - 1 gal. plastic jug; 4/carton. **Component 'B'** - 44 lb. multi-wall bag.

Typical Data ***(Material and curing conditions @ 73°F (23°C) and 50% R.H.)***

Shelf Life	One year in original, unopened packaging.		
Storage Conditions	Store dry at 40°-95°F. **Condition material to 65°-75°F. before using.** Protect Component 'A' from freezing. If frozen, discard.		
Color	Concrete gray when mixed.		
Mixing Ratio	Plant-proportioned kit.		
Application Time	Approximately 15 min. after adding Component 'B' to Component 'A'. Application time is dependent on temperature and relative humidity.		
Finishing Time	20 to 60 min after combining components: depends on temperature, relative humidity, and type of finish desired.		
Density (wet Mix)	132 lbs./cu. ft. (2.2 kg./l)		
Flexural Strength (ASTM C-293)		**28 days**	2,000 psi (13.8 MPa)
Splitting Tensile Strength (ASTM C-496)		**28 days**	900 psi (6.2 MPa)
Bond Strength* (ASTM C-882 modified)		**28 days**	2,200 psi (15.2 MPa)

Compressive Strength (ASTM C-109)

1 day	3,500 psi	(24.1 MPa)
7 days	6,000 psi	(41.4 MPa)
28 days	7,000 psi	(48.3 MPa)

Permeability (AASHTO T-277)
28 days Approximately 500 Coulombs. Electrical resistivity (ohm-cm) 27,000

Freeze/Thaw Resistance (ASTM C-666) 300 cycles 98%

Corrosion Testing for FerroGard 901

Cracked Beam Corrosion Tests:
Reduced corrosion rates 63% versus control specimens. ASTM G109 modified after 400 days

* Mortar scrubbed into substrate.

Substrate Concrete, mortar, and masonry products.

How to Use

Surface Preparation **Concrete/Mortar:** Remove all deteriorated concrete, dirt, oil, grease, and all bond-inhibiting materials from surface. Be sure repair area is not less than 1/8 inch in depth. Preparation work should be done by high pressure water blast, scabbler, or other appropriate mechanical means to obtain an exposed aggregate surface with a minimum surface profile of ±1/16 in. (CSP-5) Saturate surface with clean water. Substrate should be saturated surface dry (SSD) with no standing water during application. **Reinforcing Steel:** Steel reinforcement should be thoroughly prepared by mechanical cleaning to remove all traces of rust. Where corrosion has occurred due to the presence of chlorides, the steel should be high-pressure washed with clean water after mechanical cleaning. For priming of reinforcing steel use Sika Armatec 110 EpoCem (consult Technical Data Sheet).

Priming **Concrete Substrate:** Prime the prepared substrate with a brush or sprayed applied coat of Sika Armatec 110 EpoCem (consult Technical Data Sheet). Alternately, a scrub coat of Sika Top 123 can be applied prior to placement of the mortar. The repair mortar has to be applied into the wet scrub coat before it dries.

Mixing Pour Component 'A' into mixing container. Add Component 'B' while mixing continuously. Mix mechanically with a low-speed drill (400 - 600 rpm) and mixing paddle or mortar mixer. Mix to a uniform consistency, maximum 3 minutes. Manual mixing can be tolerated only for less than a full unit. Thorough mixing and proper proportioning of the two components is necessary.

Application & Finish SikaTop 123 *PLUS* **must be scrubbed** into the substrate, filling all pores and voids. Force material against edge of repair, working toward center. After filling repair, consolidate, then screed. Material may be applied in multiple lifts. The thickness of each lift, not to be less than 1/8 inch minimum or more than 1.5 inches maximum. Where multiple lifts are required score top surface of each lift to produce a roughened surface for next lift. Allow preceding lift to reach final set, 30 minutes minimum, before applying fresh material. Saturate surface of the lift with clean water. Scrub fresh mortar into preceding lift. Allow mortar or concrete to set to desired stiffness, then finish with wood or sponge float for a smooth surface.

Curing As per ACI recommendations for portland cement concrete, curing is required. Moist cure with wet burlap and polyethylene, a fine mist of water or a water based*, compatible curing compound. Curing compounds adversely affect the adhesion of following lifts of mortar, leveling mortar or protective coatings. Moist curing should commence immediately after finishing. If necessary protect newly applied material from direct sunlight, wind, rain and frost.

*Pretesting of curing compound is recommended.

Limitations

- **Application thickness:** Minimum 1/8 inch (3 mm). Maximum in one lift - 1.5 in. (38 mm).
- Minimum ambient and surface temperatures 45°F (7°C) and rising at time of application.
- Do not use solvent-based curing compound.
- Size, shape and depth of repair must be carefully considered and consistent with practices recommended by ACI. For additional information, contact Technical Service.
- For additional information on substrate preparation, refer to ICRI Guideline No. 03732 Coatings, and Polymer Overlays".
- If aggressive means of substrate preparation is employed, substrate strength should be tested in accordance with ACI 503 Appendix A prior to the repair application.
- As with all cement based materials, avoid contact with aluminum to prevent adverse chemical reaction and possible product failure. Insulate potential areas of contact by coating aluminum bars, rails, posts etc. with an appropriate epoxy such as Sikadur Hi-Mod 32.

Caution **Component 'A' - Irritant** - May cause skin/eye/respiratory irritation. Avoid breathing vapors. Use with adequate ventilation. Avoid skin and eye contact. Safety goggles and rubber gloves are recommended. **Component 'B' - Irritant; suspect carcinogen** - Contains portland cement and sand (crystalline silica). Skin and eye irritant. Avoid contact. Dust may cause respiratory tract irritation. Avoid breathing dust. Use only with adequate ventilation. May cause delayed lung injury (silicosis). IARC lists crystalline silica as having sufficient evidence of carcinogenicity in laboratory animals and limited evidence of carcinogenicity in humans. NTP also lists crystalline silica as a suspect carcinogen. Use of safety goggles and chemical resistant gloves is recommended. If PELs are exceeded, an appropriate, NIOSH approved respirator is required. Remove contaminated clothing.

First Aid In case of skin contact, wash thoroughly with soap and water. For eye contact, flush immediately with plenty of water for at least 15 minutes, and contact a physician. For respiratory problems, remove person to fresh air.

Clean Up In case of spillage, scoop or vacuum into appropriate container, and dispose of in accordance with current, applicable local, state and federal regulations. Keep container tightly closed and in an upright position to prevent spillage and leakage.

Mixed components: Uncured material can be removed with water. Cured material can only be removed mechanically.

KEEP CONTAINER TIGHTLY CLOSED
NOT FOR INTERNAL CONSUMPTION

KEEP OUT OF REACH OF CHILDREN
FOR INDUSTRIAL USE ONLY

CONSULT MATERIAL SAFETY DATA SHEET FOR MORE INFORMATION

Sika warrants this product for one year from date of installation to be free from manufacturing defects and to meet the technical properties on the current technical data sheet if used as directed within shelf life. User determines suitability of product for intended use and assumes all risks. Buyer's sole remedy shall be limited to the purchase price or replacement of product exclusive of labor or cost of labor.

NO OTHER WARRANTIES EXPRESS OR IMPLIED SHALL APPLY INCLUDING ANY WARRANTY OF MERCHANTABILITY OR FITNESS FOR A PARTICULAR PURPOSE. SIKA SHALL NOT BE LIABLE UNDER ANY LEGAL THEORY FOR SPECIAL OR CONSEQUENTIAL DAMAGES.

Visit our website at www.sikausa.com 1-800-933-SIKA NATIONWIDE

Regional Information and Sales Centers. For the location of your nearest Sika sales office, contact your regional center.

Sika Corporation
201 Polito Avenue
Lyndhurst, NJ 07071
Phone: 800-933-7452
Fax: 201-933-6225

Sika Canada Inc.
601 Delmar Avenue
Pointe Claire
Quebec H9R 4A9
Phone: 514-697-2610
Fax: 514-694-2792

Sika Mexicana S.A. de C.V.
Carretera Libre Celaya Km. 8.5
Corregidora, Queretaro
C.P. 76920 A.P. 136
Phone: 52 42 250122
Fax: 52 42 25 0537

QUALITY ISO 9001 9002 ACHIEVEMENT

MATERIAL SAFETY DATA SHEET

Sikatop 111, 121, 122, 123, & 126 Plus - Part A

HMIS

HEALTH	1
FLAMMABILITY	0
REACTIVITY	0
PERSONAL PROTECTION	C

1. Product And Company Identification

Supplier
Sika Corporation
201 Polito Ave
Lyndhurst, NJ 07071

Company Contact: EHS Department
Telephone Number: 201-933-8800
FAX Number: 201-933-9379
Web Site: www.sikausa.com

Manufacturer
Sika Corporation
201 Polito Ave
Lyndhurst, NJ 07071

Company Contact: EHS Department
Telephone Number: 201-933-8800
FAX Number: 201-933-9379
Web Site: www.sikausa.com

Supplier Emergency Contacts & Phone Number
CHEMTREC: 800-424-9300
INTERNATIONAL: 703-527-3887

Manufacturer Emergency Contacts & Phone Number
CHEMTREC: 800-424-9300
INTERNATIONAL: 703-527-3887

Issue Date: 10/01/2007

Product Name: Sikatop 111, 121, 122, 123, & 126 Plus - Part A
CAS Number: Not Established
MSDS Number: 4184
Product Code: Various

Synonyms
SIKATOP 111 PLUS - PART A
SIKATOP 121 PLUS - PART A
SIKATOP 122 PLUS - PART A
SIKATOP 123 PLUS - PART A
SIKATOP 126 PLUS - PART A

2. Composition/Information On Ingredients

This products contains no hazardous ingredients when evaluated by criteria established in the OSHA Hazard Communication Standard (29 CFR 1910.1200).

3. Hazards Identification

Eye Hazards
May cause eye irritation.

Skin Hazards
May cause skin irritation.

Ingestion Hazards
May be harmful if swallowed.

MATERIAL SAFETY DATA SHEET

Sikatop 111, 121, 122, 123, & 126 Plus - Part A

3. Hazards Identification - Continued

Inhalation Hazards

Moderate respiratory irritant.

4. First Aid Measures

Eye

In case of contact, hold eyelids apart and immediately flush eyes with plenty of tepid water for at least 15 minutes. Get medical attention immediately if irritation develops and persists.

Skin

In case of contact, immediately flush skin with soap and plenty of tepid water for at least 15 minutes. Get medical attention immediately if irritation (redness, rash, blistering) develops and persists.

Ingestion

If victim is fully conscious, give one or two cups of water or milk to drink. Call a physician if necessary.

Inhalation

Remove to fresh air. If not breathing, give artificial respiration. Call a physician if needed.

5. Fire Fighting Measures

Flash Point: >220 °F

Fire And Explosion Hazards

Material may splatter above 212F. Polymer film can burn.

Extinguishing Media

In case of fire, use water spray (fog) foam, dry chemical, or CO2.

Fire Fighting Instructions

In the event of a fire, firefighters should wear full protective clothing and NIOSH-approved self-contained breathing apparatus with a full facepiece operated in the pressure demand or other positive pressure mode.

6. Accidental Release Measures

Avoid release to the environment. Use appropriate Personal Protective Equipment (PPE). Contain spill and collect with absorbent material and transfer into suitable containers. Do not flush to sewer or allow to enter waterways. Ventilate enclosed area.

7. Handling And Storage

Handling And Storage Precautions

Keep out of reach of children. Store in a cool, dry, well ventilated area. Keep containers tightly closed.

Work/Hygienic Practices

Wash thoroughly with soap and water after handling.

8. Exposure Controls/Personal Protection

Engineering Controls

Use with adequate general and local exhaust ventilation. Refer to the current edition of "Industrial Ventilation: A Manual of Recommended Practice" published by the American Conference of Governmental Industrial Hygienists for information on the design, installation, use, and maintenance of exhaust systems.

Eye/Face Protection

Faceshield over safety glasses or goggles.

Skin Protection

Wear long sleeve shirt, long pants, chemical resistant gloves.

MATERIAL SAFETY DATA SHEET

Sikatop 111, 121, 122, 123, & 126 Plus - Part A

8. Exposure Controls/Personal Protection - Continued

Respiratory Protection
A respirator protection program that meets 29 CFR 1910.134 requirement must be followed whenever workplace conditions warrant a respirator's use.

9. Physical And Chemical Properties

Appearance
Green Liquid

Odor
Acrylic smell

Chemical Type: Mixture
Physical State: Liquid
Percent VOCs: 0%
Packing Density: 8.5 pounds/gallon
Vapor Density: >AIR
Evaporation Rate: Slower then ether

10. Stability And Reactivity

Stability: Stable
Hazardous Polymerization: Will not occur

Conditions To Avoid (Stability)
Avoid Freezing

Incompatible Materials
None Known

Hazardous Decomposition Products
None Known

Conditions To Avoid (Polymerization)
None Known

11. Toxicological Information

Conditions Aggravated By Exposure
None Known

12. Ecological Information

No Data Available...

13. Disposal Considerations

Dispose in accordance with applicable federal, state and local govemment regulations. Waste generators must determine whether a discarded material is classified as a hazardous waste. USEPA guidelines for the classification determination are listed in 40 CFR Parts 261.3. Additionally, waste generators must consult state and local hazardous waste regulations to ensure complete and accurate classification.

14. Transport Information

Proper Shipping Name
Not Regulated by the USDOT.

15. Regulatory Information

U.S. Regulatory Information

All ingredients of this product are listed or are excluded from listing under the U.S. Toxic Substances Control Act (TSCA) Chemical Substance Inventory.

SARA Section 313 Notification

This product does not contain any ingredients regulated under Section 313 of the Emergency Planning and Community Right-To-Know Act of 1986 or 40 CFR 372.

16. Other Information

HMIS Rating

Health: 1
Fire: 0
Reactivity: 0
PPE: C

Revision/Preparer Information

MSDS Preparer: EHS Department
MSDS Preparer Phone Number: 201-933-8800
This MSDS Supercedes A Previous MSDS Dated: 04/26/2004

Disclaimer

The information contained in this Material Safety Data Sheet applies only to the actual Sika Corporation ("Sika") product identified and described herein. This information is not intended to address, nor does it address the use or application of the identified Sika product in combination with any other material, product or process. All of the information set forth herein is based on technical data regarding the identified product that Sika believes to be reliable as of the date hereof. Prior to each use of any Sika product, the user must always read and follow the warnings and instructions on the product's current Technical Data Sheet, product label and Material Safety Data Sheet for each Sika product, which are available at web site and/or telephone number listed in Section 1 of this MSDS.

SIKA MAKES NO WARRANTIES EXPRESS OR IMPLIED AND ASSUMES NO LIABILITY ARISING FROM THIS INFORMATION OR ITS USE. SIKA SHALL NOT BE LIABLE UNDER ANY LEGAL THEORY FOR SPECIAL OR CONSEQUENTIAL DAMAGES AND SHALL NOT BE RESPONSIBLE FOR THE USE OF THIS PRODUCT IN A MANNER TO INFRINGE ON ANY PATENT OR ANY OTHER INTELLECTUAL PROPERTY RIGHTS HELD BY OTHERS.

All sales of Sika products are subject to its current terms and conditions of sale available at www.sikacorp.com or 201-933-8800.

SIKA CORPORATION

Printed Using MSDS Generator™ 2000

MATERIAL SAFETY DATA SHEET

Sikatop 111, 122, & 123 Plus - Part B

HMIS	
HEALTH	*2
FLAMMABILITY	0
REACTIVITY	0
PERSONAL PROTECTION	C

1. Product And Company Identification

Supplier
Sika Corporation
201 Polito Ave
Lyndhurst, NJ 07071

Company Contact: EHS Department
Telephone Number: 201-933-8800
FAX Number: 201-933-9379
Web Site: www.sikausa.com

Manufacturer
Sika Corporation
201 Polito Ave
Lyndhurst, NJ 07071

Company Contact: EHS Department
Telephone Number: 201-933-8800
FAX Number: 201-933-9379
Web Site: www.sikausa.com

Supplier Emergency Contacts & Phone Number
CHEMTREC: 800-424-9300
INTERNATIONAL: 703-527-3887

Manufacturer Emergency Contacts & Phone Number
CHEMTREC: 800-424-9300
INTERNATIONAL: 703-527-3887

Issue Date: 10/01/2007

Product Name: Sikatop 111, 122, & 123 Plus - Part B
CAS Number: Not Established
Chemical Family: Cement based repair mortar
MSDS Number: 4185
Product Code: Various

2. Composition/Information On Ingredients

Ingredient Name	CAS Number		Percent Of Total Weight
PORTLAND CEMENT	65997-15-1		
SILICA, QUARTZ	14808-60-7		

3. Hazards Identification

Eye Hazards
May cause eye irritation.

Skin Hazards
May cause skin irritation.

Ingestion Hazards
May be harmful if swallowed.

Inhalation Hazards
Breathing dust may cause nose, throat or lung irritation. Respirable crystalline silica can cause silicosis, a fibrosis (scarring) of the lungs. Silicosis may be progressive.

MATERIAL SAFETY DATA SHEET

Sikatop 111, 122, & 123 Plus - Part B

3. Hazards Identification - Continued

Chronic/Carcinogenicity Effects

Contains Silica Quartz. Inhalation of quartz is classified as a human carcinogen. Chronic overexposure can cause silicosis, a form of lung scarring that can cause shortness of breath, reduced lung function, and insevere cases, death.

4. First Aid Measures

Eye

In case of contact, hold eyelids apart and immediately flush eyes with plenty of tepid water for at least 15 minutes. Get medical attention immediately if irritation develops and persists.

Skin

In case of contact, immediately flush skin with soap and plenty of tepid water for at least 15 minutes. Get medical attention immediately if irritation (redness, rash, blistering) develops and persists.

Ingestion

If victim is fully conscious, give one or two cups of water or milk to drink. Never give anything by mouth to an unconscious victim.Call a physician if necessary.

Inhalation

Remove to fresh air. If not breathing, give artificial respiration. Call a physician if needed.

5. Fire Fighting Measures

Flash Point: N/A °F

Fire And Explosion Hazards

None known.

Extinguishing Media

Use the appropriate extinguishing media for the surrounding fire.

Fire Fighting Instructions

In the event of a fire, firefighters should wear full protective clothing and NIOSH-approved self-contained breathing apparatus with a full facepiece operated in the pressure demand or other positive pressure mode.

6. Accidental Release Measures

Avoid release to the environment. Using appropriate personal protective equipment (PPE), shovel material into waste containers taking care to minimize dust. Dampen if necessary to control dust. Vacuum clean dust with equipment fitted with High Efficiency Particulate Air (HEPA) filters.

7. Handling And Storage

Handling And Storage Precautions

Keep out of reach of children. Store in a cool, dry, well ventilated area. Keep containers tightly closed.

Work/Hygienic Practices

Wash thoroughly with soap and water after handling.

8. Exposure Controls/Personal Protection

Engineering Controls

Use of a system of local and/or general exhaust is recommended to keep employee below applicable exposure limits. Refer to the current edition of "Industrial Ventilation: A Manual of Recommended Practice" published by the American Conference of Governmental Industrial Hygienists for information on the design, installation, use, and maintenance of exhaust systems.

MATERIAL SAFETY DATA SHEET

Sikatop 111, 122, & 123 Plus - Part B

8. Exposure Controls/Personal Protection - Continued

Eye/Face Protection
Safety glasses with side shields or goggles.

Skin Protection
Chemical-resistant gloves. Lab coat or other work clothing to prevent skin exposure (Long sleeve shirt and long pants). Launder before reuse.

Respiratory Protection
A respirator protection program that meets 29 CFR 1910.134 requirement must be followed whenever workplace conditions warrant a respirator's use. In areas where the Permissible Exposure Limits are exceeded, use a properly fitted NIOSH-approved respirator.

Ingredient(s) - Exposure Limits
PORTLAND CEMENT
ACGIH TLV-TWA 10 mg/m3
OSHA PEL-TWA 50 mppcf
SILICA, QUARTZ
ACGIH TLV-TWA 0.05 mg/m3 (Notice of Intended Change)
ACGIH TLV-TWA 0.025 mg/m3 (Proposed)
OSHA PEL-TWA 30/%SiO2+2 mg/m3
OSHA PEL-TWA 10/%SiO2+2 mg/m3
OSHA PEL-TWA 250/%SiO+5 mppcf

9. Physical And Chemical Properties

Appearance
Grey Powder

Odor
None

Chemical Type: Mixture
Physical State: Solid
Specific Gravity: 2-3 g/cm3

10. Stability And Reactivity

Stability: Stable
Hazardous Polymerization: Will not occur

Incompatible Materials
None Known

Hazardous Decomposition Products
None Known

Conditions To Avoid (Polymerization)
None Known

11. Toxicological Information

Conditions Aggravated By Exposure
None Known

Ingredient(s) - Carginogenicity
SILICA, QUARTZ
NTP - Listed On The National Toxicology Program
Listed In The IARC Monographs

MATERIAL SAFETY DATA SHEET

Sikatop 111, 122, & 123 Plus - Part B

12. Ecological Information

No Data Available...

13. Disposal Considerations

Dispose in accordance with applicable federal, state and local government regulations. Waste generators must determine whether a discarded material is classified as a hazardous waste. USEPA guidelines for the classification determination are listed in 40 CFR Parts 261.3. Additionally, waste generators must consult state and local hazardous waste regulations to ensure complete and accurate classification.

14. Transport Information

Proper Shipping Name

Not Regulated by the USDOT.

15. Regulatory Information

U.S. Regulatory Information

All ingredients of this product are listed or are excluded from listing under the U.S. Toxic Substances Control Act (TSCA) Chemical Substance Inventory.

Ingredient(s) - State Regulations

PORTLAND CEMENT
- New Jersey - Workplace Hazard
- Pennsylvania - Workplace Hazard

SILICA, QUARTZ
- New Jersey - Workplace Hazard
- Pennsylvania - Workplace Hazard
- California - Proposition 65
- Massachusetts - Hazardous Substance

16. Other Information

HMIS Rating

Health: *2
Fire: 0
Reactivity: 0
PPE: C

Revision/Preparer Information

MSDS Preparer: EHS Department
MSDS Preparer Phone Number: 201-933-8800
This MSDS Supercedes A Previous MSDS Dated: 11/09/2005

Disclaimer

The information contained in this Material Safety Data Sheet applies only to the actual Sika Corporation ("Sika") product identified and described herein. This information is not intended to address, nor does it address the use or application of the identified Sika product in combination with any other material, product or process. All of the information set forth herein is based on technical data regarding the identified product that Sika believes to be reliable as of the date hereof. Prior to each use of any Sika product, the user must always read and follow the warnings and instructions on the product's current Technical Data Sheet, product label and Material Safety Data Sheet for each Sika product, which are available at web site and/or telephone number listed in Section 1 of this MSDS.

SIKA MAKES NO WARRANTIES EXPRESS OR IMPLIED AND ASSUMES NO LIABILITY ARISING FROM THIS INFORMATION OR ITS USE. SIKA SHALL NOT BE LIABLE UNDER ANY LEGAL THEORY FOR SPECIAL OR

Disclaimer - Continued

CONSEQUENTIAL DAMAGES AND SHALL NOT BE RESPONSIBLE FOR THE USE OF THIS PRODUCT IN A MANNER TO INFRINGE ON ANY PATENT OR ANY OTHER INTELLECTUAL PROPERTY RIGHTS HELD BY OTHERS.

All sales of Sika products are subject to its current terms and conditions of sale available at www.sikacorp.com or 201-933-8800.

SIKA CORPORATION

Printed Using MSDS Generator™ 2000

VRH Construction Corp.

625 Eighth Avenue
2nd Flr, North Building
New York, NY 10018

Phone: 212-629-6187
Fax: 212-629-9243

SUBMITTAL NO. 07920-001
PACKAGE NO: 07920

TITLE: Sikaflex-1a
PROJECT: PANY/NJ-bt-200.200 WO 12
DRAWING:
STATUS: 3
BIC: PANYNJ

REQUIRED START: 5/26/2009
REQUIRED FINISH: 6/9/2009
DAYS HELD: 0
DAYS ELAPSED: 0
DAYS OVERDUE: -14

RECEIVED FROM		SENT TO		RETURNED BY		FORWARDED TO	
TG	JB	PANYNJ	KC	PANYNJ	KC	TG	JB

Revision No.	Description / Remarks	Received	Sent	Returned	Forwarded	Status	Sepias	Prints	Drawing Date	Held	Elapsed
000	Sikaflex-1a	5/26/2009	5/26/2009			3	0	8		0	0

Expedition®

Product Data Sheet
Edition 4.13.2009
Identification no. 431
Sikaflex-1a

07920-001
200.200 W.O. 12

SEALANT-WATERPROOFING & RESTORATION INSTITUTE
Issued to: Sika Corporation
Product: Sikaflex 1A Construction Sealant
C719: Pass ✓ Ext.+35% Comp.-35%
Substrate: Mortar, Aluminum, Glass
C661: Rating 40
Validation Date: 12/22/06 - 12/21/11
No. 1206-S1A11 Copyright © 2006
SEALANT VALIDATION
www.swrionline.org

Sikaflex®-1a

One part polyurethane, elastomeric sealant/adhesive

Description

Sikaflex-1a is a premium-grade, high-performance, moisture-cured, 1-component, polyurethane-based, non-sag elastomeric sealant. Meets Federal specification TT-S-00230C, Type II, Class A. Meets ASTM C-920, Type S, Grade NS, Class 35, use T, NT, O, M, G, I; Canadian standard CAN/CGSB 19.13-M87.

Where to Use

- Designed for all types of joints where maximum depth of sealant will not exceed 1/2 in.
- Excellent for small joints and fillets, windows, door frames, reglets, flashing, common roofing detail applications, and many construction adhesive applications.
- Suitable for vertical and horizontal joints; readily placeable at 40°F.
- Has many applications as an elastic adhesive between materials with dissimilar coefficients of expansion.
- Submerged conditions, such as canal and reservoir joints.

Advantages

- Eliminates time, effort, and equipment for mixing, filling cartridges, pre-heating or thawing, and cleaning of equipment.
- Fast tack-free and final cure times.
- High elasticity - cures to a tough, durable, flexible consistency with exceptional cut and tear-resistance.
- Stress relaxation.
- Excellent adhesion - bonds to most construction materials without a primer.
- Excellent resistance to aging, weathering.
- Proven in tough climates around the world.
- NSF Registered, meets 1998 USDA guidelines.
- Odorless, non-staining.
- Jet fuel resistant.
- NSF Certified to NSF/ANSI Standard 61 for potable water contact.
- Urethane-based; suggested by EPA for radon reduction.
- Paintable with water-, oil- and rubber-based paints.
- Capable of ±35% joint movement.

Coverage

10.1 fl. oz. cartridge seals 12.4 lineal ft. of 1/2 x 1/4 in. joint. 20 fl. oz. uni-pac sausage seals 24 lineal ft. of 1/2 x 1/4 in. joint.

Packaging

Disposable 10.1 fl. oz., moisture-proof composite cartridges, 24/case; and uni-pac sausages, 20 fl. oz., 20/carton.

Typical Data *(Material and curing conditions @ 73°F (23°C) and 50% R.H.)*

Shelf Life

10.1 fl. oz. cartridges	12 months
20 fl. oz. uni-pac sausages	12 months
5 gallon pail	6 months
55 gallon drum	6 months

Storage Conditions Store at 40°-95°F (4°-35°C). Condition material to 65°-75°F before using.

Colors White, colonial white, aluminum gray, limestone, black, dark bronze, capitol tan. Special architectural colors on request.

Application Temperature 40° to 100°F. Sealant should be installed when joint is at mid-range of its anticipated movement.

Service Range -40° to 170°F

Curing Rate

Tack-free time	4 hours
Tack-free to touch	3 hours
Final cure	4 to 7 days

Tear Strength (ASTM D-624) 55 lb./in.

Shore A Hardness (ASTM D-2240) 21 day 40±5

Tensile Properties (ASTM D-412)

21 day	Tensile Stress		175 psi (1.21 MPa)
	Elongation at Break		550%
	Modulus of Elasticity	25%	35 psi (0.24 MPa)
		50%	60 psi (0.41 MPa)
		100%	85 psi (0.59 MPa)

Adhesion in Peel (TT-S-00230C, ASTM C 794)

Substrate	Peel Strength	Adhesion Loss
Concrete	20 lb.	0%
Aluminum	20 lb.	0%
Glass	20 lb.	0%

Weathering Resistance Excellent

Chemical Resistance Good resistance to water, diluted acids, and diluted alkalines. Consult Technical Service for specific data.

How to Use

Surface Preparation

Clean all surfaces. Joint walls must be sound, clean, dry, frost-free, and free of oil and grease. Curing compound residues and any other foreign matter must be thoroughly removed. Install bond breaker tape or backer rod to prevent bond at base of joint.

Priming

Priming is not usually necessary. Most substrates only require priming if testing indicates a need or where sealant will be subjected to water immersion after cure.

Consult Sikaflex Primer Technical Data Sheet or Technical Service for additional information on priming.

Linear Feet of Sealant per Gallon

Width \ Depth	¼	½	¾	1	1¼	1½
¼	308.0					
½	154.0	77.0				
¾	102.7	51.3	34.2			
1	77.0	38.5	25.7	19.3		
1¼	61.6	30.8	20.5	15.4	12.3	
1½	51.3	25.7	17.1	12.8	10.3	8.6

Application

Recommended application temperatures: 40°-100°F. For cold weather application, condition units at approximately 70°F; remove prior to using.

For best performance, Sikaflex-1a should be gunned into joint when joint slot is at mid-point of its designed expansion and contraction.

Place nozzle of gun into bottom of the joint and fill entire joint. Keep the nozzle in the sealant, continue on with a steady flow of sealant preceding the nozzle to avoid air entrapment.

Avoid overlapping of sealant to eliminate entrapment of air. Tool sealant to ensure full contact with joint walls and remove air entrapment. Joint dimension should allow for 1/4 inch minimum and 1/2 inch maximum thickness for sealant. Proper design is 2:1 width to depth ratio.

For use in horizontal joints in traffic areas, the absolute minimum depth of the sealant is 1/2 in. and closed cell backer rod is recommended.

Limitations

- Allow 1-week cure at standard conditions when using Sikaflex-1a in total water immersion situations and prior to painting.
- When overcoating with water, oil and rubber based paints, compatibility and adhesion testing is essential.
- Avoid exposure to high levels of chlorine. (Maximum continuous level is 5 ppm of chlorine.)
- Maximum depth of sealant must not exceed 1/2 in.; minimum depth is 1/4 in.
- Maximum expansion and contraction should not exceed 25% of average joint width.
- Do not cure in the presence of curing silicone sealants.
- Avoid contact with alcohol and other solvent cleaners during cure.
- Do not apply when moisture-vapor-transmission condition exists from the substrate as this can cause bubbling within the sealant.
- Use opened cartridges and uni-pac sausages the same day.
- When applying sealant, avoid air-entrapment.
- Since system is moisture-cured, permit sufficient exposure to air.
- White color tends to yellow slightly when exposed to ultraviolet rays.
- Light colors can yellow if exposed to direct gas fired heating element.
- The ultimate performance of Sikaflex-1a depends on good joint design and proper application with joint surfaces properly prepared.
- The depth of sealant in horizontal joints subject to traffic is 1/2 in.
- Do not tool with detergent or soap solutions.
- Do not use in contact with bituminous/asphaltic materials.

Caution

Irritant

Keep away from open flames and high heat. Contains xylene; avoid breathing vapors. Use with adequate ventilation.

Combustible

Avoid skin and eye contact. Use of NIOSH approved organic vapor respirator, safe and chemical-resistant gloves recommended. Remove contaminated clothing and shoes.

First Aid

In case of skin contact, wash thoroughly with soap and water. For eye contact, flush immediately with plenty of water for at least 15 minutes; contact physician. Wash clothing before re-use. Discard contaminated shoes.

Clean Up

Uncured material can be removed with approved solvent. Cured material can only be removed mechanically. For spillage, collect, absorb, and dispose of in accordance with current, applicable local, state, and federal regulations.

KEEP CONTAINER TIGHTLY CLOSED • KEEP OUT OF REACH OF CHILDREN • NOT FOR INTERNAL CONSUMPTION • FOR INDUSTRIAL USE ONLY

All information provided by Sika Corporation ("Sika") concerning Sika products, including but not limited to, any recommendations and advice relating to the application and use of Sika products, is given in good faith based on Sika's current experience and knowledge of its products when properly stored, handled and applied under normal conditions in accordance with Sika's instructions. In practice, the differences in materials, substrates, storage and handling conditions, actual site conditions and other factors outside of Sika's control are such that Sika assumes no liability for the provision of such information, advice, recommendations or instructions related to its products, nor shall any legal relationship be created by or arise from the provision of such information, advice, recommendations or instructions related to its products. The user of the Sika product(s) must test the product(s) for suitability for the intended application and purpose before proceeding with the full application of the product(s). Sika reserves the right to change the properties of its products without notice. All sales of Sika product(s) are subject to its current terms and conditions of sale which are available at www.sikacorp.com or by calling 800-933-7452.

Prior to each use of any Sika product, the user must always read and follow the warnings and instructions on the product's most current Technical Data Sheet, product label and Material Safety Data Sheet which are available online at www.sikaconstruction.com or by calling Sika's Technical Service Department at 800-933-7452. Nothing contained in any Sika materials relieves the user of the obligation to read and follow the warnings and instruction for each Sika product as set forth in the current Technical Data Sheet, product label and Material Safety Data Sheet prior to product use.

LIMITED WARRANTY: Sika warrants this product for one year from date of installation to be free from manufacturing defects and to meet the technical properties on the current Technical Data Sheet if used as directed within shelf life. User determines suitability of product for intended use and assumes all risks. Buyer's sole remedy shall be limited to the purchase price or replacement of product exclusive of labor or cost of labor. NO OTHER WARRANTIES EXPRESS OR IMPLIED SHALL APPLY INCLUDING ANY WARRANTY OF MERCHANTABILITY OR FITNESS FOR A PARTICULAR PURPOSE. SIKA SHALL NOT BE LIABLE UNDER ANY LEGAL THEORY FOR SPECIAL OR CONSEQUENTIAL DAMAGES. SIKA SHALL NOT BE RESPONSIBLE FOR THE USE OF THIS PRODUCT IN A MANNER TO INFRINGE ON ANY PATENT OR ANY OTHER INTELLECTUAL PROPERTY RIGHTS HELD BY OTHERS.

Visit our website at www.sikaconstruction.com 1-800-933-SIKA NATIONWIDE

Regional Information and Sales Centers. For the location of your nearest Sika sales office, contact your regional center.

Sika Corporation
201 Polito Avenue
Lyndhurst, NJ 07071
Phone: 800-933-7452
Fax: 201-933-6225

Sika Canada Inc.
601 Delmar Avenue
Pointe Claire
Quebec H9R 4A9
Phone: 514-697-2610
Fax: 514-694-2792

Sika Mexicana S.A. de C.V.
Carretera Libre Celaya Km. 8.5
Fracc. Industrial Balvanera
Corregidora, Queretaro
C.P. 76920
Phone: 52 442 2385800
Fax: 52 442 2250537

ISO 9002:2000

Sika and Sikaflex are registered trademarks.
Made in USA. Printed in Canada.

MATERIAL SAFETY DATA SHEET

Sikaflex® 1A (All Colors)

HMIS	
HEALTH	*2
FLAMMABILITY	1
REACTIVITY	0
PERSONAL PROTECTION	C

1. Product And Company Identification

Supplier
Sika Corporation
201 Polito Ave
Lyndhurst, NJ 07071

Company Contact: EHS Department
Telephone Number: 201-933-8800
FAX Number: 201-933-9379
Web Site: www.sikausa.com

Manufacturer
Sika Corporation
201 Polito Ave
Lyndhurst, NJ 07071

Company Contact: EHS Department
Telephone Number: 201-933-8800
FAX Number: 201-933-9379
Web Site: www.sikausa.com

Supplier Emergency Contacts & Phone Number
CHEMTREC: 800-424-9300
INTERNATIONAL: 703-527-3887

Manufacturer Emergency Contacts & Phone Number
CHEMTREC: 800-424-9300
INTERNATIONAL: 703-527-3887

Issue Date: 08/09/2007

Product Name: Sikaflex® 1A (All Colors)
CAS Number: Not Established
Chemical Family: Polyurethane
MSDS Number: 4016
Product Code: 0431543

2. Composition/Information On Ingredients

Ingredient Name	CAS Number		Percent Of Total Weight
POLYISOCYANATE PREPOLYMER	Trade Secret		
XYLENE (MIXED ISOMERS)	1330-20-7	<	4

3. Hazards Identification

Eye Hazards
Causes eye irritation.

Skin Hazards
May cause skin irritation. Prolonged and/or repeated skin contact may cause an allergic reaction/sensitization.

Ingestion Hazards
May be harmful if swallowed.

Inhalation Hazards
May cause nose, throat, and lung irritation. May cause an allergic respiratory reaction / sensitization after prolonged or repeated contact. Reports have associated repeated and prolonged exposure to some of the

3. Hazards Identification - Continued

Inhalation Hazards - Continued

chemicals in this product with permanent brain, liver, kidney, and Central Nervous System damage. Headaches and dizziness may result.

4. First Aid Measures

Eye

In case of contact, hold eyelids apart and immediately flush eyes with plenty of tepid water for at least 15 minutes. Get medical attention immediately if irritation develops and persists.

Skin

In case of contact, immediately flush skin with soap and plenty of tepid water for at least 15 minutes. Get medical attention immediately if irritation (redness, rash, blistering) develops and persists.

Ingestion

If victim is fully conscious do not induce vomiting, give one or two cups of water or milk to drink. Call a physician or a poison control center immediately.

Inhalation

Remove to fresh air. If not breathing, give artificial respiration, seek medical attention.

5. Fire Fighting Measures

Flash Point: N/A °F
Flash Point Method: Solid per ASTM D4359
Autoignition Point: N/AV °F
Lower Explosive Limit: N/AV
Upper Explosive Limit: N/AV

Fire And Explosion Hazards

During a fire, irritating and/or toxic gases and aerosols from the decomposition/combustion products may be present.

Extinguishing Media

In case of fire, use water spray (fog) foam, dry chemical, or CO2.

Fire Fighting Instructions

In the event of a fire, firefighters should wear full protective clothing and NIOSH-approved self-contained breathing apparatus with a full facepiece operated in the pressure demand or other positive pressure mode.

6. Accidental Release Measures

Avoid release to the environment. Use appropriate Personal Protective Equipment (PPE). Contain spill and collect with absorbent material and transfer into suitable containers. Do not flush to sewer or allow to enter waterways. Ventilate enclosed area.

7. Handling And Storage

Handling And Storage Precautions

Keep out of reach of children. Store in a cool, dry, well ventilated area. Keep containers tightly closed.

Handling Precautions

Do not smoke. Use only in well ventilated areas. Condition to 65-85F before using. Use only with ventilation sufficient to reduce potential exposures (air borne levels of dust, fumes, vapors, etc.) to below recommended exposure limits.

Storage Precautions

Do not store near excessive heat. Store in tightly closed containers and protect from moisture and foreign

7. Handling And Storage - Continued

Storage Precautions - Continued

material. Ideal storage temperature is less than 75F. If maximum storage temperature is exceeded, material may prematurely polymerize without hazard.

Work/Hygienic Practices

Wash thoroughly with soap and water after handling.

8. Exposure Controls/Personal Protection

Engineering Controls

Use of a system of local and/or general exhaust is recommended to keep employee below applicable exposure limits. Refer to the current edition of "Industrial Ventilation: A Manual of Recommended Practice" published by the American Conference of Governmental Industrial Hygienists for information on the design, installation, use, and maintenance of exhaust systems.

Eye/Face Protection

Safety glasses with side shields or goggles.

Skin Protection

Chemical-resistant gloves. Lab coat or other work clothing to prevent skin exposure (Long sleeve shirt and long pants). Launder before reuse.

Respiratory Protection

A respirator protection program that meets 29 CFR 1910.134 requirement must be followed whenever workplace conditions warrant a respirator's use. In areas where the Permissible Exposure Limits are exceeded, use a properly fitted NIOSH-approved respirator.

Other/General Protection

Wash thoroughly after handling.

Ingredient(s) - Exposure Limits

XYLENE (MIXED ISOMERS)
- ACGIH TLV-STEL 150 ppm
- ACGIH TLV-TWA 100 ppm
- OSHA PEL-TWA 100 ppm

9. Physical And Chemical Properties

Appearance

Paste (solid) in various colors

Odor

Aromatic odor

Chemical Type: Mixture
Physical State: Solid
Melting Point: N/AV °F
Boiling Point: N/AV °F
Specific Gravity: 1.4 grams/cm3
Percent VOCs: < 4%
Packing Density: 11.5 - 12.0 pounds /gallon
Vapor Pressure: N/AV
Vapor Density: > Air
Solubility: N/AV
Evaporation Rate: Slower than ether
VOC Content: < 40 grams / liter (EPA Method 24)

MATERIAL SAFETY DATA SHEET

Sikaflex® 1A (All Colors)

10. Stability And Reactivity

Stability: Stable
Hazardous Polymerization: Will not occur

Conditions To Avoid (Stability)
Open flame

Incompatible Materials
Water, Alcohol, Amines

Hazardous Decomposition Products
Carbon Dioxide, Carbon Monoxide, and Oxides of Nitrogen, Smoke, Fumes

Conditions To Avoid (Polymerization)
None known

11. Toxicological Information

Conditions Aggravated By Exposure
Eye disease, skin disorders and allergies, chronic respiratory conditions.

12. Ecological Information

No Data Available...

13. Disposal Considerations

Dispose in accordance with applicable federal, state and local government regulations. Waste generators must determine whether a discarded material is classified as a hazardous waste. USEPA guidelines for the classification determination are listed in 40 CFR Parts 261.3. Additionally, waste generators must consult state and local hazardous waste regulations to ensure complete and accurate classification.

14. Transport Information

Proper Shipping Name
Not regulated by the USDOT.

15. Regulatory Information

U.S. Regulatory Information
All ingredients of this product are listed or are excluded from listing under the U.S. Toxic Substances Control Act (TSCA) Chemical Substance Inventory.

SARA Hazard Classes
Acute Health Hazard
Chronic Health Hazard

SARA Title III - Section 313 Supplier Notification
This product contains the following toxic chemicals that are subject to the reporting requirements of section 313 of the Emergency Planning and Community Right-To-Know Act (EPCRA) of 1986 and of 40 CFR 372.

XYLENE (MIXED ISOMERS) (1330-20-7) <4 %

This information must be included on all MSDSs that are copied and distributed for this material.

Ingredient(s) - U.S. Regulatory Information
XYLENE (MIXED ISOMERS)
SARA Title III - Section 313 Form "R"/TRI Reportable Chemical
SARA - Acute Health Hazard
SARA - Chronic Health Hazard

15. Regulatory Information - Continued

Ingredient(s) - U.S. Regulatory Information - Continued

SARA - Fire Hazard

Ingredient(s) - State Regulations

XYLENE (MIXED ISOMERS)

New Jersey - Workplace Hazard
New Jersey - Environmental Hazard
New Jersey - Special Hazard
Pennsylvania - Workplace Hazard
Pennsylvania - Environmental Hazard
Massachusetts - Hazardous Substance
New York City - Hazardous Substance

16. Other Information

HMIS Rating

Health: *2
Fire: 1
Reactivity: 0
PPE: C

Revision/Preparer Information

MSDS Preparer: EHS Department
MSDS Preparer Phone Number: 201 933 8800
This MSDS Supercedes A Previous MSDS Dated: 12/11/2006

Disclaimer

The information contained in this Material Safety Data Sheet applies only to the actual Sika Corporation ("Sika") product identified and described herein. This information is not intended to address, nor does it address the use or application of the identified Sika product in combination with any other material, product or process. All of the information set forth herein is based on technical data regarding the identified product that Sika believes to be reliable as of the date hereof. Prior to each use of any Sika product, the user must always read and follow the warnings and instructions on the product's current Technical Data Sheet, product label and Material Safety Data Sheet for each Sika product, which are available at web site and/or telephone number listed in Section 1 of this MSDS.

SIKA MAKES NO WARRANTIES EXPRESS OR IMPLIED AND ASSUMES NO LIABILITY ARISING FROM THIS INFORMATION OR ITS USE. SIKA SHALL NOT BE LIABLE UNDER ANY LEGAL THEORY FOR SPECIAL OR CONSEQUENTIAL DAMAGES AND SHALL NOT BE RESPONSIBLE FOR THE USE OF THIS PRODUCT IN A MANNER TO INFRINGE ON ANY PATENT OR ANY OTHER INTELLECTUAL PROPERTY RIGHTS HELD BY OTHERS.

All sales of Sika products are subject to its current terms and conditions of sale available at www.sikacorp.com or 201-933-8800.

Sika Corporation

Printed Using MSDS Generator™ 2000

15. Regulatory Information - Continued

Ingredient(s) - U.S. Regulatory Information - Continued

SARA - Fire Hazard

Ingredient(s) - State Regulations

XYLENE (MIXED ISOMERS)

New Jersey - Workplace Hazard
New Jersey - Environmental Hazard
New Jersey - Special Hazard
Pennsylvania - Workplace Hazard
Pennsylvania - Environmental Hazard
Massachusetts - Hazardous Substance
New York City - Hazardous Substance

16. Other Information

HMIS Rating

Health: *2
Fire: 1
Reactivity: 0
PPE: C

Revision/Preparer Information

MSDS Preparer: EHS Department
MSDS Preparer Phone Number: 201 933 8800
This MSDS Supercedes A Previous MSDS Dated: 12/11/2006

Disclaimer

The information contained in this Material Safety Data Sheet applies only to the actual Sika Corporation ("Sika") product identified and described herein. This information is not intended to address, nor does it address the use or application of the identified Sika product in combination with any other material, product or process. All of the information set forth herein is based on technical data regarding the identified product that Sika believes to be reliable as of the date hereof. Prior to each use of any Sika product, the user must always read and follow the warnings and instructions on the product's current Technical Data Sheet, product label and Material Safety Data Sheet for each Sika product, which are available at web site and/or telephone number listed in Section 1 of this MSDS.

SIKA MAKES NO WARRANTIES EXPRESS OR IMPLIED AND ASSUMES NO LIABILITY ARISING FROM THIS INFORMATION OR ITS USE. SIKA SHALL NOT BE LIABLE UNDER ANY LEGAL THEORY FOR SPECIAL OR CONSEQUENTIAL DAMAGES AND SHALL NOT BE RESPONSIBLE FOR THE USE OF THIS PRODUCT IN A MANNER TO INFRINGE ON ANY PATENT OR ANY OTHER INTELLECTUAL PROPERTY RIGHTS HELD BY OTHERS.

All sales of Sika products are subject to its current terms and conditions of sale available at www.sikacorp.com or 201-933-8800.

Sika Corporation

Printed Using MSDS Generator™ 2000

VRH Construction Corp.

625 Eighth Avenue
2nd Flr, North Building
New York, NY 10018

Phone: 212-629-6187
Fax: 212-629-9243

SUBMITTAL NO. 07115-001
PACKAGE NO: 07115

TITLE: Bituthene 5000
PROJECT: PANY/NJ-bt-200.200 WO 12

DRAWING:
STATUS: 3
BIC: PANYNJ

REQUIRED START: 5/26/2009
REQUIRED FINISH: 6/9/2009

DAYS HELD: 0
DAYS ELAPSED: 0
DAYS OVERDUE: -14

RECEIVED FROM		SENT TO		RETURNED BY		FORWARDED TO	
TG	JB	PANYNJ	KC	PANYNJ	KC	TG	JB

Revision No.	Description / Remarks	Received	Sent	Returned	Forwarded	Status	Sepias	Prints	Drawing Date	Held	Elapsed
000	Bituthene 5000	5/26/2009	5/26/2009			3	0	8		0	0

web www.graceconstruction.com
■UPDATES ■TECH LETTERS ■DETAILS ■MSDS ■CONTACT ■FAQS

Bituthene® 5000

07115-001
200.200 W.O. 12

Durable, self-adhesive waterproofing membrane engineered to accept hot asphaltic overlays

Advantages

- Self adhesive – no heating plant or hot bedding adhesive required; self sealing overlaps provide continuity
- Flexible – easily applied, conforms to changes in profile
- Robust – accepts paving machinery
- Pre-formed – guaranteed thickness; not subject to site variation
- Mesh reinforced – provides dimensional stability and resistance to damage
- Homogenous waterproofing layer – asphaltic concrete flows into mesh when compacted
- Fully-adhered – prevents water migration under waterproofing layer

Description

Bituthene® 5000 Waterproofing Membrane is a factory-made composite product with a nominal thickness of 1.7 mm (0.065 in). It is composed of 1.4 mm (0.056 in.) of rubberized asphalt and a layer of heat-resistant, woven polypropylene mesh.

Bituthene 5000 Waterproofing Membrane is supplied in rolls. The rubberized asphalt is covered with a release sheet which is removed during installation. The membrane is self-adhesive and cold applied. No special adhesives or equipment are required to form laps.

Use

Bituthene 5000 Waterproofing Membrane is ideal for waterproofing concrete surfaces on which hot asphaltic concrete overlays are installed, such as on parking decks and bridges where in-service temperatures will not exceed 54°C (130°F).

Note: For concrete wearing courses use Bituthene 3000, Bituthene Low Temperature or Bituthene System 4000 Waterproofing Membranes.

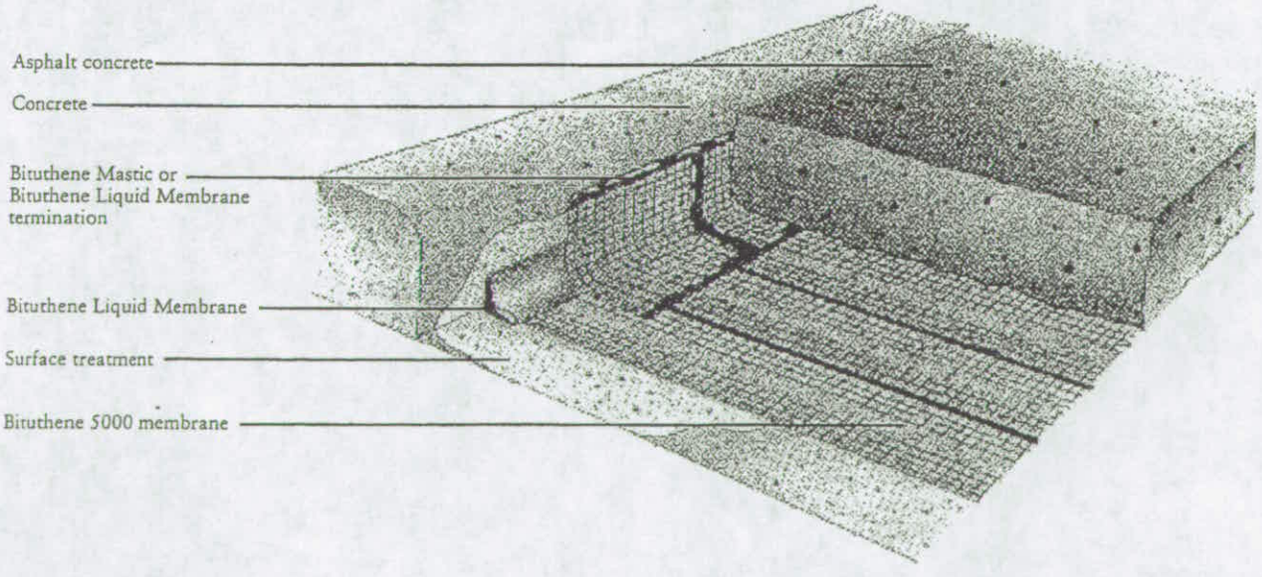

GRACE
Construction Products

Application Procedures

Safety, Storage and Handling Information

Bituthene products must be handled properly. Vapors from solvent-based primers and mastic are harmful and flammable. For these products, the best available information on safe handling, storage, personal protection, health and environmental considerations has been gathered. Material Safety Data Sheets (MSDS) are available at www.graceconstruction.com and users should acquaint themselves with this information. Carefully read detailed precaution statements on product labels and the MSDS before use.

Surface Preparation

Concrete must be structurally sound with a smooth, uniform surface. Surfaces shall be free of voids, spalled areas, loose aggregated and sharp protrusions with no coarse aggregate visible. New broom finishes are not recommended. Thoroughly clean all surfaces of old waterproofing, oil, grease or other contaminants. Surfaces defects should be corrected as directed by the project engineer. New concrete should be cured and dry for a minimum of 7 days. The membrane can be installed over new concrete in less than 7 days when using Bituthene Primer B2. Dry time of new or patching concrete will vary with weather conditions and mix design. Consult the project engineer for cure and dry times. Forms must be removed to allow proper drying of concrete. Concrete surfaces must be clean and dry prior to installation of the Bituthene 5000 Waterproofing Membrane.

New concrete may be cured with a clear, resin-based curing compound. Bituthene 5000 is not compatible with concrete treatments that contain oil, wax, silicone or pigment.

Surface Treatment

Treat all concrete surfaces to receive Bituthene 5000 Waterproofing Membrane either with Bituthene Primer B2, Bituthene Primer WP-3000 or Bituthene Deck Prep® Surface Treatment prior to the installation of the membrane. Do not apply primer to Bituthene membrane.

Bituthene Primer B2

Apply Bituthene Primer B2 at a rate of 6 m²/L (250 ft²/gal). Primer can be applied with a lambs wool roller. Primer should dry one hour or until tack free. Primer will dry to a dark gray color. Prime only the area which will be covered with membrane in a working day. Areas not covered within 24 hours should be reprimed. Metal does not require priming but must be clean, dry and free of grease, oil, dirt, loose paint, rust or other contaminants. Fresh asphaltic concrete or thoroughly dry asphalt slurry seals do not require priming. Old, oxidized or dusty asphalt surfaces should be primed at a rate of 7.4-10.0 m²/L (300-400 ft²/gal).

Bituthene Primer WP-3000

Apply Bituthene Primer WP-3000 by roller or spray to a clean, dry, frost-free surfaces at a rate of 12-15 m²/L (500-600 ft²/gal). Coverage should be uniform.

Allow Bituthene Primer WP-3000 to dry one hour or until concrete returns to its original color. At low temperatures or in high humidity, dry time may be longer. WP-3000 is clear when dry and may be slightly tacky. Priming should be limited to an area that can be covered with membrane within 24 hours.

Bituthene Deck Prep

Bituthene Deck Prep Surface Treatment is ideally suited as a leveling course and preparation treatment for rough, irregular concrete decks. Bituthene primers are not necessary when using Bituthene Deck Prep.

All surfaces must be dry and free of dirt, grease oil dust or other contaminants. Bituthene Deck Prep should be applied when ambient and concrete temperatures are above -4°C (25°F).

Cold temperatures will extend cure times. For application in ambient and concrete temperatures below 4°C (40°F), store containers in a warm area until use.

To prepare Bituthene Deck Prep, add contents of Part B container and Part A and mix for at least 5 minutes, or until uniform. Take care to assure thorough mixing. Poorly mixed material will not cure properly. Bituthene Deck Prep Surface Treatment may be mixed by hand, however, low speed (150 rpm) mechanical mixer with flat paddle blades is preferable and will ease mixing.

Once mixed, Bituthene Deck Prep must be spread by squeegee within 1.5 hours. Maximum time for application is longer at low temperatures. At higher temperatures thickening and curing will occur in less than 90 minutes. Material that has cured must be discarded in accordance with federal, state and local regulations. Bituthene Deck Prep will cure to a tough, flexible rubber. Membrane installation can begin as soon as the surface treatment has cured.

Drainage and Joints

The deck should be pitched towards gutters and drains. Weep holes or drainage openings should be provided at the structural deck level to drain water which permeates through the asphaltic concrete.

A 200 mm (8 in.) reinforcing strip of Bituthene 5000 must be applied over non-working joints or cracks over 3 mm (0.125 in.) wide before applying the full coverage of

membrane. Terminate Bituthene 5000 at expansion joints and seal terminations with Bituthene Mastic. At steel expansion dams, terminate membrane on the concrete deck and apply Bituthene Mastic at the termination to assure a tight seal. Steel finger joints or other expansion joint assemblies should be placed to the level of the concrete.

Placement of Membrane

Apply Bituthene 5000 so that side laps are in the direction of paving and shed water. End laps should be staggered. Membrane shall be overlapped a minimum of 50 mm (2 in.) along the lateral side and 150 mm (6 in.) on end laps. If the installation can not be completed in a single working day, seal the perimeter of the membrane with Bituthene Mastic.

Application of the membrane shall begin and end on the horizontal surface. Vertical terminations along curb lines, expansion dams or any other protrusion shall receive a trowel of Bituthene Mastic. Mastic should cover the edge of the membrane and extend no higher than the planned level of the wearing surface.

Inspection and Repair

Care should be exercised to prevent damage to membrane. Any areas which are damaged must be cleaned and patched to the satisfaction of the project engineer.

Repair blisters by puncturing and forcing out trapped air. Small punctures will self-seal. Tears or any other damage should be treated by placing a patch of membrane over the damaged area. Patch should extend in all directions a minimum of 100 mm (4 in.) from damaged area. If blisters develop during paving, relieve pressure by puncturing blister at the end of the blister.

Asphaltic Concrete Application

The asphaltic concrete pavement shall be placed as soon as possible after the installation of the Bituthene 5000 Waterproofing Membrane to reduce the risk of damage to the membrane. The thickness of the overlay is recommended for most light traffic areas. Thicker overlays are recommended for heavy traffic areas or areas with severe environmental exposure.

The asphaltic concrete temperature in the paving machine hopper must be between 135°C (275°F) and 150°C (300°F). It should be noted that the temperature of the initial loads in the hopper may lose up to 5°C (40°F) en route to the deck due to thermal transfer to cold machinery. In all cases, initial compaction of the overlay should occur at a minimum asphaltic concrete temperature of 135°C (275°F) at the deck. Failure to compact the overlay at 135°C (275°F) or higher may result in premature deterioration of the asphaltic concrete overlay. Do not use any protection course between Bituthene 5000 and the asphaltic concrete overlay. Following rain, paving must be delayed until the membrane surface is dry.

While flat tracked paving equipment is preferred, either flat tracked or pneumatic tire equipment may be used. Equipment should be inspected prior to use for burrs, stones or sharp projections on tracks which could damage the membrane.

Asphaltic concrete should not be dumped in windrows on the membrane but should be delivered directly from the truck to the paver hopper. Pavers should avoid stopping with a full hopper or build up asphaltic concrete in auger. Paver screeds should be preheated to facilitate the movement of the asphaltic concrete but burners should be turned off prior to paving as flames may damage the membrane. The level of asphaltic concrete in the auger should be kept just below the level of the auger shaft.

Asphaltic Concrete Compaction

Compaction is the single most important factor affecting the ultimate performance of a hot mix asphalt pavement. There are four factors which interact and impact the proper compaction of an asphaltic concrete pavement: mix design, environmental variables, site conditions and equipment.

Mix Design

The asphaltic concrete mix must be designed to withstand the stresses on the asphaltic concrete pavement that are anticipated during service. Factors which can impact the performance of the asphaltic concrete pavement include volume and weight of traffic, exposure to salt water or deicing chemicals, thermal cycles and road grade.

A continuously graded aggregate from coarse to fine is typically easier to compact than a mixture with any other aggregate gradation. The asphaltic content of the mix influences compactability. Asphalt content will typically range between 5% and 10% of the mix weight. In general, a mix with too little asphalt tends to be stiff and will require increased compaction whereas a mix with too much asphalt will tend to shove. A mix that is placed at a higher temperature will be easier to compact than a mix that is lower in temperature.

Sand mixes tend to be softer and easier to compact but more easily affected by in service stresses than aggregated mixes.

Environmental Factors

Mat thickness, air temperature, substrate temperature, mix temperature, wind and solar flux have an

Bituthene 5000	0.9 m x 20 m roll (18.6 m²) 3 ft x 66.7 ft (ft²)
Weight	37 kg (82 lbs)
Packaging	25 rolls per pallet
Storage	Store upright in dry conditions below 135°C (95°F)

Ancillary Products (See separate data sheets.)

Bituthene WP-3000	18.9 L (5 gal) pail/24 pails per pallet
Bituthene Primer B2	18.9 L (5 gal) pail/48 pails per pallet
Bituthene Liquid Membrane	5.7 L (1.5 gal) pail
Bituthene Deck Prep	15.1 L (4 gal) pail/24 pails per pallet
Bituthene Mastic	18.9 L (5 gal) pail/36 pails per pallet
	0.9 L (30 oz) tube/12 tubes per carton

Physical Properties for Bituthene 5000 Waterproofing Membrane

Property	Test Method	Typical Value
Thickness	ASTM D 3767	1.7 mm (0.065 in.) nomial
Tensile Strength	ASTM D 882	13 kN/m (75 lbs/in.) 7928 kPa (1,150 lbs/in²)
Elongation	ASTM D 882	50% minimum
Puncture Resistance, Mesh	ASTM E 154	890 N (200 lbs)
Flexibility, 180° bend over 6 mm (0,25 in.) mandrel at -4°C (25°F)	ASTM D 1970	Unaffected
Crack Cycling at -4°C (25°F), 100 Cycles	ASTM C 836	Unaffected
Permeance	ASTM E 96	58 ng/m²sPa (1.0 perms)
Peel Adhesion	ASTM D 903	880 N/m (5 lbs/in.)

affect on the rate of cooling. The minimum recommended temperature at compaction of asphaltic concrete over Bituthene 5000 is 135°C (275°F). Temperatures lower than this may make compaction difficult and jeopardize proper formationof the mat.

Mat thickness is the single most important factor influencing the rate at which the mix cools. It is very difficult to properly compact thin in cool weather because of the rapid loss of heat from the mat. When this occurs, the mats are susceptible to premature failure due to the inability to properly densify the mix before it cools below the minimum compaction temperature. Asphaltic concrete should be placed at thickness greater than 50 mm (2 in.) during cool temperatures.

Air and substrate temperatures have a significant impact on the rate of cooling of the asphaltic concrete mix. Typically, more heat flows from the asphaltic concrete mat into the concrete base than up into the air. Therefore, substrate (concrete deck) temperature has more impact on the time available to compact the mat than air temperature.

Wind has a greater impact on the surface of the mat than on the internal temperature of the mix and can cause the surface to cool so rapidly that a crust will form. Surface crust must be broken by the rollers before the actual compaction process can begin.

The best installation practice to minimize potential compaction problems is to increase the thickness of the mat. Thin mats cool so quickly even under optimum environmental and site conditions, that proper compaction is very difficult. To be certain of proper compaction, and for installation during the spring and fall the minimum mat thickness after compaction should be 50 mm (2 in.).

For Technical Assistance call us toll free at 866-333-3SBM (3726).

web Visit our web site at www.graceconstruction.com

printed on recycled paper

W. R. Grace & Co. - Conn. 62 Whittemore Avenue Cambridge, MA 02140

Bituthene and Bituthene Deck Prep are registered trademarks of W. R. Grace & Co. - Conn.

We hope the information here will be helpful. It is based on data and knowledge considered to be true and accurate and is offered for the users' consideration, investigation and verification, but we do not warrant the results to be obtained. Please read all statements, recommendations or suggestions in conjunction with our conditions of sale, which apply to all goods supplied by us. No statement, recommendation or suggestion is intended for any use which would infringe any patent or copyright. W. R. Grace & Co. - Conn., 62 Whittemore Avenue, Cambridge, MA 02140. In Canada, Grace Canada, Inc., 294 Clements Road, West, Ajax, Ontario, Canada L1S 3C6.

These products may be covered by patents or patents pending. Copyright 2002. W. R. Grace & Co. - Conn. BIT-275A Printed in USA 12/02 EPDM_I/2.M

GRACE Construction Products

SECTION 1 - CHEMICAL PRODUCT AND COMPANY IDENTIFICATION

Product Name:	Bituthene Primer B2
MSDS Number:	M-85740
Cancelled MSDS Number:	M-85690
MSDS Date:	12/7/04
Chemical Family Name:	Synthetic Rubber Solution in Organic Solvent.
Product Use:	Horizontal and Vertical Grade Primer
Chemical Formula:	Mixture-NA
CAS # (Chemical Abstracts Service Number):	Mixture-NA

Manufactured by:

W.R.Grace & Co.-Conn.
62 Whittemore Avenue
Cambridge, MA 02140

Grace Canada, Inc.
294 Clements Road West
Ajax, Ontario L1S 3C6

In Case of Emergency Call:

In USA: (617) 876-1400 In Canada: (905) 683-8561

SECTION 2 - COMPOSITION/INFORMATION ON INGREDIENTS

Ingredient	CAS#	Percent (max)
Aromatic Hydrocarbon Resin	Prop00010	50-100
Ethyl benzene	000100-41-4	10-25
Toluene	000108-88-3	1-10
Xylenes (o-, m-, p- isomers)	001330-20-7	25-50

SECTION 3 - HAZARDS IDENTIFICATION

Emergency Overview:

Warning!
Flammable liquid.
Vapors may ignite explosively.
Vapors are heavier than air and may travel to distant sources of ignition-and flash back.
May be harmful if inhaled.
Inhalation of high vapor concentrations can cause CNS depression, unconciousness or death.
Causes severe respiratory tract irritation.
May cause kidney, lung and liver tumors.
Causes eye burns.
May be harmful if absorbed through skin.
Causes skin burns.
May be harmful if ingested.
Causes digestive tract irritation if ingested.
May produce cardiac sensitivity and developmental toxic effects.
May cause damage to brain, liver and kidneys.

HMIS Rating:

Health:	3*
Flammability:	3
Reactivity:	0
Personal Protective Equipment:	B,G (See Section 8)

SECTION 1 - CHEMICAL PRODUCT AND COMPANY IDENTIFICATION

Product Name:	Bituthene Primer B2
MSDS Number:	M-85740
Cancelled MSDS Number:	M-85690
MSDS Date:	12/7/04
Chemical Family Name:	Synthetic Rubber Solution in Organic Solvent.
Product Use:	Horizontal and Vertical Grade Primer
Chemical Formula:	Mixture-NA
CAS # (Chemical Abstracts Service Number):	Mixture-NA

Manufactured by:

W.R.Grace & Co.-Conn.	Grace Canada, Inc.
62 Whittemore Avenue	294 Clements Road West
Cambridge, MA 02140	Ajax, Ontario L1S 3C6

In Case of Emergency Call:

In USA: (617) 876-1400 In Canada: (905) 683-8561

SECTION 2 - COMPOSITION/INFORMATION ON INGREDIENTS

Ingredient	CAS#	Percent (max)
Aromatic Hydrocarbon Resin	Prop00010	50-100
Ethyl benzene	000100-41-4	10-25
Toluene	000108-88-3	1-10
Xylenes (o-, m-, p- isomers)	001330-20-7	25-50

SECTION 3 - HAZARDS IDENTIFICATION

Emergency Overview:

Warning!
Flammable liquid.
Vapors may ignite explosively.
Vapors are heavier than air and may travel to distant sources of ignition and flash back.
May be harmful if inhaled.
Inhalation of high vapor concentrations can cause CNS depression, unconciousness or death.
Causes severe respiratory tract irritation.
May cause kidney, lung and liver tumors.
Causes eye burns.
May be harmful if absorbed through skin.
Causes skin burns.
May be harmful if ingested.
Causes digestive tract irritation if ingested.
May produce cardiac sensitivity and developmental toxic effects.
May cause damage to brain, liver and kidneys.

HMIS Rating:

Health:	3*
Flammability:	3
Reactivity:	0
Personal Protective Equipment:	B,G (See Section 8)

SECTION 1 - CHEMICAL PRODUCT AND COMPANY IDENTIFICATION

Product Name:	Bituthene Primer B2
MSDS Number:	M-85740
Cancelled MSDS Number:	M-85690
MSDS Date:	12/7/04
Chemical Family Name:	Synthetic Rubber Solution in Organic Solvent.
Product Use:	Horizontal and Vertical Grade Primer
Chemical Formula:	Mixture-NA
CAS # (Chemical Abstracts Service Number):	Mixture-NA

Manufactured by:

W.R.Grace & Co.-Conn.
62 Whittemore Avenue
Cambridge, MA 02140

Grace Canada, Inc.
294 Clements Road West
Ajax, Ontario L1S 3C6

In Case of Emergency Call:

In USA: (617) 876-1400 In Canada: (905) 683-8561

SECTION 2 - COMPOSITION/INFORMATION ON INGREDIENTS

Ingredient	CAS#	Percent (max)
Aromatic Hydrocarbon Resin	Prop00010	50-100
Ethyl benzene	000100-41-4	10-25
Toluene	000108-88-3	1-10
Xylenes (o-, m-, p- isomers)	001330-20-7	25-50

SECTION 3 - HAZARDS IDENTIFICATION

Emergency Overview:

Warning!
Flammable liquid.
Vapors may ignite explosively.
Vapors are heavier than air and may travel to distant sources of ignition-and flash back.
May be harmful if inhaled.
Inhalation of high vapor concentrations can cause CNS depression, unconciousness or death.
Causes severe respiratory tract irritation.
May cause kidney, lung and liver tumors.
Causes eye burns.
May be harmful if absorbed through skin.
Causes skin burns.
May be harmful if ingested.
Causes digestive tract irritation if ingested.
May produce cardiac sensitivity and developmental toxic effects.
May cause damage to brain, liver and kidneys.

HMIS Rating:

Health:	3*
Flammability:	3
Reactivity:	0
Personal Protective Equipment:	B,G (See Section 8)

Potential Health Effects:

Inhalation:
Causes severe respiratory tract irritation.
Effects include: Drowsiness, nausea, CNS depression, vomiting, coma, headache, dizziness, loss of consciousness, death, coughing, anemia, narcotic effects, irritation.
Ehtyl benzene contained in this product has been shown to produce kidney, lung and liver tumors based on animal inhalation studies. Xylene contained in this product has been shown to affect the liver, kidney, lungs, spleen, heart and adrenals based on high exposure animal studies. Toluene has been shown to produce cardiac effects in laboratory animal studies. These studies show that inhalation of high levels produce cardiac sensitization which may cause fatal changes in heart rhythms. Toluene vapors have been linked to brain, liver, and kidney damage and to death.

Eye Contact:
Eye contact causes burns.
Prolonged eye contact can result in tissue damage.

Skin Contact:
Skin contact causes irritation.
Prolonged skin contact can result in irritation causing redness and itching.
May defat skin.
May cause dermatitis.

Skin Absorption:
Harmful if absorbed through the skin.
May cause effects similar to those defined under inhalation.

Ingestion:
Harmful if ingested.
If ingested, causes irritation to the linings of the mouth, esophagus and stomach.
Effects include: Drowsiness, nausea, fatigue, pulmonary edema (from aspiration into the lungs from vomiting), CNS depression, vomiting, diarrhea, headache, dizziness, loss of consciousness, death, anemia and narcotic effects.
Toluene has been shown to produce developmental toxic effects in humans and in animal studies.

SECTION 4 - FIRST AID MEASURES:

Skin Contact:
In case of skin contact, clean fingernails and wash skin with soap and water. If residue remains, clean with waterless handcream or abrasive soap. Never use solvents.
Call a physician.
Remove contaminated clothing and wash before reuse.

Eye Contact:
Flush eyes with water for at least 15 minutes while holding eyelids open.
Get immediate medical attention.

Ingestion:
Do not induce vomiting.
Never give anything by mouth to an unconscious person.
If discomfort or irritation persists, consult a physician.

Inhalation:
If symptoms develop, get fresh air. If symptoms persist, consult a physician.
If breathing has stopped, give artificial respiration then oxygen if needed.

SECTION 5 - FIRE AND EXPLOSION HAZARD DATA

Flash Point:	~80°F/27°C
Flash Point Method:	Tag Closed Cup (Xylene)
Lower Explosion Limit:	Not Available
Upper Explosion Limit:	Not Available

Auto-Ignition Temperature: Not Available

NFPA Rating:

Health:	2
Flammability:	3
Reactivity:	0

Extinguishing Media: In case of fire, use water spray, dry chemical, Carbon dioxide or foam.
Special Fire Fighting Procedures:
Firefighters should be equipped with Self-contained Breathing Apparatus (SCBA) to prevent inhalation of hazardous decomposition products. (See Section 10.)
Water spray may be ineffective when extinguishing fire. Water may be used to cool closed containers. Do not scatter spilled material with high pressure water stream. Fog nozzles are preferred if water is used.
Unusual Fire and Explosion Hazards:
Keep away from heat, electrical equipment, sparks, and open flame. Extinguish all sources of ignition. Vapors are heavier than air and may travel along ground to ignition sources such as electrical equipment, smoking materials, welding equipment, and pilot lights. Product can ignite explosively. Closed containers may explode when exposed to extreme heat. Flammable liquid. Keep containers closed except when in use.

SECTION 6 - ACCIDENTAL RELEASE MEASURES:

Spills/Leaks:
Use proper personal protective equipment. Do not flush to sewer or allow to enter waterways. Keep unnecessary people away. Absorb spilled product with an inert non combustible material and remove for disposal. Do not use metal shovels or other tools which could create sparks.

SECTION 7 - HANDLING AND STORAGE

Precautionary Measures:
Avoid contact with eyes, skin and clothing.
Use only with adequate ventilation.
Forced ventilation is necessary in pits and other confined areas.
Respiratory protection is required.
Forced ventilation is necessary in pits and other confined or poorly ventilated areas.
Do not take internally.
Practice good personal hygiene to avoid ingestion.
Wash clothing before reuse.
To avoid skin contact, use gloves or barrier creams. Promptly cleanse hands with waterless hand cleaner, clean fingernails and wash with soap and water after handling.
When working around heating and air conditioning systems, block intake vents to prevent vapor from traveling into buildings. Keep away from heat, sparks and flame. Enforce no smoking policy for all trades present on job site. Keep container closed tightly when not in use to avoid unnecessary release of vapors and to prevent spills. Do not reuse empty containers.
Bond and ground containers when transferring product.
FOR PROFESSIONAL USE ONLY. KEEP OUT OF CHILDREN'S REACH.

SECTION 8 - EXPOSURE CONTROLS AND PERSONAL PROTECTIVE EQUIPMENT

EXPOSURE GUIDELINES (US)

Ingredient	ACGIH TLV			OSHA PEL			Other
	TWA	STEL	Ceiling	TWA	STEL	Ceiling	
Aromatic Hydrocarbon Resin	-	-	-	-	-	-	-
Ethyl benzene	100 ppm TWA	125 ppm STEL	-	100 ppm TWA; 435 mg/m3 TWA	125 ppm STEL; 545 mg/m3 STEL	-	-
Toluene	50 ppm TWA	-	-	100 ppm TWA; 375 mg/m3 TWA	150 ppm STEL; 560 mg/m3 STEL	-	-
Xylenes (o-, m-, p- isomers)	100 ppm	150 ppm	-	100 ppm TWA; 435	150 ppm STEL;	-	-

	TWA	STEL		mg/m3 TWA	655 mg/m3 STEL		

EXPOSURE GUIDELINES (CANADA)

Employers should consult local Provincial regulatory limits for exposure guidelines which may vary locally.

Engineering Controls: Explosion-proof portable ventilation is required to prevent vapor build-up during application in enclosed or depressed areas. Vapors are heavier than air and will build-up in confined spaces without ventilation. Vapor build-up can be life threatening. Portable equipment such as a Coppus Vano portable blower/exhauster should be used in accordance with the manufacturer's instructions.

Personal Protective Equipment:

Respiratory Protection: A chemical cartridge respirator with organic vapor cartridge is required. A dust/mist cartridge or prefilter may be needed in addition to control exposure to mist. Supplied air respirator (SCBA) is required at exposure levels above the capabilities of a chemical cartridge respirator.

Skin Protection: PVA supported polyvinyl alcohol, nitrile or viton gloves are recommended. Natural rubber or butyl rubber gloves should not be worn.

Eye Protection: At minimum, safety glasses with side shields should be worn where exposure to excessive dust or spray is likely. Wear goggles to prevent exposure to high vapor concentrations.

Work/Hygienic Practices: Use good personal hygiene practices.

You and your personnel must completely understand the fire and explosion hazards before using flammable liquid based products. To avoid skin contact, wear recommended gloves (see skin protection recommendation) and wash with soap and water after handling. Promptly cleanse with waterless hand cleaner, clean fingernails and wash with soap and water after handling. All employees working with this product must exercise good and prudent personal hygiene practices. Avoid rubbing eyes while handling.

SECTION 9 - PHYSICAL AND CHEMICAL PROPERTIES

Physical State:	Liquid
Appearance/Odor:	Smooth black liquid with aromatic solvent odor.
Odor Threshold: (ppm)	Xylene = 1.1 ppm
pH:	Not Available
Vapor Pressure: (Mm Hg)	6-10 (Xylene)
Vapor Density: (Air = 1)	3.7 Xylene
Solubility In Water:	Insoluble
Specific Gravity: (Water = 1)	0.9 (Xylene)
Evaporation Rate: (Butyl Acetate = 1)	0.75 (Xylene)
Boiling Point:	280°F/138°C
Viscosity:	Unknown
Bulk Density: (Pounds/Cubic Foot)(Pcf)	Not Applicable
% Volatiles: (70°F) (21°C)	~80

SECTION 10 - STABILITY AND REACTIVITY

Chemical Stability:	Stable
Conditions To Avoid:	Heat, Sparks, Open flames, Oxidizing materials, Strong acids, rubber and plastics.
Hazardous Polymerization:	Will not polymerize.
Hazardous Decomposition Products:	Carbon dioxide and Carbon monoxide.

SECTION 11 - TOXICOLOGICAL INFORMATION

Ingredient(No data unless listed.)	CAS Number	LD50 and LC50
Ethyl benzene	000100-41-4	Oral LD50 Rat : 3500 mg/kg; Dermal LD50 Rabbit : 17800 uL/kg
Toluene	000108-88-3	Inhalation LC50 Rat : 49 gm/m3/4H; Inhalation LC50 Mouse : 400 ppm/24H;
Xylenes (o-, m-, p- isomers)	001330-20-7	Inhalation LC50 Rat : 5000 ppm/4H; Oral LD50 Rat : 4300 mg/kg;

Carcinogenicity:

Ingredient	IARC Group 1	IARC Group 2A	IARC Group 2B	NTP Known	NTP Suspect	OSHA
Aromatic Hydrocarbon Resin	No	No	No	No	No	No
Ethyl benzene	No	No	Yes	No	No	No
Toluene	No	No	No	No	No	No
Xylenes (o-, m-, p- isomers)	No	No	No	No	No	No

Ethyl benzene contained in this product has been shown to produce kidney, lung and liver tumors based on animal inhalation studies.

Mutagenicity: Ethyl benzene contained in this product has produced mutagenic effects based on animal studies.

Teratogenicity: Not applicable.

Reproductive Toxicity: Not applicable.

SECTION 12 - ECOLOGICAL INFORMATION

Environmental Fate: No data available for product.

Ecotoxicity: No data available for product.

SECTION 13 - DISPOSAL CONSIDERATIONS

Waste Disposal Procedures:

Consult all regulations (federal, state, provincial, local) or a qualified wasted disposal firm when characterizing waste for disposal. Waste/rejected product consisting of unused liquid product in sealed containers is a EPA Hazardous Waste #D001 (due to its ignitability). Dispose of all waste at a disposal facility as permitted by applicable government regulations. Dried waste and waste absorbed in a noncombustible media would not be hazardous if no longer combustible.

Because of the Xylene content (CAS# 1330-20-7) this product is considered a hazardous substance under the U.S. EPA Clean Water Act. Spills of this product must be reported to the national Response Center at 1-800-424-8802. Spill reporting requirements and reportable quantities vary by region.

In case of any spill or release, consult all applicable state and local regulations. Observing all precautions noted above, absorb spilled product with an inert noncombustible material and remove for disposal. Remove all sources of ignition. Do not use metal shovels or other tools which could create sparks.

SECTION 14 - TRANSPORTATION INFORMATION

Proper Shipping Name: Not Applicable

UN/NA Number: 3. UN3295, III

Domestic Hazard Class: Hydrocarbon liquid: NOS (Xylene, Ethyl Benzene)

Surface Freight Classification: Not Applicable

Label/Placard Required: Flammable Liquid

SECTION 11 - TOXICOLOGICAL INFORMATION

Ingredient(No data unless listed.)	CAS Number	LD50 and LC50
Ethyl benzene	000100-41-4	Oral LD50 Rat : 3500 mg/kg; Dermal LD50 Rabbit : 17800 uL/kg
Toluene	000108-88-3	Inhalation LC50 Rat : 49 gm/m3/4H; Inhalation LC50 Mouse : 400 ppm/24H;
Xylenes (o-, m-, p- isomers)	001330-20-7	Inhalation LC50 Rat : 5000 ppm/4H; Oral LD50 Rat : 4300 mg/kg;

Carcinogenicity:

Ingredient	IARC Group 1	IARC Group 2A	IARC Group 2B	NTP Known	NTP Suspect	OSHA
Aromatic Hydrocarbon Resin	No	No	No	No	No	No
Ethyl benzene	No	No	Yes	No	No	No
Toluene	No	No	No	No	No	No
Xylenes (o-, m-, p- isomers)	No	No	No	No	No	No

Ethyl benzene contained in this product has been shown to produce kidney, lung and liver tumors based on animal inhalation studies.

Mutagenicity: Ethyl benzene contained in this product has produced mutagenic effects based on animal studies.
Teratogenicity: Not applicable.
Reproductive Toxicity: Not applicable.

SECTION 12 - ECOLOGICAL INFORMATION

Environmental Fate: No data available for product.
Ecotoxicity: No data available for product.

SECTION 13 - DISPOSAL CONSIDERATIONS

Waste Disposal Procedures:
Consult all regulations (federal, state, provincial, local) or a qualified wasted disposal firm when characterizing waste for disposal. Waste/rejected product consisting of unused liquid product in sealed containers is a EPA Hazardous Waste #D001 (due to its ignitability). Dispose of all waste at a disposal facility as permitted by applicable government regulations. Dried waste and waste absorbed in a noncombustible media would not be hazardous if no longer combustible.
Because of the Xylene content (CAS# 1330-20-7) this product is considered a hazardous substance under the U.S. EPA Clean Water Act. Spills of this product must be reported to the national Response Center at 1-800-424-8802. Spill reporting requirements and reportable quantities vary by region.
In case of any spill or release, consult all applicable state and local regulations. Observing all precautions noted above, absorb spilled product with an inert noncombustible material and remove for disposal. Remove all sources of ignition. Do not use metal shovels or other tools which could create sparks.

SECTION 14 - TRANSPORTATION INFORMATION

Proper Shipping Name: Not Applicable
UN/NA Number: 3. UN3295, III
Domestic Hazard Class: Hydrocarbon liquid: NOS (Xylene, Ethyl Benzene)
Surface Freight Classification: Not Applicable
Label/Placard Required: Flammable Liquid

SECTION 11 - TOXICOLOGICAL INFORMATION

Ingredient(No data unless listed.)	CAS Number	LD50 and LC50
Ethyl benzene	000100-41-4	Oral LD50 Rat : 3500 mg/kg; Dermal LD50 Rabbit : 17800 uL/kg
Toluene	000108-88-3	Inhalation LC50 Rat : 49 gm/m3/4H; Inhalation LC50 Mouse : 400 ppm/24H;
Xylenes (o-, m-, p- isomers)	001330-20-7	Inhalation LC50 Rat : 5000 ppm/4H; Oral LD50 Rat : 4300 mg/kg;

Carcinogenicity:

Ingredient	IARC Group 1	IARC Group 2A	IARC Group 2B	NTP Known	NTP Suspect	OSHA
Aromatic Hydrocarbon Resin	No	No	No	No	No	No
Ethyl benzene	No	No	Yes	No	No	No
Toluene	No	No	No	No	No	No
Xylenes (o-, m-, p- isomers)	No	No	No	No	No	No

Ethyl benzene contained in this product has been shown to produce kidney, lung and liver tumors based on animal inhalation studies.

Mutagenicity: Ethyl benzene contained in this product has produced mutagenic effects based on animal studies.

Teratogenicity: Not applicable.

Reproductive Toxicity: Not applicable.

SECTION 12 - ECOLOGICAL INFORMATION

Environmental Fate: No data available for product.

Ecotoxicity: No data available for product.

SECTION 13 - DISPOSAL CONSIDERATIONS

Waste Disposal Procedures:

Consult all regulations (federal, state, provincial, local) or a qualified wasted disposal firm when characterizing waste for disposal. Waste/rejected product consisting of unused liquid product in sealed containers is a EPA Hazardous Waste #D001 (due to its ignitability). Dispose of all waste at a disposal facility as permitted by applicable government regulations. Dried waste and waste absorbed in a noncombustible media would not be hazardous if no longer combustible.

Because of the Xylene content (CAS# 1330-20-7) this product is considered a hazardous substance under the U.S. EPA Clean Water Act. Spills of this product must be reported to the national Response Center at 1-800-424-8802. Spill reporting requirements and reportable quantities vary by region.

In case of any spill or release, consult all applicable state and local regulations. Observing all precautions noted above, absorb spilled product with an inert noncombustible material and remove for disposal. Remove all sources of ignition. Do not use metal shovels or other tools which could create sparks.

SECTION 14 - TRANSPORTATION INFORMATION

Proper Shipping Name: Not Applicable

UN/NA Number: 3. UN3295, III

Domestic Hazard Class: Hydrocarbon liquid: NOS (Xylene, Ethyl Benzene)

Surface Freight Classification: Not Applicable

Label/Placard Required: Flammable Liquid

SECTION 15 - REGULATORY INFORMATION

REGULATORY CHEMICAL LISTS:

CERCLA (Comprehensive Response Compensation and Liability Act):
(None present unless listed below)

Chemical Name	CAS #	Wt %	CERCLA RQ
Ethyl benzene	000100-41-4	10	final RQ = 1000 pounds (454 kg)
Toluene	000108-88-3	1	final RQ = 1000 pounds (454 kg)
Xylenes (o-, m-, p- isomers)	001330-20-7	45	final RQ = 100 pounds (45.4 kg)

SARA Title III (Superfund Amendments and Reauthorization Act)

SARA Section 312/Tier I & II Hazard Categories:

Health Immediate (acute)	Yes
Health Delayed (chronic)	Yes
Flammable	Yes
Reactive	No
Pressure	No

302 Reportable Ingredients (Identification Threshold 1%.):

Chemical Name	CAS #	Wt %	SARA 302 TPQ

313 Reportable Ingredients (Chemicals present below reporting threshold are exempt):

Chemical Name	CAS #	Wt %
Ethyl benzene	000100-41-4	10
Toluene	000108-88-3	1
Xylenes (o-, m-, p- isomers)	001330-20-7	45

National Volatile Organic Compound Emission Standards For Architectural Coatings:

Volatile Organic Content: (gr/L) 440 g/l. This product meets the definition of "Quick Dry" under Architectural Coatings regulations.

WHMIS Classification(s): D2 B

This product has been classified in accordance with the hazard criteria of the Controlled Products Regulations (CPR). This MSDS contains all the information required by the CPR.

State Regulatory Information:

California Proposition 65: WARNING! This product contains substances known to the state of California to cause cancer, birth defects or other reproductive harm.

Massachusetts Hazardous Substance List(Identification threshold 0.001%(1ppm)):

Chemical Name	CAS #	Wt %

New Jersey Hazardous Substance List(Identification threshold (0.1%)):

Chemical Name	CAS #	Wt %
Ethyl benzene	000100-41-4	10
Toluene	000108-88-3	1
Xylenes (o-, m-, p- isomers)	001330-20-7	45

Pennsylvania Hazardous Substance List(Identification threshold 0.01%):

Chemical Name	CAS #	Wt %

CHEMICAL INVENTORY STATUS:

All chemicals in this product are listed or exempt from listing in the following countries:

US	CANADA		EUROPE	AUSTRALIA	JAPAN	KOREA	PHILIPPINES
TSCA	DSL	NDSL	EINECS/ELINCS	AICS	ENCS	ECL	PICCS
Yes	Yes	No	Yes	Yes	Not Determined	Not Determined	Not Determined

SECTION 16 - OTHER INFORMATION

Non-Hazardous Ingredient Disclosure:

Chemical Name	CAS Number

Prepared by:	EH&S Department
Approved by:	EH&S Department
Approved Date:	12/7/04

Disclaimer:
"The data included herein are presented in accordance with various environment, health and safety regulations. It is the responsibility of a recipient of the data to remain currently informed on chemical hazard information, to design and update its own program and to comply with all national, federal, state and local laws and regulations applicable to safety, occupational health, right-to-know and environmental protection."

VRH Construction Corp.

625 Eighth Avenue
2nd Flr, North Building
New York, NY 10018

Phone: 212-629-6187
Fax: 212-629-9243

SUBMITTAL NO. 07115-002
PACKAGE NO: 07115

TITLE: Bituthene Deck Prep
PROJECT: PANY/NJ-bt-200.200 WO 12

REQUIRED START: 5/26/2009
REQUIRED FINISH: 6/9/2009

DRAWING:
STATUS: 3
BIC: PANYNJ

DAYS HELD: 0
DAYS ELAPSED: 0
DAYS OVERDUE: -14

RECEIVED FROM		SENT TO		RETURNED BY		FORWARDED TO	
TG	JB	PANYNJ	KC	PANYNJ	KC	TG	JB

Revision No.	Description / Remarks	Received	Sent	Returned	Forwarded	Status	Sepias	Prints	Drawing Date	Held	Elapsed
000	Bituthene Deck Prep	5/26/2009	5/26/2009			3	0	8		0	0

Expedition®

BITUTHENE® DECK PREP®

Low viscosity surface treatment used to level and repair rough concrete decks prior to installing Bituthene waterproofing

07115-002
200.200 W.O. 12

Description

Bituthene® Deck Prep® is a low viscosity, two component, asphalt-modified urethane coating. It is used to level and repair rough concrete decks to which Bituthene waterproofing membranes will be applied. The VOC (Volatile Organic Compound) content is 10 g/L.

Architectural and Industrial Maintenance Regulations limit the VOC content in products classified as Architectural Coatings. Refer to Technical Letters at www.graceconstruction.com for most current list of allowable limits.

Advantages

- **Flexible**—cures to rubber-like coating
- **Low viscosity**—easy to use, self leveling compound
- **Fully adhered**—seals to concrete substrate to provide temporary waterproofing layer
- **No primer necessary**—apply directly to dry, unprimed concrete

Use

Bituthene Deck Prep is ideally suited as a:

- Leveling agent for rough concrete decks for new and rehab construction
- Non-structural repair material for defects in concrete decks for new and rehab construction
- Temporary waterproofing layer
- Primer layer for Bituthene waterproofing membranes

Compatibility

Bituthene Deck Prep is completely compatible with all other Bituthene products and with existing asphalt or coal tar-based waterproofing materials. It is also compatible with cured silicone and polyurethane sealants. It is not compatible with creosote, pentachlorophenol, linseed oil or polysulfide-based sealants. For further compatibility qualifications consult Bituthene Technical Letters 4 and 10.

Application Procedures

Safety, Storage and Handling Information
Bituthene products must be handled properly. Vapors from solvent-based primers and mastic are harmful and flammable. Grace Protection Board Adhesive is extremely flammable. For these products, the best available information on safe handling, storage, personal protection, health and environmental considerations has been gathered.

Product Advantages

- Flexible
- Low viscosity
- Fully adhered
- No primer necessary

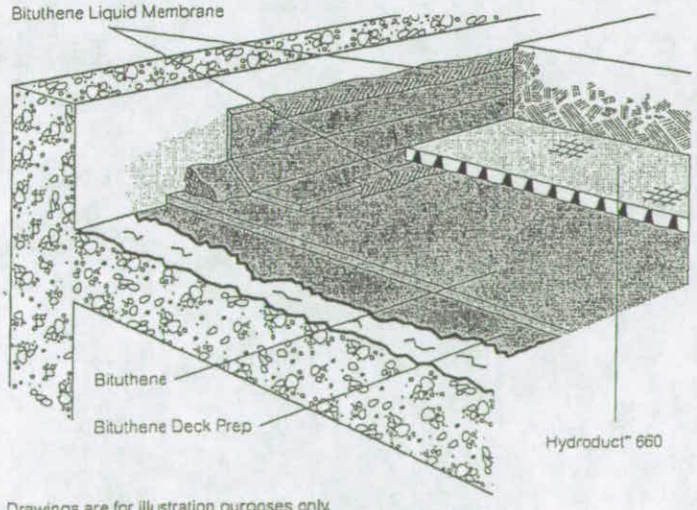

Drawings are for illustration purposes only.
Please refer to www.graceconstruction.com for specific application details.

Supply

Bituthene Deck Prep (Parts A & B)	
Unit size	4 gal (15.1 L)
Weight per unit	44 lbs (20 kg)
Units per pallet	24

Physical Properties

Property	Typical Value	Test Method
Color		
Part A	Black	
Part B	Clear	
Mixture of Parts A and B	Black	
Solids content	100%	ASTM D1644
Elongation	250% minimum	ASTM D412
Peel strength	5 lbs/in. (880 N/m) minimum	ASTM D903
Flexibility, 180° bend over 1 in. (25 mm) mandrel at -25°F (-32°C)	Unaffected	ASTM D1970

Material Safety Data Sheets (MSDS) are available at www.graceconstruction.com and users should acquaint themselves with this information. Carefully read detailed precaution statements on product labels and the MSDS before use.

Surface Preparation

All surfaces must be dry and free from dirt, grease, oil, dust or other contaminants. Bituthene Deck Prep may be applied at temperatures of 25°F (-4°C) or above. Below 40°F (5°C), store in a warm place before application.

Mixing

Add the entire contents of the Part B container to Part A and mix for 3 to 5 minutes until uniform. Part A is black and Part B is clear. Take care to scrape material from the side and bottom of the containers to assure thorough mixing. A low speed (150 rpm) mechanical mixer with flat paddle blades is required. Do not apply any material if streaks can be seen due to insufficient mixing.

Once mixed, Bituthene Deck Prep should be poured directly onto the deck and spread with a squeegee over all areas that are to be waterproofed with Bituthene waterproofing membranes. Apply Bituthene Deck Prep within one hour after mixing. More time may be available at lower temperatures, however, at high temperatures thickening and curing may be faster. Material that has cured should be discarded.

Bituthene Deck Prep should be applied in sufficient thickness to smooth all rough areas and fill all voids. The coverage rate is approximately 25 ft²/gal (0.6 m²/L) at 1/16 in. (1.5 mm) thickness. On very rough surfaces, the coverage could be lower. Apply material in thicknesses not to exceed ½ in. (13 mm) per coat. Bituthene Deck Prep will adhere to dry, unprimed concrete.

The product will support light foot traffic after an overnight cure. For interior applications, it may remain tacky even after fully cured.

Apply Bituthene waterproofing membranes directly to cured Bituthene Deck Prep. No priming or conditioning is necessary.

Cleaning

Clean tools and equipment with mineral spirits before Bituthene Deck Prep has cured. Mineral spirits is a combustible liquid and should be used only in accordance with the manufacturer's safety recommendations. **Do not use solvents to clean hands or skin.**

www.graceconstruction.com

For technical assistance call toll free at 866-333-3SBM (3726)

Bituthene, Deck Prep and Hydroduct are registered trademarks of W. R. Grace & Co.–Conn.

We hope the information here will be helpful. It is based on data and knowledge considered to be true and accurate and is offered for the users' consideration, investigation and verification, but we do not warrant the results to be obtained. Please read all statements, recommendations or suggestions in conjunction with our conditions of sale, which apply to all goods supplied by us. No statement, recommendation or suggestion is intended for any use which would infringe any patent or copyright. W. R. Grace & Co.–Conn., 62 Whittemore Avenue, Cambridge, MA 02140. In Canada, Grace Canada, Inc., 294 Clements Road, West, Ajax, Ontario, Canada L1S 3C6.

This product may be covered by patents or patents pending. Copyright 2007. W. R. Grace & Co.–Conn.

BIT-270C Printed in U.S.A. 3/07 FA/LI/1M

SECTION 1 - CHEMICAL PRODUCT AND COMPANY IDENTIFICATION

Product Name: Bituthene Deck Prep Part A
MSDS Number: M-85823
Cancelled MSDS Number: M-85794
MSDS Date: 03/03/2009
Chemical Family Name: Rubberized Asphalt/Aromatic Isocyanate Polyol Liquid Waterproofing Membrane
Product Use: Waterproofing Products
Chemical Formula: Mixture-NA
CAS # (Chemical Abstracts Service Number): Mixture-NA

Manufactured by:

W.R.Grace & Co.-Conn.
62 Whittemore Avenue
Cambridge, MA 02140

Grace Canada, Inc.
294 Clements Road West
Ajax, Ontario L1S 3C6

In Case of Emergency Call:

In USA: (617) 876-1400 In Canada: (905) 683-8561

SECTION 2 - COMPOSITION/INFORMATION ON INGREDIENTS

Ingredient	CAS#	Percent (max)
1,3-Butadiene, homopolymer, hydroxy-terminated	069102-90-5	10-25
Castor Oil, hydrogenated	008001-78-3	1-10
Heavy Paraffinic Distillate Solvent Extract	064742-04-7	10-25
Petroleum Asphalt	008052-42-4	10-25
Poly(oxypropylene) triol	025791-96-2	1-10

SECTION 3 - HAZARDS IDENTIFICATION

Emergency Overview:

Warning!
Causes severe eye irritation.
Causes skin irritation.
May cause severe respiratory tract irritation.
Causes digestive tract irritation if ingested.
May be harmful if absorbed through skin.
May cause liver damage and blood effects, based on animal studies.
May cause teratogenic effects.
May produce local skin tumors.
Mixed A and B components contain MDI which is respiratory and skin sensitizer.

HMIS Rating:

Health: 2*
Flammability: 1
Reactivity: 1
Personal Protective Equipment: B (See section 8)

Potential Health Effects:

Inhalation: May cause respiratory tract irritation.
Prolonged inhalation may cause sensitization.
Effects include: Nausea, headache, dizziness, irritation bronchitis, pulmonary edema (fluid in the lungs) and reduced lung function.
Eye Contact: Eye contact can cause severe irritation.
Prolonged eye contact can result in redness and itching.
Skin Contact: Skin contact causes irritation.
Prolonged skin contact can result in irritation causing redness and itching.

Petroleum oils in this product, have caused serious toxic effects including skin cancer, liver damage, blood effects and effects on the unborn based on tests with laboratory animals. These effects are not likely to occur in humans if good personal hygiene practices are used.
Effects include: redness, swelling, rash scaling or blistering.
Skin Absorption: Product can be absorbed through skin upon prolonged contact resulting in systemic effects such as nausea, headache, and general discomfort.
Ingestion: Single dose oral toxicity is believed to be low.
If ingested, causes irritation to the linings of the mouth, esophagus and stomach.
Effects include: Nausea, vomiting, diarrhea, sneezing coughing, labored breathing and burns.

SECTION 4 - FIRST AID MEASURES:

Skin Contact: In case of skin contact, clean fingernails and wash skin with soap and water. If residue remains, clean with waterless handcream or abrasive soap. Never use solvents.
If discomfort or irritation persists, consult a physician.
Remove contaminated clothing and wash before reuse.
Eye Contact: Flush eyes with water for at least 15 minutes while holding eyelids open.
Get immediate medical attention.
Ingestion: Do not induce vomiting.
Never give anything by mouth to an unconscious person.
If discomfort or irritation persists, consult a physician.
Inhalation: If symptoms develop, get fresh air. If symptoms persist, consult a physician.
If breathing has stopped, give artificial respiration then oxygen if needed.

SECTION 5 - FIRE AND EXPLOSION HAZARD DATA

Flash Point:	200°C/392°F (Estimated)
Flash Point Method:	Cleveland Open Cup
Lower Explosion Limit:	Not Available
Upper Explosion Limit:	Not Available
Auto-Ignition Temperature:	Not Available

NFPA Rating:

Health:	2
Flammability:	1
Reactivity:	1

Extinguishing Media: In case of fire, use water spray, dry chemical, Carbon dioxide or foam.
Special Fire Fighting Procedures: Wear self-contained breathing apparatus and complete personal protective equipment when potential for exposure to vapors or products of combustion exist. Water may be used to cool containers to prevent pressure build-up and possible auto-ignition or explosion. Avoid breathing hazardous vapors or products of combustion, keep upwind. Isolate area and keep unnecessary people away. Prevent run-off from fire control or dilution from entering streams or drinking water supplies.
Unusual Fire and Explosion Hazards: None unless noted below.

SECTION 6 - ACCIDENTAL RELEASE MEASURES:

Spills/Leaks: Use proper personal protective equipment. Do not flush to sewer or allow to enter waterways. Keep unnecessary people away.
Oil spills released directly to waterways may be subject to National Response Center (1-800-424-8802) reporting. Immediately contact your company's environmental coordinator or the Grace Health and safety Department.

SECTION 7 - HANDLING AND STORAGE

Precautionary Measures: Avoid contact with eyes, skin and clothing.
Do not take internally.
Practice good personal hygiene to avoid ingestion.
Use only with adequate ventilation.
Wash clothing before reuse.
Do not apply where odors may penetrate living areas.

To avoid skin contact, use gloves or barrier creams.
Wear work clothes with long sleeves if skin contact is possible.
Promptly cleanse hands with waterless hand cleaner, clean fingernails and wash with soap and water after handling.
Do not use solvents to clean skin.
FOR PROFESSIONAL USE ONLY. KEEP OUT OF CHILDREN'S REACH.

SECTION 8 - EXPOSURE CONTROLS AND PERSONAL PROTECTIVE EQUIPMENT

EXPOSURE GUIDELINES (US)

Ingredient	ACGIH TLV			OSHA PEL			
	TWA	STEL	Ceiling	TWA	STEL	Ceiling	Substance Specific and Mineral Dust PELs
1,3-Butadiene, homopolymer, hydroxy-terminated	-	-	-	- -	-	-	- -
Castor Oil, hydrogenated							
Heavy Paraffinic Distillate Solvent Extract							
Petroleum Asphalt	0.5 mg/m3 TWA (fume, inhalable fraction, as benzene soluble aerosol)	-	-	- -	-	-	- -
Poly(oxypropylene) triol	-	-	-	- -	-	-	- -

EXPOSURE GUIDELINES (CANADA)

Employers should consult local Provincial regulatory limits for exposure guidelines which may vary locally.

Engineering Controls: Portable ventilation should be used to prevent vapor build up during application in enclosed or depressed areas where natural ventilation may not be adequate. Portable equipment such as a Coppus Vano] portable blower/exhauster should be used in accordance with the manufacturer's instructions.

Personal Protective Equipment:

Respiratory Protection: MDI contained in mixed A and B components, has a very low vapor pressure and is not likely to exceed the permissible exposure limit (PEL) in unconfined spaces. Therefore, respiratory protection is not normally required in well ventilated areas except for individuals who are hypersensitive to isocyanates.
It should also be noted that although chemical cartridge respirators may provide protection against isocyanate exposure, they are not approved for such use by NIOSH. This is because MDI has poor warning properties. (The level at which it can be detected b odor is significantly above the PEL.)
In confined areas, indoors or where there is inadequate ventilation, supplied air (NIOSH Type TC-19C-XXX) or self-contained breathing apparatus (NIOSH Type TC-13-XXX) may be required.
Skin Protection: The following glove materials are acceptable: Nitrile or Butyl rubber gloves should be worn to protect against MDI and oils contained in the mixed A and B components.
Eye Protection: At minimum, safety glasses with side shields should be worn where exposure to splashing and high vapor concentrations are likely.
Work/Hygienic Practices: Use good personal hygiene practices.
To avoid skin contact, wear recommended gloves (see skin protection recommendation) and wash with soap and water after handling. Intermittent or occasional skin contact with petroleum asphalt is not expected to have serious health effects as long as good personal hygiene measures are taken. Promptly cleanse with waterless hand cleaner, clean fingernails and wash with soap and water after handling. All employees working with this product must exercise good and prudent personal hygiene practices.

SECTION 9 - PHYSICAL AND CHEMICAL PROPERTIES

Physical State:	Liquid
Appearance/Odor:	Thick, dark mixture with odor of rubber or petroleum.
Odor Threshold: (ppm)	Methylene Bisphenyl Isocyanate (MDI) = well above PEL
pH:	Unknown
Vapor Pressure: (Mm Hg)	.05
Vapor Density: (Air = 1)	Unknown
Solubility In Water:	Unknown
Specific Gravity: (Water = 1)	~1.1
Evaporation Rate: (Butyl Acetate = 1)	Unknown
Boiling Point:	150°C/302F° (Estimated)
Viscosity:	Unknown
Bulk Density: (Pounds/Cubic Foot)(Pcf)	Not Applicable
% Volatiles (gr/L): (70°F)(21°C)	Negligible

SECTION 10 - STABILITY AND REACTIVITY

Chemical Stability:	Stable
Conditions To Avoid:	Heat, Oxidizing materials, strong oxidizers, Strong acids, Organic materials, Water, isocyanates, phosphorus pentoxide, hydrogen fluoride and boric acid.
Hazardous Polymerization:	Will not polymerize.
Hazardous Decomposition Products:	Carbon dioxide, Carbon monoxide, Sulfur oxides and Low molecular weight hydrocarbons.

SECTION 11 - TOXICOLOGICAL INFORMATION

Ingredient(No data unless listed.)	CAS Number	LD50 and LC50
Castor oil, hydrogenated	008001-738-3	Oral LD50 Rat: >10 g/kg
Poly(oxypropylene) triol	025791-96-2	Oral LD50 Rat: >64 ml/kg; Dermal LD50 Rabbit: >20 mL/kg

Carcinogenicity:

Ingredient	IARC Group 1	IARC Group 2A	IARC Group 2B	NTP Known	NTP Suspect	OSHA
1,3-Butadiene, homopolymer, hydroxy-terminated	No	No	No	No	No	No
Castor oil, hydrogenated	No	No	No	No	No	No
Heavy Paraffinic Distillate Solvent Extract	No	No	No	No	No	No
Petroleum Asphalt	No	No	No	No	No	No
Poly(oxypropylene) triol	No	No	No	No	No	No

Animal tests indicate that prolonged and repeated skin contact with the asphalt in this product may produce local skin tumors.

Mutagenicity:	Not applicable.
Teratogenicity:	Petroleum oils in this product have caused effects on the unborn based on tests with laboratory animals.
Reproductive Toxicity:	Not applicable.

SECTION 12 - ECOLOGICAL INFORMATION

Environmental Fate:	No data available for product.
Ecotoxicity:	No data available for product.

SECTION 13 - DISPOSAL CONSIDERATIONS

Waste Disposal Procedures: Consult all regulations (federal, state, provincial, local) or a qualified waste disposal firm when characterizing waste for disposal. According to EPA (40 CFR § 261), waste of this product is not defined as hazardous. Dispose of waste in accordance with all applicable regulations.

SECTION 14 - TRANSPORTATION INFORMATION

Proper Shipping Name:	Not Applicable
UN/NA Number:	Not Applicable
Domestic Hazard Class:	Nonhazardous
Surface Freight Classification:	Adhesive Cements N.O.I.
Label/Placard Required:	Not Applicable

SECTION 15 - REGULATORY INFORMATION

REGULATORY CHEMICAL LISTS:

CERCLA (Comprehensive Response Compensation and Liability Act):
(None present unless listed below)

Chemical Name	CAS #	Wt %	CERCLA RQ

SARA Title III (Superfund Amendments and Reauthorization Act)

SARA Section 312/Tier I & II Hazard Categories:

Health Immediate (acute)	Yes
Health Delayed (chronic)	Yes
Flammable	No
Reactive	No
Pressure	No

302 Reportable Ingredients (Identification Threshold 1%.):

Chemical Name	CAS #	Wt %	SARA 302 TPQ

313 Reportable Ingredients (Chemicals present below reporting threshold are exempt):

Chemical Name	CAS #	Wt %
1,3-Butadiene	000106-99-0	.00011

National Volatile Organic Compound Emission Standards For Architectural Coatings:

Volatile Organic Content: (gr/L) 10 gr/L (as applied)

WHMIS Classification(s): D2 A

This product has been classified in accordance with the hazard criteria of the Controlled Products Regulations (CPR). This MSDS contains all the information required by the CPR.

State Regulatory Information:

California Proposition 65: WARNING! This product contains substances known to the state of California to cause cancer, birth defects or other reproductive harm.

Massachusetts Hazardous Substance List(Identification threshold 0.0001%(1ppm)):

Chemical Name	CAS #	Wt %
1,3-Butadiene	000106-99-0	.00011
Aromatic Oil	064742-10-5	.6265
Heavy Paraffinic distillate Solvent Extract	064742-04-7	12.53

New Jersey Hazardous Substance List(Identification threshold (0.1%)):

Chemical Name	CAS #	Wt %

Pennsylvania Hazardous Substance List(Identification threshold 0.01%):

Chemical Name	CAS #	Wt %

CHEMICAL INVENTORY STATUS:

All chemicals in this product are listed or exempt from listing in the following countries:

US	CANADA		EUROPE	AUSTRALIA	JAPAN	KOREA	PHILIPPINES
TSCA	DSL	NDSL	EINECS/ELINCS	AICS	ENCS	ECL	PICCS
Yes	Yes	No	Yes	No	No	No	No

SECTION 16 - OTHER INFORMATION

Non-Hazardous Ingredient Disclosure:

Chemical Name	CAS Number

Prepared by:	EH&S Department
Approved by:	EH&S Department
Approved Date:	03/04/2009

Disclaimer:

"The data included herein are presented in accordance with various environment, health and safety regulations. It is the responsibility of a recipient of the data to remain currently informed on chemical hazard information, to design and update its own program and to comply with all national, federal, state and local laws and regulations applicable to safety, occupational health, right-to-know and environmental protection."

SECTION 1 - CHEMICAL PRODUCT AND COMPANY IDENTIFICATION

Product Name:	Bituthene Deck Prep, Bituthene Liquid Membrane Part B
MSDS Number:	M-85795
Cancelled MSDS Number:	M-85736
MSDS Date:	10/30/07
Chemical Family Name:	Aromatic Isocyanate
Product Use:	Curative for Waterproof Sealing Compound
Chemical Formula:	Mixture-NA
CAS # (Chemical Abstracts Service Number):	Mixture-NA

Manufactured by:

W.R.Grace & Co.-Conn.
62 Whittemore Avenue
Cambridge, MA 02140

Grace Canada, Inc.
294 Clements Road West
Ajax, Ontario L1S 3C6

In Case of Emergency Call:

In USA: (617) 876-1400 In Canada: (905) 683-8561

SECTION 2 - COMPOSITION/INFORMATION ON INGREDIENTS

Ingredient	CAS#	Percent (max)
1,1'-Methylenebis (isocyanato-) benzene	026447-40-5	50-100
Benzene, 1,1'-methylenebis[isocyanato-, homopolymer	039310-05-9	10-25
Hydrogenated terphenyls	061788-32-7	25-50
Methylene bisphenol isocyanate (MDI)	000101-68-8	25-50
Polyphenyls, quater- and higher, partially hydrogenated	068956-74-1	1-10
Terphenyls	026140-60-3	1-10
Triethyl phosphate	000078-40-0	1-10

SECTION 3 - HAZARDS IDENTIFICATION

Emergency Overview:

Caution!
Causes eye irritation.
Causes skin irritation.
May cause respiratory tract irritation.
Causes digestive tract irritation if ingested.
Mixed components are harmful if absorbed through the skin.
May cause skin and respiratory sensitization.
Mixed components contain petroleum oils, which have caused serious toxic effects including skin cancer, liver damage, blood effects and effects on the unborn based on tests with laboratory animals.

HMIS Rating:

Health:	2*
Flammability:	1
Reactivity:	1
Personal Protective Equipment:	B (See Section 8)

Potential Health Effects:

Inhalation:
May cause respiratory tract irritation.
Prolonged inhalation may cause sensitization.
Effects include: Nausea, headache, dizziness, irritation, bronchitis, pulmonary edema (fluid in the lungs) and reduced lung function.

Eye Contact:
Eye contact causes severe irritation.
Prolonged eye contact can result in tissue damage.

Skin Contact:
Skin contact causes irritation.
Prolonged skin contact can result in irritation causing redness and itching.
May cause sensitization.
Petroleum oils present when A and B components are mixed, have been associated with serious toxic effects including skin cancer, liver damage, blood effects and effects on the unborn, based on tests with laboratory animals. These effects are not likely to occur in humans if good personal hygiene practices are used.
Effects include: Redness, swelling, rash, scaling or blistering.

Skin Absorption:
Isocyanate absorbed through the skin can lead to symptoms similar to those caused by inhalation.

Ingestion:
Due to the physical nature of this product, ingestion is not likely.
If ingested, causes irritation to the linings of the mouth, esophagus and stomach.
Effects include: Coughing and sore throat.

SECTION 4 - FIRST AID MEASURES:

Skin Contact:
In case of skin contact, clean fingernails and wash skin with soap and water. If residue remains, clean with waterless handcream or abrasive soap. Never use solvents.
If discomfort or irritation persists, consult a physician.
Remove contaminated clothing and wash before reuse.
Eye Contact:
Flush eyes with water for at least 15 minutes while holding eyelids open.
If discomfort or irritation persists, consult a physician.
Ingestion:
Do not induce vomiting.
Never give anything by mouth to an unconscious person.
If discomfort or irritation persists, consult a physician.
Inhalation:
If symptoms develop, get fresh air. If symptoms persist, consult a physician.
If breathing has stopped, give artificial respiration then oxygen if needed.

SECTION 5 - FIRE AND EXPLOSION HAZARD DATA

Flash Point:	200C/392F (Estimated)
Flash Point Method:	Cleveland Open Cup
Lower Explosion Limit:	Not Available
Upper Explosion Limit:	Not Available
Auto-Ignition Temperature:	Not Available

NFPA Rating:

Health:	2
Flammability:	1
Reactivity:	1

Extinguishing Media: In case of fire, use water spray, dry chemical, Carbon dioxide or foam.
Special Fire Fighting Procedures:
Wear self-contained breathing apparatus and complete personal protective equipment when potential for exposure to vapors or products of combustion exist. Water may be used to cool containers to prevent pressure build-up and possible auto-ignition or explosion. Avoid breathing hazardous vapors or products of combustion, keep upwind.

Isolate area and keep unnecessary people away. Prevent run-off from fire control or dilution from entering streams or drinking water supplies.

Unusual Fire and Explosion Hazards:

None unless noted below.

SECTION 6 - ACCIDENTAL RELEASE MEASURES:

Spills/Leaks:

Use proper personal protective equipment. Do not flush to sewer or allow to enter waterways. Keep unnecessary people away.

SECTION 7 - HANDLING AND STORAGE

Precautionary Measures:

Avoid contact with eyes, skin and clothing.
Do not take internally.
Practice good personal hygiene to avoid ingestion.
Use only with adequate ventilation.
Wash clothing before reuse.
Do not apply where odors may penetrate living areas.
To avoid skin contact, use gloves or barrier creams.
Wear work clothes with long sleeves if skin contact is possible.
Promptly cleanse hands with waterless hand cleaner, clean fingernails and wash with soap and water after handling.
Do not use solvents to clean skin.
FOR PROFESSIONAL USE ONLY. KEEP OUT OF CHILDREN'S REACH.

SECTION 8 - EXPOSURE CONTROLS AND PERSONAL PROTECTIVE EQUIPMENT

EXPOSURE GUIDELINES (US)

Ingredient	ACGIH TLV			OSHA PEL			Other
	TWA	STEL	Ceiling	TWA	STEL	Ceiling	
1,1'-Methylenebis (isocyanato-) benzene	-	-	-	-	-		-
Benzene, 1,1'-methylenebis[isocyanato-, homopolymer	-	-	-	-	-		-
Hydrogenated terphenyls	0.5 ppm TWA (non-irradiated)	-	-	0.5 ppm TWA; 5 mg/m3 TWA	-		-
Methylene bisphenol isocyanate (MDI)	0.005 ppm TWA	-	-	-	-		-
Polyphenyls, quater- and higher, partially hydrogenated	-	-	-	-	-		-
Terphenyls	-	-	5 mg/m3 Ceiling	-	-		-

Triethyl phosphate	-	-	-	-	-		-

EXPOSURE GUIDELINES (CANADA)

Employers should consult local Provincial regulatory limits for exposure guidelines which may vary locally.

Engineering Controls: Portable ventilation should be used to prevent vapor build up during application in enclosed or depressed areas where natural ventilation may not be adequate. Portable equipment such as a Coppus Vano] portable blower/exhauster should be used in accordance with the manufacturer's instructions.

Personal Protective Equipment:

Respiratory Protection: MDI contained in mixed A and B components, has a very low vapor pressure and is not likely to exceed the permissible exposure limit (PEL) in unconfined spaces. Therefore, respiratory protection is not normally required in well ventilated areas except for individuals who are hypersensitive to isocyanates. It should also be noted that although chemical cartridge respirators may provide protection against isocyanate exposure, they are not approved for such use by NIOSH. This is because MDI has poor warning properties. (The level at which it can be detected by odor is significantly above the PEL.) In confined areas, indoors or where there is inadequate ventilation, supplied air (NIOSH Type TC-19C-XXX) or self-contained breathing apparatus (NIOSH Type TC-13F-XXX) may be required.

Skin Protection: The following glove materials are acceptable: Nitrile or Butyl rubber gloves should be worn to protect against MDI and oils contained in the mixed A and B component.

Eye Protection: At minimum, safety glasses with side shields should be worn where splashing and high vapor concentrations are likely.

Work/Hygienic Practices: Use good personal hygiene practices.

Avoid rubbing eyes while handling. Incidental ingestion of residue on hands can be avoided by using good personal hygiene practices.

To avoid skin contact, wear recommended gloves (see skin protection recommendation) and wash with soap and water after handling. Intermittent or occasional skin contact with petroleum asphalt is not expected to have serious health effects as long as good personal hygiene measures are taken. Promptly cleanse with waterless hand cleaner, clean fingernails and wash with soap and water after handling. All employees working with this product must exercise good and prudent personal hygiene practices.

SECTION 9 - PHYSICAL AND CHEMICAL PROPERTIES

Physical State:	Liquid
Appearance/Odor:	Clear yellow Liquid with a faint aromatic odor.
Odor Threshold: (ppm)	Methylene Bisphenyl Isocyanate (MDI) = well above PEL
pH:	Unknown
Vapor Pressure: (Mm Hg)	0.05
Vapor Density: (Air = 1)	8.5 (Estimated)
Solubility In Water:	Reacts
Specific Gravity: (Water = 1)	~1.0
Evaporation Rate: (Butyl Acetate = 1)	Unknown
Boiling Point:	150°C/302°F (Estimated)
Viscosity:	Unknown
Bulk Density: (Pounds/Cubic Foot)(Pcf)	Not Applicable
% Volatiles (gr/L): (70°F) (21°C)	Negligible

SECTION 10 - STABILITY AND REACTIVITY

Chemical Stability:	Stable
Conditions To Avoid:	Sparks and Open flames.
Hazardous Polymerization:	Will not polymerize.
Hazardous Decomposition Products:	Acrid smoke.

SECTION 11 - TOXICOLOGICAL INFORMATION

Ingredient(No data unless listed.)	CAS Number	LD50 and LC50
Hydrogenated terphenyls	061788-32-7	Oral LD50 Rat: 17500 mg/kg; Oral LD50 Mouse: 12500 mg/kg
Methylene bisphenol isocyanate (MDI)	000101-68-8	Oral LD50 Rat: 9200 mg/kg; Oral LD50 Mouse: 2200 mg/kg
Terphenyls	026140-60-3	Oral LD50 Mouse: 13200 mg/kg
Triethyl phosphate	000078-40-0	Oral LD50 Rat: 1311 mg/kg; Oral LD50 Mouse: 1500 mg/kg

Carcinogenicity:

Ingredient	IARC Group 1	IARC Group 2A	IARC Group 2B	NTP Known	NTP Suspect	OSHA
1,1'-Methylenebis (isocyanato-) benzene	No	No	No	No	No	No
Benzene, 1,1'-methylenebis[isocyanato-, homopolymer	No	No	No	No	No	No
Hydrogenated terphenyls	No	No	No	No	No	No
Methylene bisphenol isocyanate (MDI)	No	No	No	No	No	No
Polyphenyls, quater- and higher, partially hydrogenated	No	No	No	No	No	No
Terphenyls	No	No	No	No	No	No
Triethyl phosphate	No	No	No	No	No	No

Mutagenicity: Not applicable.

Teratogenicity: Petroleum oils contained in the mixed A and B components have caused effects on the unborn based on tests with laboratory animals.

Reproductive Toxicity: Not applicable.

SECTION 12 - ECOLOGICAL INFORMATION

Environmental Fate: No data available for product.

Ecotoxicity: No data available for product.

SECTION 13 - DISPOSAL CONSIDERATIONS

Waste Disposal Procedures:
Consult all regulations (federal, state, provincial, local) or a qualified waste disposal firm when characterizing waste for disposal. According to EPA (40 CFR § 261), waste of this product is not defined as hazardous. Dispose of waste in accordance with all applicable regulations.

SECTION 14 - TRANSPORTATION INFORMATION

Proper Shipping Name: Not Applicable
UN/NA Number: Not Applicable
Domestic Hazard Class: Nonhazardous
Surface Freight Classification: Adhesive Cements N.O.I.
Label/Placard Required: Not Applicable

SECTION 15 - REGULATORY INFORMATION

REGULATORY CHEMICAL LISTS:

CERCLA (Comprehensive Response Compensation and Liability Act):
(None present unless listed below)

Chemical Name	CAS #	Wt %	CERCLA RQ
Methylene bisphenol isocyanate (MDI)	000101-68-8	49.4	5000 lb final RQ; 2270 kg final RQ

SARA Title III (Superfund Amendments and Reauthorization Act)

SARA Section 312/Tier I & II Hazard Categories:

Health Immediate (acute)	Yes
Health Delayed (chronic)	Yes
Flammable	No
Reactive	No
Pressure	No

302 Reportable Ingredients (Identification Threshold 1%.):

Chemical Name	CAS #	Wt %	SARA 302 TPQ

313 Reportable Ingredients (Chemicals present below reporting threshold are exempt):

Chemical Name	CAS #	Wt %
Methylene bisphenol isocyanate (MDI)	000101-68-8	49.4

National Volatile Organic Compound Emission Standards For Architectural Coatings:

Volatile Organic Content: (gr/L) 10 gr/L as applied

WHMIS Classification(s): D2 A

This product has been classified in accordance with the hazard criteria of the Controlled Products Regulations (CPR). This MSDS contains all the information required by the CPR.

State Regulatory Information:

California Proposition 65: This product does not contain substances known to the state of California to cause cancer, birth defects or other reproductive harm.

Massachusetts Hazardous Substance List(Identification threshold 0.001%(1ppm)):

Chemical Name	CAS #	Wt %

New Jersey Hazardous Substance List(Identification threshold (0.1%)):

Chemical Name	CAS #	Wt %
Methylene bisphenol isocyanate (MDI)	000101-68-8	49.4

Pennsylvania Hazardous Substance List(Identification threshold 0.01%):

Chemical Name	CAS #	Wt %

CHEMICAL INVENTORY STATUS:
All chemicals in this product are listed or exempt from listing in the following countries:

US	CANADA		EUROPE	AUSTRALIA	JAPAN	KOREA	PHILIPPINES
TSCA	DSL	NDSL	EINECS/ELINCS	AICS	ENCS	ECL	PICCS
Yes	Yes	No	Yes	Yes	No	No	No

SECTION 16 - OTHER INFORMATION

Non-Hazardous Ingredient Disclosure:

Chemical Name	CAS Number

Prepared by: EH&S Department
Approved by: EH&S Department
Approved Date: 11/02/2004

Disclaimer:

"The data included herein are presented in accordance with various environment, health and safety regulations. It is the responsibility of a recipient of the data to remain currently informed on chemical hazard information, to design and update its own program and to comply with all national, federal, state and local laws and regulations applicable to safety, occupational health, right-to-know and environmental protection."

VRH Construction Corp.

625 Eighth Avenue
2nd Flr, North Building
New York, NY 10018

Phone: 212-629-6187
Fax: 212-629-9243

SUBMITTAL NO. 07115-003
PACKAGE NO: 07115

TITLE: Bituthene Liquid Membrane
PROJECT: PANY/NJ-bt-200.200 WO 12

DRAWING:
STATUS: 3
BIC: PANYNJ

REQUIRED START: 5/26/2009
REQUIRED FINISH: 6/9/2009

DAYS HELD: 0
DAYS ELAPSED: 0
DAYS OVERDUE: -14

RECEIVED FROM		SENT TO		RETURNED BY		FORWARDED TO	
TG	JB	PANYNJ	KC	PANYNJ	KC	TG	JB

Revision No.	Description / Remarks	Received	Sent	Returned	Forwarded	Status	Sepias	Prints	Drawing Date	Held	Elapsed
000	Bituthene Liquid Membrane	5/26/2009	5/26/2009			3	0	8		0	0

Expedition®

07115-003
200.200 W.O. 12

Membrane Ancillary Products

web www.graceconstruction.com
APPROACH DATA ■UPDATES ■TECH LETTERS ■DETAILS ■MSDS ■CONTACT ■FAQS

Bituthene® Liquid Membrane

Two component, elastomeric, liquid applied detailing compound for use with Grace waterproofing membranes

Advantages

- Liquid applied – conforms to irregular profiles
- Waterproof – resistant to water vapor and water pressure
- Tough, rubber-like – flexible and damage resistant
- Chemically cured – unaffected by in-service temperature variations
- Cold applied – no flame hazard
- System compatible – formulated for use with Grace waterproofing membrane systems

Description

Bituthene® Liquid Membrane is a two component, elastomeric, cold applied, trowel grade material designed for a variety of uses with the Grace waterproofing systems. The VOC (Volatile Organic Compound) content is 10 g/L.

Use

Bituthene Liquid Membrane is ideally suited for the following uses:

- Fillet material at inside corners
- Reinforcement material at inside corners
- Flashing material around drains, protrusions, curbs and parapets
- Sealing material at terminations
- Repair material for defects on concrete surfaces
- Flashing material at corners

The two parts of Bituthene Liquid Membrane are mixed on site and trowelled on to provide a simple and quick waterproofing detailing aid in conjunction with Bituthene, Preprufe® and Procor® systems.

Compatibility

Bituthene Liquid Membrane is completely compatible with Bituthene, Preprufe and Procor and with existing asphalt or coal tar-based waterproofing materials. It is also compatible with cured silicone and polyurethane sealants. It is not compatible with creosote, pentachlorophenol, linseed oil or polysulfide-based sealants.

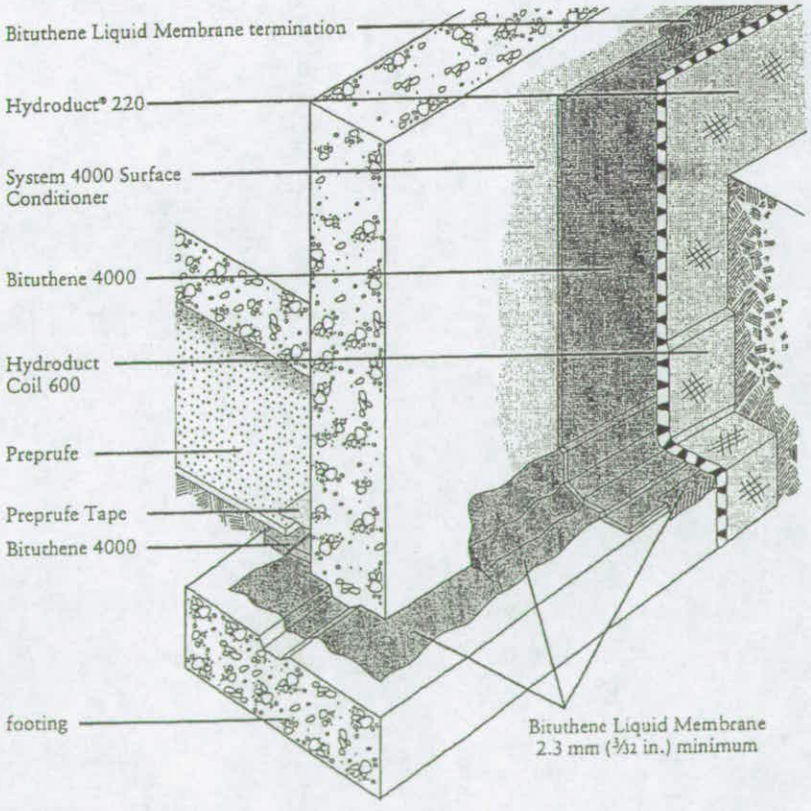

GRACE
Construction Products

Supply

Bituthene Liquid Membrane (Parts A & B)		
Unit size	5.7 L (1.5 gal)	15.1 L (4 gal)
Weight per unit	8 kg (16 lbs)	20 kg (44 lbs)
Units per pallet	100	24

Physical Properties

Property	Typical Value	Test Method
Color Part A Part B Mixture of Parts A and B	 Black Clear Black	
Solids Content	100%	ASTM D 1644
Elongation	250% minimum	ASTM D 412
Peel Strength	880 N/m (5 lbs/in.) minimum	ASTM D 903
Flexibility, 180° bend over 25 mm (1 in.) mandrel at -32°C (-25°F)	Unaffected	ASTM D 1970

Application Procedures

Safety, Storage and Handling Information

Bituthene products must be handled properly. Vapors from solvent-based primers and mastic are harmful and flammable. Grace Protection Board Adhesive is extremely flammable. For these products, the best available information on safe handling, storage, personal protection, health and environmental considerations has been gathered. Material Safety Data Sheets (MSDS) are available at www.graceconstruction.com and users should acquaint themselves with this information. Carefully read detailed precaution statements on product labels and the MSDS before use.

Surface Preparation

All surfaces must be dry and free from dirt, grease, oil, dust or other contaminants. Bituthene Liquid Membrane may be applied at temperatures of -4°C (25°F) or above. Below 5°C (40°F), store in a warm place before application.

Mixing

Add the entire contents of the Part B container to Part A and mix for 3 to 5 minutes until uniform. Part A is black and Part B is clear. Take care to scrape material from the side and bottom of the containers to assure thorough mixing. A low speed (150 rpm) mechanical mixer with flat paddle blades is required. Do not apply any material if streaks can be seen due to insufficient mixing.

Once mixed, Bituthene Liquid Membrane must be applied by trowel within 1.5 hours. More time is available at lower temperatures. At high temperatures, thickening and curing will be faster. Material that has thickened must be discarded. The material will cure to a very flexible rubber-like material.

Bituthene Liquid Membrane must be applied at a minimum thickness of 2.3 mm (3/32 in.) unless otherwise noted on details. In fillet applications, the face of the fillet should be a minimum of 20 mm (3/4 in.). In corner flashing application details, it should extend 150 mm (6 in.) in each direction from the corner. Bituthene Liquid Membrane will adhere to primed or unprimed concrete.

Bituthene Liquid Membrane should be allowed to cure at least 24 hours before flood testing.

Coverage

As a fillet material, 3.8 L (1 gal) will cover approximately 30 m (100 linear feet). As a flashing material, 3.8 L (1 gal) will cover approximately 1.6 m^2 (17 ft^2). As a fillet and reinforcement, 3.8 L (1 gal) will cover approximately 4.3 m (14 linear feet).

Cleaning

Clean tools and equipment with mineral spirits before Bituthene Liquid Membrane has cured. Mineral spirits is a combustible liquid and should be used only in accordance with the manufacturer's safety recommendations. Do not use solvents to clean hands or skin.

For Technical Assistance call us toll free at 866-333-3SBM (3726).

web Visit our web site at www.graceconstruction.com

printed on recycled paper

W. R. Grace & Co. - Conn. 62 Whittemore Avenue Cambridge, MA 02140

Bituthene, Preprufe, Procor and Hydroduct are registered trademarks of W. R. Grace & Co. - Conn.

We hope the information here will be helpful. It is based on data and knowledge considered to be true and accurate and is offered for the users' consideration, investigation and verification, but we do not warrant the results to be obtained. Please read all statements, recommendations or suggestions in conjunction with our conditions of sale, which apply to all goods supplied by us. No statement, recommendation or suggestion is intended for any use which would infringe any patent or copyright. W. R. Grace & Co. - Conn., 62 Whittemore Avenue, Cambridge, MA 02140. In Canada, Grace Canada, Inc., 294 Clements Road, West, Ajax, Ontario, Canada L1S 3C6.

These products may be covered by patents or patents pending. Copyright 2001. W. R. Grace & Co. - Conn. BIT-230 Printed in USA 9/01 FA/LI/1.5M

GRACE Construction Products

W. R. GRACE
MATERIAL SAFETY DATA SHEET

Product Name: Bituthene Liquid Membrane Part A
MSDS ID Number: M-85822
MSDS Date: 07/25/2008

SECTION 1 - CHEMICAL PRODUCT AND COMPANY IDENTIFICATION

Product Name:	Bituthene Liquid Membrane Part A
MSDS Number:	M-85822
Cancelled MSDS Number:	M-85724
MSDS Date:	03/03/2009
Chemical Family Name:	Rubberized Asphalt/Aromatic Isocyanate Polyol Liquid Waterproofing Membrane
Product Use:	Waterproofing Products
Chemical Formula:	Mixture-NA
CAS # (Chemical Abstracts Service Number):	Mixture-NA

Manufactured by:

W.R.Grace & Co.-Conn.	Grace Canada, Inc.
62 Whittemore Avenue	294 Clements Road West
Cambridge, MA 02140	Ajax, Ontario L1S 3C6

In Case of Emergency Call:
In USA: (617) 876-1400 In Canada: (905) 683-8561

SECTION 2 - COMPOSITION/INFORMATION ON INGREDIENTS

Ingredient	CAS#	Percent (max)
1,3-Butadiene, homopolymer, hydroxy-terminated	069102-90-5	10-25
Castor oil, hydrogenated	008001-78-3	1-10
Fumed, silica	069012-64-2	25-50
Heavy Paraffinic Distillate Solvent Extract	064742-04-7	10-25
Petroleum Asphalt	008052-42-4	10-25
Poly(oxypropylene) triol	025791-96-2	1-10

SECTION 3 - HAZARDS IDENTIFICATION

Emergency Overview:

Caution!
Causes severe eye irritation.
Causes skin irritation.
Causes severe respiratory tract irritation.
Causes digestive tract irritation if ingested.
May be harmful if absorbed through skin.
May cause liver damage and blood effects, based on animal studies.
May cause teratogenic effects.
May produce local skin tumors.
Mixed A and B components contain MDI which is a respiratory and skin sensitizer.

HMIS Rating:

Health:	2*
Flammability:	1
Reactivity:	1
Personal Protective Equipment:	B (See Section 8)

Potential Health Effects:

Inhalation: May cause respiratory tract irritation.
Prolonged inhalation may cause sensitization.
Effects include: Nausea, headache, dizziness irritation, bronchitis, pulmonary edema (fluid in the lungs) and reduced lung function.
Eye Contact: Eye contact can cause severe irritation.
Prolonged eye contact can result in redness and itching.
Skin Contact: Skin contact causes irritation.
Prolonged skin contact can result in irritation causing redness and itching.

Petroleum oils in this product, have caused serious toxic effects including skin cancer, liver damage, blood effects and effects on the unborn based on tests with laboratory animals. These effects are not likely to occur in humans if good personal hygiene practices are used.
Effects include: redness, swelling, rash scaling or blistering.
Skin Absorption: Product can be absorbed through the skin upon prolonged contact resulting in systemic effects such as nausea, headache, and general discomfort.
Ingestion: Single dose oral toxicity is believed to be low.
If ingested, causes irritation to the linings of the mouth, esophagus and stomach.
Effects include: Nausea, vomiting, diarrhea, sneezing, coughing, labored breathing and burns.

SECTION 4 - FIRST AID MEASURES:

Skin Contact: In case of skin contact, clean fingernails and wash skin with soap and water. If residue remains, clean with waterless handcream or abrasive soap. Never use solvents.
If discomfort or irritation persists, consult a physician.
Remove contaminated clothing and wash before reuse.
Eye Contact: Flush eyes with water for at least 15 minutes while holding eyelids open.
Get immediate medical attention.
Ingestion: Do not induce vomiting.
Never give anything by mouth to an unconscious person.
If discomfort or irritation persists, consult a physician.
Inhalation: If symptoms develop, get fresh air. If symptoms persist, consult a physician.
If breathing has stopped, give artificial respiration then oxygen if needed.

SECTION 5 - FIRE AND EXPLOSION HAZARD DATA

Flash Point:	200C/392F (Estimated)
Flash Point Method:	Cleveland Open Cup
Lower Explosion Limit:	Not Available
Upper Explosion Limit:	Not Available
Auto-Ignition Temperature:	Not Available

NFPA Rating:

Health:	2
Flammability:	1
Reactivity:	1

Extinguishing Media: In case of fire, use water spray, dry chemical, Carbon dioxide or foam.
Special Fire Fighting Procedures: Wear self-contained breathing apparatus and complete personal protective equipment when potential for exposure to vapors or products of combustion exist. Water may be used to cool containers to prevent pressure build-up and possible auto-ignition or explosion. Avoid breathing hazardous vapors or products of combustion, keep upwind. Isolate area and keep unnecessary people away. Prevent run-off from fire control or dilution from entering streams or drinking water supplies.
Unusual Fire and Explosion Hazards: None unless noted below.

SECTION 6 - ACCIDENTAL RELEASE MEASURES:

Spills/Leaks: Use proper personal protective equipment. Do not flush to sewer or allow to enter waterways. Keep unnecessary people away.
Oil spills released directly to waterways may be subject to National Response Center (1-800-424-8802) reporting. Immediately contact your company's environmental coordinator or the Grace Environmental Health and Safety Department.

SECTION 7 - HANDLING AND STORAGE

Precautionary Measures:
Avoid contact with eyes, skin and clothing.
Do not take internally.
Practice good personal hygiene to avoid ingestion.
Use only with adequate ventilation.
Wash clothing before reuse.
Do not apply where membrane odors may penetrate living areas.
To avoid skin contact, use gloves or barrier creams.
Wear work clothes with long sleeves if skin contact is possible.
Promptly cleanse hands with waterless hand cleaner, clean fingernails and wash with soap and water after handling.
Do not use solvents to clean skin.
FOR PROFESSIONAL USE ONLY. KEEP OUT OF CHILDREN'S REACH.

SECTION 8 - EXPOSURE CONTROLS AND PERSONAL PROTECTIVE EQUIPMENT

EXPOSURE GUIDELINES (US)

Ingredient	ACGIH TLV			OSHA PEL			
	TWA	STEL	Ceiling	TWA	STEL	Ceiling	Substance Specific and Mineral Dust PELs
1,3-Butadiene, homopolymer, hydroxy-terminated	-	-	-	-	-	-	-
Castor oil, hydrogenated	-	-	-	-	-	-	-
Fumes, silica	-	-	-	-	-	-	-
Heavy Paraffinic Distillate Solvent Extract	-	-	-	-	-	-	-
Petroleum Asphalt	0.5 mg/m3 TWA (fume, inhalable fraction, as benzene soluble aerosol)	-	-	-	-	-	-
Poly(oxypropylene) triol	-	-	-	-	-	-	-

EXPOSURE GUIDELINES (CANADA)

Employers should consult local Provincial regulatory limits for exposure guidelines which may vary locally.

Engineering Controls: Portable ventilation should be used to prevent vapor build up during application in enclosed or depressed areas where natural ventilation may not be adequate. Portable equipment such as a Coppus Vano] portable blower/exhauster should be used in accordance with the manufacturer's instructions.

Personal Protective Equipment:

Respiratory Protection: MDI contained in mixed A and B components, has a very low vapor pressure and is not likely to exceed the permissible exposure limit (PEL) in unconfined spaces. Therefore, respiratory protection is not normally required in well ventilated areas except for individuals who are hypersensitive to isocyanates.
It should also be noted that although chemical cartridge respirators may provide protection against isocyanate exposure, they are not approved for such use by NIOSH. This is because MDI has poor warning properties. (The level at which it can be detected b odor is significantly above the PEL.)
In confined areas, indoors or where there is inadequate ventilation, supplied air (NIOSH Type TC-19C-XXX) or self-contained breathing apparatus (NIOSH Type TC-13-XXX) may be required.
Skin Protection: The following glove materials are acceptable: Nitrile or Butyl rubber gloves should be worn to protect against MDI and oils contained in the mixed A and B components.
Eye Protection: At minimum, safety glasses with side shields should be worn where exposure to splashing and high vapor concentrations are likely.
Work/Hygienic Practices: Use good personal hygiene practices.

Avoid rubbing eyes while handling. Incidental ingestion of residue on hands can be avoided by using good personal hygiene practices.
To avoid skin contact, wear recommended gloves (see skin protection recommendation) and wash with soap and water after handling. Intermittent or occasional skin contact with petroleum asphalt is not expected to have serious health effects as long as good personal hygiene measures are taken. Promptly cleanse with waterless hand cleaner, clean fingernails and wash with soap and water after handling. All employees working with this product must exercise good and prudent personal hygiene practices.

SECTION 9 - PHYSICAL AND CHEMICAL PROPERTIES

Physical State:	Liquid
Appearance/Odor:	Thick, dark mixture with odor of rubber or petroleum.
Odor Threshold: (ppm)	Methylene Bisphenyl Isocyanate (MDI) = well above PEL
pH:	Unknown
Vapor Pressure: (Mm Hg)	.05
Vapor Density: (Air = 1)	Unknown
Solubility In Water:	Not Applicable
Specific Gravity: (Water = 1)	~1.1
Evaporation Rate: (Butyl Acetate = 1)	Unknown
Boiling Point:	150°C/302°F (Estimated)
Viscosity:	Unknown
Bulk Density: (Pounds/Cubic Foot)(Pcf)	Not Applicable
% Volatiles (gr/L): (70°F)(21°C)	Negligible

SECTION 10 - STABILITY AND REACTIVITY

Chemical Stability:	Stable
Conditions To Avoid:	Heat, Oxidizing materials, Strong oxidizers, Strong acids, Organic materials, Water, isocyanates, phosphorous pentoxide, hydrogen flouride and boric acid.
Hazardous Polymerization:	Will not polymerize.
Hazardous Decomposition Products:	Carbon dioxide, Carbon monoxide, Sulfur oxides and Low molecular weight hydrocarbons.

SECTION 11 - TOXICOLOGICAL INFORMATION

Ingredient(No data unless listed.) **CAS Number** **LD50 and LC50**

Carcinogenicity:

Ingredient	IARC Group 1	IARC Group 2A	IARC Group 2B	NTP Known	NTP Suspect	OSHA
1,3-Butadiene, homopolymer, hydroxy-terminated	No	No	No	No	No	No
Castor oil, hydrogenated	No	No	No	No	No	No
Fumes, silica	No	No	No	No	No	No
Heavy Paraffinic Distillate Solvent Extract	No	No	No	No	No	No
Petroleum Asphalt	No	No	No	No	No	No
Poly(oxypropylene) triol	No	No	No	No	No	No

Animal tests indicate that prolonged and repeated skin contact with the asphalt in this product may produce local skin tumors.

Mutagenicity:	Not applicable.
Teratogenicity:	Petroleum oils in this product have caused effects on the unborn based on tests with laboratory animals.
Reproductive Toxicity:	Not applicable.

SECTION 12 - ECOLOGICAL INFORMATION

Environmental Fate:	No data available for product.
Ecotoxicity:	No data available for product.

SECTION 13 - DISPOSAL CONSIDERATIONS

Waste Disposal Procedures: Consult all regulations (federal, state, provincial, local) or a qualified waste disposal firm when characterizing waste for disposal. According to EPA (40 CFR § 261), waste of this product is not defined as hazardous. Dispose of waste in accordance with all applicable regulations.

SECTION 14 - TRANSPORTATION INFORMATION

Proper Shipping Name:	Not Applicable
UN/NA Number:	Not Applicable
Domestic Hazard Class:	Nonhazardous
Surface Freight Classification:	Adhesive Cements N.O.I.
Label/Placard Required:	Not Applicable

SECTION 15 - REGULATORY INFORMATION

REGULATORY CHEMICAL LISTS:

CERCLA (Comprehensive Response Compensation and Liability Act):
(None present unless listed below)

Chemical Name	CAS #	Wt %	CERCLA RQ

SARA Title III (Superfund Amendments and Reauthorization Act)

SARA Section 312/Tier I & II Hazard Categories:

Health Immediate (acute)	Yes
Health Delayed (chronic)	Yes
Flammable	No
Reactive	No
Pressure	No

302 Reportable Ingredients (Identification Threshold 1%.):

Chemical Name	CAS #	Wt %	SARA 302 TPQ

313 Reportable Ingredients (Chemicals present below reporting threshold are exempt):

Chemical Name	CAS #	Wt %
1,3-Butadiene	000106-99-0	.00011

National Volatile Organic Compound Emission Standards For Architectural Coatings:

Volatile Organic Content: (gr/L) 10 gr/L (as applied)

WHMIS Classification(s): D2 A

This product has been classified in accordance with the hazard criteria of the Controlled Products Regulations (CPR). This MSDS contains all the information required by the CPR.

State Regulatory Information:

California Proposition 65: WARNING! This product contains substances known to the state of California to cause cancer, birth defects or other reproductive harm.

Massachusetts Hazardous Substance List(Identification threshold 0.0001%(1ppm)):

Chemical Name	CAS #	Wt %
1,3-Butadiene	000106-99-0	.00011
Aromatic Oil	064742-10-5	.6265
Heavy Paraffinic Distillate Solvent Extract	064742-04-7	12.53

New Jersey Hazardous Substance List(Identification threshold (0.1%)):

Chemical Name	CAS #	Wt %

Pennsylvania Hazardous Substance List(Identification threshold 0.01%):

Chemical Name	CAS #	Wt %

CHEMICAL INVENTORY STATUS:

All chemicals in this product are listed or exempt from listing in the following countries:

US	CANADA		EUROPE	AUSTRALIA	JAPAN	KOREA	PHILIPPINES
TSCA	DSL	NDSL	EINECS/ELINCS	AICS	ENCS	ECL	PICCS
Yes	Yes	No	Yes	No	No	No	No

SECTION 16 - OTHER INFORMATION

Non-Hazardous Ingredient Disclosure:

Chemical Name	CAS Number

Prepared by: EH&S Department
Approved by: EH&S Department
Approved Date: 02/11/2009

Disclaimer:

"The data included herein are presented in accordance with various environment, health and safety regulations. It is the responsibility of a recipient of the data to remain currently informed on chemical hazard information, to design and update its own program and to comply with all national, federal, state and local laws and regulations applicable to safety, occupational health, right-to-know and environmental protection."

SECTION 1 - CHEMICAL PRODUCT AND COMPANY IDENTIFICATION

Product Name: Bituthene Deck Prep, Bituthene Liquid Membrane Part B
MSDS Number: M-85795
Cancelled MSDS Number: M-85736
MSDS Date: 10/30/07
Chemical Family Name: Aromatic Isocyanate
Product Use: Curative for Waterproof Sealing Compound
Chemical Formula: Mixture-NA
CAS # (Chemical Abstracts Service Number): Mixture-NA

Manufactured by:

W.R.Grace & Co.-Conn.
62 Whittemore Avenue
Cambridge, MA 02140

Grace Canada, Inc.
294 Clements Road West
Ajax, Ontario L1S 3C6

In Case of Emergency Call:

In USA: (617) 876-1400 In Canada: (905) 683-8561

SECTION 2 - COMPOSITION/INFORMATION ON INGREDIENTS

Ingredient	CAS#	Percent (max)
1,1'-Methylenebis (isocyanato-) benzene	026447-40-5	50-100
Benzene, 1,1'-methylenebis[isocyanato-, homopolymer	039310-05-9	10-25
Hydrogenated terphenyls	061788-32-7	25-50
Methylene bisphenol isocyanate (MDI)	000101-68-8	25-50
Polyphenyls, quater- and higher, partially hydrogenated	068956-74-1	1-10
Terphenyls	026140-60-3	1-10
Triethyl phosphate	000078-40-0	1-10

SECTION 3 - HAZARDS IDENTIFICATION

Emergency Overview:

Caution!
Causes eye irritation.
Causes skin irritation.
May cause respiratory tract irritation.
Causes digestive tract irritation if ingested.
Mixed components are harmful if absorbed through the skin.
May cause skin and respiratory sensitization.
Mixed components contain petroleum oils, which have caused serious toxic effects including skin cancer, liver damage, blood effects and effects on the unborn based on tests with laboratory animals.

HMIS Rating:

Health:	2*
Flammability:	1
Reactivity:	1
Personal Protective Equipment:	B (See Section 8)

Potential Health Effects:

Inhalation:
May cause respiratory tract irritation.
Prolonged inhalation may cause sensitization.
Effects include: Nausea, headache, dizziness, irritation, bronchitis, pulmonary edema (fluid in the lungs) and reduced lung function.
Eye Contact:
Eye contact causes severe irritation.
Prolonged eye contact can result in tissue damage.
Skin Contact:
Skin contact causes irritation.
Prolonged skin contact can result in irritation causing redness and itching.
May cause sensitization.
Petroleum oils present when A and B components are mixed, have been associated with serious toxic effects including skin cancer, liver damage, blood effects and effects on the unborn, based on tests with laboratory animals. These effects are not likely to occur in humans if good personal hygiene practices are used.
Effects include: Redness, swelling, rash, scaling or blistering.
Skin Absorption:
Isocyanate absorbed through the skin can lead to symptoms similar to those caused by inhalation.

Ingestion:
Due to the physical nature of this product, ingestion is not likely.
If ingested, causes irritation to the linings of the mouth, esophagus and stomach.
Effects include: Coughing and sore throat.

SECTION 4 - FIRST AID MEASURES:

Skin Contact:
In case of skin contact, clean fingernails and wash skin with soap and water. If residue remains, clean with waterless handcream or abrasive soap. Never use solvents.
If discomfort or irritation persists, consult a physician.
Remove contaminated clothing and wash before reuse.

Eye Contact:
Flush eyes with water for at least 15 minutes while holding eyelids open.
If discomfort or irritation persists, consult a physician.

Ingestion:
Do not induce vomiting.
Never give anything by mouth to an unconscious person.
If discomfort or irritation persists, consult a physician.

Inhalation:
If symptoms develop, get fresh air. If symptoms persist, consult a physician.
If breathing has stopped, give artificial respiration then oxygen if needed.

SECTION 5 - FIRE AND EXPLOSION HAZARD DATA

Flash Point:	200C/392F (Estimated)
Flash Point Method:	Cleveland Open Cup
Lower Explosion Limit:	Not Available
Upper Explosion Limit:	Not Available
Auto-Ignition Temperature:	Not Available

NFPA Rating:

Health:	2
Flammability:	1
Reactivity:	1

Extinguishing Media: In case of fire, use water spray, dry chemical, Carbon dioxide or foam.

Special Fire Fighting Procedures:
Wear self-contained breathing apparatus and complete personal protective equipment when potential for exposure to vapors or products of combustion exist. Water may be used to cool containers to prevent pressure build-up and possible auto-ignition or explosion. Avoid breathing hazardous vapors or products of combustion, keep upwind.

Isolate area and keep unnecessary people away. Prevent run-off from fire control or dilution from entering streams or drinking water supplies.

Unusual Fire and Explosion Hazards:

None unless noted below.

SECTION 6 - ACCIDENTAL RELEASE MEASURES:

Spills/Leaks:

Use proper personal protective equipment. Do not flush to sewer or allow to enter waterways. Keep unnecessary people away.

SECTION 7 - HANDLING AND STORAGE

Precautionary Measures:

Avoid contact with eyes, skin and clothing.
Do not take internally.
Practice good personal hygiene to avoid ingestion.
Use only with adequate ventilation.
Wash clothing before reuse.
Do not apply where odors may penetrate living areas.
To avoid skin contact, use gloves or barrier creams.
Wear work clothes with long sleeves if skin contact is possible.
Promptly cleanse hands with waterless hand cleaner, clean fingernails and wash with soap and water after handling.
Do not use solvents to clean skin.
FOR PROFESSIONAL USE ONLY. KEEP OUT OF CHILDREN'S REACH.

SECTION 8 - EXPOSURE CONTROLS AND PERSONAL PROTECTIVE EQUIPMENT

EXPOSURE GUIDELINES (US)

Ingredient	ACGIH TLV			OSHA PEL			Other
	TWA	STEL	Ceiling	TWA	STEL	Ceiling	
1,1'-Methylenebis (isocyanato-) benzene	-	-	-	-	-		-
Benzene, 1,1'-methylenebis[isocyanato-, homopolymer	-	-	-	-	-		-
Hydrogenated terphenyls	0.5 ppm TWA (non-irradiated)	-	-	0.5 ppm TWA; 5 mg/m3 TWA	-		-
Methylene bisphenol isocyanate (MDI)	0.005 ppm TWA	-	-	-	-		-
Polyphenyls, quater- and higher, partially hydrogenated	-	-	-	-	-		-
Terphenyls	-	-	5 mg/m3 Ceiling	-	-		-

Triethyl phosphate	-	-	-	-	-		-

EXPOSURE GUIDELINES (CANADA)

Employers should consult local Provincial regulatory limits for exposure guidelines which may vary locally.

Engineering Controls: Portable ventilation should be used to prevent vapor build up during application in enclosed or depressed areas where natural ventilation may not be adequate. Portable equipment such as a Coppus Vano] portable blower/exhauster should be used in accordance with the manufacturer's instructions.

Personal Protective Equipment:

Respiratory Protection: MDI contained in mixed A and B components, has a very low vapor pressure and is not likely to exceed the permissible exposure limit (PEL) in unconfined spaces. Therefore, respiratory protection is not normally required in well ventilated areas except for individuals who are hypersensitive to isocyanates. It should also be noted that although chemical cartridge respirators may provide protection against isocyanate exposure, they are not approved for such use by NIOSH. This is because MDI has poor warning properties. (The level at which it can be detected by odor is significantly above the PEL.) In confined areas, indoors or where there is inadequate ventilation, supplied air (NIOSH Type TC-19C-XXX) or self-contained breathing apparatus (NIOSH Type TC-13F-XXX) may be required.

Skin Protection: The following glove materials are acceptable: Nitrile or Butyl rubber gloves should be worn to protect against MDI and oils contained in the mixed A and B component.

Eye Protection: At minimum, safety glasses with side shields should be worn where splashing and high vapor concentrations are likely.

Work/Hygienic Practices: Use good personal hygiene practices.

Avoid rubbing eyes while handling. Incidental ingestion of residue on hands can be avoided by using good personal hygiene practices.

To avoid skin contact, wear recommended gloves (see skin protection recommendation) and wash with soap and water after handling. Intermittent or occasional skin contact with petroleum asphalt is not expected to have serious health effects as long as good personal hygiene measures are taken. Promptly cleanse with waterless hand cleaner, clean fingernails and wash with soap and water after handling. All employees working with this product must exercise good and prudent personal hygiene practices.

SECTION 9 - PHYSICAL AND CHEMICAL PROPERTIES

Physical State:	Liquid
Appearance/Odor:	Clear yellow Liquid with a faint aromatic odor.
Odor Threshold: (ppm)	Methylene Bisphenyl Isocyanate (MDI) = well above PEL
pH:	Unknown
Vapor Pressure: (Mm Hg)	0.05
Vapor Density: (Air = 1)	8.5 (Estimated)
Solubility In Water:	Reacts
Specific Gravity: (Water = 1)	~1.0
Evaporation Rate: (Butyl Acetate = 1)	Unknown
Boiling Point:	150°C/302°F (Estimated)
Viscosity:	Unknown
Bulk Density: (Pounds/Cubic Foot)(Pcf)	Not Applicable
% Volatiles (gr/L): (70°F) (21°C)	Negligible

SECTION 10 - STABILITY AND REACTIVITY

Chemical Stability:	Stable
Conditions To Avoid:	Sparks and Open flames.
Hazardous Polymerization:	Will not polymerize.
Hazardous Decomposition Products:	Acrid smoke.

SECTION 11 - TOXICOLOGICAL INFORMATION

Ingredient(No data unless listed.)	CAS Number	LD50 and LC50
Hydrogenated terphenyls	061788-32-7	Oral LD50 Rat: 17500 mg/kg; Oral LD50 Mouse: 12500 mg/kg
Methylene bisphenol isocyanate (MDI)	000101-68-8	Oral LD50 Rat: 9200 mg/kg; Oral LD50 Mouse: 2200 mg/kg
Terphenyls	026140-60-3	Oral LD50 Mouse: 13200 mg/kg
Triethyl phosphate	000078-40-0	Oral LD50 Rat: 1311 mg/kg; Oral LD50 Mouse: 1500 mg/kg

Carcinogenicity:

Ingredient	IARC Group 1	IARC Group 2A	IARC Group 2B	NTP Known	NTP Suspect	OSHA
1,1'-Methylenebis (isocyanato-) benzene	No	No	No	No	No	No
Benzene, 1,1'-methylenebis[isocyanato-, homopolymer	No	No	No	No	No	No
Hydrogenated terphenyls	No	No	No	No	No	No
Methylene bisphenol isocyanate (MDI)	No	No	No	No	No	No
Polyphenyls, quater- and higher, partially hydrogenated	No	No	No	No	No	No
Terphenyls	No	No	No	No	No	No
Triethyl phosphate	No	No	No	No	No	No

Mutagenicity: Not applicable.

Teratogenicity: Petroleum oils contained in the mixed A and B components have caused effects on the unborn based on tests with laboratory animals.

Reproductive Toxicity: Not applicable.

SECTION 12 - ECOLOGICAL INFORMATION

Environmental Fate: No data available for product.

Ecotoxicity: No data available for product.

SECTION 13 - DISPOSAL CONSIDERATIONS

Waste Disposal Procedures:

Consult all regulations (federal, state, provincial, local) or a qualified waste disposal firm when characterizing waste for disposal. According to EPA (40 CFR § 261), waste of this product is not defined as hazardous. Dispose of waste in accordance with all applicable regulations.

SECTION 14 - TRANSPORTATION INFORMATION

Proper Shipping Name: Not Applicable

UN/NA Number: Not Applicable

Domestic Hazard Class: Nonhazardous

Surface Freight Classification: Adhesive Cements N.O.I.

Label/Placard Required: Not Applicable

SECTION 15 - REGULATORY INFORMATION

REGULATORY CHEMICAL LISTS:

CERCLA (Comprehensive Response Compensation and Liability Act): (None present unless listed below)

Chemical Name	CAS #	Wt %	CERCLA RQ
Methylene bisphenol isocyanate (MDI)	000101-68-8	49.4	5000 lb final RQ; 2270 kg final RQ

SARA Title III (Superfund Amendments and Reauthorization Act)

SARA Section 312/Tier I & II Hazard Categories:

Health Immediate (acute)	Yes
Health Delayed (chronic)	Yes
Flammable	No
Reactive	No
Pressure	No

302 Reportable Ingredients (Identification Threshold 1%.):

Chemical Name	CAS #	Wt %	SARA 302 TPQ

313 Reportable Ingredients (Chemicals present below reporting threshold are exempt):

Chemical Name	CAS #	Wt %
Methylene bisphenol isocyanate (MDI)	000101-68-8	49.4

National Volatile Organic Compound Emission Standards For Architectural Coatings:

Volatile Organic Content: (gr/L) 10 gr/L as applied

WHMIS Classification(s): D2 A

This product has been classified in accordance with the hazard criteria of the Controlled Products Regulations (CPR). This MSDS contains all the information required by the CPR.

State Regulatory Information:

California Proposition 65: This product does not contain substances known to the state of California to cause cancer, birth defects or other reproductive harm.

Massachusetts Hazardous Substance List(Identification threshold 0.001%(1ppm)):

Chemical Name	CAS #	Wt %

New Jersey Hazardous Substance List(Identification threshold (0.1%)):

Chemical Name	CAS #	Wt %
Methylene bisphenol isocyanate (MDI)	000101-68-8	49.4

Pennsylvania Hazardous Substance List(Identification threshold 0.01%):

Chemical Name	CAS #	Wt %

CHEMICAL INVENTORY STATUS:

All chemicals in this product are listed or exempt from listing in the following countries:

US	CANADA		EUROPE	AUSTRALIA	JAPAN	KOREA	PHILIPPINES
TSCA	DSL	NDSL	EINECS/ELINCS	AICS	ENCS	ECL	PICCS
Yes	Yes	No	Yes	Yes	No	No	No

SECTION 16 - OTHER INFORMATION

Non-Hazardous Ingredient Disclosure:

Chemical Name	CAS Number

Prepared by: EH&S Department
Approved by: EH&S Department
Approved Date: 11/02/2004

Disclaimer:

"The data included herein are presented in accordance with various environment, health and safety regulations. It is the responsibility of a recipient of the data to remain currently informed on chemical hazard information, to design and update its own program and to comply with all national, federal, state and local laws and regulations applicable to safety, occupational health, right-to-know and environmental protection."

VRH Construction Corp.

625 Eighth Avenue
2nd Flr, North Building
New York, NY 10018

Phone: 212-629-6187
Fax: 212-629-9243

SUBMITTAL NO. 07115-004
PACKAGE NO: 07115

TITLE: Bituthene Mastic
PROJECT: PANY/NJ-bt-200.200 WO 12

REQUIRED START: 5/26/2009
REQUIRED FINISH: 6/9/2009

DRAWING:
STATUS: 3
BIC: PANYNJ

DAYS HELD: 0
DAYS ELAPSED: 0
DAYS OVERDUE: -14

RECEIVED FROM		SENT TO		RETURNED BY		FORWARDED TO	
TG	JB	PANYNJ	KC	PANYNJ	KC	TG	JB

Revision No.	Description / Remarks	Received	Sent	Returned	Forwarded	Status	Sepias	Prints	Drawing Date	Held	Elapsed
000	Bituthene Mastic	5/26/2009	5/26/2009			3	0	8		0	0

Expedition®

07115-004
200.200 W.O. 12

BITUTHENE® MASTIC

One part, gun or trowel applied mastic for sealing Bituthene membrane terminations and details

Description

Bituthene® Mastic is a rubberized, asphalt-based mastic. It has excellent adhesion to structural concrete, masonry and wood. The VOC (Volatile Organic Compound) content is 200 g/L.

Architectural and Industrial Maintenance Regulations limit the VOC content in products classified as Architectural Coatings. Refer to Technical Letters at www.graceconstruction.com for most current list of allowable limits.

Bituthene Mastic is available in tubes or pails.

Use

Bituthene Mastic is designed to seal terminations, edges of patches and overlaps in detail areas. On vertical applications, the mastic must be applied to both the top and bottom terminations.

Limitation

Bituthene Mastic is an integral part of the Bituthene waterproofing system. This mastic should not be applied where it will be covered with Bituthene waterproofing membrane, except as permitted as a temporary cutoff. It should not be used as a primary waterproofing material.

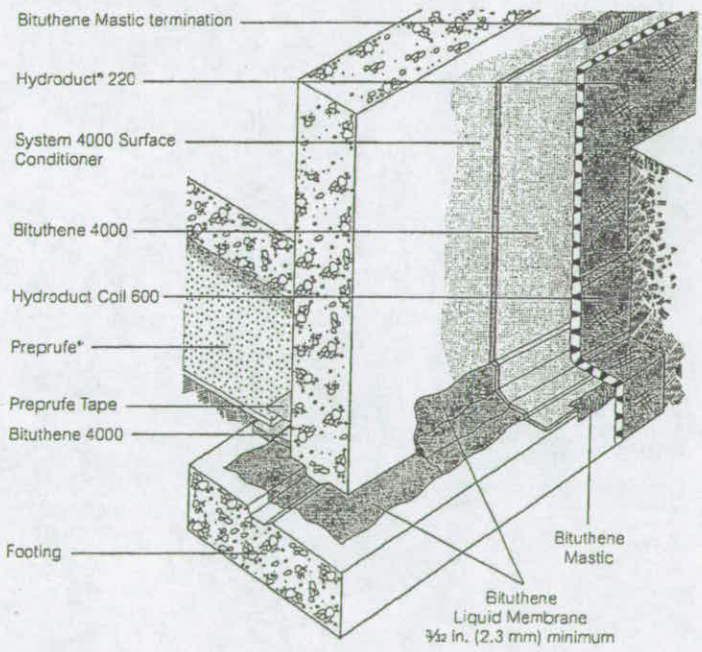

Drawings are for illustration purposes only.
Please refer to www.graceconstruction.com for specific application details.

Product Advantages

- Excellent adhesion
- Seals terminations, edges of patches and overlaps in detail areas

Supply

Bituthene Mastic		
Unit size	30 oz (.9 L) tube	5 gal (18.9 L) pail
Packaging	12 tubes/carton	36 pails/pallet
Weight	33 lbs (15 kg)/carton	54 lbs (24 kg)/pail
Coverage	1 tube—65 linear feet (20 m) [0.25 in. (6 mm) x 0.25 in. (6 mm) bead]	100 linear ft/gal (8.1 m/L) [1 in. (25 mm) wide troweling]

Installation Procedures

Safety, Storage and Handling Information

Bituthene products must be handled properly. Vapors from solvent-based primers and mastic are harmful and flammable. For these products, the best available information on safe handling, storage, personal protection, health and environmental considerations has been gathered. Material Safety Data Sheets (MSDS) are available at www.graceconstruction.com and users should acquaint themselves with this information. Carefully read detailed precaution statements on product labels and the MSDS before use.

Application

Apply Bituthene Mastic either with a caulking gun or trowel. If applied with a caulking gun, level the bead with a trowel to about 0.125 in. (3 mm) thickness and 0.5 in. (13 mm) to 1 in. (25 mm) width. When applied as a temporary cutoff, trowel Bituthene Mastic to 0.060 in. (1.5 mm) thickness. Bituthene waterproofing membrane may be placed over the thin cutoff the next day.

On the bottom edge of vertical applications, Bituthene Mastic should be troweled upward. Use it liberally at membrane terminations.

Material usage requirements for Bituthene Mastic will vary widely from job to job. On large horizontal plaza areas with few protrusions, only about one quarter of a tube may be required per roll of membrane. A vertical application may require one half tube or more per roll of membrane. Applications involving other protrusions may require one or more tubes per roll.

Clean tools with mineral spirits at the end of each day. Mineral spirits is a combustible liquid and should be used only in accordance with the manufacturer's safety recommendations. Do not use solvents to clean hands or skin.

www.graceconstruction.com

For technical assistance call toll free at 866-333-3SBM (3726)

Bituthene, Hydroduct and Preprufe are registered trademarks of W. R. Grace & Co.–Conn.

We hope the information here will be helpful. It is based on data and knowledge considered to be true and accurate and is offered for the users' consideration, investigation and verification, but we do not warrant the results to be obtained. Please read all statements, recommendations or suggestions in conjunction with our conditions of sale, which apply to all goods supplied by us. No statement, recommendation or suggestion is intended for any use which would infringe any patent or copyright. W. R. Grace & Co.–Conn., 62 Whittemore Avenue, Cambridge, MA 02140. In Canada, Grace Canada, Inc., 294 Clements Road, West, Ajax, Ontario, Canada L1S 3C6.

This product may be covered by patents or patents pending. Copyright 2007. W. R. Grace & Co.–Conn.

BIT-290D Printed in U.S.A. 3/07 FA/LI/1M

RECYCLE

SECTION 1 - CHEMICAL PRODUCT AND COMPANY IDENTIFICATION

Product Name: Bituthene Mastic
MSDS Number: M-85778
Cancelled MSDS Number: M-85753
MSDS Date: 09/25/2006
Chemical Family Name: Modified Asphalt & Inorganic Fillers In Organic Solvent.
Product Use: Termination Sealer
Chemical Formula: Mixture-NA
CAS # (Chemical Abstracts Service Number): Mixture-NA

Manufactured by:

W.R.Grace & Co.-Conn.
62 Whittemore Avenue
Cambridge, MA 02140

Grace Canada, Inc.
294 Clements Road West
Ajax, Ontario L1S 3C6

In Case of Emergency Call:

In USA: (617) 876-1400 In Canada: (905) 683-8561

SECTION 2 - COMPOSITION/INFORMATION ON INGREDIENTS

Ingredient	CAS#	Percent (max)
1,2,4-Trimethylbenzene	000095-63-6	0-16
Kaolin	001332-58-7	25-50
Organophilic clay	121888-66-2	1-10
Petroleum Asphalt	008052-42-4	25-50
Silica, amorphous	112945-52-5	1-10
Solvent naphtha, petroleum, light arom.	064742-95-6	10-25
Styrene-Butadiene block copolymer	009003-55-8	1-10
Naphthenic Distillates	64742-52-5	1-10

SECTION 3 - HAZARDS IDENTIFICATION

Emergency Overview:

Caution!
Combustible liquid.
May be harmful if inhaled.
Inhalation of high vapor concentration can cause CNS depression, unconsciousness or death.
Causes severe respiratory tract irritation.
Causes severe eye irritation.
Causes skin irritation.
Harmful if absorbed through skin.
May produce local skin tumors.
May be harmful if ingested.
Causes digestive tract irritation if ingested.

HMIS Rating:

Health: 2*
Flammability: 2
Reactivity: 0
Personal Protective Equipment: B,G (See Section 8)

Potential Health Effects:

Inhalation: Causes severe respiratory tract irritation.
Effects include: Drowsiness, nausea, CNS depression, vomiting, coma, headache, dizziness, loss of consciousness, death, coughing, anemia, narcotic effects, irritation.
Eye Contact: Eye contact can cause severe irritation.
Prolonged eye contact can result in tissue damage.
Skin Contact: Skin contact causes irritation.
Prolonged skin contact can result in irritation causing redness and itching.
May defat skin.
Animal tests indicate that prolonged and repeated skin contact with the asphalt in this product may produce local skin tumors.
Skin Absorption: Harmful if absorbed through the skin.
May cause effects similar to those defined under inhalation.
Ingestion: Harmful if ingested.
If ingested, causes irritation to the linings of the mouth, esophagus and stomach.
Effects include: Drowsiness, nausea, fatigue, pulmonary edema (from aspiration into the lungs from vomiting), CNS depression, vomiting, diarrhea, headache, dizziness, loss of consciousness, death, anemia and narcotic effects.

SECTION 4 - FIRST AID MEASURES:

Skin Contact: In case of skin contact, clean fingernails and wash skin with soap and water. If residue remains, clean with waterless handcream or abrasive soap. Never use solvents.
Call a physician.
Remove contaminated clothing and wash before reuse.
Eye Contact: Flush eyes with water for at least 15 minutes while holding eyelids open.
Get immediate medical attention.
Ingestion: Do not induce vomiting.
Never give anything by mouth to an unconscious person.
If discomfort or irritation persists, consult a physician.
Inhalation: If symptoms develop, get fresh air. If symptoms persist, consult a physician.
If breathing has stopped, give artificial respiration then oxygen if needed.

SECTION 5 - FIRE AND EXPLOSION HAZARD DATA

Flash Point:	104.0°F
Flash Point Method:	Pensky Marten Closed Cup
Lower Explosion Limit:	Not Available
Upper Explosion Limit:	Not Available
Auto-Ignition Temperature:	Not Available

NFPA Rating:

Health:	2
Flammability:	2
Reactivity:	0

Extinguishing Media: In case of fire, use water spray, dry chemical, Carbon dioxide or foam.
Special Fire Fighting Procedures: Firefighters should be equipped with Self-contained Breathing Apparatus (SCBA) to prevent inhalation of hazardous decomposition products. (See Section 10.) Water spray may be ineffective when extinguishing fire. Water may be used to cool closed containers. Do not scatter spilled material with high pressure water stream. Fog nozzles are preferred if water is used.
Unusual Fire and Explosion Hazards: Keep away from heat, electrical equipment, sparks, and open flame. Extinguish all sources of ignition. Vapors are heavier than air and may travel along ground to ignition sources such as electrical equipment, smoking materials, welding equipment, and pilot lights. Product can ignite explosively. Closed containers may explode when exposed to extreme heat. Flammable liquid. Keep containers closed except when in use.

SECTION 6 - ACCIDENTAL RELEASE MEASURES:

Spills/Leaks: Use proper personal protective equipment. Do not flush to sewer or allow to enter waterways. Keep unnecessary people away.

SECTION 7 - HANDLING AND STORAGE

Precautionary Measures:
Avoid contact with eyes, skin and clothing.
Use only with adequate ventilation.
Forced ventilation is necessary in pits and other confined areas.
Leave work area periodically to reduce effects of inhalation. Respirators must be worn if exposures cannot be maintained below exposure limits.
Do not take internally.
Practice good personal hygiene to avoid ingestion.
Wash clothing before reuse.
To avoid skin contact, use gloves or barrier creams. Promptly cleanse hands with waterless hand cleaner, clean fingernails and wash with soap and water after handling.
When working around heating and air conditioning systems, block intake vents to prevent vapor from traveling into buildings. Keep away from heat, sparks and flame. Enforce no smoking policy for all trades present on job site. Keep container closed tightly when not in use to avoid unnecessary release of vapors and to prevent spills. Do not reuse empty containers.
FOR PROFESSIONAL USE ONLY. KEEP OUT OF CHILDREN'S REACH

SECTION 8 - EXPOSURE CONTROLS AND PERSONAL PROTECTIVE EQUIPMENT

EXPOSURE GUIDELINES (US)

Ingredient	ACGIH TLV			OSHA PEL			Other
	TWA	STEL	Ceiling	TWA	STEL	Ceiling	
1,2,4-Trimethylbenzene	-	-	-	-	-	-	NIOSH - 25 ppm TWA; 125 mg/m 3 TWA
Kaolin	2 mg/m3 TWA (respirable fraction) (The value is for particulate matter	-	-	total dust: 10 mg/m3 TWA; respirable fraction: 5 mg/m3 TWA	-	-	-
Organophilic clay	-	-	-	-	-	-	-
Petroleum Asphalt	0.5 mg/m3 TWA (inhalable fraction); (as benzene-soluble aerosol)	-	-	-	-	-	-
Silica, amorphous, fumed, cryst.-free	-	-	-	-	-	-	-
Solvent naphtha, petroleum, light arom.	-	-	-	-	-	-	-
Styrene-Butadiene block copolymer	-	-	-	-	-	-	-
Naphthenic Distillates	–	–	–	–	–	–	–

EXPOSURE GUIDELINES (CANADA)

Employers should consult local Provincial regulatory limits for exposure guidelines which may vary locally.

Engineering Controls: Explosion-proof portable ventilation is required to prevent vapor build-up during application in enclosed or depressed areas. Vapors are heavier than air and will build-up in confined spaces without ventilation. Vapor build-up can be life threatening. Portable equipment such as a Coppus Vano portable blower/exhauster should be used in accordance with the manufacturer's instructions.

Personal Protective Equipment:

Respiratory Protection: Respiratory protection is not normally required. However, a chemical cartridge respirator with organic vapor cartridge is required at or above the applicable exposure limits (Consult above Exposure Guidelines). If no limits exist, use an approved respirator whenever a vapor or mist is generated or if respiratory irritation occurs. Supplied air respirator (SCBA) is required at exposure levels above the capabilities of a chemical cartridge respirator.
Skin Protection: PVA supported polyvinyl alcohol, nitrile or viton gloves are recommended. Natural rubber or butyl rubber gloves should not be worn.
Eye Protection: At minimum, safety glasses with side shields should be worn where exposure to excessive dust or spray is likely.
Work/Hygienic Practices: Use good personal hygiene practices.
You and your personnel must completely understand the fire and explosion hazards before using combustible liquid based products.
To avoid skin contact, wear recommended gloves (see skin protection recommendation) and wash with soap and water after handling. Intermittent or occasional skin contact with petroleum asphalt is not expected to have serious health effects as long as good personal hygiene measures are taken. Promptly cleanse with waterless hand cleaner, clean fingernails and wash with soap and water after handling. All employees working with this product must exercise good and prudent personal hygiene practices.
Avoid rubbing eyes while handling.

SECTION 9 - PHYSICAL AND CHEMICAL PROPERTIES

Physical State:	Liquid
Appearance/Odor:	Hydrocarbon (solvent type) odor.
Odor Threshold: (ppm)	Not Determined
pH:	Not Applicable
Vapor Pressure: (Mm Hg)	Not Determined
Vapor Density: (Air = 1)	>4
Solubility In Water:	insoluble
Specific Gravity: (Water = 1)	1.3
Evaporation Rate: (Butyl Acetate = 1)	0.2
Boiling Point:	300-350
Viscosity:	Not Available
Bulk Density: (Pounds/Cubic Foot)(Pcf)	Not Applicable
% Volatiles (gr/L): (70°F) (21°C)	<25.0%

SECTION 10 - STABILITY AND REACTIVITY

Chemical Stability:	Stable
Conditions To Avoid:	Heat, Sparks, Open flames, Oxidizing materials, Strong oxidizers, Strong acids, Water, nitric acid, rubber and plastics.
Hazardous Polymerization:	Will not polymerize.
Hazardous Decomposition Products:	Carbon dioxide, Carbon monoxide, Sulfur oxides and Low molecular weight hydrocarbons.

SECTION 11 - TOXICOLOGICAL INFORMATION

Ingredient(No data unless listed.)	CAS Number	LD50 and LC50
1,2,4-Trimethylbenzene	000095-63-6	Inhalation LC50 Rat : 18 gm/m3/4H; Oral LD50 Rat : 5 gm/kg
Silica, amorphous, fumed, cryst.-free	112945-52-5	Oral LD50 Rat : 3160 mg/kg
Xylenes (o-, m-, p- isomers)	001330-20-7	Inhalation LC50 Rat : 5000 ppm/4H; Oral LD50 Rat : 4300 mg/kg;

Carcinogenicity:

Ingredient	IARC Group 1	IARC Group 2A	IARC Group 2B	NTP Known	NTP Suspect	OSHA
1,2,4-Trimethylbenzene	No	No	No	No	No	No
Cumene	No	No	No	No	No	No
Kaolin	No	No	No	No	No	No
Organophilic clay	No	No	No	No	No	No
Petroleum Asphalt	No	No	Yes	No	No	No
Silica, amorphous, fumed, cryst.-free	No	No	No	No	No	No
Solvent naphtha, petroleum, light arom.	No	No	No	No	No	No
Styrene-Butadiene block copolymer	No	No	No	No	No	No
Naphthenic Distillates	No	No	NO	NO	NO	NO

Animal tests indicate that prolonged and repeated skin contact with the asphalt in this product may produce local skin tumors.

Mutagenicity: Ethyl benzene contained in this product has produced mutagenic effects based on animal studies.

Teratogenicity: Not applicable.

Reproductive Toxicity: Not applicable.

SECTION 12 - ECOLOGICAL INFORMATION

Environmental Fate: No data available for product.

Ecotoxicity: No data available for product.

SECTION 13 - DISPOSAL CONSIDERATIONS

Waste Disposal Procedures: Consult all regulations (federal, state, provincial, local) or a qualified waste disposal firm when characterizing waste for disposal. Waste/rejected product consisting of unused liquid product in sealed containers is a EPA Hazardous Waste #D001 (due to its ignitability). Dispose of all waste at a disposal facility as permitted by applicable government regulations. Dried waste and waste absorbed in a noncombustible media would not be hazardous if no longer combustible.

In case of any spill or release, consult all applicable state and local regulations. Observing all precautions noted above, absorb spilled product with an inert noncombustible material and remove for disposal. Remove all sources of ignition. Do not use metal shovels or other tools, which could create sparks.

SECTION 14 - TRANSPORTATION INFORMATION

Proper Shipping Name: Not Applicable
UN/NA Number: Not Applicable
Domestic Hazard Class: Nonhazardous
Surface Freight Classification: Adhesives, Cement N.O.I
Label/Placard Required: Not Applicable

(Note: this transportation classification is for over the road shipments. Shipments by other modes need to be evaluated.

SECTION 15 - REGULATORY INFORMATION

REGULATORY CHEMICAL LISTS:

CERCLA (Comprehensive Response Compensation and Liability Act):
(None present unless listed below)

Chemical Name	CAS #	Wt %	CERCLA RQ
Cumene	000098-82-8	0.1 Max	final RQ = 5000 pounds (2270 kg)
Xylenes (o-, m-, p- isomers)	001330-20-7	0.3 Max	final RQ = 100 pounds (45.4 kg)

SARA Title III (Superfund Amendments and Reauthorization Act)

SARA Section 312/Tier I & II Hazard Categories:

Health Immediate (acute)	Yes
Health Delayed (chronic)	Yes
Flammable	Yes
Reactive	No
Pressure	No

302 Reportable Ingredients (Identification Threshold 1%.):

Chemical Name	CAS #	Wt %	SARA 302 TPQ

313 Reportable Ingredients (Chemicals present below reporting threshold are exempt):

Chemical Name	CAS #	Wt %
1,2,4-Trimethylbenzene	000095-63-6	0-16
Cumene	000098-82-8	0-0.1
Xylenes (o-, m-, p- isomers)	001330-20-7	0-0.3

National Volatile Organic Compound Emission Standards For Architectural Coatings:

Volatile Organic Content: (gr/L) 244 gr/L

WHMIS Classification(s): D2 B

This product has been classified in accordance with the hazard criteria of the Controlled Products Regulations (CPR). This MSDS contains all the information required by the CPR.

State Regulatory Information:

California Proposition 65: This product does not contain substances known to the state of California to cause cancer, birth defects or other reproductive harm.

Massachusetts Hazardous Substance List(Identification threshold 0.001%(1ppm)):

Chemical Name	CAS #	Wt %

New Jersey Hazardous Substance List(Identification threshold (0.1%)):

Chemical Name	CAS #	Wt %
1,2,4-Trimethylbenzene	000095-63-6	0-16
Cumene	000098-82-8	0-0.1
Xylenes (o-, m-, p- isomers)	001330-20-7	0-0.3

Pennsylvania Hazardous Substance List(Identification threshold 0.01%):

Chemical Name	CAS #	Wt %

CHEMICAL INVENTORY STATUS:

All chemicals in this product are listed or exempt from listing in the following countries:

US	CANADA		EUROPE	AUSTRALIA	JAPAN	KOREA	PHILIPPINES
TSCA	DSL	NDSL	EINECS/ELINCS	AICS	ENCS	ECL	PICCS
Yes	Yes	No	Yes	Not Determined	Not Determined	Yes	Yes

SECTION 16 - OTHER INFORMATION

Non-Hazardous Ingredient Disclosure:

Chemical Name	CAS Number

Prepared by: EH&S Department
Approved by: EH&S Department
Approved Date: 11/14/2005

Disclaimer: "The data included herein are presented in accordance with various environment, health and safety regulations. It is the responsibility of a recipient of the data to remain currently informed on chemical hazard information, to design and update its own program and to comply with all national, federal, state and local laws and regulations applicable to safety, occupational health, right-to-know and environmental protection."

VRH Construction Corp.

625 Eighth Avenue
2nd Flr, North Building
New York, NY 10018

Phone: 212-629-6187
Fax: 212-629-9243

SUBMITTAL NO. 03200-001
PACKAGE NO: 03200

TITLE: Epcon C6 Red Head
PROJECT: PANY/NJ-bt-200.200 WO 12

DRAWING:
STATUS: 3
BIC: PANYNJ

REQUIRED START: 5/26/2009
REQUIRED FINISH: 6/9/2009

DAYS HELD: 0
DAYS ELAPSED: 0
DAYS OVERDUE: -14

RECEIVED FROM		SENT TO		RETURNED BY		FORWARDED TO	
TG	JB	PANYNJ	KC	PANYNJ	KC	TG	JB

Revision No.	Description / Remarks	Received	Sent	Returned	Forwarded	Status	Sepias	Prints	Drawing Date	Held	Elapsed
000	Epcon C6 Red Head	5/26/2009	5/26/2009			3	0	8		0	0

Expedition®

RED HEAD
ADHESIVE ANCHORING SPECIALISTS

C6

Reliable Performance—Even Under the Most Severe Installation Conditions

C6-18

NEW!
Base Material Temperature 15°F
(cartridge temperature must be ≥ 70°F)

03200-001
200.200 W.O. 12

DESCRIPTION/SUGGESTED SPECIFICATIONS*

*Suggested Specifications see page 34

Fast Curing Epoxy for All Conditions

The hardener and resin are completely mixed as they are dispensed from the dual cartridge through a static mixing nozzle. The pre-mixed adhesive is injected directly into the anchor hole. C6 can be used with threaded rod or rebar (for fastening to hollow base materials, see pages 43 and 46).

ADVANTAGES

- 1 hour cure time (see below)
- Works in damp holes and underwater applications
- Minimum shrinkage—can be used in oversized holes and diamond cored holes
- High heat deflection temperature: 140°F (ASTM D648)
- One formula for both solid and hollow base materials
- NSF standard 61 certified for drinking water systems
- Extensively tested—earthquake, underwater, creep, freeze-thaw, radiation, fire, fatigue, electrical isolation, ozone and many more test programs have been conducted on C6
- Extensive use—C6 has been used on projects all over the world for almost 20 years

Easy to open, snap-off tip, no cutting required

Curing Times

MADE IN USA

BASE MATERIAL[1] (F°/C°)	WORKING TIME[2]	FULL CURE TIME
120°/49°	4 minutes	1 hour
110°/43°	4 minutes	1 hour
90°/32°	5 minutes	1 hour
80°/26°	6 minutes	1 hour
70°/21°	7 minutes	1 hour
60°/16°	7 minutes	2 hours
50°/10°	7 minutes	2 hours
40°/4°	7 minutes	24 hours
15°/-9°	6 minutes	24 hours

[1] Cartridge must be ≥ 70°F.

[2] Working time is max time from the end of mixing to when the insertion of the anchor into the adhesive shall be completed.

Gel Time per ASTM D2471 = 10 minutes at 72° F

EPCON DRIVE
RH7030 Cordless, battery powered dispensing tool for the C6-18 cartridge

C6

APPLICATIONS

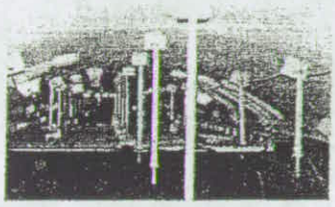

Tunnel Construction
Over 40,000 anchors were installed overhead in damp holes with water seeping through using C6 and our "dosage control" screens.

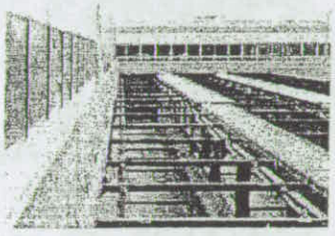

Water Treatment Plant
Skimmers and brackets with chain plates fastened with C6, which is **NSF approved** for potable drinking water systems.

Underwater Installations
C6 was used to install four 1-1/4" eye bolts underwater to lift this 37 ton block of concrete out of the ocean.

APPROVALS/LISTINGS

ICC Evaluation Service, Inc. – #ER4285

City of Los Angeles – RR#24975

City of Los Angeles – RR#24927

NSF Standard 61 Certified for Drinking Water Components

NSF Certified to ANSI/NSF 61

Meets ASTM C881-02; Type IV; Grade 3; Class A, B, and C; with the exception of gel time and tensile strength

DOT Approvals

INSTALLATION STEPS

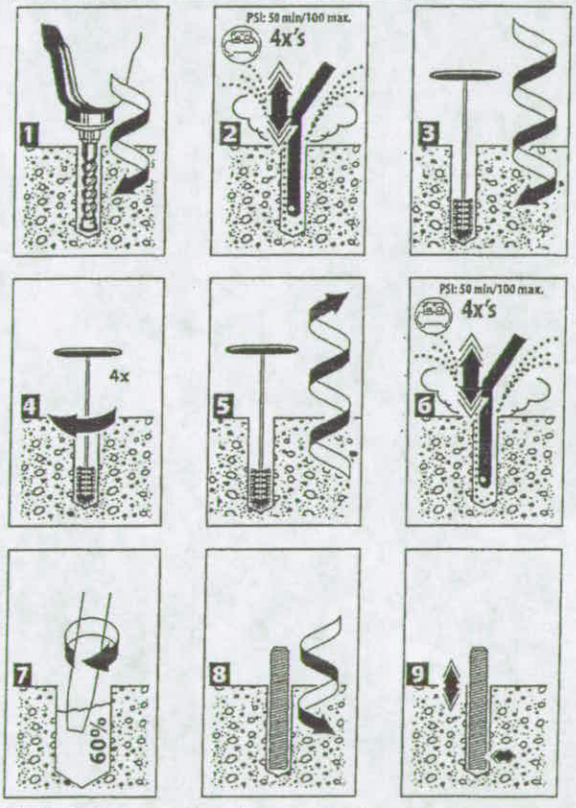

*For ICC-ES cleaning method, please go online to www.icc-es.org or www.itwredhead.com.

E200 Dispenser

FEATURES

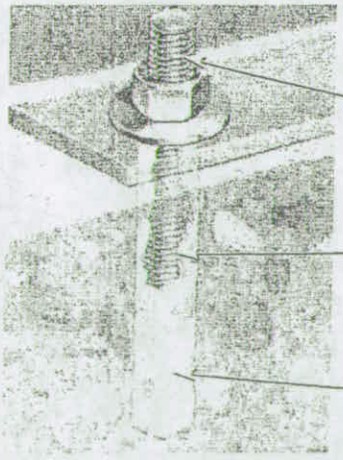

ANCHORAGE TO SOLID CONCRETE

- Threaded Rod (Carbon or Stainless Steel) or Rebar supplied by contractor; rod does not need to be chisel pointed
- C6 adhesive completely fills area between rod and hole creating a stress-free, high load anchorage
- Pre-drilled hole in concrete; see performance tables for suggested hole sizes

C6-18 fl. oz. Ordering Information

PART NUMBER	DESCRIPTION	CTN QTY
C6-18	C6 Adhesive, 18 Fl. Oz. Cartridge	6
E24XL	Mixing Nozzle for C6-18 Cartridge Nozzle diameter fits 9/16" holes (overall length of nozzle 10-3/8")	24
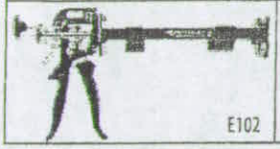 E102	Hand Dispenser for C6-18 Cartridges Dispenses both 18 oz. and 22 oz. Cartridges	1

PART NUMBER	DESCRIPTION	CTN QTY
RH7030	*EPCON DRIVE* Cordless, battery powered dispensing tool for the C6-18 Cartridge	1
E200	Pneumatic Dispenser for C6-18 Cartridge	1

Refer to page 49 for ordering information on brushes , hole plugs, and extension tubing for deep holes.

Plunger Repair Kit
Available for E102 Dispenser
Part No. E102RKIT

ESTIMATING TABLE

C6 18 Fluid Ounce Cartridge — Number of Anchoring Installations Per Cartridge* Using Reinforcing Bar with C6 Adhesive in Solid Concrete

REBAR	DRILL HOLE DIA. INCHES	EMBEDMENT DEPTH IN INCHES (mm)														
		1 (25.4)	2 (50.8)	3 (76.2)	4 (101.6)	5 (127.0)	6 (152.4)	7 (177.8)	8 (203.2)	9 (228.6)	10 (254.0)	11 (279.4)	12 (304.8)	13 (330.2)	14 (355.6)	15 (381.0)
#3	1/2	316.7	158.4	105.6	79.2	63.3	52.8	45.2	39.6	35.2	31.7	28.8	26.4	24.4	22.6	21.1
#4	5/8	239.3	119.6	79.8	59.8	47.9	39.9	34.2	29.9	26.6	23.9	21.8	19.9	18.4	17.1	16.0
#5	3/4	183.5	91.8	61.2	45.9	36.7	30.6	26.2	22.9	20.4	18.4	16.7	15.3	14.1	13.1	12.2
#6	7/8	148.2	74.1	49.4	37.0	29.6	24.7	21.2	18.5	16.5	14.8	13.5	12.3	11.4	10.6	9.9
#7	1-1/8	71.0	35.5	23.7	17.7	14.2	11.8	10.1	8.9	7.9	7.1	6.5	5.9	5.5	5.1	4.7
#8	1-1/4	63.2	31.6	21.1	15.8	12.6	10.5	9.0	7.9	7.0	6.3	5.7	5.3	4.9	4.5	4.2
#9	1-3/8	65.9	33.0	22.0	16.5	13.2	11.0	9.4	8.2	7.3	6.6	6.0	5.5	5.1	4.7	4.4
#10	1-1/2	53.9	27.0	18.0	13.5	10.8	9.0	7.7	6.7	6.0	5.4	4.9	4.5	4.1	3.9	3.6
#11	1-3/4	33.0	16.5	11.0	8.2	6.6	5.5	4.7	4.1	3.7	3.3	3.0	2.7	2.5	2.4	2.2

* The number of anchoring installations is based upon calculations of hole volumes using ANSI tolerance carbide tipped drill bits, the nominal areas of the reinforcing bars and the stress areas of the threaded rods. These estimates do not account for waste.
* Oversized holes acceptable but volume of adhesive will increase.

ESTIMATING TABLE

CLAMPING FORCE PROVIDED ON PAGE 34

C6 18 Fluid Ounce Cartridge — Number of Anchoring Installations Per Cartridge* Using Threaded Rod with C6 Adhesive in Solid Concrete

ROD In. (mm)	DRILL HOLE DIA. INCHES	EMBEDMENT DEPTH IN INCHES (mm)														
		1 (25.4)	2 (50.8)	3 (76.2)	4 (101.6)	5 (127.0)	6 (152.4)	7 (177.8)	8 (203.2)	9 (228.6)	10 (254.0)	11 (279.4)	12 (304.8)	13 (330.2)	14 (355.6)	15 (381.0)
1/4 (6.4)	5/16	587.3	293.7	195.8	146.8	117.5	97.9	83.9	73.4	65.3	58.7	53.4	48.9	45.2	42.0	39.2
3/8 (9.5)	7/16	340.0	170.0	113.3	85.0	68.0	56.7	48.6	42.5	37.8	34.0	30.9	28.3	26.2	24.3	22.7
1/2 (12.7)	9/16	244.7	122.4	81.6	61.2	48.9	40.8	35.0	30.6	27.2	24.5	22.2	20.4	18.8	17.5	16.3
5/8 (15.9)	3/4	125.2	62.6	41.7	31.3	25.0	20.9	17.9	15.7	13.9	12.5	11.4	10.4	9.6	8.9	8.3
3/4 (19.1)	7/8	99.1	49.5	33.0	24.8	19.8	16.5	14.2	12.4	11.0	9.9	9.0	8.3	7.6	7.1	6.6
7/8 (22.2)	1	82.0	41.0	27.4	20.5	16.4	13.7	11.7	10.3	9.1	8.2	7.5	6.8	6.3	5.9	5.5
1 (25.4)	1-1/8	67.6	33.8	22.5	16.9	13.5	11.3	9.7	8.4	7.5	6.8	6.1	5.6	5.2	4.8	4.5
1-1/4 (31.8)	1-3/8	51.2	25.6	17.0	12.8	10.2	8.5	7.3	6.4	5.7	5.1	4.6	4.3	3.9	3.7	3.4

* The number of anchoring installations is based upon calculations of hole volumes using ANSI tolerance carbide tipped drill bits, the nominal areas of the reinforcing bars and the stress areas of the threaded rods. These estimates do not account for waste.
* Oversized holes acceptable but volume of adhesive will increase.

PACKAGING

1. Disposable, self-contained cartridge system capable of dispensing both epoxy components in the proper mixing ratio
2. Epoxy components dispensed through a static mixing nozzle that thoroughly mixes the material, and places the epoxy at the base of the pre-drilled hole
3. Cartridge markings: include manufacturer's name, batch number and best-used-by date, mix ratio by volume, ANSI hazard classification, and appropriate ANSI handling precautions

SUGGESTED SPECIFICATIONS

EPOXY ADHESIVE:

1. Two component, 100% solid (containing no solvents), non-sag paste, insensitive to moisture, grey in color
2. Meets NSF Standard 61 for use in conjunction with drinking water systems
3. Meets ASTM C881-02; Type IV; Grade 3; Class A, B, and C; with the exception of gel time and tensile strength
4. Shrinkage during cure per ASTM D2566: .00051 in./in. maximum
5. Compressive strength, ASTM D695: 10,300 psi minimum
6. Shelf life: Best if used within 2 years
7. Water solubility: None
8. Heat deflection temperature, ASTM D648: 140°F minimum

PERFORMANCE TABLE

DRILL HOLE DIAMETERS PROVIDED ON PAGE 33

C6 Epoxy Adhesive — Average Ultimate Tension and Shear Loads[1,2,3] for Threaded Rod Installed in Solid Concrete

THREADED ROD DIA. In. (mm)	MAX. CLAMPING FORCE AFTER PROPER CURE Ft.-Lbs. (Nm)	EMBEDMENT IN CONCRETE In. (mm)	2000 PSI (13.8 MPa) CONCRETE		4000 PSI (27.6 MPa) CONCRETE		6000 PSI (41.4 MPa) CONCRETE	
			ULTIMATE TENSION Lbs. (kN)	ULTIMATE SHEAR Lbs. (kN)	ULTIMATE TENSION Lbs. (kN)	ULTIMATE SHEAR Lbs. (kN)	ULTIMATE TENSION Lbs. (kN)	ULTIMATE SHEAR Lbs. (kN)
3/8 (9.5)	13 - 18 (17.6-24.4)	3-3/8 (85.7)	7,195 (32.0)	5,209 (23.2)	8,445 (37.6)	5,869 (26.1)	10,621 (47.2)	5,941 (26.4)
		4-1/2 (114.3)	8,317 (37.0)	5,209 (23.2)	10,021 (44.6)	5,869 (26.1)	10,603 (47.2)	5,941 (26.4)
1/2 (12.7)	22 - 25 (29.8-33.9)	4-1/2 (114.3)	13,271 (59.0)	11,427 (50.8)	17,684 (78.7)	12,585 (56.0)	17,684 (78.7)	12,585 (56.0)
		6 (152.4)	19,127 (85.1)	11,427 (50.8)	19,608 (87.2)	12,585 (56.0)	19,608 (87.2)	12,585 (56.0)
5/8 (15.9)	55 - 80 (74.6-108.5)	5-5/8 (142.9)	17,704 (78.8)	18,294 (81.4)	24,526 (109.1)	19,802 (88.1)	24,526 (109.1)	19,802 (88.1)
		7-1/2 (190.5)	22,642 (100.7)	18,294 (81.4)	28,766 (128.0)	19,802 (88.1)	29,456 (131.0)	19,802 (88.1)
3/4 (19.1)	106-160 (143.7-216.9)	6-3/4 (171.5)	28,779 (128.0)	25,723 (114.4)	31,521 (140.2)	25,723 (114.4)	33,759 (150.2)	25,723 (114.4)
		9 (228.6)	31,758 (141.3)	25,723 (114.4)	41,384 (184.0)	25,723 (114.4)	41,384 (184.0)	25,723 (114.4)
7/8 (22.2)	185-250 (250.8-338.9)	7-7/8 (200.0)	35,257 (156.8)	– –	37,714 (167.8)	30,295 (134.8)	41,023 (182.5)	32,573 (144.9)
		10-1/2 (266.7)	– –	– –	51,211 (227.8)	30,295 (134.8)	51,211 (227.8)	32,573 (144.9)
1 (25.4)	276-330 (374.2-447.4)	9 (228.6)	40,334 (179.4)	38,519 (171.3)	47,886 (213.0)	40,341 (179.5)	47,886 (213.0)	46,416 (206.5)
		12 (304.8)	48,719 (216.7)	38,519 (171.3)	62,194 (276.7)	40,341 (179.5)	63,053 (280.5)	46,416 (206.5)
1-1/4 (31.8)	370-660 (501.6-894.8)	11-1/4 (285.8)	55,654 (247.6)	65,085 (289.5)	56,981 (253.5)	65,085 (289.5)	– –	65,085 (289.5)
		15 (381.0)	65,728 (289.5)	65,085 (289.5)	79,726 (354.7)	65,085 (289.5)	– –	65,085 (289.5)

1 Allowable working loads for the single installations under static loading should not exceed 25% capacity or the allowable load of the anchor rod.

2 Ultimate load values in 2000, 4000, and 6000 psi stone aggregate concrete. Ultimate loads are indicated for the embedment shown in the Embedment in Concrete column. Performance values are based on the use of high strength threaded rod (ASTM A193 Gr. B7). The use of lower strength rods will result in lower ultimate tension and shear loads.

3 Linear interpolation may be used for intermediate spacing and edge distances (see page 35).

PERFORMANCE TABLE

C6 Epoxy Adhesive — Average Ultimate Tension Loads[1,2,3] for Threaded Rod Installed in Solid Concrete, Shallow Embedment

ANCHOR DIAMETER In. (mm)	DRILL HOLE DIAMETER In. (mm)	EMBEDMENT IN CONCRETE In. (mm)	3500 PSI (24.2 MPa) ULTIMATE TENSION Lbs. (kN)
1/4 (6.4)	5/16 (7.9)	1 (25.4)	1,653 (7.4)
		2-1/4 (57.2)	2,818 (12.5)
		3 (76.2)	3,599 (16.0)
3/8 (9.5)	7/16 (11.1)	1-1/2 (38.1)	3,426 (15.2)
1/2 (12.7)	9/16 (14.3)	2 (50.8)	6,100 (27.1)
5/8 (15.9)	3/4 (19.1)	2-1/2 (63.5)	8,775 (39.0)
3/4 (19.1)	7/8 (22.2)	3 (76.2)	12,625 (56.2)
7/8 (22.2)	1 (25.4)	3-1/2 (88.9)	18,650 (83.0)
1 (25.4)	1-1/8 (28.6)	4 (101.6)	25,034 (111.4)
1-1/4 (31.8)	1-3/8 (34.9)	5 (127.0)	37,100 (165.0)

1 Allowable working loads for the single installations under static loading should not exceed 25% capacity or the allowable load of the anchor rod.

2 Ultimate load values in 2000, 4000, and 6000 psi stone aggregate concrete. Ultimate loads are indicated for the embedment shown in the Embedment in Concrete column. Performance values are based on the use of high strength threaded rod (ASTM A193 Gr. B7). The use of lower strength rods will result in lower ultimate tension and shear loads.

3 Linear interpolation may be used for intermediate spacing and edge distances (see page 35).

ITW Red Head
Call our toll free number 800-899-7890 or visit our web site for the most current product and technical information at www.itwredhead.com

PERFORMANCE TABLE

C6 Epoxy Adhesive — Average Ultimate Tension and Shear Loads[1,2,3] for Threaded Rod Installed in Grout Filled Concrete Block

THREADED ROD DIA. In. (mm)	DRILL HOLE DIAMETER In. (mm)	EMBEDMENT DEPTH In. (mm)	ANCHOR LOCATION	ULTIMATE TENSION Lbs. (kN)	ULTIMATE SHEAR Lbs. (kN)
3/8 (9.5)	7/16 (11.1)	3 (76.2)	GROUTED CELL	4,862 (21.6)	– –
1/2 (12.7)	5/8 (15.9)	3 (76.2)	GROUTED CELL	4,953 (22.0)	– –
1/2 (12.7)	5/8 (15.9)	6 (152.4)	GROUTED CELL	8,214 (36.5)	– –
5/8 (15.9)	3/4 (19.1)	5 (127.0)	GROUTED CELL	7,355 (32.7)	– –
3/4 (19.1)	7/8 (22.2)	6 (152.4)	Note 1	17,404 (77.4)	19,588 (87.1)
3/4 (19.1)	7/8 (22.2)	6 (152.4)	Note 2	17,404 (77.4)	8,668 (38.6)

1 Anchor can be located in grouted cell, "T" joint, or bed joint.

2 Anchor can be located in first grouted cell from edge.

3 Allowable working loads for the single installations under static loading should not exceed 25% (an industry standard) capacity or the allowable load of the anchor rod. Loads based upon testing with ASTM A193, Grade B7 rods.

PERFORMANCE TABLE DRILL HOLE DIAMETERS PROVIDED ON PAGE 33

C6 Epoxy Adhesive — Allowable Tension Loads[1,2,3] for Threaded Rod Installed in Solid Concrete

THREADED ROD DIA. In. (mm)	EMBEDMENT DEPTH In. (mm)	ALLOWABLE TENSION LOAD BASED ON ADHESIVE BOND STRENGTH			ALLOWABLE TENSION LOAD BASED ON STEEL STRENGTH		
		2000 PSI (13.8 MPa) CONCRETE Lbs. (kN)	4000 PSI (27.6 MPa) CONCRETE Lbs. (kN)	6000 PSI (41.4 MPa) IN CONCRETE Lbs. (kN)	ASTM A307 (SAE 1018) Lbs. (kN)	ASTM A193 GR. B7 (SAE 4140) Lbs. (kN)	ASTM F593 AISI 304 SS Lbs. (kN)
3/8 (9.5)	3-3/8 (85.7)	1,800 (8.0)	2,110 (9.4)	2,655 (11.8)	2,080 (9.3)	4,340 (19.3)	3,995 (17.8)
	4-1/2 (114.3)	2,080 (9.2)	2,505 (11.1)	2,655 (11.8)	2,080 (9.3)	4,340 (19.3)	3,995 (17.8)
1/2 (12.7)	4-1/2 (114.3)	3,315 (14.8)	4,420 (19.7)	4,420 (19.7)	3,730 (16.6)	7,780 (34.6)	7,155 (31.8)
	6 (152.4)	4,780 (21.3)	4,900 (21.8)	4,900 (21.8)	3,730 (16.6)	7,780 (34.6)	7,155 (31.8)
5/8 (15.9)	5-5/8 (142.9)	4,425 (19.7)	6,130 (27.3)	6,130 (27.3)	5,870 (26.1)	12,230 (54.4)	11,250 (50.0)
	7-1/2 (190.5)	5,660 (25.2)	7,190 (32.0)	7,364 (32.8)	5,870 (26.1)	12,230 (54.4)	11,250 (50.0)
3/4 (19.1)	6-3/4 (171.5)	7,195 (32.0)	7,885 (35.1)	8,440 (37.5)	8,490 (37.8)	17,690 (78.7)	14,860 (66.1)
	9 (228.6)	7,940 (35.3)	10,345 (46.0)	10,345 (46.0)	8,490 (37.8)	17,690 (78.7)	14,860 (66.1)
7/8 (22.2)	7-7/8 (200.0)	8,810 (39.2)	9,430 (41.9)	10,260 (45.6)	11,600 (51.6)	25,510 (113.5)	20,835 (92.7)
	10-1/2 (266.7)	-- --	12,080 (57.0)	12,805 (57.0)	11,600 (51.6)	25,510 (113.5)	20,835 (92.7)
1 (25.4)	9 (228.6)	10,085 (44.9)	11,970 (53.3)	11,970 (53.0)	15,180 (67.5)	31,620 (140.7)	26,560 (118.1)
	12 (304.8)	12,180 (54.2)	15,545 (69.2)	15,760 (70.1)	15,180 (67.5)	31,620 (140.7)	26,560 (118.1)
1-1/4 (31.8)	11-1/4 (285.8)	13,915 (61.9)	14,245 (63.4)	14,245 (63.4)	23,800 (105.9)	49,580 (220.6)	34,670 (154.2)
	15 (381.0)	16,340 (72.7)	19,930 (88.7)	19,930 (88.7)	23,800 (105.9)	49,580 (220.6)	34,670 (154.2)

1 Use lower value of either bond or steel strength for allowable tensile load.

2 Allowable loads taken from ICC Evaluation Report #4285 (formerly ICBO).

3 Linear interpolation may be used for intermediate spacing and edge distances (see below).

C6 Adhesive Anchoring System Edge/Spacing Distance Load Factor Summary[1,2]

LOAD FACTOR	DISTANCE FROM EDGE OF CONCRETE
Critical Edge Distance—Tension 100% Tension Load	1.25 x Anchor Embedment (or greater)
Minimum Edge Distance—Tension 70% Tension Load	0.50 x Anchor Embedment
Critical Edge Distance—Shear 100% Shear Load	1.25 x Anchor Embedment (or greater)
Minimum Edge Distance—Shear 30% Shear Load	0.30 x Anchor Embedment
LOAD FACTOR	**DISTANCE FROM ANOTHER ANCHOR**
Critical Spacing—Tension 100% Tension Load	1.50 x Anchor Embedment (or greater)
Minimum Spacing—Tension 75% Tension Load	0.75 x Anchor Embedment
Critical Spacing—Shear 100% Shear Load	1.50 x Anchor Embedment (or greater)
Minimum Spacing—Shear 30% Shear Load	0.50 x Anchor Embedment

1 Use linear interpolation for load factors at edge distances or spacing distances between critical and minimum.

2 Anchors are affected by multiple combination of spacing and/or edge distance loading and direction of the loading. Use the product of tension and shear loading factors in design.

PERFORMANCE TABLE — DRILL HOLE DIAMETERS PROVIDED ON PAGE 35

C6 Epoxy Adhesive — Allowable Shear Loads[1,2,3] for Threaded Rod Installed in Solid Concrete

THREADED ROD DIA. In. (mm)		MINIMUM EMBEDMENT DEPTH In. (mm)		ALLOWABLE SHEAR LOAD BASED ON CONCRETE STRENGTH						ALLOWABLE SHEAR LOAD BASED ON STEEL STRENGTH					
				2000 PSI (13.8 MPa) CONCRETE Lbs. (kN)		4000 PSI (27.6 MPa) CONCRETE Lbs. (kN)		6000 PSI (41.4 MPa) CONCRETE Lbs. (kN)		ASTM A307 (SAE 1018) Lbs. (kN)		ASTM A193 GR. B7 (SAE 4140) Lbs. (kN)		ASTM F593 AISI 304 SS Lbs. (kN)	
3/8	(9.5)	3-3/8	(85.7)	1,300	(5.8)	1,465	(6.5)	1,500	(6.7)	1,040	(4.6)	2,170	(9.7)	1,995	(8.9)
1/2	(12.7)	4-1/2	(114.3)	2,855	(12.7)	3,145	(14.0)	3,145	(14.0)	1,870	(8.3)	3,895	(17.3)	3,585	(15.9)
5/8	(15.9)	5-5/8	(142.9)	4,575	(20.3)	4,950	(22.0)	4,950	(22.0)	2,940	(13.1)	6,125	(27.2)	5,635	(25.1)
3/4	(19.1)	6-3/4	(171.5)	6,430	(28.6)	6,430	(28.6)	6,430	(28.6)	4,250	(18.9)	8,855	(39.4)	7,440	(33.1)
7/8	(22.2)	7-7/8	(200.0)	–	–	7,575	(33.7)	8,140	(36.2)	5,800	(25.8)	12,760	(56.8)	10,730	(47.7)
1	(25.4)	9	(228.6)	9,630	(42.8)	10,085	(44.9)	11,600	(51.6)	7,590	(33.8)	15,810	(70.3)	13,285	(59.1)
1-1/4	(31.8)	11-1/4	(285.8)	16,270	(72.4)	16,270	(72.4)	16,270	(72.4)	11,900	(52.9)	24,790	(110.3)	18,840	(83.8)

1 Use lower value of either concrete or steel strength for allowable shear load.
2 Allowable loads taken from ICC Evaluation Report #4285 (formerly ICBO).
3 Linear interpolation may be used for intermediate spacing and edge distances (see page 35).

PERFORMANCE TABLE — DRILL HOLE DIAMETERS PROVIDED ON PAGE 35

C6 Epoxy Adhesive — Average Ultimate Tension Loads[1,2,3] for Reinforcing Bar Installed in Solid Concrete

REINFORCING BAR In. (mm)		EMBEDMENT IN CONCRETE In. (mm)		2000 PSI (13.8 MPa) CONCRETE ULTIMATE TENSION Lbs. (kN)		4000 PSI (27.6 MPa) CONCRETE ULTIMATE TENSION Lbs. kN)		ULTIMATE TENSILE AND YIELD STRENGTH GRADE 60 REBAR			
								MINIMUM YIELD STRENGTH Lbs. (kN)		MINIMUM ULTIMATE TENSILE STRENGTH Lbs. (kN)	
# 3	(9.5)	3-3/8	(85.7)	7,020	(31.2)	9,200	(40.9)	6,600	(29.4)	9,900	(44.0)
		4-1/2	(114.3)	9,000	(40.1)	11,540	(51.3)	6,600	(29.4)	9,900	(44.0)
# 4	(12.7)	4-1/2	(114.3)	11,940	(53.1)	15,140	(67.3)	12,000	(53.4)	18,000	(80.1)
		6	(152.4)	16,703	(74.3)	18,880	(84.0)	12,000	(53.4)	18,000	(80.1)
# 5	(15.9)	5-5/8	(142.9)	14,120	(62.8)	27,740	(123.4)	18,600	(82.7)	27,900	(124.1)
		7-1/2	(190.5)	20,040	(89.1)	30,727	(136.7)	18,600	(82.7)	27,900	(124.1)
# 6	(19.1)	6-3/4	(171.5)	17,940	(79.8)	29,200	(129.9)	26,400	(117.4)	39,600	(176.2)
		9	(228.6)	25,520	(113.5)	41,640	(185.2)	26,400	(117.4)	39,600	(176.2)
		10	(254.0)	–	–	45,000	(200.2)	26,400	(117.4)	39,600	(176.2)
# 7	(22.2)	7-7/8	(200.0)	–	–	45,850	(204.0)	36,000	(160.1)	54,000	(240.2)
		10-1/2	(266.7)	–	–	60,375	(268.6)	36,000	(160.1)	54,000	(240.2)
		13	(330.2)	–	–	65,300	(290.5)	36,000	(160.1)	54,000	(240.2)
# 8	(25.4)	9	(228.6)	30,960	(137.7)	54,180	(241.1)	47,400	(210.9)	71,100	(316.3)
		12	(304.8)	30,960	(137.7)	65,420	(291.0)	47,400	(210.9)	71,100	(316.3)
		16	(406.4)	–	–	86,700	(385.7)	47,400	(210.9)	71,100	(316.3)
# 9	(28.6)	10-1/8	(257.2)	–	–	61,530	(273.7)	60,000	(266.9)	90,000	(400.4)
		13-1/2	(342.9)	–	–	81,240	(361.4)	60,000	(266.9)	90,000	(400.4)
		19	(482.6)	–	–	108,000	(480.4)	60,000	(266.9)	90,000	(400.4)
# 10	(31.8)	11-1/4	(285.8)	44,600	(198.4)	76,500	(340.3)	76,200	(339.0)	114,300	(508.5)
		15	(381.0)	49,220	(218.9)	82,320	(366.2)	76,200	(339.0)	114,300	(508.5)
		19	(482.6)	–	–	120,000	(533.8)	76,200	(339.0)	114,300	(508.5)

1 Allowable working loads for the single installations under static loading should not exceed 25% ultimate capacity or the allowable load of the anchor rod.
2 Ultimate load values in 2000 and 4000 psi stone aggregate concrete. Ultimate loads are indicated for the embedment shown in the Embedment in Concrete column. Performance values are based on minimum Grade 60 reinforcing bar. The use of lower strength rods will result in lower ultimate tension and shear loads.
3 SHEAR DATA: Provided the distance from the rebar to the edge of the concrete member exceeds 1.25 times the embedment depth of the rebar, calculate the ultimate shear load for the rebar anchorage as 60% of the ultimate tensile strength of the rebar.

Combined Tension and Shear Loading—for Adhesive Anchors

Allowable loads for anchors under tension and shear loading at the same time (combined loading) will be lower than the allowable loads for anchors subjected to 100% tension or 100% shear. Use the following equation to evaluate anchors in combined loading conditions:

$$\left(\frac{Na}{Ns}\right)^{5/3} + \left(\frac{Va}{Vs}\right)^{5/3} \leq 1$$

Na = Applied Service Tension Load
Ns = Allowable Tension Load
Va = Applied Service Shear Load
Vs = Allowable Shear Load

ITW Red Head
Call our toll free number 800-899-7890 or visit our web site for the most current product and technical information at www.itwredhead.com

RED HEAD
CONCRETE ANCHORING SYSTEMS

C6 MATERIAL SAFETY DATA SHEET

Product Name: C6 Epoxy Adhesive
Description: **Part A:** Epoxy Resin **Part B:** Amine/Mercaptan Polymer Mixture
Manufacturer: ITW Red Head · 2171 Executive Drive, Suite 100 · Addison, IL 60101
Emergency Number: 1-800-424-9300

Date prepared: July, 2007

Ingredients and Exposure Limits

Ingredients	CAS Number	TLV:	PEL:	STEL
Part A: Bisphenol A diglycidyl ether resin	25068386	NE	NE	NE
Part B: Isopropanol	67630	400 ppm	400 ppm	400 ppm
2,4,6 Tris(Dimethylaminomethyl) phenol	90722	NE	NE	NE
Mercaptan/Amine blend	*	NE	NE	NE

* An asterisk indicates a substance whose identity is a trade secret of our supplier

Abbreviations: TLV = ACGIH Threshold Limit Value PEL = OSHA Permissible Exposure STEL = Short Term Exposure Limit
NA = Not Applicable NE = None Established

Physical Properties

	Part A: Gray Paste	**Part B:** White Paste
Specific Gravity	= 1.30 g/cm³ (at 20° C).	= 1.70 g/cm³ (at 20° C)
Boiling Point	= > 500° F	NE
Water Solubility	None	None

Safe Handling Procedures

Handling and Storing Precautions: For professional use only. Keep away from children. Avoid eye/skin contact. Wash after using and before eating or smoking. Avoid breathing vapors. Use only as directed; avoid uncontrolled mixing with other materials, esp. polymerizable or combustible materials.

Storage: For maximum shelf life, store in a cool dry area between 40° F and 80° F. Do not store above 110° F.

Spill Procedures: Collect with an absorbent material and place in a container for proper disposal. For large spills, transfer to salvage vessels, and dispose of according to state, local and Federal regulations. Flush area with water to remove residue.

Personal Protection

Ventilation: Use in well ventilated areas.

Eye Protection: Wear safety glasses with side shields.

Skin Protection: Impermeable (neoprene or rubber) gloves are recommended.

Respiratory Protection: None required with normal ventilation. Where ventilation is inadequate to control vapors, use a NIOSH/OSHA approved respirator with organic vapor cartridges. Do not enter confined spaces without an appropriate air supplied respirator.

Health Information

Part A: Eye and skin irritant. Possible skin sensitizer. May be irritating to eyes, skin, nose and throat.

Part B: Corrosive. May cause eye and skin burns. Vapors may be irritating. May cause burns if swallowed.

Routes of Exposure: Contact. Inhalation.

Medical Conditions Aggravated by Exposure: Eye, skin and respiratory conditions.

Carcinogenicity: No ingredients are classified as carcinogens by IARC, NTP or OSHA

Hazard Categories: Immediate health hazard; delayed health hazard.

First Aid Measures

Eyes: Flush immediately with water for at least 15 minutes. Get immediate medical attention.

Skin: Wash immediately with soap and water. Launder contaminated clothing before reuse.

Inhalation: If symptoms occur, move to fresh air. Seek medical attention if symptoms persist.

Ingestion: Rinse mouth and then drink large quantities of water. Don't give anything by mouth to an unconscious person. Seek medical attention. Do not induce vomiting unless directed by a physician.

Other: Referral to a physician is recommended if there is any question about the seriousness of the exposure.

Stability and Reactivity

Stability: Stable

Hazardous Polymerization: Will not occur.

Incompatibility: Strong acids and oxidizing agents.

Decomposition Products: Thermal decomposition can yield COx, NOx, water and carbon.

Conditions to Avoid: Avoid elevated temperatures which may shorten the shelf-life of this product. Avoid open flame.

Fire and Explosion Hazard Information

Flash point: > 200° F Flammable Limits: Not applicable

Extinguishing Media: CO^2, Dry Chemical, Foam, and Water Spray.

Special Fire Fighting Procedures: Use self-contained breathing apparatus.

Unusual Fire and Explosion Hazards: Thermal decomposition products can be formed including carbon monoxide, sulfur and nitrogen oxide and other fumes and vapors. Material will not burn unless pre-heated. Do not enter confined space without full bunker gear. Firefighters should use self-contained breathing apparatus and protective clothing.

Federal Regulatory Status

Hazard Communication: This MSDS has been prepared in accordance with the federal OSHA Hazard Communication Standard 29 CFR 1910.1200.

HMIS Codes: Health 3, Flammability 1, Reactivity 1, PPE B

DOT Shipping Name: Consumer commodity, ORM-D

Proper Shipping Name: Corrosive liquid, basic, organic, N.O.S.

UN#: 3267

Hazard Class: 8 Corrosives

Emergency Response Guide #153

TSCA Inventory Status: Chemical components are listed on TSCA inventory or are exempt as impurities.

SARA Title III, Section 313: This product contains Isopropanol and Mercaptan/Amine blend which are subject to reporting under Section 313 or SARA Title III (40 CFR Part 372).

EPA Waste Code(s): Not regulated by EPA as a hazardous waste.

Waste Disposal Methods: If this material becomes a waste, it would not be hazardous waste by RCRA criteria (40CFR261). Dispose according to federal, state and local regulations.

Canadian Regulations: WHMIS hazard class: D2B.

Canadian EPA: All ingredients are listed on the DSL or are exempt as impurities.

The information and recommendations in this document are based on the best information available to us at the time of preparation. We make no other warranty, expressed or implied, as to its correctness or completeness, or as to the results or reliance of this document.

MSDS Revision

1) Revised proper shipping name, un number and prepared date on 1-27-04

VRH Construction Corp.

625 Eighth Avenue
2nd Flr, North Building
New York, NY 10018

Phone: 212-629-6187
Fax: 212-629-9243

SUBMITTAL NO. 03602-001
PACKAGE NO: 03602

TITLE: SikaGrout212
PROJECT: PANY/NJ-bt-200.200 WO 12
DRAWING:
STATUS: 3
BIC: PANYNJ

REQUIRED START: 5/26/2009
REQUIRED FINISH: 6/9/2009
DAYS HELD: 0
DAYS ELAPSED: 0
DAYS OVERDUE: -14

RECEIVED FROM		SENT TO		RETURNED BY		FORWARDED TO	
TG	JB	PANYNJ	KC	PANYNJ	KC	TG	JB

Revision No.	Description / Remarks	Received	Sent	Returned	Forwarded	Status	Sepias	Prints	Drawing Date	Held	Elapsed
000	SikaGrout 212	5/26/2009	5/26/2009			3	0	8		0	0

Product Data Sheet
Edition 6.2003
Identification no. 525-501
SikaGrout 212

03602-001
200.200 W.O. 12

SikaGrout® 212

High performance, cementitious grout

Description	SikaGrout 212 is a non-shrink, cementitious grout with a unique 2-stage shrinkage compensating mechanism. It is non-metallic and contains no chloride. With a special blend of shrinkage-reducing and plasticizing/water-reducing agents, SikaGrout 212 compensates for shrinkage in both the plastic and hardened states. A structural grout, SikaGrout 212 provides the advantage of multiple fluidity with a single component. SikaGrout 212 meets Corps of Engineers' Specification CRD C-621 and ASTM C-1107 (Grade C).
Where to Use	▪ Use for structural grouting of column base plates, machine base plates, anchor rods, bearing plates, etc. ▪ Use on grade, above and below grade, indoors and out. ▪ Multiple fluidity allows ease of placement: ram in place as a dry pack, trowel-apply as a medium flow, pour or pump as high flow.
Advantages	▪ Easy to use...just add water. ▪ Multiple fluidity with one material. ▪ Non-metallic, will not stain or rust. ▪ Low bleed. ▪ Low heat build-up. ▪ Excellent for pumping: Does not segregate...even at high flow. No build-up on equipment hopper. ▪ Non-corrosive, does not contain chlorides. ▪ Superior freeze/thaw resistance. ▪ Resistant to oil and water. ▪ Meets CRD C-621. ▪ Meets ASTM C-1107 (Grade C). ▪ Shows positive expansion when tested in accordance with ASTM C-827. ▪ SikaGrout 212 is USDA-approved.
Coverage	Approximately 0.44 cu. ft./bag at high flow.
Packaging	6 lb. pail, 6/case, 36/pallet; 50-lb. multi-wall bags; 36 bags/pallet.

Typical Data *(Material and curing conditions @ 73°F (23°C) and 50% R.H.)*

Shelf Life	One year in original, unopened bags.			
Storage Conditions	Store dry at 40°-95°F (4°-35°C). **Condition material to 65°-75°F before using.**			
Color	Concrete gray			
Flow Conditions		**Plastic[1]**	**Flowable[1]**	**Fluid[2]**
Typical Water Requirements:		6 pt.+	6.5 pt.	8.5 pt.
Set Time (ASTM C-266):	**Initial**	3.5-4.5 hr.	4.0-5.0 hr.	4.5-6.5 hr.
	Final	4.5-5.5 hr.	5.5-6.5 hr.	6.0-8.0 hr.
Tensile Splitting Strength, psi (ASTM C-496)				
28 day		600 (4.1 MPa)	575 (3.9 MPa)	500 (3.4 MPa)
Flexural Strength, psi (ASTM C-293)				
28 day		1,400 (9.6 MPa)	1,200 (8.2 MPa)	1,000 (6.8 MPa)
Bond Strength, psi (ASTM C-882 modified): Hardened concrete to plastic grout				
28 day		2,000 (13.7 MPa)	1,900(13.1 MPa)	1,900 (13.1 MPa)
Expansion % (CRD C-621)	**28 day**	+0.021%	+0.056%	+0.027%
Compressive Strength, psi (CRD C-621)				
1 day		4,500 (31.0 MPa)	3,500 (24.1 MPa)	2,700 (18.6 MPa)
7 day		6,100 (42.0 MPa)	5,700 (39.3 MPa)	5,500 (37.9 MPa)
28 day		7,500 (51.7 MPa)	6,200 (42.7 MPa)	5,800 (40.0 MPa)

[1]CRD C-227: 100-124% (plastic), 124-145% (flowable)
[2]CRD C-611: 10-30 sec efflux time.

How to Use

Surface Preparation

Remove all dirt, oil, grease, and other bond-inhibiting materials by mechanical means. Anchor bolts to be grouted must be de-greased with suitable solvent. Concrete must be sound and roughened to promote mechanical adhesion. Prior to pouring, surface should be brought to a saturated surface-dry condition.

Forming

For pourable grout, construct forms to retain grout without leakage. Forms should be lined or coated with bond-breaker for easy removal. Forms should be sufficiently high to accommodate head of grout. Where grout-tight form is difficult to achieve, use SikaGrout 212 in dry pack consistency.

Mixing

Mix manually or mechanically. Mechanically mix with low-speed drill (400-600 rpm) and Sika mixing paddle or in appropriately sized mortar mixer.

Product Extension: For deeper applications, SikaGrout 212 (plastic and flowable consistencies only) may be extended with 25 lbs. of 3/8" pea gravel. The aggregate must be non-reactive, clean, well-graded, saturated surface dry, have low absorption and high density, and comply with ASTM C33 size number 8 per Table 2. Add the pea gravel after the water and SikaGrout 212.

Mixing Procedure

Make sure all forming, mixing, placing, and clean-up materials are on hand. Add appropriate quantity of clean water to achieve desired flow. Add bag of powder to mixing vessel. Mix to a uniform consistency, minimum of 2 minutes. Ambient and material temperature should be as close as possible to 70°F If higher, use cold water; if colder, use warm water.

Application

Within 15 minutes after mixing, place grout into forms in normal manner to avoid air entrapment. Vibrate, pump, or ram grout as necessary to achieve flow or compaction. SikaGrout 212 must be confined in either the horizontal or vertical direction leaving minimum exposed surface. After grout has achieved final set, remove forms, trim or shape exposed grout shoulders to designed profile. SikaGrout 212 is an excellent grout for pumping, even at high flow. For pump recommendations, contact Technical Service. Wet cure for a minimum of 3 days or apply a curing compound which complies with ASTM C-309 on exposed surfaces.

Limitations

- Minimum ambient and substrate temperature 45°F and rising at time of application.
- Minimum application thickness: 1/2 in.
- Maximum application thickness (neat): 2 in. Deeper applications are possible, please contact Sika's technical services department.
- Do not use as a patching or overlay mortar or in unconfined areas.
- Material must be placed within 15 minutes of mixing.
- As with all cement based materials, avoid contact with aluminum to prevent adverse chemical reaction and possible product failure. Insulate potential areas of contact by coating aluminum bars, rails, posts etc. with an appropriate epoxy such as Sikadur Hi-Mod 32.

Caution

Irritant

Suspect carcinogen - contains portland cement and crystalline silica. Skin and eye irritant. Avoid breathing dust. Use only with adequate ventilation. May cause delayed lung injury (silicosis). IARC lists crystalline silica as having sufficient evidence of carcinogenicity in laboratory animals and limited evidence of carcinogenicity in humans. NTP also lists crystalline silica as a suspect carcinogen. Use of safety goggles and chemical resistant gloves is recommended. In case of high dust concentrations or exceedance of PELs, use an appropriate NIOSH approved respirator. Remove contaminated clothing.

First Aid

In case of skin contact, wash thoroughly with soap and water. For eye contact, flush immediately with plenty of water for at least 15 minutes; contact physician immediately. Wash clothing before re-use.

Clean Up

In case of spillage, ventilate area of spill, confine spill, vacuum or scoop into appropriate container. Dispose of in accordance with current applicable local, state and federal regulations. Uncured material can be removed with water. Cured material can only be removed mechanically.

KEEP CONTAINER TIGHTLY CLOSED
NOT FOR INTERNAL CONSUMPTION
KEEP OUT OF REACH OF CHILDREN
FOR INDUSTRIAL USE ONLY
CONSULT MATERIAL SAFETY DATA SHEET FOR MORE INFORMATION

Sika warrants this product for one year from date of installation to be free from manufacturing defects and to meet the technical properties on the current technical data sheet if used as directed within shelf life. User determines suitability of product for intended use and assumes all risks. Buyer's sole remedy shall be limited to the purchase price or replacement of product exclusive of labor or cost of labor.

NO OTHER WARRANTIES EXPRESS OR IMPLIED SHALL APPLY INCLUDING ANY WARRANTY OF MERCHANTABILITY OR FITNESS FOR A PARTICULAR PURPOSE. SIKA SHALL NOT BE LIABLE UNDER ANY LEGAL THEORY FOR SPECIAL OR CONSEQUENTIAL DAMAGES.

Visit our website at www.sikausa.com 1-800-933-SIKA NATIONWIDE

Regional Information and Sales Centers. For the location of your nearest Sika sales office, contact your regional center.

Sika Corporation
201 Polito Avenue
Lyndhurst, NJ 07071
Phone: 800-933-7452
Fax: 201-933-6225

Sika Canada Inc.
601 Delmar Avenue
Pointe Claire
Quebec H9R 4A9
Phone: 514-697-2610
Fax: 514-694-2792

Sika Mexicana S.A. de C.V.
Carretera Libre Celaya Km. 8.5
Corregidora, Queretaro
C.P. 76920 A.P. 136
Phone: 52 42 25 0122
Fax: 52 42 25 0537

QUALITY ISO 9001 9002 ACHIEVEMENT

Sika and SikaGrout are registered trademarks. Made in USA. Printed in USA.

MATERIAL SAFETY DATA SHEET

Sika Grout 212

HMIS	
HEALTH	*2
FLAMMABILITY	0
REACTIVITY	0
PERSONAL PROTECTION	E

1. Product And Company Identification

Supplier
Sika Corporation
201 Polito Ave
Lyndhurst, NJ 07071

Company Contact: EHS Department
Telephone Number: 201-933-8800
FAX Number: 201-933-9379
Web Site: www.sikausa.com

Manufacturer
Sika Corporation
201 Polito Ave
Lyndhurst, NJ 07071

Company Contact: EHS Department
Telephone Number: 201-933-8800
FAX Number: 201-933-9379
Web Site: www.sikausa.com

Supplier Emergency Contacts & Phone Number
CHEMTREC: 800-424-9300
INTERNATIONAL: 703-527-3887

Manufacturer Emergency Contacts & Phone Number
CHEMTREC: 800-424-9300
INTERNATIONAL: 703-527-3887

Issue Date: 10/27/2005

Product Name: Sika Grout 212
CAS Number: Not Established
Chemical Family: Cementitious Grout
MSDS Number: 3757
Product Code: 0525540

2. Composition/Information On Ingredients

Ingredient Name	CAS Number		Percent Of Total Weight
CEMENT, PORTLAND	65997-15-1		
SILICA, QUARTZ	14808-60-7		

3. Hazards Identification

Eye Hazards
May cause eye irritation.

Skin Hazards
Product becomes alkaline when exposed to moisture. May cause a reversible inflammatory effect on skin or tissue at the site of contact.

Ingestion Hazards
May be harmful if swallowed.

MATERIAL SAFETY DATA SHEET

Sika Grout 212

3. Hazards Identification - Continued

Inhalation Hazards

Breathing dust may cause nose, throat or lung irritation. Respirable crystalline silica can cause silicosis, a fibrosis (scarring) of the lungs. Silicosis may be progressive.

4. First Aid Measures

Eye

In case of contact, hold eyelids apart and immediately flush eyes with plenty of tepid water for at least 15 minutes. Get medical attention immediately if irritation develops and persists.

Skin

In case of contact, immediately flush skin with soap and plenty of tepid water for at least 15 minutes. Get medical attention immediately if irritation (redness, rash, blistering) develops and persists.

Ingestion

If swallowed, do not induce vomiting unless directed to do so by medical personnel. If victim is fully conscious, give one or two cups of water or milk to drink. Seek medical attention immediately.

Inhalation

Remove to fresh air. If not breathing, give artificial respiration, seek medical attention.

5. Fire Fighting Measures

Flash Point: >200 °F
Autoignition Point: N/AV °F

Fire And Explosion Hazards

None known

Extinguishing Media

In case of fire, use water spray (fog) foam, dry chemical, or CO2.

Fire Fighting Instructions

In the event of a fire, firefighters should wear full protective clothing and NIOSH-approved self-contained breathing apparatus with a full facepiece operated in the pressure demand or other positive pressure mode.

6. Accidental Release Measures

Avoid release to the environment. Use appropriate Personal Protective Equipment (PPE). Shovel or sweep up material into suitable containers, taking care to minimize dust. Dampen if necessary to control dust. Vacuum clean dust with equipment fitted with High Efficiency Particulate Air (HEPA) filters.

7. Handling And Storage

Handling And Storage Precautions

Keep containers tightly closed.

Work/Hygienic Practices

Wash thoroughly with soap and water after handling.

8. Exposure Controls/Personal Protection

Engineering Controls

Use of a system of local and/or general exhaust is recommended to keep employee below applicable expsoure limits. Refer to the current edition of "Industrial Ventilation: A Manual of Recommended Practice" published by the American Conference of Governmental Industrial Hygienists for information on the design, installation, use, and maintenance of exhaust systems.

8. Exposure Controls/Personal Protection - Continued

Eye/Face Protection
Safety glasses with side shields or goggles.

Skin Protection
Lab coat or other work clothing to prevent skin exposure (Long sleeve shirt and long pants). Launder before reuse.

Respiratory Protection
A respirator protection program that meets 29 CFR 1910.134 requirement must be followed whenever workplace conditions warrant a respirator's use. In areas where the Permissible Expsosure Limits are exceeded, use a properly fitted NIOSH-approved respirator.

Ingredient(s) - Exposure Limits
CEMENT, PORTLAND
ACGIH TLV-TWA - 10 mg/m3
OSHA PEL -TWA - 15 mg/m3 (total dust)
OSHA PEL - TWA - 5 mg/m3 (respirable dust)
SILICA, QUARTZ
ACGIH TLV-TWA 0.05 mg/m3
OSHA PEL-TWA 30/%SiO2+2 mg/m3
OSHA PEL-TWA 10/%SiO2+2 mg/m3
OSHA PEL-TWA 250/%SiO+5 mppcf

9. Physical And Chemical Properties

Appearance
Gray Powder

Odor
Product is odorless. Faint ammonia like smell may be present during curing.

Chemical Type: Mixture
Physical State: Solid
Melting Point: N/AV °F
Boiling Point: N/AV °F
Specific Gravity: 2.7-3.0
Percent Volatiles: N/AV
Percent VOCs: 0%
Packing Density: N/AV
Vapor Pressure: N/AV
Vapor Density: N/AV
Solubility: Negligible

10. Stability And Reactivity

Stability: Stable
Hazardous Polymerization: Will not occur

Conditions To Avoid (Stability)
Contact of silica with powerful oxidizing agents such as fluorine, chlorine, trifluoride, manganese trixoide, oxygen difluoride, may cause fires. Upon direct contact with water, material will harden.

Incompatible Materials
None Known

MATERIAL SAFETY DATA SHEET

Sika Grout 212

10. Stability And Reactivity - Continued

Hazardous Decomposition Products
Silica will dissolve in hydroflouric acid and produce a corrosive gas - silicon tetraflouride.

11. Toxicological Information

Ingredient(s) - Carginogenicity
SILICA, QUARTZ
NTP - Listed On The National Toxicology Program
Listed In The IARC Monographs

12. Ecological Information

No Data Available...

13. Disposal Considerations

Dispose in accordance with applicable federal, state and local government regulations. Waste generators must determine whether a discarded material is classified as a hazardous waste. USEPA guidelines for the classification determination are listed in 40 CFR Parts 261.3. Additionally, waste generators must consult state and local hazardous waste regulations to ensure complete and accurate classification.

14. Transport Information

Proper Shipping Name
Not regulated by the USDOT.

15. Regulatory Information

U.S. Regulatory Information
All ingredients of this product are listed or are excluded from listing under the U.S. Toxic Substances Control Act (TSCA) Chemical Substance Inventory.

SARA Hazard Classes
Acute Health Hazard
Chronic Health Hazard

SARA Section 313 Notification
This product does not contain any ingredients regulated under Section 313 of the Emergency Planning and Community Right-To-Know Act of 1986 or 40 CFR 372.

State Regulations
WARNING: This product contains a chemical known to the State of California to cause cancer, birth defects, or other reproductive harm.

Ingredient(s) - State Regulations
SILICA, QUARTZ
New Jersey - Workplace Hazard
Pennsylvania - Workplace Hazard
California - Proposition 65
Massachusetts - Hazardous Substance

16. Other Information

HMIS Rating
Health: *2
Fire: 0
Reactivity: 0

16. Other Information - Continued

HMIS Rating - Continued
PPE: E

Revision/Preparer Information
MSDS Preparer: EHS Department
MSDS Preparer Phone Number: 201-933-8800
This MSDS Supercedes A Previous MSDS Dated: 05/12/2004

Disclaimer

The data in this Material Safety Data Sheet relates only to the specific material herein and does not relate to use in combination with any other material or in any process. The information set forth herein is based on technical data that Sika believes to be reliable as of the date hereof. Since conditions of use are outside our control, we make no warranties, express or implied and assume no liability in connection with any use of this information. Nothing herein is to be taken as a license to operate under or a recommendation to infringe any patents.

SIKA CORPORATION

Printed Using MSDS Generator™ 2000

VRH Construction Corp.

625 Eighth Avenue
2nd Flr, North Building
New York, NY 10018

Phone: 212-629-6187
Fax: 212-629-9243

SUBMITTAL NO. 03602-002
PACKAGE NO: 03602

TITLE: Sika Mono Top 611
PROJECT: PANY/NJ-bt-200.200 WO 12
DRAWING:
STATUS: 3
BIC: PANYNJ

REQUIRED START: 5/26/2009
REQUIRED FINISH: 6/9/2009
DAYS HELD: 0
DAYS ELAPSED: 0
DAYS OVERDUE: -14

RECEIVED FROM		SENT TO		RETURNED BY		FORWARDED TO	
TG	JB	PANYNJ	KC	PANYNJ	KC	TG	JB

Revision No.	Description / Remarks	Received	Sent	Returned	Forwarded	Status	Sepias	Prints	Drawing Date	Held	Elapsed
000	Sika Mono Top 611	5/26/2009	5/26/2009			3	0	8		0	0

Product Data Sheet
Edition 6.2003
Identification no. 18M-500
Sika MonoTop 611

03602-002
200.200 W.O. 12

Sika MonoTop® 611

One-component, polymer-modified, silica fume enhanced, cementitious pump and pour mortar

Description	Sika MonoTop 611 is a 1-component silica fume-enhanced, polymer-modified, portland-cement, mortar.
Where to Use	▪ On grade, above, and below grade on concrete and mortar. ▪ On horizontal, vertical and overhead surfaces. ▪ As a structural repair material for parking facilities, industrial plants, walkways, bridges, tunnels, and dams. ▪ Free-flowing repair mortar for hard-to-reach areas. ▪ Filler for voids and cavities. ▪ Leveling mortar.
Advantages	▪ Superior abrasion resistance over conventional portland cement mortar. ▪ High bond strength. ▪ Compatible with coefficient of thermal expansion of concrete. ▪ Increased resistance to deicing salts. ▪ High early strengths. ▪ Simple-to-use labor-saving system. ▪ Easily mixed. ▪ High compressive and flexural strengths. ▪ Good freeze/thaw resistance. ▪ Easily applied to clean, sound substrate. ▪ Not a vapor barrier. ▪ Not flammable, non-toxic.
Yield	Approximately 0.42 cu. ft./unit. Approximately 0.67 cu. ft./unit (50 lbs. of MT 611+42 lbs. 3/8" pea gravel)
Packaging	50-lb. multi-wall bag.

Typical Data *(Material and curing conditions @ 73°F (23°C) and 50% R.H.)*

Shelf Life	1 year in original, unopened packaging.
Storage Conditions	Store dry at 40°-95°F (4°-35°C). **Condition material to 65°-75°F before using.**
Color	Concrete gray when mixed.
Mixing Ratio	Mix with clean potable water at rate of 1 gallon per bag. Start with 4/5 gallon and temper slowly to consistency required with remainder of gallon.
Application Time	Approximately 30 min. after mixing with water. Mortar remains plastic for a longer period, but will have less adhesion after this period of time. Application time is dependent on temperature and relative humidity.

Flexural Strength (ASTM C-293) **28 days** 720 psi (5.0 MPa)

Splitting Tensile Strength (ASTM C-496) **28 days** 500 psi (3.4 MPa)

Bond Strength* (ASTM C-882 modified) **28 days** 2,200 psi (15.2 MPa)

Compressive Strength (ASTM C-109)

1 day	3,000 psi (20.7 MPa)
7 days	5,500 psi (37.9 MPa)
28 days	6,500 psi (44.8 MPa)

Chloride ion permeability (AASHTO T-277) < 600 coloumbs

* Mortar scrubbed into substrate.

How to Use

Substrate

Concrete, mortar, and masonry products

Surface Preparation

Concrete/Mortar: Remove all deteriorated concrete, dirt, oil, grease, and all bond-inhibiting materials from surface. Be sure repair area is not less than 1/2 inch in depth. Preparation work should be done by high pressure water blast, scabbler, or other appropriate mechanical means to obtain an exposed aggregate surface with a minimum surface profile of ±1/16 in. (CSP-5). Saturate surface with clean water. Substrate should be saturated surface dry (SSD) with no standing water during application.
Reinforcing Steel: Steel reinforcement should be thoroughly prepared by mechanical cleaning to remove all traces of rust. Where corrosion has occurred due to the presence of chlorides, the steel should be high-pressure washed with clean water after mechanical cleaning. For priming of reinforcing steel use Sika Armatec 110 EpoCem (consult Technical Data Sheet).

Priming

For priming of reinforcing steel use Sika Armatec 110 EpoCem (consult Technical Data Sheet).

Mixing

Sika MonoTop mortar: Place 4/5 of 1 gallon water in mixing container. Add Sika MonoTop while continuing to mix. Add additional water up to 1 gallon total. Mix to a uniform consistency, maximum 3 minutes. Mechanically mix with a low-speed drill (400-600 rpm) and paddle or in appropriate-size mortar mixer.
Sika MonoTop concrete: For applications greater than 1 inch in depth, add 3/8-inch coarse aggregate (42-lb./unit) to Sika MonoTop to produce Sika MonoTop concrete. Trial mix designs should be conducted to simulate job conditions. The aggregate must be non-reactive (reference ASTMC1260, C227 and C289), clean, well-graded, saturated surface dry, have low absorption, high density, and comply with ASTM C33 size number 8 per Table 2. Mix as above. Introduce aggregate at desired quantity. Mix to uniform consistency, maximum 3 minutes.

Application & Finish

Form and pour or pump applications; Pre-wet surface to SSD. Vibrate form while pouring or pumping. Pump with a variable pressure pump. Continue pumping until a 3 to 5 psi increase in normal line pressure is evident then STOP pumping. Form should not deflect. Vent to be capped when steady flow is evident, and forms stripped when appropriate.

Curing

As per ACI recommendations for portland cement concrete, curing is required. Moist cure with wet burlap and polyethylene, a fine mist of water or a water based* compatible curing compound. Curing compounds adversely affect the adhesion of following layers of mortar, leveling mortar or protective coatings. Moist curing should commence immediately after finishing. Protect newly applied material from direct sunlight, wind, rain and frost.
*Pretesting of curing compound is recommended.

Limitations

- **Application thickness:**

	Minimum	Maximum
Neat	1/2 inch (13 mm)	1 inch (25 mm)
Extended	1 inch (25 mm)	6 inches (150 mm)

- Minimum ambient and surface temperatures 45°F (7°C) and rising at time of application.
- Addition of coarse aggregates may result in variations of the physical properties of the mortar.
- Do not use a solvent-based curing compound.
- Product is not designed for unconfined placements or overlays (use SikaTop 111 *PLUS*).
- As with all cement based materials, avoid contact with aluminum to prevent adverse chemical reaction and possible product failure. Insulate potential areas of contact by coating aluminum bars, rails, posts etc. with an appropriate epoxy such as Sikadur HI-Mod 32.

Caution

Irritant

Suspect carcinogen - Contains portland cement and sand (crystalline silica). Skin and eye irritant. Avoid contact. Dust may cause respiratory tract irritation. Avoid breathing dust. Use only with adequate ventilation. May cause delayed lung injury (silicosis). IARC lists crystalline silica as having sufficient evidence of carcinogenicity in laboratory animals and limited evidence of carcinogenicity in humans. NTP also lists crystalline silica as a suspect carcinogen. Use of safety goggles and chemical resistant gloves is recommended. If PELs are exceeded, an appropriate, NIOSH approved respirator is required. Remove contaminated clothing.

First Aid

In case of skin contact, wash thoroughly with soap and water. For eye contact, flush immediately with plenty of water for at least 15 minutes, and contact a physician. For respiratory problems, remove person to fresh air.

Clean Up

In case of spillage, scoop or vacuum into appropriate container, and dispose of in accordance with current, applicable local, state and federal regulations. Keep container tightly closed and in an upright position to prevent spillage and leakage.
Mixed components: Uncured material can be removed with water. Cured material can only be removed mechanically.

KEEP CONTAINER TIGHTLY CLOSED
NOT FOR INTERNAL CONSUMPTION
KEEP OUT OF REACH OF CHILDREN
FOR INDUSTRIAL USE ONLY
CONSULT MATERIAL SAFETY DATA SHEET FOR MORE INFORMATION

Sika warrants this product for one year from date of installation to be free from manufacturing defects and to meet the technical properties on the current technical data sheet if used as directed within shelf life. User determines suitability of product for intended use and assumes all risks. Buyer's sole remedy shall be limited to the purchase price or replacement of product exclusive of labor or cost of labor.

NO OTHER WARRANTIES EXPRESS OR IMPLIED SHALL APPLY INCLUDING ANY WARRANTY OF MERCHANTABILITY OR FITNESS FOR A PARTICULAR PURPOSE. SIKA SHALL NOT BE LIABLE UNDER ANY LEGAL THEORY FOR SPECIAL OR CONSEQUENTIAL DAMAGES.

1-800-933-SIKA NATIONWIDE
Visit our website at www.sikausa.com
Regional Information and Sales Centers. For the location of your nearest Sika sales office, contact your regional center.

Sika Corporation
201 Polito Avenue
Lyndhurst, NJ 07071
Phone: 800-933-7452
Fax: 201-933-6225

Sika Canada Inc.
601 Delmar Avenue
Pointe Claire
Quebec H9R 4A9
Phone: 514-697-2610
Fax: 514-694-2792

Sika Mexicana S.A. de C.V.
Carretera Libre Celaya Km. 8.5
Corregidora, Queretaro
C.P. 76920 A.P. 136
Phone: 52 42 25 0122
Fax: 52 42 25 0537

QUALITY ISO 9001 9002 ACHIEVEMENT
Quality Certification Numbers: Lyndhurst: FM 59711 (ISO 9000), FM 70421 (QS 9000), Marion: FM 59715, Kansas City: FM 59107, Santa Fe Springs: FM 59408

Sika and MonoTop are registered trademarks. Made in USA. Printed in USA.

MATERIAL SAFETY DATA SHEET

Sika Monotop 611

HMIS	
HEALTH	*2
FLAMMABILITY	0
REACTIVITY	0
PERSONAL PROTECTION	E

1. Product And Company Identification

Supplier
Sika Corporation
201 Polito Ave
Lyndhurst, NJ 07071

Company Contact: EHS Department
Telephone Number: 201-933-8800
FAX Number: 201-933-9379
Web Site: www.sikausa.com

Manufacturer
Sika Corporation
201 Polito Ave
Lyndhurst, NJ 07071

Company Contact: EHS Department
Telephone Number: 201-933-8800
FAX Number: 201-933-9379
Web Site: www.sikausa.com

Supplier Emergency Contacts & Phone Number
CHEMTREC: 800-424-9300
INTERNATIONAL: 703-527-3887

Manufacturer Emergency Contacts & Phone Number
CHEMTREC: 800-424-9300
INTERNATIONAL: 703-527-3887

Issue Date: 08/20/2004

Product Name: Sika Monotop 611
Chemical Family: Cementitious Mortar
MSDS Number: 3318
Product Code: 018M-540

2. Composition/Information On Ingredients

Ingredient Name	CAS Number		Percent Of Total Weight
CEMENT, PORTLAND	65997-15-1		
SILICA, AMORPHOUS FUSED	60676-86-0		
SILICA, QUARTZ	14808-60-7		

3. Hazards Identification

Eye Hazards
May cause eye irritation.

Skin Hazards
May causes skin irritation. Product becomes alkaline when exposed to moisture. May cause a reversible inflammatory effect on skin or tissue at the site of contact.

Ingestion Hazards
May be harmful if swallowed.

Inhalation Hazards
May cause respiratory tract irritation. Breathing dust may cause nose, throat or lung irritation. Respirable crystalline silica can cause silicosis, a fibrosis (scarring) of the lungs. Silicosis may be progressive.

Sika Monotop 611

3. Hazards Identification - Continued

Chronic/Carcinogenicity Effects

Contains Silica Quartz. Inhalation of quartz is classified as a human carcinogen. Chronic overexposure can cause silicosis, a form of lung scarring that can cause shortness of breath, reduced lung function, and insevere cases, death.

4. First Aid Measures

Eye

In case of contact, hold eyelids apart and immediately flush eyes with plenty of tepid water for at least 15 minutes. Get medical attention immediately if irritation develops and persists.

Skin

In case of contact, immediately flush skin with soap and plenty of tepid water for at least 15 minutes. Get medical attention immediately if irritation (redness, rash, blistering) develops and persists.

Ingestion

If swallowed, do not induce vomiting unless directed to do so by medical personnel.

Inhalation

Remove to fresh air. If not breathing, give artificial respiration, seek medical attention.

5. Fire Fighting Measures

Flash Point: N/A °F
Autoignition Point: N/AV °F
Lower Explosive Limit: N/AV
Upper Explosive Limit: N/AV

Fire And Explosion Hazards

None Known

Extinguishing Media

Use the appropriate extinguishing media for the surrounding fire.

Fire Fighting Instructions

In the event of a fire, firefighters should wear full protective clothing and NIOSH-approved self-contained breathing apparatus with a full facepiece operated in the pressure demand or other positive pressure mode.

6. Accidental Release Measures

Avoid release to the environment. Using appropriate personal protective equipment (PPE), shovel material into waste containers taking care to minimize dust. Dampen if necessary to control dust. Vacuum clean dust with equipment fitted with High Efficiency Particulate Air (HEPA) filters.

7. Handling And Storage

Handling And Storage Precautions

Keep out of reach of children. Store in a cool, dry, well ventilated area. Keep containers tightly closed.

Work/Hygienic Practices

Wash thoroughly with soap and water after handling.

8. Exposure Controls/Personal Protection

Engineering Controls

Use of a system of local and/or general exhaust is recommended to keep employee below applicable expsoure limits. Refer to the current edition of "Industrial Ventilation: A Manual of Recommended Practice" published by the American Conference of Governmental Industrial Hygienists for information on the design, installation, use, and maintenance of exhaust systems.

Sika Monotop 611

8. Exposure Controls/Personal Protection - Continued

Eye/Face Protection
Safety glasses with side shields or goggles.

Skin Protection
Avoid skin contact. Long sleeve shirt, long pants, chemical resistant gloves to prevent contact. Launder before reuse.

Respiratory Protection
A respirator protection program that meets 29 CFR 1910.134 requirement must be followed whenever workplace conditions warrant a respirator's use. In areas where the Permissible Expsosure Limits are exceeded, use a properly fitted NIOSH-approved respirator.

Ingredient(s) - Exposure Limits

CEMENT, PORTLAND
- ACGIH TLV-TWA - 10 mg/m3
- OSHA PEL -TWA - 15 mg/m3 (total dust)
- OSHA PEL - TWA - 5 mg/m3 (respirable dust)

SILICA, AMORPHOUS FUSED
- ACGIH TLV-TWA 0.1 mg/m3
- OSHA PEL-TWA 20 mppcf
- OSHA PEL-TWA 80 / %SiO2 mg/m3

SILICA, QUARTZ
- ACGIH TLV-TWA 0.1 mg/m3 (Notice of Intended Change)
- ACGIH TLV-TWA 0.05 mg/m3 (Proposed)
- OSHA PEL-TWA 30/%SiO2+2 mg/m3
- OSHA PEL-TWA 10/%SiO2+2 mg/m3
- OSHA PEL-TWA 250/%SiO+5 mppcf

9. Physical And Chemical Properties

Appearance
Gray granules

Odor
Odorless

Chemical Type: Mixture
Physical State: Solid
Melting Point: >1200 °F
Specific Gravity: >1
Percent Volatiles: <0.5
Packing Density: 2 grams/cm3
Solubility: <1%
Evaporation Rate: N/AV

10. Stability And Reactivity

Stability: STABLE
Hazardous Polymerization: WILL NOT OCCUR

11. Toxicological Information

Miscellaneous Toxicological Information

Ingredient(s) - Carginogenicity
SILICA, QUARTZ

Sika Monotop 611

11. Toxicological Information - Continued

Ingredient(s) - Carginogenicity - Continued

NTP - Listed On The National Toxicology Program
Listed In The IARC Monographs

12. Ecological Information

No Data Available...

13. Disposal Considerations

Dispose in accordance with applicable federal, state and local government regulations. Waste generators must determine whether a discarded material is classified as a hazardous waste. USEPA guidelines for the classification determination are listed in 40 CFR Parts 261.3. Additionally, waste generators must consult state and local hazardous waste regulations to ensure complete and accurate classification.

14. Transport Information

Proper Shipping Name

Not regulated by the USDOT

15. Regulatory Information

U.S. Regulatory Information

All ingredients of this product are listed or are excluded from listing under the U.S. Toxic Substances Control Act (TSCA) Chemical Substance Inventory.

SARA Hazard Classes

Acute Health Hazard
Chronic Health Hazard

SARA Section 313 Notification

This product does not contain any ingredients regulated under Section 313 of the Emergency Planning and Community Right-To-Know Act of 1986 or 40 CFR 372.

State Regulations

WARNING: This product contains a chemical known to the State of California to cause cancer, birth defects, or other reproductive harm.

Ingredient(s) - State Regulations

SILICA, AMORPHOUS FUSED
- New Jersey - Workplace Hazard
- Massachusetts - Hazardous Substance

SILICA, QUARTZ
- New Jersey - Workplace Hazard
- Pennsylvania - Workplace Hazard
- California - Proposition 65
- Massachusetts - Hazardous Substance

16. Other Information

HMIS Rating

Health: *2
Fire: 0
Reactivity: 0
PPE: E

Sika Monotop 611

16. Other Information - Continued

Revision/Preparer Information
MSDS Preparer: EHS Department
MSDS Preparer Phone Number: 201-933-8800

Disclaimer

The data in this Material Safety Data Sheet relates only to the specific material herein and does not relate to use in combination with any other material or in any process. The information set forth herein is based on technical data that Sika believes to be reliable as of the date here of. Since conditions of use are outside our control, we make no warranties, express or implied andassume no liability in connection with any use of this information. Nothing herein is to be taken as a license to operate under or a recommendation to infringe any patents.

SIKA CORPORATION

Printed Using MSDS Generator™ 2000

VRH Construction Corp.

625 Eighth Avenue
2nd Flr, North Building
New York, NY 10018

Phone: 212-629-6187
Fax: 212-629-9243

SUBMITTAL NO. 03730-001
PACKAGE NO: 03730

TITLE: Sika Armatec 110 EpcCem
PROJECT: PANY/NJ-bt-200.200 WO 12
DRAWING:
STATUS: 3
BIC: PANYNJ

REQUIRED START: 5/26/2009
REQUIRED FINISH: 6/9/2009
DAYS HELD: 0
DAYS ELAPSED: 0
DAYS OVERDUE: -14

RECEIVED FROM		SENT TO		RETURNED BY		FORWARDED TO	
TG	JB	PANYNJ	KC	PANYNJ	KC	TG	JB

Revision No.	Description / Remarks	Received	Sent	Returned	Forwarded	Status	Sepias	Prints	Drawing Date	Held	Elapsed
000	Sika Armatec 110 EpoCem	5/26/2009	5/26/2009			3	0	8		0	0

Product Data Sheet
Edition 8.2003
Identification no. 182
Sika Armatec 110 EpoCem

03730-001
200.200 W.O. 12

Sika Armatec® 110 EpoCem®

Bonding Agent and Reinforcement Protection

Description	Sika Armatec 110 EpoCem is a 3-component, solvent-free, moisture-tolerant, epoxy-modified, cementitious product specifically formulated as a bonding agent and an anti-corrosion coating.
Where to Use	▪ As an anti-corrosion coating for reinforcing steel in concrete restoration. ▪ As added protection to reinforcing steel in areas of thin concrete cover. ▪ As a bonding agent for repairs to concrete and steel. ▪ As a bonding agent for placing fresh, plastic concrete to existing hardened concrete.
Advantages	▪ Excellent adhesion to concrete and steel. ▪ Acts as an effective barrier against penetration of water and chlorides. ▪ Long open time - up to 16 hours. ▪ Not a vapor barrier. ▪ Can be used exterior on-grade. ▪ Contains corrosion inhibitors. ▪ Excellent bonding bridge for cement or epoxy based repair mortars. ▪ High strength, unaffected by moisture when cured. ▪ Spray, brush or roller application. ▪ Non-flammable, solvent free.
Coverage	**Bonding agent:** minimum (theoretical) on smooth, even substrate 80 sq. ft./gal. (=20 mils thickness). Coverage will vary depending on substrate profile and porosity. **Reinforcement Protection:** 40 sq. ft./gal. (=20 mils thickness) (2 coat application).
Packaging	3.5 gal. unit. (47.6 fl. oz. Comp. A + 122.1 fl. oz. Comp. B + 46.82 lb. Comp. C) Comp. A + B in carton, Comp. C in multi-wall bag. 1.65 gal. unit. (22.7 fl. oz. A + 57.6 fl. oz. B + 4 bags @ 5.5 lb.) Factory-proportioned units in a pail.

Typical Data *(Material and curing conditions @ 73°F and 50% R.H.)*

Shelf Life 1 year in original, unopened packaging.

Storage Store dry at 40°-95°F (4°-35°C). **Condition material to 65°-75°F (18°-24°C) before using.** If components A and B are frozen, discard. Protect Component C from humidity.

Color Concrete gray

Density (Mixed) 125 lb./cu. ft. (2.0 kg.)

Pot Life Approximately 90 minutes

Compressive Strength (ASTM C-109)

3 days	4500 psi	(31.0 MPa)
7 days	6500 psi	(44.8 MPa)
28 days	8500 psi	(58.6 MPa)

Flexural Strength (ASTM C-348) 28 days 1250 psi (8.6 MPa)

Splitting Tensile Strength (ASTM C-496) 28 days 600 psi (4.1 MPa)

Important Data for Sika Armatec 110 as a Corrosion Protective Coating

Water

Water Permeability at 10 bar (145 psi)	8.92×10^{-15} ft./sec.
Control	7.32×10^{-10} ft./sec.
Water vapor diffusion coefficient μH_2O	110

Carbon Dioxide Carbon dioxide diffusion coefficient μCO_2 14000

TEST DATA: Time-to-Corrosion Study
- Sika Armatec 110 more than tripled the time to corrosion
- Reduced corrosion rate by over 40%

Important Data for Sika Armatec 110 as a Bonding Agent

Bond Strength (ASTM C882) 14 days moist cure, plastic concrete to hardened concrete:

Wet on Wet	2800 psi	(19.3 MPa)
24 hr. Open Time	2600 psi	(17.9 MPa)

Bond of Steel Reinforcement to Concrete (Pullout Test):

Sika Armatec 110 Coated	625 psi	(4.3 MPa)
Epoxy Coated	508 psi	(3.5 MPa)
Plain Reinforcement	573 psi	(3.95 MPa)

How to Use

Surface Preparation **Cementitious substrates:** Should be cleaned and prepared to achieve a laitance and contaminant-free surface prepared in accordance with the requirements specified by the overlay or repair material by blast cleaning or equivalent mechanical means. Substrate must be saturated surface dry (SSD) with no standing water.

Steel: Should be cleaned and prepared thoroughly by blast cleaning.

Mixing

Shake contents of both Component 'A' and Component 'B'. Empty entire contents of both Component 'A' and Component 'B' into a clean, dry mixing pail. Mix thoroughly for 30 seconds with a Sika paddle on a low speed (400-600 rpm) drill. Slowly add the entire contents of Component 'C' while continuing to mix for 3 minutes until blend is uniform and free of lumps. Mix only that quantity that can be applied within its pot life.

Application

As a bonding agent - Apply by stiff-bristle brush or broom. Spray apply with Goldblatt Pattern Pistol or equal equipment. For best results, work the bonding slurry well into the substrate to ensure complete coverage of all surface irregularities. Apply the freshly mixed patching mortar or concrete wet on wet, or up to the maximum recommended open time, onto the bonding slurry.

Maximum recommended open time between application of Armatec 110 and patching mortar or concrete:

80°-95°F (26°-35°C)	6 hours
65°-79°F (18°-26°C)	12 hours
50°-64°F (10°-17°C)	16 hours
40°-49°F (4°-9°C)	wet-on-wet

For corrosion protection only - Apply by stiff-bristle brush or spray at 80 sq. ft./gal. (20 mils). Take special care to properly coat the underside of the totally exposed steel. Allow coating to dry 2-3 hours @ 73°F, then apply a second coat at the same coverage. Allow to dry again before the repair mortar or concrete is applied. Pour or place repair within 7 days.

Limitations

- Substrate and ambient temperature: Minimum 40°F (5°C)
- Maximum 95°F (35°C)
- Minimum thickness: As a bonding agent 20 mils.
- For reinforcement protection 40 mils
- (2 coats, 20 mils each).
- Not recommended for use with expansive grouts.
- Use of semi-dry mortars onto Sika Armatec 110 EpoCem must be applied "wet on wet".
- When used in overhead applications with hand placed patching mortars, use "wet on wet" for maximum mortar build thickness.
- Substrate profile as specified by the overlay or repair material is still required.
- As with all cement based materials, avoid contact with aluminum to prevent adverse chemical reaction and possible product failure. Insulate potential areas of contact by coating aluminum bars, rails, posts etc. with an appropriate epoxy such as Sikadur HI-Mod 32.

Caution

Part A & B: IRRITANT; SENSITIZER - Can cause skin sensitization after prolonged or repeated contact. Skin and eye irritant. High concentrations of vapor may cause respiratory irritation. Avoid skin contact. Use only with adequate ventilation. Use of safety goggles and chemical resistant gloves is recommended.

Part C: IRRITANT; SUSPECT CARCINOGEN - Contains crystalline silica, quartz (sand); cement. Skin and eye irritant. Dust may cause respiratory tract irritation. Avoid breathing dust. Use only with adequate ventilation. May cause delayed lung injury (silicosis). IARC list crystalline silica as having sufficient evidence of carcinogenicity to laboratory animals and limited evidence of carcinogenicity in humans. NTP also lists crystalline silica as a suspect carcinogen. Use of safety gloves is recommended. In case of high dust concentrations or exceedance of PELs, use an appropriate NIOSH approved respirator.

First Aid

In case of eye contact, wash immediately with soap and water for 15 minutes; immediately consult a physician. In case of skin contact, wash with soap and water; consult a physician for irritation. For respiratory problems, remove person to fresh air and institute artificial respiration if necessary; consult a physician. In case of ingestion, immediately consult a physician. Wash clothing before reuse.

Clean-Up

In case of spills or leaks, wear suitable protective equipment, contain spill, collect with absorbent material, and transfer to a suitable container. Ventilate area. Avoid contact. Dispose of in accordance with current, applicable local, state, and federal regulations.

KEEP CONTAINER TIGHTLY CLOSED
NOT FOR INTERNAL CONSUMPTION
KEEP OUT OF REACH OF CHILDREN
FOR INDUSTRIAL USE ONLY
CONSULT MATERIAL SAFETY DATA SHEET FOR MORE INFORMATION

Sika warrants this product for one year from date of installation to be free from manufacturing defects and to meet the technical properties on the current technical data sheet if used as directed within shelf life. User determines suitability of product for intended use and assumes all risks. Buyer's sole remedy shall be limited to the purchase price or replacement of product exclusive of labor or cost of labor.

NO OTHER WARRANTIES EXPRESS OR IMPLIED SHALL APPLY INCLUDING ANY WARRANTY OF MERCHANTABILITY OR FITNESS FOR A PARTICULAR PURPOSE. SIKA SHALL NOT BE LIABLE UNDER ANY LEGAL THEORY FOR SPECIAL OR CONSEQUENTIAL DAMAGES.

Visit our website at www.sikausa.com
1-800-933-SIKA NATIONWIDE

Regional Information and Sales Centers. For the location of your nearest Sika sales office, contact your regional center.

Sika Corporation
201 Polito Avenue
Lyndhurst, NJ 07071
Phone: 800-933-7452
Fax: 201-933-6225

Sika Canada Inc.
601 Delmar Avenue
Pointe Claire
Quebec H9R 4A9
Phone: 514-697-2610
Fax: 514-694-2792

Sika Mexicana S.A. de C.V.
Carretera Libre Celaya Km. 8.5
Corregidora, Queretaro
C.P. 76920 A.P. 136
Phone: 52 42 25 0122
Fax: 52 42 25 0537

QUALITY ISO 9001 9002 ACHIEVEMENT

Sika and Armatec are registered trademarks. Made in USA. Printed in USA.

MATERIAL SAFETY DATA SHEET

Sika Armatec 110 - Part A

HMIS	
HEALTH	2
FLAMMABILITY	1
REACTIVITY	0
PERSONAL PROTECTION	C

1. Product And Company Identification

Supplier
Sika Corporation
201 Polito Ave
Lyndhurst, NJ 07071

Company Contact: EHS Department
Telephone Number: 201-933-8800
FAX Number: 201-933-9379
Web Site: www.sikausa.com

Manufacturer
Sika Corporation
201 Polito Ave
Lyndhurst, NJ 07071

Company Contact: EHS Department
Telephone Number: 201-933-8800
FAX Number: 201-933-9379
Web Site: www.sikausa.com

Supplier Emergency Contacts & Phone Number
CHEMTREC: 800-424-9300
INTERNATIONAL: 703-527-3887

Manufacturer Emergency Contacts & Phone Number
CHEMTREC: 800-424-9300
INTERNATIONAL: 703-527-3887

Issue Date: 03/08/2005

Product Name: Sika Armatec 110 - Part A
Chemical Family: Epoxy Compound
Chemical Formula: RMF-1681
MSDS Number: 3499
Product Code: 018213N

2. Composition/Information On Ingredients

Ingredient Name	CAS Number		Percent Of Total Weight
EPOXY RESIN	25068-38-6		
O-CRESYL GLYCIDYL ETHER	2210-79-9		

3. Hazards Identification

Eye Hazards
Causes eye irritation.

Skin Hazards
May cause skin irritation. Prolonged and/or repeated contact with skin may cause an allergic reaction/sensitization.

Ingestion Hazards
May be fatal if swallowed.

Inhalation Hazards
May cause respiratory tract irritation.

Sika Armatec 110 - Part A

4. First Aid Measures

Eye

In case of contact, hold eyelids apart and immediately flush eyes with plenty of tepid water for at least 15 minutes. Get medical attention immediately if irritation develops and persists.

Skin

In case of contact, immediately flush skin with soap and plenty of tepid water for at least 15 minutes. Get medical attention immediately if irritation (redness, rash, blistering) develops and persists.

Ingestion

If swallowed, do not induce vomiting unless directed to do so by medical personnel. Dilute with water. Get medical attention immediately.

Inhalation

Remove to fresh air. If not breathing, give artificial respiration, seek medical attention.

5. Fire Fighting Measures

Flash Point: >220 °F
Autoignition Point: N/A °F

Fire And Explosion Hazards

None Known.

Extinguishing Media

In case of fire, use water spray (fog) foam, dry chemical, or CO2.

Fire Fighting Instructions

In the event of a fire, firefighters should wear full protective clothing and NIOSH-approved self-contained breathing apparatus with a full facepiece operated in the pressure demand or other positive pressure mode.

6. Accidental Release Measures

Avoid release to the environment. Use appropriate Personal Protective Equipment (PPE). Contain spill and collect with absorbent material and transfer into suitable containers. Do not flush to sewer or allow to enter waterways. Ventilate enclosed area.

7. Handling And Storage

Handling And Storage Precautions

Keep out of reach of children. Store in a cool dry area. Keep from freezing. Keep containers tightly closed.

Work/Hygienic Practices

Wash thoroughly with soap and water after handling.

8. Exposure Controls/Personal Protection

Engineering Controls

Use with adequate general and local exhaust ventilation. Refer to the current edition of "Industrial Ventilation: A Manual of Recommended Practice" published by the American Conference of Governmental Industrial Hygienists for information on the design, installation, use, and maintenance of exhaust systems.

Eye/Face Protection

Safety glasses with side shields or goggles recommended.

Skin Protection

Chemical-resistant gloves. Lab coat or other work clothing to prevent skin exposure. Launder before reuse.

Respiratory Protection

A respirator protection program that meets 29 CFR 1910.134 requirement must be followed whenever workplace conditions warrant a respirator's use.

Sika Armatec 110 - Part A

8. Exposure Controls/Personal Protection - Continued

Other/General Protection
Wash thoroughly after handling.

9. Physical And Chemical Properties

Appearance
Milky, white liquid

Odor
Mild

Chemical Type: Mixture
Melting Point: N/A °F
Boiling Point: N/A °F
Specific Gravity: 1.09
Percent Volatiles: 38%, wt.
Packing Density: 9.13
Vapor Pressure: N/A
Vapor Density: >AIR
Solubility: Miscible
Evaporation Rate: Slower than ether

10. Stability And Reactivity

Stability: Stable
Hazardous Polymerization: Will not occur

Conditions To Avoid (Stability)
None known

Incompatible Materials
None known

Hazardous Decomposition Products
Oxides of Nitrogen, CO, CO2

11. Toxicological Information

No Data Available...

12. Ecological Information

No Data Available...

13. Disposal Considerations

Dispose in accordance with applicable federal, state and local government regulations. Waste generators must determine whether a discarded material is classified as a hazardous waste. USEPA guidelines for the classification determination are listed in 40 CFR Parts 261.3. Additionally, waste generators must consult state and local hazardous waste regulations to ensure complete and accurate classification.

14. Transport Information

Proper Shipping Name
Not regulated by the USDOT.

15. Regulatory Information

U.S. Regulatory Information
All ingredients of this product are listed or are excluded from listing under the U.S. Toxic Substances Control Act (TSCA) Chemical Substance Inventory.

Sika Armatec 110 - Part A

15. Regulatory Information - Continued

U.S. Regulatory Information - Continued

SARA Hazard Classes

Acute Health Hazard

16. Other Information

HMIS Rating

Health: 2
Fire: 1
Reactivity: 0
PPE: C

Revision/Preparer Information

MSDS Preparer: EHS Department
MSDS Preparer Phone Number: 201-933-8800

Disclaimer

The data in this Material Safety Data Sheet relates only to the specific material herein and does not relate to use in combination with any other material or in any process. The information set forth herein is based on technical data that Sika believes to be reliable as of the date hereof. Since conditions of use are outside our control, we make no warranties, express or implied and assume no liability in connection with any use of this information. Nothing herein is to be taken as a license to operate under or a recommendation to i nfringe any patents.

SIKA CORPORATION

Printed Using MSDS Generator™ 2000

MATERIAL SAFETY DATA SHEET

Sika Armatec 110 - Part B

HMIS	
HEALTH	3
FLAMMABILITY	1
REACTIVITY	0
PERSONAL PROTECTION	D

1. Product And Company Identification

Supplier
Sika Corporation
201 Polito Ave
Lyndhurst, NJ 07071

Company Contact: EHS Department
Telephone Number: 201-933-8800
FAX Number: 201-933-9379
Web Site: www.sikausa.com

Manufacturer
Sika Corporation
201 Polito Ave
Lyndhurst, NJ 07071

Company Contact: EHS Department
Telephone Number: 201-933-8800
FAX Number: 201-933-9379
Web Site: www.sikausa.com

Supplier Emergency Contacts & Phone Number
CHEMTREC: 800-424-9300
INTERNATIONAL: 703-527-3887

Manufacturer Emergency Contacts & Phone Number
CHEMTREC: 800-424-9300
INTERNATIONAL: 703-527-3887

Issue Date: 03/03/2005

Product Name: Sika Armatec 110 - Part B
Chemical Family: Modified Aliphatic Amine
MSDS Number: 3484
Product Code: 018214N

2. Composition/Information On Ingredients

Ingredient Name	CAS Number		Percent Of Total Weight
PROPIATERY BLEND OF ALIPHATIC & CYCLOALIPHATIC AMINES	Mixture		

3. Hazards Identification

Eye Hazards
Causes eye irritation.

Skin Hazards
Causes skin irritation. Prolonged and/or repeated skin contact may cause an allergic reaction/sensitization.

Ingestion Hazards
Harmful if swallowed.

Inhalation Hazards
May cause respiratory tract irritation.

4. First Aid Measures

Eye
In case of contact, hold eyelids apart and immediately flush eyes with plenty of tepid water for at least 15 minutes. Get medical attention immediately if irritation develops and persists.

Sika Armatec 110 - Part B

4. First Aid Measures - Continued

Skin
In case of contact, immediately flush skin with soap and plenty of tepid water for at least 15 minutes. Get medical attention immediately if irritation (redness, rash, blistering) develops and persists.

Ingestion
If swallowed, do not induce vomiting unless directed to do so by medical personnel. Dilute with water.

Inhalation
Remove to fresh air. If not breathing, give artificial respiration. Consult with a Physician.

5. Fire Fighting Measures

Flash Point: 150 °F 67 °C
Flash Point Method: DIN 51758
Autoignition Point: 510 °C

Fire And Explosion Hazards
Exposure to heat builds up pressure in closed containers.

Extinguishing Media
In case of fire, use water spray (fog) foam, dry chemical, or CO2.

Fire Fighting Instructions
Firefighters should wear self-contained breathing apparatus and full protective gear.

6. Accidental Release Measures

Avoid release to the environment. Use appropriate Personal Protective Equipment (PPE). Contain spill and collect with absorbent material and transfer into suitable containers. Do not flush to sewer or allow to enter waterways. Ventilate enclosed area.

7. Handling And Storage

Handling And Storage Precautions
Keep out of reach of children. Store in a cool, dry, well ventilated area. Keep containers tightly closed.

Work/Hygienic Practices
Wash thoroughly with soap and water after handling.

8. Exposure Controls/Personal Protection

Engineering Controls
Use with adequate general and local exhaust ventilation. Refer to the current edition of "Industrial Ventilation: A Manual of Recommended Practice" published by the American Conference of Governmental Industrial Hygienists for information on the design, installation, use, and maintenance of exhaust systems.

Eye/Face Protection
Faceshield over safety glasses or goggles.

Skin Protection
Chemical-resistant gloves. Lab coat or other work clothing to prevent skin exposure. Launder before reuse.

Respiratory Protection
A respirator protection program that meets 29 CFR 1910.134 requirement must be followed whenever workplace conditions warrant a respirator's use.

Other/General Protection
Wash thoroughly after handling.

Sika Armatec 110 - Part B

9. Physical And Chemical Properties

Appearance
Liquid

Odor
Amine

Chemical Type: Mixture
Specific Gravity: 1.03
Vapor Density: >Air
pH Factor: 10
Solubility: Soluble
Evaporation Rate: Slower than ether

10. Stability And Reactivity

Stability: Stable
Hazardous Polymerization: Will not occur

Incompatible Materials
Strong oxidizing materials, acids, and bases.

Hazardous Decomposition Products
CO, CO2, Oxides of Nitrogen

11. Toxicological Information

No Data Available...

12. Ecological Information

No Data Available...

13. Disposal Considerations

Dispose in accordance with applicable federal, state and local government regulations. Waste generators must determine whether a discarded material is classified as a hazardous waste. USEPA guidelines for the classification determination are listed in 40 CFR Parts 261.3. Additionally, waste generators must consult state and local hazardous waste regulations to ensure complete and accurate classification.

14. Transport Information

Proper Shipping Name
Not regulated by the USDOT.

15. Regulatory Information

U.S. Regulatory Information
All ingredients of this product are listed or are excluded from listing under the U.S. Toxic Substances Control Act (TSCA) Chemical Substance Inventory.

SARA Hazard Classes
Acute Health Hazard

16. Other Information

HMIS Rating
Health: 3
Fire: 1
Reactivity: 0
PPE: D

Sika Armatec 110 - Part B

16. Other Information - Continued

HMIS Rating - Continued
Revision/Preparer Information
MSDS Preparer: EHS Department
MSDS Preparer Phone Number: 201-933-8800

Disclaimer

The data in this Material Safety Data Sheet relates only to the specific material herein and does not relate to use in combination with any other material or in any process. The information set forth herein is based on technical data that Sika believes to be reliable as of the date hereof. Since conditions of use are outside our control, we make no warranties, express or implied and assume no liability in connection with any use of this information. Nothing herein is to be taken as a license to operate under or a recommendation to infringe any patents.

SIKA CORPORATION

Printed Using MSDS Generator™ 2000

MATERIAL SAFETY DATA SHEET

Sika Armatec 110 - Part C

HMIS	
HEALTH	*2
FLAMMABILITY	0
REACTIVITY	0
PERSONAL PROTECTION	C

1. Product And Company Identification

Supplier
Sika Corporation
201 Polito Ave
Lyndhurst, NJ 07071

Company Contact: EHS Department
Telephone Number: 201-933-8800
FAX Number: 201-933-9379
Web Site: www.sikausa.com

Manufacturer
Sika Corporation
201 Polito Ave
Lyndhurst, NJ 07071

Company Contact: EHS Department
Telephone Number: 201-933-8800
FAX Number: 201-933-9379
Web Site: www.sikausa.com

Supplier Emergency Contacts & Phone Number
CHEMTREC: 800-424-9300
INTERNATIONAL: 703-527-3887

Manufacturer Emergency Contacts & Phone Number
CHEMTREC: 800-424-9300
INTERNATIONAL: 703-527-3887

Issue Date: 03/03/2005

Product Name: Sika Armatec 110 - Part C
Chemical Family: Cementitious Mortar
Chemical Formula: RMF-1609
MSDS Number: 3485
Product Code: 018219N

2. Composition/Information On Ingredients

Ingredient Name	CAS Number		Percent Of Total Weight
CEMENT, PORTLAND	65997-15-1		30 - 35
SILICA, QUARTZ	14808-60-7		60 - 65
SODIUM NITRITE	7632-00-0		1 - 5

3. Hazards Identification

Eye Hazards
May cause eye irritation.

Skin Hazards
May cause skin irritation.

Ingestion Hazards
May be harmful if swallowed.

Inhalation Hazards
May cause respiratory tract irritation. Breathing dust may cause nose, throat or lung irritation. Respirable crystalline silica can cause silicosis, a fibrosis (scarring) of the lungs. Silicosis may be progressive.

Sika Armatec 110 - Part C

4. First Aid Measures

Eye

In case of contact, hold eyelids apart and immediately flush eyes with plenty of tepid water for at least 15 minutes. Get medical attention immediately if irritation develops and persists.

Skin

In case of contact, immediately flush skin with soap and plenty of tepid water for at least 15 minutes. Get medical attention immediately if irritation (redness, rash, blistering) develops and persists.

Ingestion

If swallowed, do not induce vomiting unless directed to do so by medical personnel.

Inhalation

Remove to fresh air. If not breathing, give artificial respiration, seek medical attention.

5. Fire Fighting Measures

Flash Point: N/A °F
Autoignition Point: N/A °F

Fire And Explosion Hazards

None Known

Extinguishing Media

Use the appropriate extinguishing media for the surrounding fire.

Fire Fighting Instructions

In the event of a fire, firefighters should wear full protective clothing and NIOSH-approved self-contained breathing apparatus with a full facepiece operated in the pressure demand or other positive pressure mode.

6. Accidental Release Measures

Avoid release to the environment. Using appropriate personal protective equipment (PPE), shovel material into waste containers taking care to minimize dust. Dampen if necessary to control dust. Vacuum clean dust with equipment fitted with High Efficiency Particulate Air (HEPA) filters.

7. Handling And Storage

Handling And Storage Precautions

Keep out of reach of children. Store in a cool, dry, well ventilated area. Keep containers tightly closed.

Work/Hygienic Practices

Wash thoroughly with soap and water after handling.

8. Exposure Controls/Personal Protection

Engineering Controls

Use of a system of local and/or general exhaust is recommended to keep employee below applicable expsoure limits. Refer to the current edition of "Industrial Ventilation: A Manual of Recommended Practice" published by the American Conference of Governmental Industrial Hygienists for information on the design, installation, use, and maintenance of exhaust systems.

Eye/Face Protection

Safety glasses with side shields or goggles.

Skin Protection

Chemical-resistant gloves. Lab coat or other work clothing to prevent skin exposure. Launder before reuse.

Respiratory Protection

A respirator protection program that meets 29 CFR 1910.134 requirement must be followed whenever workplace conditions warrant a respirator's use. In areas where the Permissible Expsosure Limits are exceeded, use a properly fitted NIOSH-approved respirator.

Sika Armatec 110 - Part C

8. Exposure Controls/Personal Protection - Continued

Other/General Protection
Wash thoroughly after handling.

Ingredient(s) - Exposure Limits
CEMENT, PORTLAND
ACGIH TLV-TWA - 10 mg/m3
OSHA PEL -TWA - 15 mg/m3 (total dust)
OSHA PEL - TWA - 5 mg/m3 (respirable dust)
SILICA, QUARTZ
ACGIH TLV-TWA 0.1 mg/m3 (Notice of Intended Change)
ACGIH TLV-TWA 0.05 mg/m3 (Proposed)
OSHA PEL-TWA 30/%SiO2+2 mg/m3
OSHA PEL-TWA 10/%SiO2+2 mg/m3
OSHA PEL-TWA 250/%SiO+5 mppcf

9. Physical And Chemical Properties

Appearance
Solid/Sand

Odor
Cement

Chemical Type: Mixture
Physical State: Solid
Melting Point: N/A °F
Specific Gravity: 2.70
Vapor Pressure: N/A
Vapor Density: N/A
pH Factor: 11
Solubility: N/A

10. Stability And Reactivity

Stability: Stable
Hazardous Polymerization: Will not occur

Conditions To Avoid (Stability)
None Known

Incompatible Materials
None Known

Hazardous Decomposition Products
None Known

11. Toxicological Information

Ingredient(s) - Carginogenicity
SILICA, QUARTZ
NTP - Listed On The National Toxicology Program
Listed In The IARC Monographs

12. Ecological Information

No Data Available...

Sika Armatec 110 - Part C

13. Disposal Considerations

Dispose in accordance with applicable federal, state and local government regulations. Waste generators must determine whether a discarded material is classified as a hazardous waste. USEPA guidelines for the classification determination are listed in 40 CFR Parts 261.3. Additionally, waste generators must consult state and local hazardous waste regulations to ensure complete and accurate classification.

14. Transport Information

Proper Shipping Name

- Not regulated by the USDOT.

15. Regulatory Information

U.S. Regulatory Information

All ingredients of this product are listed or are excluded from listing under the U.S. Toxic Substances Control Act (TSCA) Chemical Substance Inventory.

SARA Hazard Classes

Acute Health Hazard
Chronic Health Hazard

SARA Title III - Section 313 Supplier Notification

This product contains the following toxic chemicals that are subject to the reporting requirements of section 313 of the Emergency Planning and Community Right-To-Know Act (EPCRA) of 1986 and of 40 CFR 372.

SODIUM NITRITE (7632-00-0) 1 - 5 %

This information must be included on all MSDSs that are copied and distributed for this material.

Ingredient(s) - U.S. Regulatory Information

SODIUM NITRITE
SARA Title III - Section 313 Form "R"/TRI Reportable Chemical

State Regulations

WARNING: This product contains a chemical known to the State of California to cause cancer, birth defects, or other reproductive harm.

Ingredient(s) - State Regulations

SILICA, QUARTZ
New Jersey - Workplace Hazard
Pennsylvania - Workplace Hazard
California - Proposition 65
Massachusetts - Hazardous Substance

SODIUM NITRITE
New Jersey - Workplace Hazard
New Jersey - Environmental Hazard
Pennsylvania - Workplace Hazard
Pennsylvania - Environmental Hazard
New York City - Hazardous Substance

16. Other Information

HMIS Rating

Health: *2
Fire: 0
Reactivity: 0
PPE: C

Sika Armatec 110 - Part C

16. Other Information - Continued

Revision/Preparer Information
MSDS Preparer: EHS Department
MSDS Preparer Phone Number: 201-933-8800

Disclaimer

The data in this Material Safety Data Sheet relates only to the specific material herein and does not relate to use in combination with any other material or in any process. The information set forth herein is based on technical data that Sika believes to be reliable as of the date hereof. Since conditions of use are outside our control, we make no warranties, express or implied and assume no liability in connection with any use of this information. Nothing herein is to be taken as a license to operate under or a recommendation to infringe any patents.

SIKA CORPORATION

Printed Using MSDS Generator™ 2000

Materials Engineering Unit

241 Erie Street, Room 234
Jersey City, NJ 07310
Tel: 201-216-2952 **Fax:** 201-216-2949

THE PORT AUTHORITY OF NY & NJ

TRANSMITTAL
No. 00023

PROJECT: WO12 South Wing Emerg. Stair Repairs

DATE: 7/20/2009

TO: VRH Construction Corp.
c/o Port Authority of NY & NJ
625 Eight Ave. 2nd Flr. North Bldg
New York, NY 10018

CONTRACT: PABT-200.200 WO12

ATTN: **Anthony Carnabuci**

	STATUS LEGEND:	
☐ Shop Drawings	Approved (APP)	New Item (NEW)
☑ Letter	Approved as Corrected (AAC)	Not Approved (NA)
☐ Prints	Approved as Noted (AAN)	Not Reviewed (NR)
☐ Change Order	For Record Only (FRO)	Review With Comments (RWC)
☐ Plans	For Your Information (FYI)	Review With No Comments (RWNC)
☐ Samples	Incomplete (INC)	Superseded (SUPS)
☐ Specifications		
☑ Other: Made from Submittal	☐ Attached ☐ Separate Cover Via: Mail	
	Review and Comment	

SUBMITTAL	REV.	DATE	DESCRIPTION	Remark	STATUS
09910-0001A	R000	7/20/2009	Desc: Loxon Acrylic Primer; an acrylic primer for concrete walls and plaster surfaces		APP
09910-0001B	R000	7/20/2009	Desc: MSDS for Loxon Acrylic Primer		FRO
09910-0002A	R000	7/20/2009	Desc: DTM Acrylic Coating; an acrylic semi-gloss 2nd coat and finish coat for concrete, CMU and plaster		APP
09910-0002B	R000	7/20/2009	Desc: MSDS for DTM Acrylic Semi-Gloss		FRO
09910-0003A	R000	7/20/2009	Desc: Heavy Duty Block Filler; an acrylic block filler for CMU walls		APP
09910-0003B	R000	7/20/2009	Desc: MSDS for B42W46 Heavy Duty Block Filler		FRO
09910-0004A	R000	7/20/2009	Desc: Zinc Clad IV; a zinc-rich epoxy primer for steel; Spec. Section 09910 Appendix B, system S-1G	#1	AAN
09910-0004B	R000	7/20/2009	Desc: MSDS for Zinc Clad IV		FRO
09910-0005A	R000	7/20/2009	Desc: Acrolon 218 HS; an epoxy 2nd coat for steel; Spec. Section 09910 Appendix B, system S-1G		APP
09910-0005B	R000	7/20/2009	Desc: MSDS for Epoxy Mastic DOT		FRO
09910-0006A	R000	7/20/2009	Desc: Epoxy Mastric D.O.T.; a gloss polyurethane finish coat for steel; Spec. Secdtion 09910, Appendix B, system S-1G		APP
09910-0006B	R000	7/20/2009	Desc: MSDS for Acrolon 218 HS		FRO

ARE	SEC	RE	ARE	DE	DE
	THE PORT AUTHORITY OF NY & NJ PABT ENGINEERING FIELD OFFICE JUL 23 2009				
FILE					

Materials Engineering Unit

241 Erie Street, Room 234
Jersey City, NJ 07310
Tel: 201-216-2952 Fax: 201-216-2949

THE PORT AUTHORITY OF NY & NJ

TRANSMITTAL
No. 00023

PROJECT: WO12 South Wing Emerg. Stair Repairs

DATE: 7/20/2009

TO: VRH Construction Corp.
c/o Port Authority of NY & NJ
625 Eight Ave. 2nd Flr. North Bldg
New York, NY 10018

CONTRACT: PABT-200.200 WO12

ATTN: **Anthony Carnabuci**

	STATUS	LEGEND:
☐ Shop Drawings	Approved (APP)	New Item (NEW)
☑ Letter	Approved as Corrected (AAC)	Not Approved (NA)
☐ Prints	Approved as Noted (AAN)	Not Reviewed (NR)
☐ Change Order	For Record Only (FRO)	Review With Comments (RWC)
☐ Plans	For Your Information (FYI)	Review With No Comments (RWNC)
☐ Samples	Incomplete (INC)	Superseded (SUPS)
☐ Specifications		
☑ Other: Made from Submittal	☐ Attached ☐ Separate Cover Via: Mail	
	Review and Comment	

Remarks: 1. Prior to the start of work, submit the paint applicator's Quality Control Plan, surface preparation/coating procedure, and a copy of the inspection report that will be used. Note that this coating requires abrasive blasting surface preparation. Power tool cleaning to bare metal (SSPC SP11) may also be acceptable.

Approvals shall not relieve the Contractor of any responsibility as required by the Contract or waive any further authority of the Engineer or modify or waive any provision of the subject Contract with regard to this material(s) or its approval.

Material(s), which do not conform to the contract documents, will be subject to rejection at the job site by the Resident Engineer.

If you have any questions, please call John Bullard of my staff at (201) 216-2993. Our fax number is (201) 216-2949.

CC: P. Salvatore w/att., A. Kaprielian w/att., J. Bullard, MF

Signed: _____
Casimir Bognacki, P.E.
Chief of Materials Engineering

Expedition ®

LETTER OF TRANSMITTAL

Action Key
1 For your records and/or use
2 For price quotation
3 For approval
4 Approved/Reviewed
5 Approved as noted: Re-submission not required
6 Approved as noted: Revise and re-submit
7 Rejected: Re-submit per contract documents

RECEIVED JUL - 2 2009

VRH CONSTRUCTION CORP.
General Contractors & Construction Managers

To	The Port Authority of NY & NJ	Transmittal No.	00015
	Two Gateway Center	Job No.	2030WO12
	15th Floor	Project	PANY/NJ-bt-200.200 WO 12
	Newark, NJ 07102		South Wing Emergency Stair Repairs
Attention	Ka Kei Chan		
Phone No.	973-792-4629 Fax 973-792-4602		

We are sending you herewith the following: ☐ Drawings ☒ Shop Drawings ☐ Samples ☐ Specifications ☒ Other:

Via: ☒ Attached ☐ Separate Cover Via Mail

Quantity	Drawing/Submittal No.	Description	Action
8	09910-001 A, B	Dwg: Title: Loxon Acrylic Primer Desc: Loxon Acrylic Primer	3
8	09910-003 A, B	Dwg: Title: Heavy Duty Block Filler Desc: Heavy Duty Block Filler	3
8	09910-004 A, B	Dwg: Title: Zinc Clad IV Desc: Zinc Clad IV	3
8	09910-005 A, B	Dwg: Title: Acrolon 218 HS Desc: Acrolon 218 HS	3
8	09910-006 A, B	Dwg: Title: Epoxy Mastic D.O.T. Desc: Epoxy Mastic D.O.T.	3
8	09910-002 A, B	Dwg: Title: DTM Acrylic Coating Desc: DTM Acrylic Coating	3

Remarks:

cc: P. Salvatore; A. Kaprielian/PANYNJ

Signed Anthony Carnabuci

By Anthony J. Carnabuci

Date 6/29/2009

625 Eighth Avenue
2nd Flr, North Building
New York, NY 10018

Phone
212-629-6187
Fax
212-629-9243

108.11

SHERWIN WILLIAMS.

MASONRY
COATING SYSTEMS
Concrete Solutions. Solid Results.

LOXON®
ACRYLIC PRIMER
A24W300

As of 09/22/08, Complies with:			
OTC	Yes	LEED® CIv2.0	No
SCAQMD	Yes	LEED® NCv2.2	No
CARB	Yes	LEED® CSv2.0	No
MPI Spec #	3	LEED® H	No
NAHB			

09910-001
200.200 W.O. 12

CHARACTERISTICS

Loxon Acrylic Primer is an acrylic coating specifically engineered for exterior, above-grade, masonry surfaces requiring a high performance primer. It is highly alkali and efflorescence resistant. It reinforces the performance of exterior latex paints and can be used on concrete, concrete block, brick, and stucco. This may be applied to a surface with a pH of 6 to 13.

Color: White
Coverage: 200 sq ft/gal @ 8 mils wet; 3.2 mils dry
Coverage on porous & rough stucco 80 square feet per gallon
Drying Time, @ 77°F, 50% RH:
Drying and recoat times are temperature, humidity and film thickness dependent.
Touch: 4 hours
Recoat: 24 hours
Flash Point: N/A
Finish: 0-10 units @ 85°
Tinting - For best color development, use the recommended "P"-shade primer. If desired, up to 4 oz per gallon of Blend-A-Color Toner can be used to approximate the topcoat color. Check color before use.
Vehicle Type: Acrylic

A24W300

VOC: 97 g/L; 0.81 lb/gal
Volume Solids: 40 ± 2%
Weight Solids: 54 ± 2%
Weight per Gallon: 10.8 lb

PHYSICAL PROPERTIES

Flexibility ..... Passes
ASTM D522 - Method B, 180° bend, 1/8" mandrel
Alkali Resistance ..... Passes
Based on ASTM D1308
Mildew Resistance ..... Passes
ASTM D3273/D3274

SPECIFICATION

Must be topcoated within 14 days.

Concrete, Stucco, Block
1 ct. Loxon Acrylic Primer
2 cts. Appropriate latex topcoat
Spray and backroll on porous & rough stucco to achieve required film build and a pin-hole free surface.

APPLICATION

Apply at temperatures above 50°F.
No reduction necessary.
Do not paint in direct sun or on a hot surface.
May be applied to damp but not to wet surfaces.
Brush
Use a quality nylon/polyester brush.
Roller
Use a quality 1/2" to 1-1/2" nap synthetic roller cover.
Spray—Airless
Pressure ..... 2000-2700 psi
Tip ..... .019"
Reduction ..... none
Spray—Conventional
Air Pressure ..... 40-60 psi
Fluid Pressure ..... 20 psi
Cap/Tip 704/FX
Reduction ..... up to 1 pint/gallon
Spray and backroll on porous & rough stucco to achieve required film build and a pin-hole free surface.

SURFACE PREPARATION

WARNING! Removal of old paint by sanding, scraping or other means may generate dust or fumes that contain lead. Exposure to lead dust or fumes may cause brain damage or other adverse health effects, especially in children or pregnant women. Controlling exposure to lead or other hazardous substances requires the use of proper protective equipment, such as a properly fitted respirator (NIOSH approved) and proper containment and cleanup. For more information, call the National Lead Information Center at 1-800-424-LEAD (in US) or contact your local health authority.

Concrete/Stucco/Block
All new surfaces must cure for at least 7 days. Remove all form release and curing agents. Pressure clean (minimum 2100 psi) to remove all dirt, dust, grease, oil, loose particles, laitance, foreign material, peeling and defective coatings, chalks, etc. Allow the surface to dry before proceeding. Repair cracks, voids, and other holes with ConSeal™ Patches and Sealants.

Mildew
Remove before painting by washing with a solution of 1 part liquid bleach and 3 parts water. Apply the solution and scrub the mildewed area. Allow the solution to remain on the surface for 10 minutes. Rinse thoroughly with water and allow the surface to dry before painting. Wear protective eyewear, waterproof gloves, and protective clothing. Quickly wash off any of the mixture that comes in contact with your skin. Do not add detergents or ammonia to the bleach/water solution.

continued on back

108.11

LOXON®

ACRYLIC PRIMER A24W300

SHERWIN WILLIAMS.

SURFACE PREPARATION

Caulking
Gaps between windows, doors, trim, and other through-wall openings can be filled with the appropriate caulk after priming the surface.

CLEANUP INFORMATION

Clean spills and spatters immediately with soap and warm water. Clean hands and tools immediately after use with soap and warm water. After cleaning, flush spray equipment with mineral spirits to prevent rusting of the equipment. Follow manufacturer's safety recommendations when using mineral spirits.

CAUTIONS

For exterior use only.
Protect from freezing.
Non-photochemically reactive.

LABEL CAUTIONS
CAUTION contains CRYSTALLINE SILICA, ZINC. Use only with adequate ventilation. To avoid overexposure, open windows and doors or use other means to ensure fresh air entry during application and drying. If you experience eye watering, headaches, or dizziness, increase fresh air, or wear respiratory protection (NIOSH approved) or leave the area. Adequate ventilation required when sanding or abrading the dried film. If adequate ventilation cannot be provided wear an approved particulate respirator (NIOSH approved). Follow respirator manufacturer's directions for respirator use. Avoid contact with eyes and skin. Wash hands after using. Keep container closed when not in use. Do not transfer contents to other containers for storage. FIRST AID: In case of eye contact, flush thoroughly with large amounts of water. Get medical attention if irritation persists. If swallowed, call Poison Control Center, hospital emergency room, or physician immediately. DELAYED EFFECTS FROM LONG TERM OVEREXPOSURE. Abrading or sanding of the dry film may release crystalline silica which has been shown to cause lung damage and cancer under long term exposure. WARNING: This product contains chemicals known to the State of California to cause cancer and birth defects or other reproductive harm. DO NOT TAKE INTERNALLY. KEEP OUT OF THE REACH OF CHILDREN.
HOTW 09/24/2008 A24W00300 23 00

The information and recommendations set forth in this Product Data Sheet are based upon tests conducted by or on behalf of The Sherwin-Williams Company. Such information and recommendations set forth herein are subject to change and pertain to the product offered at the time of publication. Consult your Sherwin-Williams representative to obtain the most recent Product Data Sheet.

MATERIAL SAFETY DATA SHEET

A24W300
24 00

DATE OF PREPARATION
May 3, 2009

SECTION 1 — PRODUCT AND COMPANY IDENTIFICATION

PRODUCT NUMBER
A24W300
PRODUCT NAME
LOXON® Masonry Coatings System Exterior Acrylic Primer, White
MANUFACTURER'S NAME
THE SHERWIN-WILLIAMS COMPANY
101 Prospect Avenue N.W.
Cleveland, OH 44115

Telephone Numbers and Websites

Product Information	www.sherwin-williams.com
Regulatory Information	(216) 566-2902 www.paintdocs.com
Medical Emergency	(216) 566-2917
Transportation Emergency*	(800) 424-9300
**for Chemical Emergency ONLY (spill, leak, fire, exposure, or accident)*	

SECTION 2 — COMPOSITION/INFORMATION ON INGREDIENTS

% by Weight	CAS Number	Ingredient	Units	Vapor Pressure
7	14808-60-7	**Quartz**		
		ACGIH TLV	0.025 mg/m3 as Resp. Dust	
		OSHA PEL	0.1 mg/m3 as Resp. Dust	
0.1	14464-46-1	**Cristobalite**		
		ACGIH TLV	0.025 mg/m3 as Resp. Dust	
		OSHA PEL	0.05 mg/m3 as Resp. Dust	
3	12001-26-2	**Mica**		
		ACGIH TLV	3 mg/m3 as Resp. Dust	
		OSHA PEL	3 mg/m3 as Resp. Dust	
12	13463-67-7	**Titanium Dioxide**		
		ACGIH TLV	10 mg/m3 as Dust	
		OSHA PEL	10 mg/m3 Total Dust	
		OSHA PEL	5 mg/m3 Respirable Fraction	
1	1314-13-2	**Zinc Oxide**		
		ACGIH TLV	10 mg/m3 as Dust	
		OSHA PEL	10 mg/m3 Total Dust	
		OSHA PEL	5 mg/m3 Respirable Fraction	

SECTION 3 — HAZARDS IDENTIFICATION

HMIS Codes

Health	1*
Flammability	0
Reactivity	0

ROUTES OF EXPOSURE
INHALATION of vapor or spray mist.
EYE or SKIN contact with the product, vapor or spray mist.
EFFECTS OF OVEREXPOSURE
EYES: Irritation.
SKIN: Prolonged or repeated exposure may cause irritation.
INHALATION: Irritation of the upper respiratory system.

In a confined area vapors in high concentration may cause headache, nausea or dizziness.
SIGNS AND SYMPTOMS OF OVEREXPOSURE
Redness and itching or burning sensation may indicate eye or excessive skin exposure.
MEDICAL CONDITIONS AGGRAVATED BY EXPOSURE
None generally recognized.
CANCER INFORMATION
For complete discussion of toxicology data refer to Section 11.

SECTION 4 — FIRST AID MEASURES

EYES: Flush eyes with large amounts of water for 15 minutes. Get medical attention.
SKIN: Wash affected area thoroughly with soap and water.
Remove contaminated clothing and launder before re-use.
INHALATION: If affected, remove from exposure. Restore breathing. Keep warm and quiet.
INGESTION: Do not induce vomiting. Get medical attention immediately.

SECTION 5 — FIRE FIGHTING MEASURES

FLASH POINT	LEL	UEL	FLAMMABILITY CLASSIFICATION
Not Applicable	N.A.	N.A.	Not Applicable

EXTINGUISHING MEDIA
Carbon Dioxide, Dry Chemical, Alcohol Foam
UNUSUAL FIRE AND EXPLOSION HAZARDS
Closed containers may explode (due to the build-up of pressure) when exposed to extreme heat.
During emergency conditions overexposure to decomposition products may cause a health hazard. Symptoms may not be immediately apparent. Obtain medical attention.
SPECIAL FIRE FIGHTING PROCEDURES
Full protective equipment including self-contained breathing apparatus should be used.
Water spray may be ineffective. If water is used, fog nozzles are preferable. Water may be used to cool closed containers to prevent pressure build-up and possible autoignition or explosion when exposed to extreme heat.

SECTION 6 — ACCIDENTAL RELEASE MEASURES

STEPS TO BE TAKEN IN CASE MATERIAL IS RELEASED OR SPILLED
- Remove all sources of ignition. Ventilate the area.
- Remove with inert absorbent.

SECTION 7 — HANDLING AND STORAGE

STORAGE CATEGORY
Not Applicable
PRECAUTIONS TO BE TAKEN IN HANDLING AND STORAGE
Keep container closed when not in use. Transfer only to approved containers with complete and appropriate labeling. Do not take internally. Keep out of the reach of children.

SECTION 8 — EXPOSURE CONTROLS/PERSONAL PROTECTION

PRECAUTIONS TO BE TAKEN IN USE
Use only with adequate ventilation.
Avoid contact with skin and eyes. Avoid breathing vapor and spray mist.
Wash hands after using.
This coating may contain materials classified as nuisance particulates (listed "as Dust" in Section 2) which may be present at hazardous levels only during sanding or abrading of the dried film. If no specific dusts are listed in Section 2, the applicable limits for nuisance dusts are ACGIH TLV 10 mg/m3 (total dust), 3 mg/m3 (respirable fraction), OSHA PEL 15 mg/m3 (total dust), 5 mg/m3 (respirable fraction).
Removal of old paint by sanding, scraping or other means may generate dust or fumes that contain lead. Exposure to lead dust or fumes may cause brain damage or other adverse health effects, especially in children or pregnant women. Controlling exposure to lead or other hazardous substances requires the use of proper protective equipment, such as a properly fitted respirator (NIOSH approved) and proper containment and cleanup. For more information, call the National Lead Information Center at 1-800-424-LEAD (in US) or contact your local health authority.
VENTILATION
Local exhaust preferable. General exhaust acceptable if the exposure to materials in Section 2 is maintained below applicable exposure limits. Refer to OSHA Standards 1910.94, 1910.107, 1910.108.
RESPIRATORY PROTECTION
If personal exposure cannot be controlled below applicable limits by ventilation, wear a properly fitted organic vapor/particulate respirator approved by NIOSH/MSHA for protection against materials in Section 2.
When sanding or abrading the dried film, wear a dust/mist respirator approved by NIOSH/MSHA for dust which may be generated from this product, underlying paint, or the abrasive.
PROTECTIVE GLOVES
Wear gloves which are recommended by glove supplier for protection against materials in Section 2.
EYE PROTECTION
Wear safety spectacles with unperforated sideshields.

SECTION 9 — PHYSICAL AND CHEMICAL PROPERTIES

PRODUCT WEIGHT	10.76 lb/gal	1289 g/l
SPECIFIC GRAVITY	1.29	
BOILING POINT	212 - 500 °F	100 - 260 °C
MELTING POINT	Not Available	
VOLATILE VOLUME	59%	
EVAPORATION RATE	Slower than ether	
VAPOR DENSITY	Heavier than air	
SOLUBILITY IN WATER	N.A.	
pH	9.5	

VOLATILE ORGANIC COMPOUNDS (VOC Theoretical - As Packaged)

0.80lb/gal	96g/l	Less Water and Federally Exempt Solvents
0.36lb/gal	43g/l	Emitted VOC

SECTION 10 — STABILITY AND REACTIVITY

STABILITY — Stable
CONDITIONS TO AVOID
None known.
INCOMPATIBILITY
None known.
HAZARDOUS DECOMPOSITION PRODUCTS
By fire: Carbon Dioxide, Carbon Monoxide
HAZARDOUS POLYMERIZATION
Will not occur

SECTION 11 — TOXICOLOGICAL INFORMATION

CHRONIC HEALTH HAZARDS

Crystalline Silica (Quartz, Cristobalite) is listed by IARC and NTP. Long term exposure to high levels of silica dust, which can occur only when sanding or abrading the dry film, may cause lung damage (silicosis) and possibly cancer.

IARC's Monograph No. 93 reports there is sufficient evidence of carcinogenicity in experimental rats exposed to titanium dioxide but inadequate evidence for carcinogenicity in humans and has assigned a Group 2B rating. In addition, the IARC summary concludes, "No significant exposure to titanium dioxide is thought to occur during the use of products in which titanium is bound to other materials, such as paint."

TOXICOLOGY DATA

CAS No.	Ingredient Name			
14808-60-7	Quartz			
		LC50 RAT	4HR	Not Available
		LD50 RAT		Not Available
14464-46-1	Cristobalite			
		LC50 RAT	4HR	Not Available
		LD50 RAT		Not Available
12001-26-2	Mica			
		LC50 RAT	4HR	Not Available
		LD50 RAT		Not Available
13463-67-7	Titanium Dioxide			
		LC50 RAT	4HR	Not Available
		LD50 RAT		Not Available
1314-13-2	Zinc Oxide			
		LC50 RAT	4HR	Not Available
		LD50 RAT		Not Available

SECTION 12 — ECOLOGICAL INFORMATION

ECOTOXICOLOGICAL INFORMATION
No data available.

SECTION 13 — DISPOSAL CONSIDERATIONS

WASTE DISPOSAL METHOD

Waste from this product is not hazardous as defined under the Resource Conservation and Recovery Act (RCRA) 40 CFR 261.

Incinerate in approved facility. Do not incinerate closed container. Dispose of in accordance with Federal, State/Provincial, and Local regulations regarding pollution.

SECTION 14 — TRANSPORT INFORMATION

US Ground (DOT)
Not Regulated for Transportation.
Canada (TDG)
Not Regulated for Transportation.
IMO
Not Regulated for Transportation.

SECTION 15 — REGULATORY INFORMATION

SARA 313 *(40 CFR 372.65C)* SUPPLIER NOTIFICATION

CAS No.	CHEMICAL/COMPOUND	% by WT	% Element
	Zinc Compound	1	1.1

CALIFORNIA PROPOSITION 65
WARNING: This product contains chemicals known to the State of California to cause cancer and birth defects or other reproductive harm.
TSCA CERTIFICATION
All chemicals in this product are listed, or are exempt from listing, on the TSCA Inventory.

SECTION 16 — OTHER INFORMATION

This product has been classified in accordance with the hazard criteria of the Canadian Controlled Products Regulations (CPR) and the MSDS contains all of the information required by the CPR.

The above information pertains to this product as currently formulated, and is based on the information available at this time. Addition of reducers or other additives to this product may substantially alter the composition and hazards of the product. Since conditions of use are outside our control, we make no warranties, express or implied, and assume no liability in connection with any use of this information.

Protective & Marine Coatings

DTM Acrylic Coating

09910-002
200.200 W.O. 12

B66-100 Series Gloss
B66-200 Series Semi-Gloss

Revised 3/09

Product Information

1.25

Product Description

DTM ACRYLIC COATING is a 100% acrylic, water reducible, corrosion resistant coating for light to moderate industrial use. Designed for new construction or maintenance use and can be used directly over prepared substrates.

- Chemical resistant
- Corrosion resistant
- Fast dry
- Low odor, Low VOC
- Flash rust/early rust resistant
- Interior/exterior use
- Single component
- Outstanding application characteristics

Product Characteristics

Finish: Gloss or Semi-Gloss

Color: Wide range of colors including safety colors

Volume Solids: 38% ± 2%, may vary by color

Weight Solids: 50% ± 2%, may vary by color

VOC (EPA Method 24): <250 g/L; 2.08 lb/gal

Recommended Spreading Rate per coat:

	Minimum	Maximum
Wet mils (microns)	**6.5** (165)	**10.0** (250)
Dry mils (microns)	**2.5** (63)	**4.0** (100)
–Coverage sq ft/gal (m^2/L)	**155** (3.8)	**250** (6.1)
Theoretical coverage sq ft/gal (m^2/L) @ 1 mil / 25 microns dft	**608** (14.9)	

NOTE: Brush or roll application may require multiple coats to achieve maximum film thickness and uniformity of appearance.

Drying Schedule @ 8.0 mils (200 microns):

	@ 50°F/10°C	@ 77°F/25°C 50% RH	@ 110°F/43°C
To touch:	1.5 hours	1 hour	30 minutes
Tack free:	6 hours	4 hours	2 hours
To recoat:	6 hours	4 hours	2 hours
To cure:	30 days	30 days	30 days

Drying time is temperature, humidity, and film thickness dependent.

Shelf Life: 36 months, unopened
Store indoors at 40°F (4.5°C) to 100°F (38°C).

Flash Point: >200°F (93°C), PMCC

Reducer/Clean Up: Water

Recommended Uses

For use over prepared:
- Steel
- Galvanizing
- Wood
- Aluminum
- Concrete
- Masonry
- Drywall
- Zinc rich primers
- Water treatment plants

Examples:
- Buildings
- Equipment
- New Construction
- Machinery
- Piping
- Select Marine Structures
- Power plants
- Structural Steel
- Water treatment plants
- Storage Tank Exteriors
- Suitable for use in USDA inspected facilities
- Conforms to AWWA D102-03 OCS #3
- Acceptable for use in high performance architectural applications.

Performance Characteristics

Substrate*: Steel
Surface Preparation*: SSPC-SP10
System Tested*: 1 ct. DTM Acrylic Coating @ 3.0 mils (75 microns)
*unless otherwise noted below

Test Name	Test Method	Results
Abrasion Resistance	ASTM D4060, CS17 wheel, 1000 cycles, 1kg load	107 mg loss
Accelerated Weathering	ASTM D4587, QUV-A, 5,000 hours	Passes
Adhesion	ASTM D4541	>500 psi
Corrosion Weathering	ASTM D5894, 15 cycles, 5,040 hours	Rating 9 per ASTM D610 for rusting ; Rating10 per ASTM D714 for blistering
Direct Impact Resistance	ASTM D2794	>160 in. lbs.
Dry Heat Resistance	ASTM D2485	300°F (149°C)
Exterior Durability	1 year, 45° South	Excellent
Flexibility	ASTM D522, 180° bend, 1/8" mandrel	Passes
Moisture Condensation Resistance (2 coats)	ASTM D4585, 100°F (38°C), 300 hours	Passes
Pencil Hardness	ASTM D3363	2B
Salt Fog Resistance	ASTM B117, 500 hours	Excellent
Flame Spread Rating	ASTM E84-91a	Flame Spread Index - 5 ; Smoke Density Index - 0

Provides performance comparable to products formulated to federal specification: AA50570, and Paint Specification: SSPC-Paint 23 and 24.

continued on back

Protective & Marine Coatings

DTM Acrylic Coating

B66-100 Series Gloss
B66-200 Series Semi-Gloss

Product Information

1.25

Recommended Systems

		Dry Film Thickness (DFT) Mils	(Microns)
Steel:			
1 ct.	DTM Acrylic Primer/Finish	2.5-5.0	(63-125)
or	Kem Bond HS	2.0-5.0	(63-125)
or	Zinc Clad Primer	3.0-5.0	(75-125)
or	ProCryl Primer	2.0-4.0	(50-100)
2 cts.	DTM Acrylic Coating	2.5-4.0	(63-100)
Steel:			
2 cts.	DTM Acrylic Coating*	2.5-4.0	(63-100)
(Application of coating on unprimed bare steel may cause pinpoint rusting.)			
Aluminum:			
2 cts.	DTM Acrylic Coating	2.5-4.0	(63-100)
Aluminum:			
1 ct.	DTM Wash Primer	0.7-1.3	(18-32)
2 cts.	DTM Acrylic Coating	2.5-4.0	(63-100)
Galvanizing:			
2 cts.	DTM Acrylic Coating	2.5-4.0	(63-100)
Concrete Block:			
1 ct.	Heavy Duty Block Filler	10.0-18.0	(250-450)
2 cts.	DTM Acrylic Coating	2.5-4.0	(63-100)
Concrete/Masonry:			
2 cts.	DTM Acrylic Coating	2.5-4.0	(63-100)
Drywall:			
1 ct.	PrepRite 200 Latex Primer	1.0-1.5	(25-38)
2 cts.	DTM Acrylic Coating	2.5-4.0	(63-100)
Prefinished Siding: (Baked-on finishes)			
1 ct.	DTM Bonding Primer	2.0-5.0	(50-125)
2 cts.	DTM Acrylic Coating	2.5-4.0	(63-100)
Wood, exterior:			
1 ct.	A-100 Exterior Oil Wood Primer	1.5	(38)
2 cts.	DTM Acrylic Coating	2.5-4.0	(63-100)
Wood, Interior:			
1 ct.	PrepRite Wall & Wood Primer	1.5	(38)
2 cts.	DTM Acrylic Coating	2.5-4.0	(63-100)

*Safety Colors, Deep Base, and Ultradeep colors require a prime coat of DTM Acrylic Primer/Finish, B66W1, for maximum durability, adhesion, and corrosion protection.

The systems listed above are representative of the product's use, other systems may be appropriate.

Disclaimer

The information and recommendations set forth in this Product Data Sheet are based upon tests conducted by or on behalf of The Sherwin-Williams Company. Such information and recommendations set forth herein are subject to change and pertain to the product offered at the time of publication. Consult your Sherwin-Williams representative to obtain the most recent Product Data Information and Application Bulletin.

Surface Preparation

Surface must be clean, dry, and in sound condition. Remove all oil, dust, grease, dirt, loose rust, and other foreign material to ensure adequate adhesion.

Do not use hydrocarbon solvents for cleaning.

Refer to product Application Bulletin for detailed surface preparation information.

Minimum recommended surface preparation:

Iron & Steel:	SSPC-SP2
Aluminum:	SSPC-SP1
Galvanizing:	SSPC-SP1
Concrete & Masonry:	SSPC-SP13/NACE6 or ICRI 03732, CSP 1-3
Wood:	Dry and sanded smooth. Primer required.

*Safety Colors, Deep Base, and Ultradeep colors require a prime coat of DTM Acrylic Primer/Finish, B66W1, for maximum durability, adhesion, and corrosion protection.

Surface Preparation Standards

	Condition of Surface	ISO 8501-1 BS7079:A1	Swedish Std. SIS055900	SSPC	NACE
White Metal		Sa 3	Sa 3	SP 5	1
Near White Metal		Sa 2.5	Sa 2.5	SP 10	2
Commercial Blast		Sa 2	Sa 2	SP 6	3
Brush-Off Blast		Sa 1	Sa 1	SP 7	4
Hand Tool Cleaning	Rusted	C St 2	C St 2	SP 2	-
	Pitted & Rusted	D St 2	D St 2	SP 2	-
Power Tool Cleaning	Rusted	C St 3	C St 3	SP 3	-
	Pitted & Rusted	D St 3	D St 3	SP 3	-

Tinting

Tint with Blend-A-Color Toner or EnviroToner at 100% tint strength, using the respective tinting formula pages. Better performance will be achieved with EnviroToners. Five minutes minimum mixing on a mechanical shaker is required for complete mixing of color.

Tinting with Blend-A-Color can affect the flash/early rust resistance of the coating.

Application Conditions

Temperature:	50°F (10°C) minimum, 110°F (43°C) maximum (air, surface, and material)
	At least 5°F (2.8°C) above dew point
Relative humidity:	85% maximum

Refer to product Application Bulletin for detailed application information.

Ordering Information

Packaging:	1 (3.78L) and 5 gallon (18.9L) containers
Weight:	10.2 ± 0.2 lb/gl 1.22 Kg/L
	May vary by color.

Safety Precautions

Refer to the MSDS sheet before use.

Published technical data and instructions are subject to change without notice. Contact your Sherwin-Williams representative for additional technical data and instructions.

Warranty

The Sherwin-Williams Company warrants our products to be free of manufacturing defects in accord with applicable Sherwin-Williams quality control procedures. Liability for products proven defective, if any, is limited to replacement of the defective product or the refund of the purchase price paid for the defective product as determined by Sherwin-Williams. NO OTHER WARRANTY OR GUARANTEE OF ANY KIND IS MADE BY SHERWIN-WILLIAMS, EXPRESSED OR IMPLIED, STATUTORY, BY OPERATION OF LAW OR OTHERWISE, INCLUDING MERCHANTABILITY AND FITNESS FOR A PARTICULAR PURPOSE.

MATERIAL SAFETY DATA SHEET

B66W200
11 00

DATE OF PREPARATION
May 23, 2009

SECTION 1 — PRODUCT AND COMPANY IDENTIFICATION

PRODUCT NUMBER
B66W200
PRODUCT NAME
DTM ACRYLIC Semi-Gloss Acrylic Coating, Ultra White
MANUFACTURER'S NAME
THE SHERWIN-WILLIAMS COMPANY
101 Prospect Avenue N.W.
Cleveland, OH 44115

Telephone Numbers and Websites

Product Information	www.sherwin-williams.com
Regulatory Information	(216) 566-2902 www.paintdocs.com
Medical Emergency	(216) 566-2917
Transportation Emergency*	(800) 424-9300

**for Chemical Emergency ONLY (spill, leak, fire, exposure, or accident)*

SECTION 2 — COMPOSITION/INFORMATION ON INGREDIENTS

% by Weight	CAS Number	Ingredient	Units	Vapor Pressure
4	111-77-3	**2-(2-Methoxyethoxy)-ethanol**		
		ACGIH TLV	Not Available	1 mm
		OSHA PEL	Not Available	
0.1	14464-46-1	**Cristobalite**		
		ACGIH TLV	0.025 mg/m3 as Resp. Dust	
		OSHA PEL	0.05 mg/m3 as Resp. Dust	
23	13463-67-7	**Titanium Dioxide**		
		ACGIH TLV	10 mg/m3 as Dust	
		OSHA PEL	10 mg/m3 Total Dust	
		OSHA PEL	5 mg/m3 Respirable Fraction	

SECTION 3 — HAZARDS IDENTIFICATION

ROUTES OF EXPOSURE
INHALATION of vapor or spray mist.
EYE or SKIN contact with the product, vapor or spray mist.
EFFECTS OF OVEREXPOSURE
EYES: Irritation.
SKIN: Prolonged or repeated exposure may cause irritation.
INHALATION: Irritation of the upper respiratory system.

In a confined area vapors in high concentration may cause headache, nausea or dizziness.
SIGNS AND SYMPTOMS OF OVEREXPOSURE
Redness and itching or burning sensation may indicate eye or excessive skin exposure.
MEDICAL CONDITIONS AGGRAVATED BY EXPOSURE
None generally recognized.
CANCER INFORMATION
For complete discussion of toxicology data refer to Section 11.

HMIS Codes

Health	2*
Flammability	0
Reactivity	0

SECTION 4 — FIRST AID MEASURES

EYES: Flush eyes with large amounts of water for 15 minutes. Get medical attention.
SKIN: Wash affected area thoroughly with soap and water.
Remove contaminated clothing and launder before re-use.
INHALATION: If affected, remove from exposure. Restore breathing. Keep warm and quiet.
INGESTION: Do not induce vomiting. Get medical attention immediately.

SECTION 5 — FIRE FIGHTING MEASURES

FLASH POINT	LEL	UEL	FLAMMABILITY CLASSIFICATION
Not Applicable	N.A.	N.A.	Not Applicable

EXTINGUISHING MEDIA

Carbon Dioxide, Dry Chemical, Alcohol Foam

UNUSUAL FIRE AND EXPLOSION HAZARDS

Closed containers may explode (due to the build-up of pressure) when exposed to extreme heat.

During emergency conditions overexposure to decomposition products may cause a health hazard. Symptoms may not be immediately apparent. Obtain medical attention.

SPECIAL FIRE FIGHTING PROCEDURES

Full protective equipment including self-contained breathing apparatus should be used.

Water spray may be ineffective. If water is used, fog nozzles are preferable. Water may be used to cool closed containers to prevent pressure build-up and possible autoignition or explosion when exposed to extreme heat.

SECTION 6 — ACCIDENTAL RELEASE MEASURES

STEPS TO BE TAKEN IN CASE MATERIAL IS RELEASED OR SPILLED

- Remove all sources of ignition. Ventilate the area.
- Remove with inert absorbent.

SECTION 7 — HANDLING AND STORAGE

STORAGE CATEGORY

Not Applicable

PRECAUTIONS TO BE TAKEN IN HANDLING AND STORAGE

Keep container closed when not in use. Transfer only to approved containers with complete and appropriate labeling. Do not take internally. Keep out of the reach of children.

SECTION 8 — EXPOSURE CONTROLS/PERSONAL PROTECTION

PRECAUTIONS TO BE TAKEN IN USE

Use only with adequate ventilation.

Avoid contact with skin and eyes. Avoid breathing vapor and spray mist.

Wash hands after using.

This coating may contain materials classified as nuisance particulates (listed "as Dust" in Section 2) which may be present at hazardous levels only during sanding or abrading of the dried film. If no specific dusts are listed in Section 2, the applicable limits for nuisance dusts are ACGIH TLV 10 mg/m3 (total dust), 3 mg/m3 (respirable fraction), OSHA PEL 15 mg/m3 (total dust), 5 mg/m3 (respirable fraction).

VENTILATION

Local exhaust preferable. General exhaust acceptable if the exposure to materials in Section 2 is maintained below applicable exposure limits. Refer to OSHA Standards 1910.94, 1910.107, 1910.108.

RESPIRATORY PROTECTION

If personal exposure cannot be controlled below applicable limits by ventilation, wear a properly fitted organic vapor/particulate respirator approved by NIOSH/MSHA for protection against materials in Section 2.

When sanding or abrading the dried film, wear a dust/mist respirator approved by NIOSH/MSHA for dust which may be generated from this product, underlying paint, or the abrasive.

PROTECTIVE GLOVES

Wear gloves which are recommended by glove supplier for protection against materials in Section 2.

EYE PROTECTION

Wear safety spectacles with unperforated sideshields.

SECTION 9 — PHYSICAL AND CHEMICAL PROPERTIES

PRODUCT WEIGHT	10.66 lb/gal	1277 g/l
SPECIFIC GRAVITY	1.28	
BOILING POINT	212 - 500 °F	100 - 260 °C
MELTING POINT	Not Available	
VOLATILE VOLUME	60%	
EVAPORATION RATE	Slower than ether	
VAPOR DENSITY	Heavier than air	
SOLUBILITY IN WATER	N.A.	
pH	9.5	

VOLATILE ORGANIC COMPOUNDS (VOC Theoretical - As Packaged)

1.44lb/gal	173g/l	Less Water and Federally Exempt Solvents
0.69lb/gal	83g/l	Emitted VOC

SECTION 10 — STABILITY AND REACTIVITY

STABILITY — Stable
CONDITIONS TO AVOID
None known.
INCOMPATIBILITY
None known.
HAZARDOUS DECOMPOSITION PRODUCTS
By fire: Carbon Dioxide, Carbon Monoxide
HAZARDOUS POLYMERIZATION
Will not occur

SECTION 11 — TOXICOLOGICAL INFORMATION

CHRONIC HEALTH HAZARDS
Crystalline Silica (Quartz, Cristobalite) is listed by IARC and NTP. Long term exposure to high levels of silica dust, which can occur only when sanding or abrading the dry film, may cause lung damage (silicosis) and possibly cancer.
IARC's Monograph No. 93 reports there is sufficient evidence of carcinogenicity in experimental rats exposed to titanium dioxide but inadequate evidence for carcinogenicity in humans and has assigned a Group 2B rating. In addition, the IARC summary concludes, "No significant exposure to titanium dioxide is thought to occur during the use of products in which titanium is bound to other materials, such as paint."
TOXICOLOGY DATA

CAS No.	Ingredient Name			
111-77-3	2-(2-Methoxyethoxy)-ethanol			
		LC50 RAT	4HR	Not Available
		LD50 RAT		5500 mg/kg
14464-46-1	Cristobalite			
		LC50 RAT	4HR	Not Available
		LD50 RAT		Not Available
13463-67-7	Titanium Dioxide			
		LC50 RAT	4HR	Not Available
		LD50 RAT		Not Available

SECTION 12 — ECOLOGICAL INFORMATION

ECOTOXICOLOGICAL INFORMATION
No data available.

SECTION 13 — DISPOSAL CONSIDERATIONS

WASTE DISPOSAL METHOD
Waste from this product is not hazardous as defined under the Resource Conservation and Recovery Act (RCRA) 40 CFR 261.
Incinerate in approved facility. Do not incinerate closed container. Dispose of in accordance with Federal, State/Provincial, and Local regulations regarding pollution.

SECTION 14 — TRANSPORT INFORMATION

US Ground (DOT)
Not Regulated for Transportation.
Canada (TDG)
Not Regulated for Transportation.
IMO
Not Regulated for Transportation.

SECTION 15 — REGULATORY INFORMATION

SARA 313 *(40 CFR 372.65C)* SUPPLIER NOTIFICATION

CAS No.	CHEMICAL/COMPOUND	% by WT	% Element
	Glycol Ethers	4	

CALIFORNIA PROPOSITION 65
WARNING: This product contains chemicals known to the State of California to cause cancer and birth defects or other reproductive harm.
TSCA CERTIFICATION
All chemicals in this product are listed, or are exempt from listing, on the TSCA Inventory.

SECTION 16 — OTHER INFORMATION

This product has been classified in accordance with the hazard criteria of the Canadian Controlled Products Regulations (CPR) and the MSDS contains all of the information required by the CPR.

The above information pertains to this product as currently formulated, and is based on the information available at this time. Addition of reducers or other additives to this product may substantially alter the composition and hazards of the product. Since conditions of use are outside our control, we make no warranties, express or implied, and assume no liability in connection with any use of this information.

SHERWIN WILLIAMS

Protective & Marine Coatings

HEAVY DUTY BLOCK FILLER

B42W46

Revised 3/09

PRODUCT INFORMATION

1.01

PRODUCT DESCRIPTION

HEAVY DUTY BLOCK FILLER is an acrylic resin block filler for use on interior and exterior poured and precast concrete, concrete block, and cinder block.

- Excellent moisture resistance
- Excellent filling characteristics
- Suitable for use in USDA inspected facilities
- Resurface spalled and deteriorated concrete walls and ceilings
- Low odor, low VOC

PRODUCT CHARACTERISTICS

Finish:	Flat
Color:	White
Volume Solids:	53% ± 2%
Weight Solids:	73% ± 2%
VOC (EPA Method 24):	<100 g/L; 0.83 lb/gal

Recommended Spreading Rate per coat:
(varies with application, surface irregularities, and degree of sealing and filling desired.)

	Minimum	Maximum
Wet mils (microns)	18.0 450	34.0 850
Dry mils (microns)	10.0 | 250	18.0 | 450
~Coverage sq ft/gal (m^2/L)	50 | 1.2	88 | 8.2
Theoretical coverage sq ft/gal (m^2/L) @ 1 mil / 25 microns dft	848 21	

NOTE: Brush or roll application may require multiple coats to achieve maximum film thickness and uniformity of appearance.

Drying Schedule @ 18.0 mils (450 microns):

	@ 55°F/13°C	@ 77°F/25°C *50% RH*	@ 95°F/35°C
To touch:	1.5 hours	1 hour	30 minutes
To handle:	8 hours	6 hours	1 hour
To recoat:			
itself	3 hours	1 hour	30 minutes
water borne	48 hours	18 hours	6 hours
solvent borne	48 hours	48 hours	24 hours
To cure:	30 days	30 days	10 days

Drying time is temperature, humidity, and film thickness dependent.

Shelf Life: 36 months, unopened
Store indoors at 40°F (4.5°C) to 100°F (38°C).

Flash Point: >200°F (>93°C), PMCC

Reducer/Clean up: Water

RECOMMENDED USES

For use over prepared masonry surfaces in:

- Dairies
- Mining Industry
- Chemical Plants
- Hospitals
- Schools
- Bottling Plants
- Tunnels
- Paper Mills
- Jails
- Power Plants
- Equipment Foundations
- Water and Sewage Treatment Facilities
- Industrial concrete ceilings and walls
- Petroleum Refineries
- Acceptable for use in high performance architectural applications

PERFORMANCE CHARACTERISTICS

Substrate*: Concrete
Surface Preparation*: SSPC-SP3
System Tested*: 1 ct. Heavy Duty Block Filler @ 10 mils dft/ct
*unless otherwise noted below

Test Name	Test Method	Results
Adhesion	ASTM D4541	200 psi
Direct Impact	ASTM D2794	6 in. lbs.
Dry Heat Resistance	ASTM D2485	200°F (93°C)
Flexibility (cold rolled steel)	ASTM D522, 180° bend, 1" mandrel	Passes
Moisture Resistance	TT-C-555B	No failure
Pencil Hardness	ASTM D3363	5B
Thermal Shock	ASTM D2246 (5 cycles)	Excellent
Winder Driven Rain Resistance	TT-C-555b	Passes
Wet Heat Resistance	Non-immersion	120°F (49°C)

Provides performance comparable to products formulated to federal specification: TT-F-1098D Type 1

09910-003
200.200 W.O. #12

continued on back

SHERWIN WILLIAMS.

Protective & Marine Coatings

HEAVY DUTY BLOCK FILLER

B42W46

PRODUCT INFORMATION

1.01

RECOMMENDED SYSTEMS

	Dry Film Thickness (DFT) Mils	(Microns)
Untopcoated, light service interior:		
1 ct. Heavy Duty Block Filler	10.0-18.0	(250-450)
Exterior:		
2 cts. Heavy Duty Block Filler	10.0-18.0	(250-450)
Acrylic Finishes:		
1 ct. Heavy Duty Block Filler	10.0-18.0	(250-450)
2 cts. DTM Acrylic Coating	2.5-4.0	(63-100)
or Metalatex Semi-Gloss Coating	0.5-4.0	(13-100)
or Sher-Cryl HPA	2.5-4.0	(62.5-100)
Alkyd Finishes:		
1 ct. Heavy Duty Block Filler	10.0-18.0	(250-450)
2 cts. Industrial Enamel HS	2.0-4.0	(63-100)
or Metalastic DTM	3.0-5.0	(75-125)
or Waterbased Industrial Enamel	1.5-3.0	(38-75)
Catalyzed Epoxy, Solvent based:		
1 ct. Heavy Duty Block Filler	10.0-18.0	(250-450)
2 cts. Tile-Clad HS Epoxy	2.5-4.0	(63-100)
or Macropoxy 646	5.0-10.0	(125-250)
Catalyzed Epoxy, Water based:		
1 ct. Heavy Duty Block Filler	10.0-18.0	(250-450)
2 cts. Water Based Catalyzed Epoxy	2.5-4.0	(63-100)
or Waterbased Tile Clad Epoxy	2.0-4.0	(63-100)
or Pro Industrial HB Epoxy	4.0-6.0	(100-150)
Polyurethane:		
1 ct. Heavy Duty Block Filler	10.0-18.0	(250-450)
1 ct. Macropoxy 646	5.0-10.0	(125-250)
2 cts. Hi-Solids Polyurethane	3.0-4.0	(75-100)
or Sherthane 2K Urethane	2.0-4.0	(63-100)
or Acrolon 218 HS Polyurethane	3.0-6.0	(75-150)

The systems listed above are representative of the product's use, other systems may be appropriate.

DISCLAIMER

The information and recommendations set forth in this Product Data Sheet are based upon tests conducted by or on behalf of The Sherwin-Williams Company. Such information and recommendations set forth herein are subject to change and pertain to the product offered at the time of publication. Consult your Sherwin-Williams representative to obtain the most recent Product Data Information and Application Bulletin.

SURFACE PREPARATION

Surface must be clean, dry, and in sound condition. Remove all oil, dust, grease, dirt, loose rust, and other foreign material to ensure adequate adhesion.

Refer to product Application Bulletin for detailed surface preparation information.

Minimum recommended surface preparation:
Concrete & Masonry: SSPC-SP13/NACE 6,or ICRI 03732, CSP 1-3

Surface Preparation Standards

	Condition of Surface	ISO 8501-1 BS7079:A1	Swedish Std. SIS055900	SSPC	NACE
White Metal		Sa 3	Sa 3	SP 5	1
Near White Metal		Sa 2.5	Sa 2.5	SP 10	2
Commercial Blast		Sa 2	Sa 2	SP 6	3
Brush-Off Blast		Sa 1	Sa 1	SP 7	4
Hand Tool Cleaning	Rusted	C St 2	C St 2	SP 2	-
	Pitted & Rusted	D St 2	D St 2	SP 2	-
Power Tool Cleaning	Rusted	C St 3	C St 3	SP 3	-
	Pitted & Rusted	D St 3	D St 3	SP 3	-

TINTING

Do not tint.

To provide color as a guide coat, or when color is required for exterior exposure, mix 4 parts by volume of Heavy Duty Block Filler with 1 part by volume of A-100 Exterior Latex Flat, A6 series. For interior exposures, mix 4 parts by volume of Heavy Duty Block Filler with 1 part by volume of ProMar 200 Interior Latex Flat Wall Paint, B30W200 Series.

APPLICATION CONDITIONS

Temperature:	55°F (13°C) minimum, 95°F (35°C) maximum (air, surface, and material) At least 5°F (2.8°C) above dew point
Relative humidity:	85% maximum

PRODUCT CHARACTERISTICS

Packaging:	5 gallon (18.9L) containers
Weight:	14.25 ± 0.2 lb/gl 1.71 kg/L

SAFETY PRECAUTIONS

Refer to the MSDS sheet before use.

Published technical data and instructions are subject to change without notice. Contact your Sherwin-Williams representative for additional technical data and instructions.

WARRANTY

The Sherwin-Williams Company warrants our products to be free of manufacturing defects in accord with applicable Sherwin-Williams quality control procedures. Liability for products proven defective, if any, is limited to replacement of the defective product or the refund of the purchase price paid for the defective product as determined by Sherwin-Williams. NO OTHER WARRANTY OR GUARANTEE OF ANY KIND IS MADE BY SHERWIN-WILLIAMS, EXPRESSED OR IMPLIED, STATUTORY, BY OPERATION OF LAW OR OTHERWISE, INCLUDING MERCHANTABILITY AND FITNESS FOR A PARTICULAR PURPOSE.

MATERIAL SAFETY DATA SHEET

B42W46
28 00

DATE OF PREPARATION
May 23, 2009

SECTION 1 — PRODUCT AND COMPANY IDENTIFICATION

PRODUCT NUMBER
B42W46
PRODUCT NAME
Heavy Duty Block Filler
MANUFACTURER'S NAME
THE SHERWIN-WILLIAMS COMPANY
101 Prospect Avenue N.W.
Cleveland, OH 44115

Telephone Numbers and Websites

Product Information	www.sherwin-williams.com
Regulatory Information	(216) 566-2902 www.paintdocs.com
Medical Emergency	(216) 566-2917
Transportation Emergency*	(800) 424-9300
**for Chemical Emergency ONLY (spill, leak, fire, exposure, or accident)*	

SECTION 2 — COMPOSITION/INFORMATION ON INGREDIENTS

% by Weight	CAS Number	Ingredient	Units	Vapor Pressure
8	1332-58-7	Kaolin		
		ACGIH TLV	2 mg/m3 as Resp. Dust	
		OSHA PEL	10 mg/m3 Total Dust	
		OSHA PEL	5 mg/m3 Respirable Fraction	
56	471-34-1	Calcium Carbonate		
		ACGIH TLV	10 mg/m3 as Dust	
		OSHA PEL	15 mg/m3 Total Dust	
		OSHA PEL	5 mg/m3 Respirable Fraction	
0.9	13463-67-7	Titanium Dioxide		
		ACGIH TLV	10 mg/m3 as Dust	
		OSHA PEL	10 mg/m3 Total Dust	
		OSHA PEL	5 mg/m3 Respirable Fraction	

SECTION 3 — HAZARDS IDENTIFICATION

HMIS Codes

Health	1*
Flammability	0
Reactivity	0

ROUTES OF EXPOSURE
INHALATION of vapor or spray mist.
EYE or SKIN contact with the product, vapor or spray mist.
EFFECTS OF OVEREXPOSURE
EYES: Irritation.
SKIN: Prolonged or repeated exposure may cause irritation.
INHALATION: Irritation of the upper respiratory system.

In a confined area vapors in high concentration may cause headache, nausea or dizziness.
SIGNS AND SYMPTOMS OF OVEREXPOSURE
Redness and itching or burning sensation may indicate eye or excessive skin exposure.
MEDICAL CONDITIONS AGGRAVATED BY EXPOSURE
None generally recognized.
CANCER INFORMATION
For complete discussion of toxicology data refer to Section 11.

SECTION 4 — FIRST AID MEASURES

EYES: Flush eyes with large amounts of water for 15 minutes. Get medical attention.
SKIN: Wash affected area thoroughly with soap and water.
Remove contaminated clothing and launder before re-use.
INHALATION: If affected, remove from exposure. Restore breathing. Keep warm and quiet.
INGESTION: Do not induce vomiting. Get medical attention immediately.

SECTION 5 — FIRE FIGHTING MEASURES

FLASH POINT	LEL	UEL	FLAMMABILITY CLASSIFICATION
> 200 °F PMCC	N.A.	N.A.	Not Applicable

EXTINGUISHING MEDIA
Carbon Dioxide, Dry Chemical, Alcohol Foam
UNUSUAL FIRE AND EXPLOSION HAZARDS
Closed containers may explode (due to the build-up of pressure) when exposed to extreme heat.
During emergency conditions overexposure to decomposition products may cause a health hazard. Symptoms may not be immediately apparent. Obtain medical attention.
SPECIAL FIRE FIGHTING PROCEDURES
Full protective equipment including self-contained breathing apparatus should be used.
Water spray may be ineffective. If water is used, fog nozzles are preferable. Water may be used to cool closed containers to prevent pressure build-up and possible autoignition or explosion when exposed to extreme heat.

SECTION 6 — ACCIDENTAL RELEASE MEASURES

STEPS TO BE TAKEN IN CASE MATERIAL IS RELEASED OR SPILLED
- Remove all sources of ignition. Ventilate the area.
- Remove with inert absorbent.

SECTION 7 — HANDLING AND STORAGE

STORAGE CATEGORY
DOL Storage Class IIIB
PRECAUTIONS TO BE TAKEN IN HANDLING AND STORAGE
Keep container closed when not in use. Transfer only to approved containers with complete and appropriate labeling. Do not take internally. Keep out of the reach of children.

SECTION 8 — EXPOSURE CONTROLS/PERSONAL PROTECTION

PRECAUTIONS TO BE TAKEN IN USE
Use only with adequate ventilation.
Avoid contact with skin and eyes. Avoid breathing vapor and spray mist.
Wash hands after using.
This coating may contain materials classified as nuisance particulates (listed "as Dust" in Section 2) which may be present at hazardous levels only during sanding or abrading of the dried film. If no specific dusts are listed in Section 2, the applicable limits for nuisance dusts are ACGIH TLV 10 mg/m3 (total dust), 3 mg/m3 (respirable fraction), OSHA PEL 15 mg/m3 (total dust), 5 mg/m3 (respirable fraction).
VENTILATION
Local exhaust preferable. General exhaust acceptable if the exposure to materials in Section 2 is maintained below applicable exposure limits. Refer to OSHA Standards 1910.94, 1910.107, 1910.108.
RESPIRATORY PROTECTION
If personal exposure cannot be controlled below applicable limits by ventilation, wear a properly fitted organic vapor/particulate respirator approved by NIOSH/MSHA for protection against materials in Section 2.
When sanding or abrading the dried film, wear a dust/mist respirator approved by NIOSH/MSHA for dust which may be generated from this product, underlying paint, or the abrasive.
PROTECTIVE GLOVES
Wear gloves which are recommended by glove supplier for protection against materials in Section 2.
EYE PROTECTION
Wear safety spectacles with unperforated sideshields.

SECTION 9 — PHYSICAL AND CHEMICAL PROPERTIES

PRODUCT WEIGHT	14.24 lb/gal	1706 g/l
SPECIFIC GRAVITY	1.71	
BOILING POINT	212 - 213 °F	100 - 100 °C
MELTING POINT	Not Available	
VOLATILE VOLUME	47%	
EVAPORATION RATE	Slower than ether	
VAPOR DENSITY	Heavier than air	
SOLUBILITY IN WATER	N.A.	
pH	9.0	

VOLATILE ORGANIC COMPOUNDS (VOC Theoretical - As Packaged)

0.51lb/gal	61g/l	Less Water and Federally Exempt Solvents
0.28lb/gal	34g/l	Emitted VOC

SECTION 10 — STABILITY AND REACTIVITY

STABILITY — Stable
CONDITIONS TO AVOID
None known.
INCOMPATIBILITY
None known.
HAZARDOUS DECOMPOSITION PRODUCTS
By fire: Carbon Dioxide, Carbon Monoxide
HAZARDOUS POLYMERIZATION
Will not occur

SECTION 11 — TOXICOLOGICAL INFORMATION

CHRONIC HEALTH HAZARDS
IARC's Monograph No. 93 reports there is sufficient evidence of carcinogenicity in experimental rats exposed to titanium dioxide but inadequate evidence for carcinogenicity in humans and has assigned a Group 2B rating. In addition, the IARC summary concludes, "No significant exposure to titanium dioxide is thought to occur during the use of products in which titanium is bound to other materials, such as paint."

TOXICOLOGY DATA

CAS No.	Ingredient Name			
1332-58-7	Kaolin			
		LC50 RAT	4HR	Not Available
		LD50 RAT		Not Available
471-34-1	Calcium Carbonate			
		LC50 RAT	4HR	Not Available
		LD50 RAT		Not Available
13463-67-7	Titanium Dioxide			
		LC50 RAT	4HR	Not Available
		LD50 RAT		Not Available

SECTION 12 — ECOLOGICAL INFORMATION

ECOTOXICOLOGICAL INFORMATION
No data available.

SECTION 13 — DISPOSAL CONSIDERATIONS

WASTE DISPOSAL METHOD
Waste from this product is not hazardous as defined under the Resource Conservation and Recovery Act (RCRA) 40 CFR 261. Incinerate in approved facility. Do not incinerate closed container. Dispose of in accordance with Federal, State/Provincial, and Local regulations regarding pollution.

SECTION 14 — TRANSPORT INFORMATION

US Ground (DOT)
Not Regulated for Transportation.
Canada (TDG)
Not Regulated for Transportation.
IMO
Not Regulated for Transportation.

SECTION 15 — REGULATORY INFORMATION

SARA 313 *(40 CFR 372.65C)* SUPPLIER NOTIFICATION

CAS No.	CHEMICAL/COMPOUND	% by WT	% Element

No ingredients in this product are subject to SARA 313 (40 CFR 372.65C) Supplier Notification.

CALIFORNIA PROPOSITION 65

WARNING: This product contains chemicals known to the State of California to cause cancer and birth defects or other reproductive harm.

TSCA CERTIFICATION

All chemicals in this product are listed, or are exempt from listing, on the TSCA Inventory.

SECTION 16 — OTHER INFORMATION

This product has been classified in accordance with the hazard criteria of the Canadian Controlled Products Regulations (CPR) and the MSDS contains all of the information required by the CPR.

The above information pertains to this product as currently formulated, and is based on the information available at this time. Addition of reducers or other additives to this product may substantially alter the composition and hazards of the product. Since conditions of use are outside our control, we make no warranties, express or implied, and assume no liability in connection with any use of this information.

SHERWIN WILLIAMS.

Industrial & Marine Coatings

6.04

ZINC CLAD® IV

ORGANIC ZINC-RICH EPOXY PRIMER

PART U B69A8 BINDER
PART V B69V8 HARDENER

PRODUCT INFORMATION

Revised 9/05

PRODUCT DESCRIPTION

ZINC CLAD IV is a two-component, polyamide epoxy, zinc-rich coating. It has a low VOC level and contains 85% by weight of zinc dust pigment in its dried film. Meets SSPC Paint Specification #20 for zinc-rich organic primers.

- Zinc dust meets or exceeds the requirements for ASTM D520, Type II
- Meets Class A requirements for Slip Coefficient and Creep Resistance, .49
- Provides cathodic protection
- Damaged film exhibits "self-healing" properties

RECOMMENDED USES

For use over properly prepared blasted steel.

- Application to blasted steel surfaces.
- Areas exposed to fresh and salt water.
- Areas exposed to brackish water.
- Areas exposed to chemical fumes.
- Topcoating is recommended for maximum protection.

PRODUCT CHARACTERISTICS

Finish: Flat

Color: Gray-green

Volume Solids: 64% ± 2%, mixed, calculated
68% ± 2%, mixed, ASTM D2697

Weight Solids: 90% ± 2%, mixed

VOC (EPA Method 24): Unreduced: <340 g/L; 2.80 lb/gal
mixed Reduced 5%: <340 g/L; 2.80 lb/gal

Zinc Content in Dry Film: 85% by weight

Mix Ratio: 2 components, premeasured; 8:1
2.25 gallons total

Recommended Spreading Rate per coat:

Wet mils:	5.0 - 8.0
Dry mils:	3.0 - 5.0
Coverage:	205 - 345 sq ft/gal approximate

Note: Brush application is for stripe coating and small areas only.

Drying Schedule @ 5.0 mils wet @ 50% RH:

	@ 40°F	@ 77°F	@ 110°F
To touch:	45 minutes	30 minutes	15 minutes
To handle:	1½ hours	1 hour	45 minutes
To recoat*:			
minimum:	6 hours	4 hours	2 hours
maximum:	1 year	1 year	1 year
To cure:	10 days	10 days	7-10 days
Pot Life:	8 hours	6 hours	4 hours
Sweat-in-Time:	1 hour	30 minutes	15 minutes

If maximum recoat time is exceeded, abrade surface before recoating. Drying time is temperature, humidity, and film thickness dependent.
*NOTE: Film must be free of solvent, hard and firm. When rubbed with the face of a coin or knife the film should polish but not flake or chip.

Shelf Life: 18 months, unopened
Store indoors at 40°F to 100°F.

Flash Point: 80°F, PMCC, mixed

Reducer/Clean Up:
Below 80°F: MEK, R6K10
Above 80°F: Reducer #58, R7K58 or MEK, R6K10

PERFORMANCE CHARACTERISTICS

System Tested: (unless otherwise indicated)
Substrate: Steel
Surface Preparation: SSPC-SP10
1 ct. Zinc Clad IV @ 3.0 mils dft

Abrasion Resistance:
Method: ASTM D4060, CS17 wheel, 1000 cycles, 1 kg load
Result: 300 mg loss

Adhesion:
Method: ASTM D4541
Result: 1000 psi

Dry Heat Resistance:
Method: ASTM D2485
Result: 300°F

Exterior Durability:
Method: 1 year at 45° South
Result: Good

Flexibility:
Method: ASTM D522, 180° bend, 1" mandrel
Result: Passes

Moisture Condensation Resistance:
Method: ASTM D4585, 100°F, 1500 hours
Result: Excellent

Pencil Hardness:
Method: ASTM D3363
Result: 2H

Salt Fog Resistance:
Method: ASTM B117, 1500 hours
Result: Excellent

Slip Coefficient, zinc only:
Method: AISC Specification for Structural Joints Using ASTM A325 or ASTM A490 Bolts
Result: Class A, 0.49

09910-004
200.200 W.O. 12

continued on back

SHERWIN WILLIAMS.

Industrial & Marine Coatings

6.04

ZINC CLAD® IV

ORGANIC ZINC-RICH EPOXY PRIMER

PART U	B69A8	BINDER
PART V	B69V8	HARDENER

PRODUCT INFORMATION

RECOMMENDED SYSTEMS

Steel, acrylic topcoat:
1 ct. Zinc Clad IV @ 3.0 - 5.0 mils dft
2 cts. DTM Acrylic Coating @ 2.5 - 4.0 mils dft/ct
or
1 ct. Fast Clad HB Acrylic @ 5.0 - 8.0 mils dft

Steel, water based epoxy topcoat:
1 ct. Zinc Clad IV @ 3.0 - 5.0 mils dft
2 cts. Water Based Catalyzed Epoxy @ 2.5 - 4.0 mils dft/ct

Steel, catalyzed epoxy topcoat:
1 ct. Zinc Clad IV @ 3.0 - 5.0 mils dft
1-2 cts. Macropoxy HS @ 3.0 - 6.0 mils dft/ct

Steel, high build epoxy topcoat:
1 ct. Zinc Clad IV @ 3.0 - 5.0 mils dft
1-2 cts. Tile-Clad HS @ 2.5 - 4.0 mils dft

Steel, epoxy/urethane topcoat:
1 ct. Zinc Clad IV @ 3.0 - 5.0 mils dft
1 ct. Macropoxy HS @ 3.0 - 6.0 mils dft/ct
1 ct. Acrolon 218 HS Acrylic Polyurethane @ 3.0 - 6.0 mils dft/ct

Steel, polyurethane topcoat:
1 ct Zinc Clad IV @ 3.0-5.0 mils dft
1-2 cts Acrolon 218 HS @ 3.0-6.0 mils dft/ct

NOTE: 1 ct. of DTM Wash Primer can be used as an intermediate coat under recommended topcoats to prevent pinholing.

The systems listed above are representative of the product's use. Other systems may be appropriate.

SURFACE PREPARATION

Surface must be clean, dry, and in sound condition. Remove all oil, dust, grease, dirt, loose rust, and other foreign material to ensure adequate adhesion.

Refer to product Application Bulletin for detailed surface preparation information.

Minimum recommended surface preparation:

Iron & Steel:	SSPC-SP6/NACE 3, 2 mil profile or SSPC-SP12/NACE 5 WJ-2L
Galvanizing:	SSPC-SP7
Weathered Zinc Rich Primer:	Clean, dry, sound

TINTING

Do not tint.

APPLICATION CONDITIONS

Temperature:	40°F minimum, 120°F maximum (air, surface, and material) At least 5°F above dew point
Relative humidity:	85% maximum

Refer to product Application Bulletin for detailed application information.

ORDERING INFORMATION

Packaging:	2.25 gallons mixed
Part U	2 gallon kit
Part V	1 quart
Weight per gallon:	26.45 ± 0.2 lb, mixed

SAFETY PRECAUTIONS

Refer to the MSDS sheet before use.

Published technical data and instructions are subject to change without notice. Contact your Sherwin-Williams representative for additional technical data and instructions.

DISCLAIMER

The information and recommendations set forth in this Product Data Sheet are based upon tests conducted by or on behalf of The Sherwin-Williams Company. Such information and recommendations set forth herein are subject to change and pertain to the product offered at the time of publication. Consult your Sherwin-Williams representative to obtain the most recent Product Data Information and Application Bulletin.

WARRANTY

The Sherwin-Williams Company warrants our products to be free of manufacturing defects in accord with applicable Sherwin-Williams quality control procedures. Liability for products proven defective, if any, is limited to replacement of the defective product or the refund of the purchase price paid for the defective product as determined by Sherwin-Williams. NO OTHER WARRANTY OR GUARANTEE OF ANY KIND IS MADE BY SHERWIN-WILLIAMS, EXPRESSED OR IMPLIED, STATUTORY, BY OPERATION OF LAW OR OTHERWISE, INCLUDING MERCHANTABILITY AND FITNESS FOR A PARTICULAR PURPOSE.

MATERIAL SAFETY DATA SHEET

B69A8
09 00

DATE OF PREPARATION
Mar 2, 2009

SECTION 1 — PRODUCT AND COMPANY IDENTIFICATION

PRODUCT NUMBER
B69A8
PRODUCT NAME
ZINC CLAD® IV Primer (Part U), Flat/Gray-Green
MANUFACTURER'S NAME
THE SHERWIN-WILLIAMS COMPANY
101 Prospect Avenue N.W.
Cleveland, OH 44115

Telephone Numbers and Websites

Product Information	www.sherwin-williams.com
Regulatory Information	(216) 566-2902 www.paintdocs.com
Medical Emergency	(216) 566-2917
Transportation Emergency*	(800) 424-9300
**for Chemical Emergency ONLY (spill, leak, fire, exposure, or accident)*	

SECTION 2 — COMPOSITION/INFORMATION ON INGREDIENTS

% by Weight	CAS Number	Ingredient	Units		Vapor Pressure
1	100-41-4	**Ethylbenzene**			
		ACGIH TLV	100	PPM	7.1 mm
		ACGIH TLV	125	PPM STEL	
		OSHA PEL	100	PPM	
		OSHA PEL	125	PPM STEL	
6	1330-20-7	**Xylene**			
		ACGIH TLV	100	PPM	5.9 mm
		ACGIH TLV	150	PPM STEL	
		OSHA PEL	100	PPM	
		OSHA PEL	150	PPM STEL	
1	110-43-0	**Methyl n-Amyl Ketone**			
		ACGIH TLV	50	PPM	3.855 mm
		OSHA PEL	100	PPM	
4	67924-34-9	**Epoxy Polymer**			
		ACGIH TLV	Not Available		
		OSHA PEL	Not Available		
81	7440-66-6	**Zinc**			
		ACGIH TLV	Not Available		
		OSHA PEL	Not Available		
2	14808-60-7	**Quartz**			
		ACGIH TLV	0.025	mg/m3 as Resp. Dust	
		OSHA PEL	0.1	mg/m3 as Resp. Dust	

SECTION 3 — HAZARDS IDENTIFICATION

HMIS Codes

Health	2*
Flammability	3
Reactivity	1

ROUTES OF EXPOSURE
INHALATION of vapor or spray mist.
EYE or SKIN contact with the product, vapor or spray mist.
EFFECTS OF OVEREXPOSURE
EYES: Irritation.
SKIN: Prolonged or repeated exposure may cause irritation.
INHALATION: Irritation of the upper respiratory system.

May cause nervous system depression. Extreme overexposure may result in unconsciousness and possibly death.
Prolonged overexposure to solvent ingredients in Section 2 may cause adverse effects to the liver, urinary and reproductive systems.
SIGNS AND SYMPTOMS OF OVEREXPOSURE
Headache, dizziness, nausea, and loss of coordination are indications of excessive exposure to vapors or spray mists.

Redness and itching or burning sensation may indicate eye or excessive skin exposure.

MEDICAL CONDITIONS AGGRAVATED BY EXPOSURE

May cause allergic skin reaction in susceptible persons or skin sensitization.

CANCER INFORMATION

For complete discussion of toxicology data refer to Section 11.

SECTION 4 — FIRST AID MEASURES

EYES: Flush eyes with large amounts of water for 15 minutes. Get medical attention.
SKIN: Wash affected area thoroughly with soap and water.
If irritation persists or occurs later, get medical attention.
Remove contaminated clothing and launder before re-use.
INHALATION: If affected, remove from exposure. Restore breathing. Keep warm and quiet.
INGESTION: Do not induce vomiting. Get medical attention immediately.

SECTION 5 — FIRE FIGHTING MEASURES

FLASH POINT	LEL	UEL	FLAMMABILITY CLASSIFICATION
80° F PMCC	1.0	7.9	RED LABEL -- Flammable, Flash below 100° F (38 °C)

EXTINGUISHING MEDIA

Carbon Dioxide, Dry Chemical, Foam

UNUSUAL FIRE AND EXPLOSION HAZARDS

Closed containers may explode when exposed to extreme heat.
Application to hot surfaces requires special precautions.
During emergency conditions overexposure to decomposition products may cause a health hazard. Symptoms may not be immediately apparent. Obtain medical attention.

SPECIAL FIRE FIGHTING PROCEDURES

Full protective equipment including self-contained breathing apparatus should be used.
Water spray may be ineffective. If water is used, fog nozzles are preferable. Water may be used to cool closed containers to prevent pressure build-up and possible autoignition or explosion when exposed to extreme heat.

SECTION 6 — ACCIDENTAL RELEASE MEASURES

STEPS TO BE TAKEN IN CASE MATERIAL IS RELEASED OR SPILLED

- Remove all sources of ignition. Ventilate the area.
- Remove with inert absorbent.

SECTION 7 — HANDLING AND STORAGE

STORAGE CATEGORY

DOL Storage Class IC

PRECAUTIONS TO BE TAKEN IN HANDLING AND STORAGE

Contents are FLAMMABLE. Keep away from heat, sparks, and open flame.
During use and until all vapors are gone: Keep area ventilated - Do not smoke - Extinguish all flames, pilot lights, and heaters - Turn off stoves, electric tools and appliances, and any other sources of ignition.
Consult NFPA Code. Use approved Bonding and Grounding procedures.
Keep container closed when not in use. Transfer only to approved containers with complete and appropriate labeling. Do not take internally. Keep out of the reach of children.

SECTION 8 — EXPOSURE CONTROLS/PERSONAL PROTECTION

PRECAUTIONS TO BE TAKEN IN USE

Use only with adequate ventilation.
Avoid contact with skin and eyes. Avoid breathing vapor and spray mist.
Wash hands after using.
This coating may contain materials classified as nuisance particulates (listed "as Dust" in Section 2) which may be present at hazardous levels only during sanding or abrading of the dried film. If no specific dusts are listed in Section 2, the applicable limits for nuisance dusts are ACGIH TLV 10 mg/m3 (total dust), 3 mg/m3 (respirable fraction), OSHA PEL 15 mg/m3 (total dust), 5 mg/m3 (respirable fraction).

VENTILATION

Local exhaust preferable. General exhaust acceptable if the exposure to materials in Section 2 is maintained below applicable exposure limits. Refer to OSHA Standards 1910.94, 1910.107, 1910.108.

RESPIRATORY PROTECTION

If personal exposure cannot be controlled below applicable limits by ventilation, wear a properly fitted organic vapor/particulate respirator approved by NIOSH/MSHA for protection against materials in Section 2.
When sanding or abrading the dried film, wear a dust/mist respirator approved by NIOSH/MSHA for dust which may be generated from this product, underlying paint, or the abrasive.

PROTECTIVE GLOVES

Wear gloves which are recommended by glove supplier for protection against materials in Section 2.

EYE PROTECTION
Wear safety spectacles with unperforated sideshields.
OTHER PROTECTIVE EQUIPMENT
Use of barrier cream on exposed skin is recommended.
OTHER PRECAUTIONS
Intentional misuse by deliberately concentrating and inhaling the contents can be harmful or fatal.

SECTION 9 — PHYSICAL AND CHEMICAL PROPERTIES

PRODUCT WEIGHT	28.33 lb/gal	3394 g/l
SPECIFIC GRAVITY	3.41	
BOILING POINT	277 - 308° F	136 - 153° C
MELTING POINT	Not Available	
VOLATILE VOLUME	35%	
EVAPORATION RATE	Slower than ether	
VAPOR DENSITY	Heavier than air	
SOLUBILITY IN WATER	N.A.	

VOLATILE ORGANIC COMPOUNDS (VOC Theoretical - As Packaged)

2.56lb/gal	307g/l	Less Water and Federally Exempt Solvents
2.56lb/gal	307g/l	Emitted VOC

SECTION 10 — STABILITY AND REACTIVITY

STABILITY — Stable
CONDITIONS TO AVOID
None known.
INCOMPATIBILITY
Contamination with Water, Acids, or Alkalis can cause evolution of hydrogen, which may result in dangerously increased pressures in closed containers.
HAZARDOUS DECOMPOSITION PRODUCTS
By fire: Carbon Dioxide, Carbon Monoxide
HAZARDOUS POLYMERIZATION
Will not occur

SECTION 11 — TOXICOLOGICAL INFORMATION

CHRONIC HEALTH HAZARDS
Reports have associated repeated and prolonged overexposure to solvents with permanent brain and nervous system damage.
Ethylbenzene is classified by IARC as possibly carcinogenic to humans (2B) based on inadequate evidence in humans and sufficient evidence in laboratory animals. Lifetime inhalation exposure of rats and mice to high ethylbenzene concentrations resulted in increases in certain types of cancer, including kidney tumors in rats and lung and liver tumors in mice. These effects were not observed in animals exposed to lower concentrations. There is no evidence that ethylbenzene causes cancer in humans.
Crystalline Silica (Quartz, Cristobalite) is listed by IARC and NTP. Long term exposure to high levels of silica dust, which can occur only when sanding or abrading the dry film, may cause lung damage (silicosis) and possibly cancer.

TOXICOLOGY DATA

CAS No.	Ingredient Name			
100-41-4	Ethylbenzene			
		LC50 RAT	4HR	Not Available
		LD50 RAT		3500 mg/kg
1330-20-7	Xylene			
		LC50 RAT	4HR	5000 ppm
		LD50 RAT		4300 mg/kg
110-43-0	Methyl n-Amyl Ketone			
		LC50 RAT	4HR	Not Available
		LD50 RAT		1670 mg/kg
67924-34-9	Epoxy Polymer			
		LC50 RAT	4HR	Not Available
		LD50 RAT		Not Available
7440-66-6	Zinc			
		LC50 RAT	4HR	Not Available
		LD50 RAT		Not Available
14808-60-7	Quartz			
		LC50 RAT	4HR	Not Available
		LD50 RAT		Not Available

SECTION 12 — ECOLOGICAL INFORMATION

ECOTOXICOLOGICAL INFORMATION
No data available.

SECTION 13 — DISPOSAL CONSIDERATIONS

WASTE DISPOSAL METHOD
Waste from this product may be hazardous as defined under the Resource Conservation and Recovery Act (RCRA) 40 CFR 261.
Waste must be tested for ignitability to determine the applicable EPA hazardous waste numbers.
Incinerate in approved facility. Do not incinerate closed container. Dispose of in accordance with Federal, State/Provincial, and Local regulations regarding pollution.

SECTION 14 — TRANSPORT INFORMATION

US Ground (DOT)
1 Gallon and Less may be Classed as CONSUMER COMMODITY, ORM-D
Larger Containers are Regulated as:
UN1263, PAINT, 3, PG III, (ERG#128)
DOT (Dept of Transportation) Hazardous Substances & Reportable Quantities
Ethyl benzene 1000 lb RQ
Xylenes (isomers and mixture) 100 lb RQ
Zinc 1000 lb RQ
Bulk Containers may be Shipped as (check reportable quantities):
RQ, UN1263, PAINT, 3, PG III, (ZINC, XYLENES (ISOMERS AND MIXTURE)), (ERG#128)
Canada (TDG)
UN1263, PAINT, CLASS 3, PG III, LIMITED QUANTITY, (ERG#128)
IMO
UN1263, PAINT, CLASS 3, PG III, (27 C c.c.), EmS F-E, S-E

SECTION 15 — REGULATORY INFORMATION

SARA 313 *(40 CFR 372.65C)* SUPPLIER NOTIFICATION

CAS No.	CHEMICAL/COMPOUND	% by WT	% Element
100-41-4	Ethylbenzene	1	
1330-20-7	Xylene	6	
	Zinc		79

CALIFORNIA PROPOSITION 65
WARNING: This product contains chemicals known to the State of California to cause cancer and birth defects or other reproductive harm.
TSCA CERTIFICATION
All chemicals in this product are listed, or are exempt from listing, on the TSCA Inventory.

SECTION 16 — OTHER INFORMATION

This product has been classified in accordance with the hazard criteria of the Canadian Controlled Products Regulations (CPR) and the MSDS contains all of the information required by the CPR.

The above information pertains to this product as currently formulated, and is based on the information available at this time. Addition of reducers or other additives to this product may substantially alter the composition and hazards of the product. Since conditions of use are outside our control, we make no warranties, express or implied, and assume no liability in connection with any use of this information.

MATERIAL SAFETY DATA SHEET

B69V8
03 00

DATE OF PREPARATION
Feb 25, 2009

SECTION 1 — PRODUCT AND COMPANY IDENTIFICATION

PRODUCT NUMBER
B69V8
PRODUCT NAME
ZINC CLAD™ IV Primer (Part V), Hardener
MANUFACTURER'S NAME
THE SHERWIN-WILLIAMS COMPANY
101 Prospect Avenue N.W.
Cleveland, OH 44115

Telephone Numbers and Websites

Product Information	www.sherwin-williams.com
Regulatory Information	(216) 566-2902 www.paintdocs.com
Medical Emergency	(216) 566-2917
Transportation Emergency*	(800) 424-9300
**for Chemical Emergency ONLY (spill, leak, fire, exposure, or accident)*	

SECTION 2 — COMPOSITION/INFORMATION ON INGREDIENTS

% by Weight	CAS Number	Ingredient	Units	Vapor Pressure
3	100-41-4	**Ethylbenzene**		
		ACGIH TLV	100 PPM	7.1 mm
		ACGIH TLV	125 PPM STEL	
		OSHA PEL	100 PPM	
		OSHA PEL	125 PPM STEL	
17	1330-20-7	**Xylene**		
		ACGIH TLV	100 PPM	5.9 mm
		ACGIH TLV	150 PPM STEL	
		OSHA PEL	100 PPM	
		OSHA PEL	150 PPM STEL	
5	90-72-2	**Tri(dimethylaminomethyl)phenol**		
		ACGIH TLV	Not Available	
		OSHA PEL	Not Available	
29	68410-23-1	**Polyamide**		
		ACGIH TLV	Not Available	
		OSHA PEL	Not Available	
37	14808-60-7	**Quartz**		
		ACGIH TLV	0.025 mg/m3 as Resp. Dust	
		OSHA PEL	0.1 mg/m3 as Resp. Dust	

SECTION 3 — HAZARDS IDENTIFICATION

ROUTES OF EXPOSURE
INHALATION of vapor or spray mist.
EYE or SKIN contact with the product, vapor or spray mist.

HMIS Codes

Health	3*
Flammability	3
Reactivity	0

EFFECTS OF OVEREXPOSURE
EYES: Causes burns.
SKIN: Causes burns.
INHALATION: Causes burns of the upper respiratory system.

May cause nervous system depression. Extreme overexposure may result in unconsciousness and possibly death.
Prolonged overexposure to solvent ingredients in Section 2 may cause adverse effects to the liver, urinary and reproductive systems.

SIGNS AND SYMPTOMS OF OVEREXPOSURE
Headache, dizziness, nausea, and loss of coordination are indications of excessive exposure to vapors or spray mists.
Redness and itching or burning sensation may indicate eye or excessive skin exposure.

MEDICAL CONDITIONS AGGRAVATED BY EXPOSURE
May cause allergic skin reaction in susceptible persons or skin sensitization.

CANCER INFORMATION
For complete discussion of toxicology data refer to Section 11.

SECTION 4 — FIRST AID MEASURES

EYES: Flush eyes with large amounts of water for 15 minutes. Get medical attention **IMMEDIATELY**.
SKIN: Wash affected area thoroughly with soap and water.
If irritation persists or occurs later, get medical attention.
Remove contaminated clothing and launder before re-use.
INHALATION: If affected, remove from exposure. Restore breathing. Keep warm and quiet.
INGESTION: Do not induce vomiting. Get medical attention immediately.

SECTION 5 — FIRE FIGHTING MEASURES

FLASH POINT	LEL	UEL	FLAMMABILITY CLASSIFICATION
80° F PMCC	1.0	7.0	RED LABEL -- Flammable, Flash below 100° F (38 °C)

EXTINGUISHING MEDIA
Carbon Dioxide, Dry Chemical, Foam
UNUSUAL FIRE AND EXPLOSION HAZARDS
Closed containers may explode when exposed to extreme heat.
Application to hot surfaces requires special precautions.
During emergency conditions overexposure to decomposition products may cause a health hazard. Symptoms may not be immediately apparent. Obtain medical attention.
SPECIAL FIRE FIGHTING PROCEDURES
Full protective equipment including self-contained breathing apparatus should be used.
Water spray may be ineffective. If water is used, fog nozzles are preferable. Water may be used to cool closed containers to prevent pressure build-up and possible autoignition or explosion when exposed to extreme heat.

SECTION 6 — ACCIDENTAL RELEASE MEASURES

STEPS TO BE TAKEN IN CASE MATERIAL IS RELEASED OR SPILLED
- Remove all sources of ignition. Ventilate the area.
- Remove with inert absorbent.

SECTION 7 — HANDLING AND STORAGE

STORAGE CATEGORY
DOL Storage Class IC
PRECAUTIONS TO BE TAKEN IN HANDLING AND STORAGE
Contents are FLAMMABLE. Keep away from heat, sparks, and open flame.
During use and until all vapors are gone: Keep area ventilated - Do not smoke - Extinguish all flames, pilot lights, and heaters - Turn off stoves, electric tools and appliances, and any other sources of ignition.
Consult NFPA Code. Use approved Bonding and Grounding procedures.
Keep container closed when not in use. Transfer only to approved containers with complete and appropriate labeling. Do not take internally. Keep out of the reach of children.

SECTION 8 — EXPOSURE CONTROLS/PERSONAL PROTECTION

PRECAUTIONS TO BE TAKEN IN USE
Use only with adequate ventilation.
Do not get in eyes, or on skin or clothing. Do not breathe vapor or spray mist.
Wash hands after using.
This coating may contain materials classified as nuisance particulates (listed "as Dust" in Section 2) which may be present at hazardous levels only during sanding or abrading of the dried film. If no specific dusts are listed in Section 2, the applicable limits for nuisance dusts are ACGIH TLV 10 mg/m3 (total dust), 3 mg/m3 (respirable fraction), OSHA PEL 15 mg/m3 (total dust), 5 mg/m3 (respirable fraction).
VENTILATION
Local exhaust preferable. General exhaust acceptable if the exposure to materials in Section 2 is maintained below applicable exposure limits. Refer to OSHA Standards 1910.94, 1910.107, 1910.108.
RESPIRATORY PROTECTION
If personal exposure cannot be controlled below applicable limits by ventilation, wear a properly fitted organic vapor/particulate respirator approved by NIOSH/MSHA for protection against materials in Section 2.
When sanding or abrading the dried film, wear a dust/mist respirator approved by NIOSH/MSHA for dust which may be generated from this product, underlying paint, or the abrasive.
PROTECTIVE GLOVES
To prevent skin contact, wear gloves which are recommended by glove supplier for protection against materials in Section 2.
EYE PROTECTION
To prevent eye contact, wear safety spectacles with unperforated sideshields.

OTHER PROTECTIVE EQUIPMENT
Use barrier cream on exposed skin.
OTHER PRECAUTIONS
Intentional misuse by deliberately concentrating and inhaling the contents can be harmful or fatal.

SECTION 9 — PHYSICAL AND CHEMICAL PROPERTIES

PRODUCT WEIGHT	11.10 lb/gal	1329 g/l
SPECIFIC GRAVITY	1.34	
BOILING POINT	277 - 292° F	136 - 144° C
MELTING POINT	Not Available	
VOLATILE VOLUME	30%	
EVAPORATION RATE	Slower than ether	
VAPOR DENSITY	Heavier than air	
SOLUBILITY IN WATER	N.A.	

VOLATILE ORGANIC COMPOUNDS (VOC Theoretical - As Packaged)

2.22lb/gal	266g/l	Less Water and Federally Exempt Solvents
2.22lb/gal	266g/l	Emitted VOC

SECTION 10 — STABILITY AND REACTIVITY

STABILITY — Stable
CONDITIONS TO AVOID
None known.
INCOMPATIBILITY
None known.
HAZARDOUS DECOMPOSITION PRODUCTS
By fire: Carbon Dioxide, Carbon Monoxide
HAZARDOUS POLYMERIZATION
Will not occur

SECTION 11 — TOXICOLOGICAL INFORMATION

CHRONIC HEALTH HAZARDS
Reports have associated repeated and prolonged overexposure to solvents with permanent brain and nervous system damage.
Ethylbenzene is classified by IARC as possibly carcinogenic to humans (2B) based on inadequate evidence in humans and sufficient evidence in laboratory animals. Lifetime inhalation exposure of rats and mice to high ethylbenzene concentrations resulted in increases in certain types of cancer, including kidney tumors in rats and lung and liver tumors in mice. These effects were not observed in animals exposed to lower concentrations. There is no evidence that ethylbenzene causes cancer in humans.
Crystalline Silica (Quartz, Cristobalite) is listed by IARC and NTP. Long term exposure to high levels of silica dust, which can occur only when sanding or abrading the dry film, may cause lung damage (silicosis) and possibly cancer.

TOXICOLOGY DATA

CAS No.	Ingredient Name			
100-41-4	Ethylbenzene			
		LC50 RAT	4HR	Not Available
		LD50 RAT		3500 mg/kg
1330-20-7	Xylene			
		LC50 RAT	4HR	5000 ppm
		LD50 RAT		4300 mg/kg
90-72-2	Tri(dimethylaminomethyl)phenol			
		LC50 RAT	4HR	Not Available
		LD50 RAT		1653 mg/kg
68410-23-1	Polyamide			
		LC50 RAT	4HR	Not Available
		LD50 RAT		Not Available
14808-60-7	Quartz			
		LC50 RAT	4HR	Not Available
		LD50 RAT		Not Available

SECTION 12 — ECOLOGICAL INFORMATION

ECOTOXICOLOGICAL INFORMATION
No data available.

SECTION 13 — DISPOSAL CONSIDERATIONS

WASTE DISPOSAL METHOD

Waste from this product may be hazardous as defined under the Resource Conservation and Recovery Act (RCRA) 40 CFR 261.
Waste must be tested for ignitability to determine the applicable EPA hazardous waste numbers.
Incinerate in approved facility. Do not incinerate closed container. Dispose of in accordance with Federal, State/Provincial, and Local regulations regarding pollution.

SECTION 14 — TRANSPORT INFORMATION

US Ground (DOT)

1 Gallon and Less may be Classed as CONSUMER COMMODITY, ORM-D
Larger Containers are Regulated as:
UN1263, PAINT, 3, PG III, (ERG#128)

DOT (Dept of Transportation) Hazardous Substances & Reportable Quantities

Ethyl benzene 1000 lb RQ
Xylenes (isomers and mixture) 100 lb RQ

Bulk Containers may be Shipped as (check reportable quantities):

RQ, UN1263, PAINT, 3, PG III, (XYLENES (ISOMERS AND MIXTURE)), (ERG#128)

Canada (TDG)

UN1263, PAINT, CLASS 3, PG III, LIMITED QUANTITY, (ERG#128)

IMO

UN1263, PAINT, CLASS 3, PG III, (27 C c.c.), EmS F-E, S-E

SECTION 15 — REGULATORY INFORMATION

SARA 313 *(40 CFR 372.65C)* SUPPLIER NOTIFICATION

CAS No.	CHEMICAL/COMPOUND	% by WT	% Element
100-41-4	Ethylbenzene	3	
1330-20-7	Xylene	17	

CALIFORNIA PROPOSITION 65

WARNING: This product contains chemicals known to the State of California to cause cancer and birth defects or other reproductive harm.

TSCA CERTIFICATION

All chemicals in this product are listed, or are exempt from listing, on the TSCA Inventory.

SECTION 16 — OTHER INFORMATION

This product has been classified in accordance with the hazard criteria of the Canadian Controlled Products Regulations (CPR) and the MSDS contains all of the information required by the CPR.

The above information pertains to this product as currently formulated, and is based on the information available at this time. Addition of reducers or other additives to this product may substantially alter the composition and hazards of the product. Since conditions of use are outside our control, we make no warranties, express or implied, and assume no liability in connection with any use of this information.

09910-005

200.200 W.O. 12

5.22

SHERWIN WILLIAMS.

Industrial & Marine Coatings

ACROLON™ 218 HS
ACRYLIC POLYURETHANE

PART A	B65-600	GLOSS SERIES
PART A	B65-650	SEMI-GLOSS SERIES
PART B	B65V600	HARDENER

PRODUCT INFORMATION

Revised 2/07

PRODUCT DESCRIPTION

ACROLON 218 HS acrylic polyurethane is a VOC compliant, polyester modified, aliphatic, acrylic polyurethane formulated specifically for in-shop applications. Also suitable for industrial applications. A fast drying, high gloss urethane that provides color and gloss retention for exterior exposure.

- Can be used directly over organic zinc rich primers (epoxy zinc primer and moisture cure urethane zinc primer)
- Color and gloss retention for exterior exposure
- Fast dry

RECOMMENDED USES

Specifically formulated for in-shop applications.
For use over prepared metal and masonry surfaces in industrial environments such as:

- Structural steel
- Rail cars and locomotives
- Conveyors
- Bridges
- Offshore platforms - exploration and production
- Suitable for use in USDA inspected facilities
- Tank exteriors
- Pipelines
- Ships

Conforms to AWWA D102-03, OCS #5&#6
Acceptable for use in high performance architectural applications.

PRODUCT CHARACTERISTICS

Finish: High Gloss or Semi-Gloss

Color: Wide range of colors available

Volume Solids: 65% ± 2%, mixed, may vary by color

Weight Solids: 78% ± 2%, mixed, may vary by color

VOC (EPA Method 24): mixed
Unreduced: <300 g/L; 2.5 lb/gal
Reduced 10%: <340 g/L; 2.8 lb/gal

Mix Ratio: 6:1 by volume, 1 gallon or 5 gallon mixes premeasured components

Recommended Spreading Rate per coat:

Wet mils:	4.5 - 9.0
Dry mils:	3.0 - 6.0
Coverage:	175 - 346 sq ft/gal approximate

NOTE: Brush or roll application may require multiple coats to achieve maximum film thickness and uniformity of appearance.

Drying Schedule @ 6.0 mils wet @ 50% RH:

	@50°F	@77°F	@120°F
To touch:	2 hours	30 minutes	20 minutes
To handle:	10 hours	6 hours	4 hours
To recoat:			
minimum:	12 hours	8 hours	6 hours
maximum:	3 months	3 months	3 months
To cure:	14 days	7 days	5 days

Drying time is temperature, humidity, and film thickness dependent.

Pot Life: (reduced 5% with Reducer R7K15) 4 hours | 2 hours | 45 minutes

Sweat In Time: none | none | none
If maximum recoat time is exceeded, abrade surface before recoating.

Shelf Life: Part A: 36 months, unopened
Part B: 12 months, unopened
Store indoors at 40°F to 100°F

Flash Point: 55°F, Seta, mixed

Reducer/Clean Up: Spray: Reducer R7K15
Brush/Roll: Reducer #132, R7K132

PERFORMANCE CHARACTERISTICS

System Tested: (unless otherwise indicated)
Substrate: Steel
Surface Preparation: SSPC-SP10
1 ct. Macropoxy 646 @ 6.0 mils dft
1 ct. Acrolon 218 HS Gloss @ 4.0 mils dft

Abrasion Resistance: [1]
Method: ASTM D4060, CS17 wheel, 1000 cycles, 1 kg load
Result: 43 mg loss

Adhesion:
Method: ASTM D4541
Result: 975 psi

Corrosion Weathering: [2]
Method: ASTM D5894, 9 cycles, 3024 hours
Result: Rating 10 per ASTM D610, for rusting
Rating 10 per ASTM D714, for blistering

Direct Impact Resistance: [1]
Method: ASTM D2794
Result: 50 in. lb.

Dry Heat Resistance: [1]
Method: ASTM D2485, Method A
Result: 200°F

Flexibility: [1]
Method: ASTM D522, 180° bend, 1/8" mandrel
Result: Passes

Humidity Resistance: [2]
Method: ASTM D4585, 100°F, 1500 hours
Result: Rating 10 per ASTM D610 for rusting
Rating 10 per ASTM D714 for blistering

Pencil Hardness:
Method: ASTM D3363
Result: 3H

Salt Fog Resistance: [2]
Method: ASTM B117, 7000 hours
Result: Rating 10 per ASTM D610 for rusting
Rating 9 per ASTM D714 for blistering

[1] Finish coat only tested
[2] Primer: Zinc-Clad II Plus
Intermediate: Macropoxy 646
Finish: Acrolon 218 HS

Meets the requirements of SSPC Paint No. 36, Level 3.

continued on back

SHERWIN WILLIAMS.

Industrial & Marine Coatings

5.22

ACROLON™ 218 HS
ACRYLIC POLYURETHANE

PART A	B65-600	GLOSS SERIES
PART A	B65-650	SEMI-GLOSS SERIES
PART B	B65V600	HARDENER

PRODUCT INFORMATION

RECOMMENDED SYSTEMS

Steel:
1 ct. Macropoxy 646 @ 5.0 - 10.0 mils dft
1-2 cts. Acrolon 218 HS Acrylic Polyurethane @ 3.0 - 6.0 mils dft/ct

Steel:
1 ct. Zinc Clad II Plus @ 3.0 - 5.0 mils dft
1 ct. Macropoxy 646 @ 5.0 - 10.0 mils dft
1-2 cts. Acrolon 218 HS Acrylic Polyurethane @ 3.0 - 6.0 mils dft/ct

Steel:
1 ct. Zinc Clad IV @ 3.0 - 5.0 mils dft
1-2 cts. Acrolon 218 HS Acrylic Polyurethane @ 3.0 - 6.0 mils dft/ct

Steel:
1 ct. Corothane I - GalvaPac Zinc Primer @ 3.0 - 4.0 mils dft
1-2 cts. Acrolon 218 HS Acrylic Polyurethane @ 3.0 - 6.0 mils dft/ct

Steel:
1 ct. Epoxy Mastic Aluminum II @ 6.0 mils dft
1-2 cts. Acrolon 218 HS Acrylic Polyurethane @ 3.0 - 6.0 mils dft/ct

Steel:
1 ct. Recoatable Epoxy Primer @ 4.0 - 6.0 mils dft
1-2 cts. Acrolon 218 HS Acrylic Polyurethane @ 3.0 - 6.0 mils dft/ct

Concrete/Masonry:
1 ct. Kem Cati-Coat HS Epoxy Filler/Sealer @ 10.0 - 20.0 mils dft
1-2 cts. Acrolon 218 HS Acrylic Polyurethane @ 3.0 - 6.0 mils dft/ct

Aluminum/Galvanizing:
1 ct. DTM Wash Primer @ 0.7 - 1.3 mils dft
1-2 cts. Acrolon 218 HS Acrylic Polyurethane @ 3.0 - 6.0 mils dft/ct

The systems listed above are representative of the product's use. Other systems may be appropriate.

SURFACE PREPARATION

Surface must be clean, dry, and in sound condition. Remove all oil, dust, grease, dirt, loose rust, and other foreign material to ensure adequate adhesion.

Refer to product Application Bulletin for detailed surface preparation information.

Minimum recommended surface preparation:

* Iron & Steel:	SSPC-SP6/NACE 3, 1-2 mils pro file
* Galvanizing:	SSPC-SP1
* Concrete & Masonry:	SSPC-SP13/NACE 6, or ICRI 03732, CSP 1-3

* Primer required

TINTING

Tint Part A with 844 Colorants.
- Extra white tints at 100% tint strength
- Ultradeep base tints at 150% tint strength

Five minutes minimum mixing on a mechanical shaker is required for complete mixing of color.

APPLICATION CONDITIONS

Temperature:	40°F minimum, 120°F maximum (air, surface, and material) At least 5°F above dew point
Relative humidity:	85% maximum

Refer to product Application Bulletin for detailed application information.

ORDERING INFORMATION

Packaging:	1 gallon mix:	5 gallon mix:
Part A:	.86 gal	4.29 gal
Part B:	.14 gal	0.71 gal
(premeasured components)		
Weight per gallon:	11.2 ± 0.2 lb mixed, may vary with color	

SAFETY PRECAUTIONS

Refer to the MSDS sheet before use.

Published technical data and instructions are subject to change without notice. Contact your Sherwin-Williams representative for additional technical data and instructions.

DISCLAIMER

The information and recommendations set forth in this Product Data Sheet are based upon tests conducted by or on behalf of The Sherwin-Williams Company. Such information and recommendations set forth herein are subject to change and pertain to the product offered at the time of publication. Consult your Sherwin-Williams representative to obtain the most recent Product Data Information and Application Bulletin.

WARRANTY

The Sherwin-Williams Company warrants our products to be free of manufacturing defects in accord with applicable Sherwin-Williams quality control procedures. Liability for products proven defective, if any, is limited to replacement of the defective product or the refund of the purchase price paid for the defective product as determined by Sherwin-Williams. NO OTHER WARRANTY OR GUARANTEE OF ANY KIND IS MADE BY SHERWIN-WILLIAMS, EXPRESSED OR IMPLIED, STATUTORY, BY OPERATION OF LAW OR OTHERWISE, INCLUDING MERCHANTABILITY AND FITNESS FOR A PARTICULAR PURPOSE.

MATERIAL SAFETY DATA SHEET

B65W611
12 00

DATE OF PREPARATION
Jun 6, 2009

SECTION 1 — PRODUCT AND COMPANY IDENTIFICATION

PRODUCT NUMBER
B65W611
PRODUCT NAME
ACROLON® 218 HS Polyurethane - Gloss (Part A), Extra White/Tint Base
MANUFACTURER'S NAME
THE SHERWIN-WILLIAMS COMPANY
101 Prospect Avenue N.W.
Cleveland, OH 44115

Telephone Numbers and Websites

Product Information	www.sherwin-williams.com
Regulatory Information	(216) 566-2902 www.paintdocs.com
Medical Emergency	(216) 566-2917
Transportation Emergency*	(800) 424-9300

**for Chemical Emergency ONLY (spill, leak, fire, exposure, or accident)*

SECTION 2 — COMPOSITION/INFORMATION ON INGREDIENTS

% by Weight	CAS Number	Ingredient	Units	Vapor Pressure
0.6	100-41-4	**Ethylbenzene**		
		ACGIH TLV	100 PPM	7.1 mm
		ACGIH TLV	125 PPM STEL	
		OSHA PEL	100 PPM	
		OSHA PEL	125 PPM STEL	
3	1330-20-7	**Xylene**		
		ACGIH TLV	100 PPM	5.9 mm
		ACGIH TLV	150 PPM STEL	
		OSHA PEL	100 PPM	
		OSHA PEL	150 PPM STEL	
2	64742-94-5	**Medium Aromatic Hydrocarbons**		
		ACGIH TLV	Not Available	0.12 mm
		OSHA PEL	Not Available	
0.2	91-20-3	**Naphthalene**		
		ACGIH TLV	10 PPM	1 mm
		ACGIH TLV	15 PPM STEL	
		OSHA PEL	10 PPM	
		OSHA PEL	15 PPM STEL	
5	78-93-3	**Methyl Ethyl Ketone**		
		ACGIH TLV	200 PPM	70 mm
		ACGIH TLV	300 PPM STEL	
		OSHA PEL	200 PPM	
		OSHA PEL	300 PPM STEL	
8	123-86-4	**n-Butyl Acetate**		
		ACGIH TLV	150 PPM	10 mm
		ACGIH TLV	200 PPM STEL	
		OSHA PEL	150 PPM	
		OSHA PEL	200 PPM STEL	
5	108-65-6	**1-Methoxy-2-Propanol Acetate**		
		ACGIH TLV	Not Available	1.8 mm
		OSHA PEL	Not Available	
15	14808-60-7	**Quartz**		
		ACGIH TLV	0.025 mg/m3 as Resp. Dust	
		OSHA PEL	0.1 mg/m3 as Resp. Dust	
21	13463-67-7	**Titanium Dioxide**		
		ACGIH TLV	10 mg/m3 as Dust	
		OSHA PEL	10 mg/m3 Total Dust	
		OSHA PEL	5 mg/m3 Respirable Fraction	

SECTION 3 — HAZARDS IDENTIFICATION

HMIS Codes

Health	2*
Flammability	3
Reactivity	0

ROUTES OF EXPOSURE

INHALATION of vapor or spray mist.
EYE or SKIN contact with the product, vapor or spray mist.

EFFECTS OF OVEREXPOSURE

EYES: Irritation.
SKIN: Prolonged or repeated exposure may cause irritation.
INHALATION: Irritation of the upper respiratory system.

May cause nervous system depression. Extreme overexposure may result in unconsciousness and possibly death.
Prolonged overexposure to solvent ingredients in Section 2 may cause adverse effects to the liver, urinary, blood forming and reproductive systems.

SIGNS AND SYMPTOMS OF OVEREXPOSURE

Headache, dizziness, nausea, and loss of coordination are indications of excessive exposure to vapors or spray mists.
Redness and itching or burning sensation may indicate eye or excessive skin exposure.

MEDICAL CONDITIONS AGGRAVATED BY EXPOSURE

May cause allergic respiratory and/or skin reaction in susceptible persons or sensitization. This effect may be delayed several hours after exposure.
Persons sensitive to isocyanates will experience increased allergic reaction on repeated exposure.

CANCER INFORMATION

For complete discussion of toxicology data refer to Section 11.

SECTION 4 — FIRST AID MEASURES

EYES: Flush eyes with large amounts of water for 15 minutes. Get medical attention.
SKIN: Wash affected area thoroughly with soap and water.
Remove contaminated clothing and launder before re-use.
INHALATION: If any breathing problems occur during use, **LEAVE THE AREA** and get fresh air. If problems remain or occur later, **IMMEDIATELY** get medical attention.
INGESTION: Do not induce vomiting. Get medical attention immediately.

SECTION 5 — FIRE FIGHTING MEASURES

FLASH POINT	LEL	UEL	FLAMMABILITY CLASSIFICATION
55 °F PMCC	0.8	13.1	RED LABEL -- Flammable, Flash below 100 °F (38 °C)

EXTINGUISHING MEDIA

Carbon Dioxide, Dry Chemical, Foam

UNUSUAL FIRE AND EXPLOSION HAZARDS

Closed containers may explode when exposed to extreme heat.
Application to hot surfaces requires special precautions.
During emergency conditions overexposure to decomposition products may cause a health hazard. Symptoms may not be immediately apparent. Obtain medical attention.

SPECIAL FIRE FIGHTING PROCEDURES

Full protective equipment including self-contained breathing apparatus should be used.
Water spray may be ineffective. If water is used, fog nozzles are preferable. Water may be used to cool closed containers to prevent pressure build-up and possible autoignition or explosion when exposed to extreme heat.

SECTION 6 — ACCIDENTAL RELEASE MEASURES

STEPS TO BE TAKEN IN CASE MATERIAL IS RELEASED OR SPILLED

- Remove all sources of ignition. Ventilate the area.
- Remove with inert absorbent.

SECTION 7 — HANDLING AND STORAGE

STORAGE CATEGORY

DOL Storage Class IB

PRECAUTIONS TO BE TAKEN IN HANDLING AND STORAGE

Contents are FLAMMABLE. Keep away from heat, sparks, and open flame.
During use and until all vapors are gone: Keep area ventilated - Do not smoke - Extinguish all flames, pilot lights, and heaters - Turn off stoves, electric tools and appliances, and any other sources of ignition.
Consult NFPA Code. Use approved Bonding and Grounding procedures.
Keep container closed when not in use. Transfer only to approved containers with complete and appropriate labeling. Do not take internally. Keep out of the reach of children.

SECTION 8 — EXPOSURE CONTROLS/PERSONAL PROTECTION

PRECAUTIONS TO BE TAKEN IN USE

NO PERSON SHOULD USE THIS PRODUCT, OR BE IN THE AREA WHERE IT IS BEING USED, IF THEY HAVE CHRONIC (LONG-TERM) LUNG OR BREATHING PROBLEMS OR IF THEY EVER HAD A REACTION TO ISOCYANATES.

Use only with adequate ventilation.

Avoid contact with skin and eyes. Avoid breathing vapor and spray mist.

Wash hands after using.

This coating may contain materials classified as nuisance particulates (listed "as Dust" in Section 2) which may be present at hazardous levels only during sanding or abrading of the dried film. If no specific dusts are listed in Section 2, the applicable limits for nuisance dusts are ACGIH TLV 10 mg/m3 (total dust), 3 mg/m3 (respirable fraction), OSHA PEL 15 mg/m3 (total dust), 5 mg/m3 (respirable fraction).

VENTILATION

Local exhaust preferable. General exhaust acceptable if the exposure to materials in Section 2 is maintained below applicable exposure limits. Refer to OSHA Standards 1910.94, 1910.107, 1910.108.

RESPIRATORY PROTECTION

Where overspray is present, a positive pressure air supplied respirator (TC19C NIOSH/MSHA approved) should be worn. If unavailable, a properly fitted organic vapor/particulate respirator approved by NIOSH/MSHA for protection against materials in Section 2 may be effective. Follow respirator manufacturers directions for use. Wear the respirator for the whole time of spraying and until all vapors and mists are gone. **NO PERSONS SHOULD BE ALLOWED IN THE AREA WHERE THIS PRODUCT IS BEING USED UNLESS EQUIPPED WITH THE SAME RESPIRATOR PROTECTION RECOMMENDED FOR THE PAINTERS.**

When sanding or abrading the dried film, wear a dust/mist respirator approved by NIOSH/MSHA for dust which may be generated from this product, underlying paint, or the abrasive.

PROTECTIVE GLOVES

To prevent skin contact, wear gloves which are recommended by glove supplier for protection against materials in Section 2.

EYE PROTECTION

Wear safety spectacles with unperforated sideshields.

OTHER PROTECTIVE EQUIPMENT

Use barrier cream on exposed skin.

OTHER PRECAUTIONS

This product must be mixed with other components before use. Before opening the packages, READ AND FOLLOW WARNING LABELS ON ALL COMPONENTS.

Intentional misuse by deliberately concentrating and inhaling the contents can be harmful or fatal.

SECTION 9 — PHYSICAL AND CHEMICAL PROPERTIES

PRODUCT WEIGHT	11.34 lb/gal	1358 g/l
SPECIFIC GRAVITY	1.36	
BOILING POINT	174 - 415 °F	78 - 212 °C
MELTING POINT	Not Available	
VOLATILE VOLUME	40%	
EVAPORATION RATE	Slower than ether	
VAPOR DENSITY	Heavier than air	
SOLUBILITY IN WATER	N.A.	

VOLATILE ORGANIC COMPOUNDS (VOC Theoretical - As Packaged)

2.90lb/gal	348g/l	Less Water and Federally Exempt Solvents
2.90lb/gal	348g/l	Emitted VOC

SECTION 10 — STABILITY AND REACTIVITY

STABILITY — Stable

CONDITIONS TO AVOID

None known.

INCOMPATIBILITY

None known.

HAZARDOUS DECOMPOSITION PRODUCTS

By fire: Carbon Dioxide, Carbon Monoxide

HAZARDOUS POLYMERIZATION

Will not occur

SECTION 11 — TOXICOLOGICAL INFORMATION

CHRONIC HEALTH HAZARDS

Methyl Ethyl Ketone may increase the nervous system effects of other solvents.

Reports have associated repeated and prolonged overexposure to solvents with permanent brain and nervous system damage.

Ethylbenzene is classified by IARC as possibly carcinogenic to humans (2B) based on inadequate evidence in humans and sufficient evidence in laboratory animals. Lifetime inhalation exposure of rats and mice to high ethylbenzene concentrations resulted in increases in certain types of cancer, including kidney tumors in rats and lung and liver tumors in mice. These effects were not observed in animals exposed to lower concentrations. There is no evidence that ethylbenzene causes cancer in humans.

Crystalline Silica (Quartz, Cristobalite) is listed by IARC and NTP. Long term exposure to high levels of silica dust, which can occur only when sanding or abrading the dry film, may cause lung damage (silicosis) and possibly cancer.

IARC's Monograph No. 93 reports there is sufficient evidence of carcinogenicity in experimental rats exposed to titanium dioxide but inadequate evidence for carcinogenicity in humans and has assigned a Group 2B rating. In addition, the IARC summary concludes, "No significant exposure to titanium dioxide is thought to occur during the use of products in which titanium is bound to other materials, such as paint."

TOXICOLOGY DATA

CAS No.	Ingredient Name			
100-41-4	Ethylbenzene			
		LC50 RAT	4HR	Not Available
		LD50 RAT		3500 mg/kg
1330-20-7	Xylene			
		LC50 RAT	4HR	5000 ppm
		LD50 RAT		4300 mg/kg
64742-94-5	Medium Aromatic Hydrocarbons			
		LC50 RAT	4HR	Not Available
		LD50 RAT		Not Available
91-20-3	Naphthalene			
		LC50 RAT	4HR	Not Available
		LD50 RAT		Not Available
78-93-3	Methyl Ethyl Ketone			
		LC50 RAT	4HR	Not Available
		LD50 RAT		2740 mg/kg
123-86-4	n-Butyl Acetate			
		LC50 RAT	4HR	2000 ppm
		LD50 RAT		13100 mg/kg
108-65-6	1-Methoxy-2-Propanol Acetate			
		LC50 RAT	4HR	Not Available
		LD50 RAT		8500 mg/kg
14808-60-7	Quartz			
		LC50 RAT	4HR	Not Available
		LD50 RAT		Not Available
13463-67-7	Titanium Dioxide			
		LC50 RAT	4HR	Not Available
		LD50 RAT		Not Available

SECTION 12 — ECOLOGICAL INFORMATION

ECOTOXICOLOGICAL INFORMATION

No data available.

SECTION 13 — DISPOSAL CONSIDERATIONS

WASTE DISPOSAL METHOD

Waste from this product may be hazardous as defined under the Resource Conservation and Recovery Act (RCRA) 40 CFR 261.
Waste must be tested for ignitability to determine the applicable EPA hazardous waste numbers.
Incinerate in approved facility. Do not incinerate closed container. Dispose of in accordance with Federal, State/Provincial, and Local regulations regarding pollution.

SECTION 14 — TRANSPORT INFORMATION

US Ground (DOT)

1 Gallon and Less may be Classed as CONSUMER COMMODITY, ORM-D
Larger Containers are Regulated as:
UN1263, PAINT, 3, PG II, (ERG#128)

DOT (Dept of Transportation) Hazardous Substances & Reportable Quantities

Naphthalene 100 lb RQ
Xylenes (isomers and mixture) 100 lb RQ

Bulk Containers may be Shipped as (check reportable quantities):

RQ, UN1263, PAINT, 3, PG II, (XYLENES (ISOMERS AND MIXTURE)), (ERG#128)

Canada (TDG)

UN1263, PAINT, CLASS 3, PG II, (ERG#128)

IMO

UN1263, PAINT, CLASS 3, PG II, (13 C c.c.), EmS F-E, S-E

SECTION 15 — REGULATORY INFORMATION

SARA 313 *(40 CFR 372.65C)* SUPPLIER NOTIFICATION

CAS No.	CHEMICAL/COMPOUND	% by WT	% Element
100-41-4	Ethylbenzene	0.5	
1330-20-7	Xylene	3	
91-20-3	Naphthalene	0.2	

CALIFORNIA PROPOSITION 65

WARNING: This product contains chemicals known to the State of California to cause cancer and birth defects or other reproductive harm.

TSCA CERTIFICATION

All chemicals in this product are listed, or are exempt from listing, on the TSCA Inventory.

SECTION 16 — OTHER INFORMATION

This product has been classified in accordance with the hazard criteria of the Canadian Controlled Products Regulations (CPR) and the MSDS contains all of the information required by the CPR.

The above information pertains to this product as currently formulated, and is based on the information available at this time. Addition of reducers or other additives to this product may substantially alter the composition and hazards of the product. Since conditions of use are outside our control, we make no warranties, express or implied, and assume no liability in connection with any use of this information.

MATERIAL SAFETY DATA SHEET

B65V600
05 00

DATE OF PREPARATION
May 19, 2009

SECTION 1 — PRODUCT AND COMPANY IDENTIFICATION

PRODUCT NUMBER
B65V600
PRODUCT NAME
ACROLON 218 HS Acrylic Polyurethane (Part B), Hardener
MANUFACTURER'S NAME
THE SHERWIN-WILLIAMS COMPANY
101 Prospect Avenue N.W.
Cleveland, OH 44115

Telephone Numbers and Websites

Product Information	www.sherwin-williams.com
Regulatory Information	(216) 566-2902 www.paintdocs.com
Medical Emergency	(216) 566-2917
Transportation Emergency*	(800) 424-9300
**for Chemical Emergency ONLY (spill, leak, fire, exposure, or accident)*	

SECTION 2 — COMPOSITION/INFORMATION ON INGREDIENTS

% by Weight	CAS Number	Ingredient	Units	Vapor Pressure
0.7	822-06-0	**Hexamethylene Diisocyanate (max.)**		
		ACGIH TLV	0.005 PPM	0.05 mm
		OSHA PEL	Not Available	
100	28182-81-2	**Hexamethylene Diisocyanate Polymer**		
		ACGIH TLV	Not Available	
		OSHA PEL	Not Available	

SECTION 3 — HAZARDS IDENTIFICATION

HMIS Codes

Health	2*
Flammability	1
Reactivity	1

ROUTES OF EXPOSURE
EYE or SKIN contact with product.
EFFECTS OF OVEREXPOSURE
EYES: Irritation.
SKIN: Prolonged or repeated exposure may cause irritation.
INHALATION: Irritation of the upper respiratory system.

SIGNS AND SYMPTOMS OF OVEREXPOSURE
Redness and itching or burning sensation may indicate eye or excessive skin exposure.
MEDICAL CONDITIONS AGGRAVATED BY EXPOSURE
May cause allergic respiratory and/or skin reaction in susceptible persons or sensitization. This effect may be delayed several hours after exposure.
Persons sensitive to isocyanates will experience increased allergic reaction on repeated exposure.
CANCER INFORMATION
For complete discussion of toxicology data refer to Section 11.

SECTION 4 — FIRST AID MEASURES

EYES: Flush eyes with large amounts of water for 15 minutes. Get medical attention.
SKIN: Wash affected area thoroughly with soap and water.
INHALATION: If any breathing problems occur during use, **LEAVE THE AREA** and get fresh air. If problems remain or occur later, **IMMEDIATELY** get medical attention.
INGESTION: Do not induce vomiting. Get medical attention immediately.

SECTION 5 — FIRE FIGHTING MEASURES

FLASH POINT	LEL	UEL	FLAMMABILITY CLASSIFICATION
> 200 °F PMCC	N.A.	N.A.	Not Applicable

EXTINGUISHING MEDIA

Carbon Dioxide, Dry Chemical, Foam

UNUSUAL FIRE AND EXPLOSION HAZARDS

Closed containers may explode (due to the build-up of pressure) when exposed to extreme heat.
During emergency conditions overexposure to decomposition products may cause a health hazard. Symptoms may not be immediately apparent. Obtain medical attention.

SPECIAL FIRE FIGHTING PROCEDURES

Full protective equipment including self-contained breathing apparatus should be used.
Water spray may be ineffective. If water is used, fog nozzles are preferable. Water may be used to cool closed containers to prevent pressure build-up and possible autoignition or explosion when exposed to extreme heat.

SECTION 6 — ACCIDENTAL RELEASE MEASURES

STEPS TO BE TAKEN IN CASE MATERIAL IS RELEASED OR SPILLED

- All personnel in the area should be protected as in Section 8.
- Cover spill with absorbent material. Deactivate spilled material with a 10% ammonium hydroxide solution (household ammonia). After 10 minutes, collect in open containers and add more ammonia. Cover loosely. Wash spill area with soap and water.

SECTION 7 — HANDLING AND STORAGE

STORAGE CATEGORY

DOL Storage Class IIIB

PRECAUTIONS TO BE TAKEN IN HANDLING AND STORAGE

Keep container closed when not in use. Transfer only to approved containers with complete and appropriate labeling. Do not take internally. Keep out of the reach of children.

SECTION 8 — EXPOSURE CONTROLS/PERSONAL PROTECTION

PRECAUTIONS TO BE TAKEN IN USE

NO PERSON SHOULD USE THIS PRODUCT, OR BE IN THE AREA WHERE IT IS BEING USED, IF THEY HAVE CHRONIC (LONG-TERM) LUNG OR BREATHING PROBLEMS OR IF THEY EVER HAD A REACTION TO ISOCYANATES.

Use only with adequate ventilation.
Avoid contact with skin and eyes. Avoid breathing vapor and spray mist.
Wash hands after using.
This coating may contain materials classified as nuisance particulates (listed "as Dust" in Section 2) which may be present at hazardous levels only during sanding or abrading of the dried film. If no specific dusts are listed in Section 2, the applicable limits for nuisance dusts are ACGIH TLV 10 mg/m3 (total dust), 3 mg/m3 (respirable fraction), OSHA PEL 15 mg/m3 (total dust), 5 mg/m3 (respirable fraction).

VENTILATION

Local exhaust preferable. General exhaust acceptable if the exposure to materials in Section 2 is maintained below applicable exposure limits. Refer to OSHA Standards 1910.94, 1910.107, 1910.108.

RESPIRATORY PROTECTION

Where overspray is present, a positive pressure air supplied respirator (TC19C NIOSH/MSHA approved) should be worn. If unavailable, a properly fitted organic vapor/particulate respirator approved by NIOSH/MSHA for protection against materials in Section 2 may be effective. Follow respirator manufacturers directions for use. Wear the respirator for the whole time of spraying and until all vapors and mists are gone. **NO PERSONS SHOULD BE ALLOWED IN THE AREA WHERE THIS PRODUCT IS BEING USED UNLESS EQUIPPED WITH THE SAME RESPIRATOR PROTECTION RECOMMENDED FOR THE PAINTERS.**
When sanding or abrading the dried film, wear a dust/mist respirator approved by NIOSH/MSHA for dust which may be generated from this product, underlying paint, or the abrasive.

PROTECTIVE GLOVES

To prevent skin contact, wear gloves which are recommended by glove supplier for protection against materials in Section 2.

EYE PROTECTION

Wear safety spectacles with unperforated sideshields.

OTHER PROTECTIVE EQUIPMENT

Use barrier cream on exposed skin.

OTHER PRECAUTIONS

This product must be mixed with other components before use. Before opening the packages, READ AND FOLLOW WARNING LABELS ON ALL COMPONENTS.

SECTION 9 — PHYSICAL AND CHEMICAL PROPERTIES

PRODUCT WEIGHT	9.41 lb/gal	1127 g/l
SPECIFIC GRAVITY	1.13	
BOILING POINT	Not Applicable	
MELTING POINT	Not Available	
VOLATILE VOLUME	0%	
EVAPORATION RATE	N.A.	
VAPOR DENSITY	N.A.	
SOLUBILITY IN WATER	N.A.	

VOLATILE ORGANIC COMPOUNDS (VOC Theoretical - As Packaged)

0.00lb/gal	0g/l	Less Water and Federally Exempt Solvents
0.00lb/gal	0g/l	Emitted VOC

SECTION 10 — STABILITY AND REACTIVITY

STABILITY — Stable

CONDITIONS TO AVOID

None known.

INCOMPATIBILITY

Contamination with Water, Alcohols, Amines and other compounds which react with isocyanates, may result in dangerous pressure in, and possible bursting of, closed containers.

HAZARDOUS DECOMPOSITION PRODUCTS

By fire: Carbon Dioxide, Carbon Monoxide

HAZARDOUS POLYMERIZATION

Will not occur

SECTION 11 — TOXICOLOGICAL INFORMATION

CHRONIC HEALTH HAZARDS

No ingredient in this product is an IARC, NTP or OSHA listed carcinogen.

TOXICOLOGY DATA

CAS No.	Ingredient Name			
822-06-0	**Hexamethylene Diisocyanate (max.)**			
		LC50 RAT	4HR	Not Available
		LD50 RAT		738 mg/kg
28182-81-2	**Hexamethylene Diisocyanate Polymer**			
		LC50 RAT	4HR	Not Available
		LD50 RAT		Not Available

SECTION 12 — ECOLOGICAL INFORMATION

ECOTOXICOLOGICAL INFORMATION

No data available.

SECTION 13 — DISPOSAL CONSIDERATIONS

WASTE DISPOSAL METHOD

Waste from this product is not hazardous as defined under the Resource Conservation and Recovery Act (RCRA) 40 CFR 261.

Incinerate in approved facility. Do not incinerate closed container. Dispose of in accordance with Federal, State/Provincial, and Local regulations regarding pollution.

SECTION 14 — TRANSPORT INFORMATION

US Ground (DOT)

Not Regulated for Transportation.

Canada (TDG)

Not Regulated for Transportation.

IMO

Not Regulated for Transportation.

SECTION 15 — REGULATORY INFORMATION

SARA 313 *(40 CFR 372.65C)* SUPPLIER NOTIFICATION

CAS No.	CHEMICAL/COMPOUND	% by WT	% Element

No ingredients in this product are subject to SARA 313 (40 CFR 372.65C) Supplier Notification.

TSCA CERTIFICATION

All chemicals in this product are listed, or are exempt from listing, on the TSCA Inventory.

SECTION 16 — OTHER INFORMATION

This product has been classified in accordance with the hazard criteria of the Canadian Controlled Products Regulations (CPR) and the MSDS contains all of the information required by the CPR.

The above information pertains to this product as currently formulated, and is based on the information available at this time. Addition of reducers or other additives to this product may substantially alter the composition and hazards of the product. Since conditions of use are outside our control, we make no warranties, express or implied, and assume no liability in connection with any use of this information.

09910-006
200.200 W.O. #12

SHERWIN WILLIAMS

Industrial and Marine Coatings

EPOXY MASTIC D.O.T.

PART A B58W200 SERIES
PART B B58V200 HARDENER

PRODUCT INFORMATION

PRODUCT DESCRIPTION

EPOXY MASTIC D.O.T. is a VOC-compliant 2-package epoxy-polyamide coating for use in industrial maintenance environments. Formulated to provide protection over marginally prepared surfaces.

USES:
- Bridges
- Laboratories
- Offshore structures
- Paper mills
- Power plants
- Refineries
- Storage tanks
- Structural and support steel

PERFORMANCE INFORMATION:
- Outstanding adhesion over marginally prepared surfaces.
- Chemical/moisture/ultraviolet light barrier
- As a barrier or universal primer when applying high performance coatings over alkyds, etc. to prevent lifting

PHYSICAL RESISTANCE:
- Direct Impact Resistance (ASTM G14)..... 100 in-lbs.
- Dry Heat Resistance (ASTM D2485, discolors) ..... 200°F
- Elcometer Adhesion (ASTM D4541)... 1036 psi
- Exterior Durability ..... Excellent (Chalk face will develop in 3-6 months, some discoloration)
- Flexibility (ASTM D1737)..... 1/16"
- Moisture Condensation Resistance . 1000 hours (ASTM D2247) (No blisters, rust, delamination or creepage)
- Pencil Hardness (ASTM D3363) 4H
- Salt Fog Resistance (ASTM B117) ..... Good (No cracking, softening or delamination of film. No more than 1/64" rust creepage and no more than 0.3% face rusting after 1000 hours exposure)
- Thermal Shock (ASTM D2246) . Pass 15 cycles

RESISTANCE GUIDE: (Resistance to fumes, splash and spillage - not immersion, ASTM D3912)
- Aliphatic Hydrocarbons ..... Severe
- Dilute Alkalies ..... Moderate
- Aromatic Hydrocarbon Solvents..... Not recommended
- Fresh Water ..... Severe
- Salt Water ..... Severe
- Dilute Inorganic Acids ..... Not recommended
- Oils ..... Severe
- Oxygenated Solvents ..... Not recommended

PRODUCT CHARACTERISTICS

Color/Finish: White and Ultradeep Base/Eg-Shel Gloss

Drying Schedule:
(4 mils WFT @ 77°F, 50% RH)

To touch:	8 hours
Tack free:	16 hours
To recoat:	18 hours min, 30 days max *
Full cure:	10 days
Max recoat time:	30 days (vinyls and chlorinated rubber - 72 hrs)

* NOTE: If maximum recoat time is exceeded, brush blast before recoating.

Flash Point: 130°F

# of Components: 2

Mixing Ratio: 1:1 by volume

Packaging:

Pot life: 4 hours @ 77°F

Recommended Spreading Rate:

Wet mils	6.6 - 7.8
Dry mils	5.0 - 6.0
Approx sq ft/gal	214-256

NOTE: Brush or roll application may require multiple coats to achieve maximum film thickness and uniformity of appearance.

Spreading Rate Coverage (calculated, no loss): 1284 sq ft/gal @ 1 mil DFT

Sweat In Time: 15 minutes

Volume Solids: 80 ± 2% (catalyzed)

Weight Solids: 90 ± 2% (catalyzed)

Weight/gal: 14.23 lbs. ± 15 (catalyzed)

VOC: (catalyzed)
Unreduced:
170 g/l, 1.42 lbs/gal
Reduced 15% with Xylene:
262 g/l, 2.18 lbs/gal

Shelf Life: 12 months minimum unopened @ 77°F

SURFACE PREPARATION

Surface must be clean, dry and in sound condition. Remove all oil, grease, dirt, loose rust, visible contaminants, peeling paint and other foreign material.

Iron and Steel: Minimum surface preparation for rusted steel is Hand Tool Cleaning per SSPC-SP2 or Power Tool Cleaning per SSPC-SP3. Remove grease, oil, dirt, soil, etc. from surface by Solvent Cleaning per SSPC-SP1.

Abrasive Blast Cleaning: If shot blasting is used, an appropriate amount of grit blast media should be incorporated into the mix to render a dense, angular 1.5-2.0 mil profile. Do not apply over shop prepared steel.

Aluminum: Remove oil, grease, dirt, oxide and other foreign material from the surface by cleaning per SSPC-SP1 or water blasting per NACE standard RP-01 71.

Galvanized Metal: Allow galvanized steel to weather a minimum of 6 months prior to painting. Remove grease, oil, dirt, soil, etc. from surface by Solvent Cleaning per SSPC-SP1. If weathering is not possible or if the metal has been treated with chromates or silicates, apply a test patch (minimum area of 2 sq. ft.) and allow the paint to dry for at least 1 week before testing adhesion. If adhesion is unacceptable, brush off blasting (SSPC-SP7 or NACE 4) is required.

Rusty galvanized steel requires a minimum surface preparation of Hand Tool Cleaning per SSPC-SP2 or Power Tool Cleaning per SSPC-SP3. NOT FOR USE ON ROOFS OR SHEET GALVANIZING.

Previously Painted Surfaces: Remove oil, grease, loose paint, mill scale, dirt, foreign matter, rust, mold, mildew, mortar, efflorescence and sealers. Glossy surfaces of old paint films must be clean and dull before repainting. Remove sanding dust. Surface preparation short of total removal of the old coatings may compromise the service life of the new system. Always check for compatibility of the previously painted surface with the new coating by applying a test patch of 2-3 sq. ft. Inspect the test patch for lifting or wrinkling of the old paint film. Allow the test patch to dry for a minimum of 7 days before checking adhesion. If wrinkling or lifting occurs or if adhesion is unacceptable, brush-off blast cleaning is required (SSPC-SP7 or NACE 4).

NOTE: Do not apply to any surface containing moisture. Do not apply to large expanses of sheet metal.

continued on back

FROM :SHERWIN-WILLIAMS CO. FAX NO. :7322870975 Jun. 11 2009 04:21PM P2

SHERWIN WILLIAMS

Industrial and Marine Coatings

EPOXY MASTIC D.O.T.

PART A B58W200 SERIES

PART B B58V200 HARDENER

PRODUCT INFORMATION

RECOMMENDED SYSTEMS

Steel (light/moderate service):
1 ct. Epoxy Mastic D.O.T. B58W Series/B58V200 @ 6 mils DFT
Total DFT: 6 mils

Steel (severe service):
2 cts. Epoxy Mastic D.O.T. B58W Series/B58V200 @ 6 mils DFT/ct
Total DFT: 12 mils

Steel (epoxy topcoat):
1 ct. Epoxy Mastic D.O.T. B58W Series/B58V200 @ 6 mils DFT
1 ct. Heavy Duty Epoxy* B67 Series/B60V3 @ 6 mils DFT
Total DFT: 12 mils
NOTE: Bild and Finish Epoxy also acceptable

Steel (epoxy topcoat):
1 ct. Epoxy Mastic D.O.T. B58W Series/B58V200 @ 6 mils DFT
1 ct. Tile Clad II Epoxy* B82 Series/B60V70 @ 4 mils DFT
Total DFT: 10 mils
NOTE: All Weather Epoxy also acceptable

Steel (acrylic latex topcoat):
1 ct. Epoxy Mastic D.O.T. B58W Series/B58V200 @ 6 mils DFT
1-2 cts. DTM Acrylic Coating B66 Series @ 1.5 mils DFT/ct
Total DFT: 9-12 mils

Steel (polyurethane topcoat):
1 ct. Epoxy Mastic D.O.T. B58W Series/B58V200 @ 6 mils DFT
1 ct. Hi-Bild Allphatic Polyurethane* B65 Series/B60V2 @ 3 mils DFT
Total DFT: 9 mils
NOTE: Hi-Solids Polyurethane also acceptable.

Aluminum/Galvanized Metal (moderate service):
1 ct. Epoxy Mastic D.O.T. B58W Series/B58V200 @ 6 mils DFT
Total DFT: 6 mils

Concrete Block (above 55°F):
1 ct. Epoxy Mastic D.O.T. B58W Series/B58V200 @ 6 mils DFT
1 ct. Heavy Duty Block Filler B42W46 @ 10 mils DFT or
1 ct. Kem Cati-Coat Epoxy Filler/Sealer B42WA8/B42WA9 @ 10 mils DFT
Total DFT: 16 mils

Masonry:
1 or 2 cts. Epoxy Mastic D.O.T. B58W Series/B58V200 @ 6 mils DFT
Total DFT: 6-12 mils

APPLICATION

In order to avoid blockage of spraying equipment, clean equipment before use and before periods of extended down time with Methyl Ethyl Ketone or Xylene, following safe handling procedures specified on its label.

For better performance in moderate and severely corrosive environments, 2 coats of Epoxy Mastic D.O.T. over a properly prepared surface is recommended.

Application of coating below minimum or above maximum spreading rate recommended may adversely affect coating performance.

Application Conditions:
Temperature: 55° minimum, 110°F maximum (air, surface, material)
At least 5°F above dew point
Relative Humidity: 85% maximum
NOTE: At 55°F and relative humidity greater than 50%, the gloss of the dried film may be lowered.

Application Methods:
Brush, roll, conventional and airless spray
Reducer: .....Below 80°F: R7K4 Xylene
..... Above 80°F: R7K58 Reducer #58
Clean Up: ..... Xylene
Conventional Spray:
- Fluid Pressure ..... 30 psi
- Atomization Pressure ..... 40 psi
- Gun ..... Binks 62SS
- Air Nozzle 66PB
- Reduction ..... as needed up to 10%

Airless Spray:
- Atomization Pressure ..... 2400 psi min
- Tip Size ..... 0.019"
- Hose ..... 3/8" ID
- Filter ..... 60 mesh
- Reduction ..... as needed up to 10%

Brush:
- 1/4" tgo 3/8" nap, synthetic or lambs wool roller cover
- Reduction ..... None required, 5% max

Roller:
- Reduction ..... as needed up to 5%

Mixing Instructions:
Use mechanical agitation to mix Part A and Part B separately, then add 1 part by volume of Part B to 1 part by volume of Part A. Mix the combined parts using mechanical agitation for at least 5 minutes. If mixed material is to be reduced, add reducer solvent after Parts A and B have been mixed together. Add the reducer while agitating the mixed paint. Allow catalyzed paint to "sweat in" for 15 minutes before application begins. Do not mix older catalyzed paint with freshly catalyzed paint.

PRECAUTIONS

Contents are combustible and FLAMMABLE. Vapors may cause flash fires. Keep away from heat, sparks and open flame. During use and until all vapors are gone, keep area ventilated; do not smoke, extinguish all flames, pilot lights and heaters; turn off stoves, electric tools, appliances and any other sources of ignition.

VAPOR HARMFUL. Use only with adequate ventilation. To avoid overexposure, open windows and doors or use other means to ensure fresh air entry during application and drying. If you experience eye watering, headaches or dizziness, increase fresh air or wear respiratory protection (TC23C or equivalent) or leave the area.

Do not permit contact with skin and eyes. Wash hands after using. Keep container closed when not in use. Do not transfer contents to other containers for storage.

FIRST AID: In case of eye contact, flush thoroughly with water. Get medical attention. For skin contact, wash thoroughly with soap and water. In case of respiratory difficulty, provide fresh air and call physician. If swallowed, get medical attention immediately. Concentrating and inhaling the contents can be harmful or fatal. This product must be mixed with other components before use. Before opening the packages, READ AND FOLLOW WARNING LABELS ON ALL COMPONENTS.

DO NOT TAKE INTERNALLY

KEEP OUT OF THE REACH OF CHILDREN

FOR PROFESSIONAL USE ONLY

SEE MATERIAL SAFETY DATA SHEET

NOTE: Do not topcoat Epoxy Mastic Coating with alkyd or epoxy ester enamels. Do not apply to large expanses of sheet metal. Do not apply to any surface containing moisture. Moisture condensation one Epoxy Mastic Coating which is not thoroughly dry will adversely affect its cure.

The information, rating and opinions stated here pertain to the material currently offered and represent the results of tests believed to be reliable. Published technical data and instructions are subject to change. Consult with your Sherwin-Williams representative for coating recommendations.

04/03

FROM :SHERWIN-WILLIAMS CO. FAX NO. :7322870975 Jun. 11 2009 04:21PM P3

MATERIAL SAFETY DATA SHEET

B58W201
08 00

DATE OF PREPARATION
Apr 28, 2009

SECTION 1 — PRODUCT AND COMPANY IDENTIFICATION

PRODUCT NUMBER
B58W201
PRODUCT NAME
Epoxy Mastic D.O.T (Part A), White
MANUFACTURER'S NAME
THE SHERWIN-WILLIAMS COMPANY
101 Prospect Avenue N.W.
Cleveland, OH 44115

Telephone Numbers and Websites

Product Information	www.sherwin-williams.com
Regulatory Information	(216) 566-2902 www.paintdocs.com
Medical Emergency	(216) 566-2917
Transportation Emergency*	(800) 424-9300
**for Chemical Emergency ONLY (spill, leak, fire, exposure, or accident)*	

SECTION 2 — COMPOSITION/INFORMATION ON INGREDIENTS

% by Weight	CAS Number	Ingredient	Units		Vapor Pressure
3	64742-95-6	**Light Aromatic Hydrocarbons**			
		ACGIH TLV	Not Available		3.8 mm
		OSHA PEL	Not Available		
1	108-67-8	**1,3,5-Trimethylbenzene**			
		ACGIH TLV	25	PPM	2 mm
		OSHA PEL	25	PPM	
5	95-63-6	**1,2,4-Trimethylbenzene**			
		ACGIH TLV	25	PPM	2.03 mm
		OSHA PEL	25	PPM	
5	25154-52-3	**Nonylphenol**			
		ACGIH TLV	Not Available		
		OSHA PEL	Not Available		
2	Proprietary	**Polyamine**			
		ACGIH TLV	Not Available		
		OSHA PEL	Not Available		
7	9046-10-0	**Poly(oxypropylene)diamine**			
		ACGIH TLV	Not Available		
		OSHA PEL	Not Available		
19	14808-60-7	**Quartz**			
		ACGIH TLV	0.025	mg/m3 as Resp. Dust	
		OSHA PEL	0.1	mg/m3 as Resp. Dust	
26	13463-67-7	**Titanium Dioxide**			
		ACGIH TLV	10	mg/m3 as Dust	
		OSHA PEL	10	mg/m3 Total Dust	
		OSHA PEL	5	mg/m3 Respirable Fraction	

SECTION 3 — HAZARDS IDENTIFICATION

ROUTES OF EXPOSURE
INHALATION of vapor or spray mist.
EYE or SKIN contact with the product, vapor or spray mist.
EFFECTS OF OVEREXPOSURE
EYES: Causes burns.
SKIN: Causes burns.
INHALATION: Irritation of the upper respiratory system.

May cause nervous system depression. Extreme overexposure may result in unconsciousness and possibly death.

HMIS Codes

Health	3*
Flammability	2
Reactivity	0

Prolonged overexposure to solvent ingredients in Section 2 may cause adverse effects to the liver, urinary and reproductive systems.

SIGNS AND SYMPTOMS OF OVEREXPOSURE

Headache, dizziness, nausea, and loss of coordination are indications of excessive exposure to vapors or spray mists.
Redness and itching or burning sensation may indicate eye or excessive skin exposure.

MEDICAL CONDITIONS AGGRAVATED BY EXPOSURE

May cause allergic skin reaction in susceptible persons or skin sensitization.

CANCER INFORMATION

For complete discussion of toxicology data refer to Section 11.

SECTION 4 — FIRST AID MEASURES

EYES: Flush eyes with large amounts of water for 15 minutes. Get medical attention **IMMEDIATELY**.
SKIN: Wash affected area thoroughly with soap and water.
If irritation persists or occurs later, get medical attention.
Remove contaminated clothing and launder before re-use.
INHALATION: If affected, remove from exposure. Restore breathing. Keep warm and quiet.
INGESTION: Do not induce vomiting. Get medical attention immediately.

SECTION 5 — FIRE FIGHTING MEASURES

FLASH POINT	LEL	UEL	FLAMMABILITY CLASSIFICATION
105 °F PMCC	0.7	7.0	Combustible, Flash above 99 and below 200 °F

EXTINGUISHING MEDIA

Carbon Dioxide, Dry Chemical, Foam

UNUSUAL FIRE AND EXPLOSION HAZARDS

Closed containers may explode when exposed to extreme heat.
Application to hot surfaces requires special precautions.
During emergency conditions overexposure to decomposition products may cause a health hazard. Symptoms may not be immediately apparent. Obtain medical attention.

SPECIAL FIRE FIGHTING PROCEDURES

Full protective equipment including self-contained breathing apparatus should be used.
Water spray may be ineffective. If water is used, fog nozzles are preferable. Water may be used to cool closed containers to prevent pressure build-up and possible autoignition or explosion when exposed to extreme heat.

SECTION 6 — ACCIDENTAL RELEASE MEASURES

STEPS TO BE TAKEN IN CASE MATERIAL IS RELEASED OR SPILLED

- Remove all sources of ignition. Ventilate the area.
- Remove with inert absorbent.

SECTION 7 — HANDLING AND STORAGE

STORAGE CATEGORY

DOL Storage Class II

PRECAUTIONS TO BE TAKEN IN HANDLING AND STORAGE

Contents are COMBUSTIBLE. Keep away from heat and open flame.
Consult NFPA Code. Use approved Bonding and Grounding procedures.
Keep container closed when not in use. Transfer only to approved containers with complete and appropriate labeling. Do not take internally.
Keep out of the reach of children.

SECTION 8 — EXPOSURE CONTROLS/PERSONAL PROTECTION

PRECAUTIONS TO BE TAKEN IN USE

Use only with adequate ventilation.
Do not get in eyes or on skin. Avoid breathing vapor and spray mist.
Wash hands after using.
This coating may contain materials classified as nuisance particulates (listed "as Dust" in Section 2) which may be present at hazardous levels only during sanding or abrading of the dried film. If no specific dusts are listed in Section 2, the applicable limits for nuisance dusts are ACGIH TLV 10 mg/m3 (total dust), 3 mg/m3 (respirable fraction), OSHA PEL 15 mg/m3 (total dust), 5 mg/m3 (respirable fraction).

VENTILATION

Local exhaust preferable. General exhaust acceptable if the exposure to materials in Section 2 is maintained below applicable exposure limits. Refer to OSHA Standards 1910.94, 1910.107, 1910.108.

RESPIRATORY PROTECTION

If personal exposure cannot be controlled below applicable limits by ventilation, wear a properly fitted organic vapor/particulate respirator approved by NIOSH/MSHA for protection against materials in Section 2.
When sanding or abrading the dried film, wear a dust/mist respirator approved by NIOSH/MSHA for dust which may be generated from this product, underlying paint, or the abrasive.

PROTECTIVE GLOVES
To prevent skin contact, wear gloves which are recommended by glove supplier for protection against materials in Section 2.
EYE PROTECTION
To prevent eye contact, wear safety spectacles with unperforated sideshields.
OTHER PROTECTIVE EQUIPMENT
Use barrier cream on exposed skin.
OTHER PRECAUTIONS
This product must be mixed with other components before use. Before opening the packages, READ AND FOLLOW WARNING LABELS ON ALL COMPONENTS.
Intentional misuse by deliberately concentrating and inhaling the contents can be harmful or fatal.

SECTION 9 — PHYSICAL AND CHEMICAL PROPERTIES

PRODUCT WEIGHT	15.49 lb/gal	1856 g/l
SPECIFIC GRAVITY	1.86	
BOILING POINT	308 - 360 °F	153 - 182 °C
MELTING POINT	Not Available	
VOLATILE VOLUME	25%	
EVAPORATION RATE	Slower than ether	
VAPOR DENSITY	Heavier than air	
SOLUBILITY IN WATER	N.A.	

VOLATILE ORGANIC COMPOUNDS (VOC Theoretical - As Packaged)

1.82lb/gal	218g/l	Less Water and Federally Exempt Solvents
1.82lb/gal	218g/l	Emitted VOC

SECTION 10 — STABILITY AND REACTIVITY

STABILITY — Stable
CONDITIONS TO AVOID
None known.
INCOMPATIBILITY
None known.
HAZARDOUS DECOMPOSITION PRODUCTS
By fire: Carbon Dioxide, Carbon Monoxide
HAZARDOUS POLYMERIZATION
Will not occur

SECTION 11 — TOXICOLOGICAL INFORMATION

CHRONIC HEALTH HAZARDS
Reports have associated repeated and prolonged overexposure to solvents with permanent brain and nervous system damage.
Crystalline Silica (Quartz, Cristobalite) is listed by IARC and NTP. Long term exposure to high levels of silica dust, which can occur only when sanding or abrading the dry film, may cause lung damage (silicosis) and possibly cancer.
IARC's Monograph No. 93 reports there is sufficient evidence of carcinogenicity in experimental rats exposed to titanium dioxide but inadequate evidence for carcinogenicity in humans and has assigned a Group 2B rating. In addition, the IARC summary concludes, "No significant exposure to titanium dioxide is thought to occur during the use of products in which titanium is bound to other materials, such as paint."

TOXICOLOGY DATA

CAS No.	Ingredient Name			
64742-95-6	Light Aromatic Hydrocarbons			
		LC50 RAT	4HR	Not Available
		LD50 RAT		Not Available
108-67-8	1,3,5-Trimethylbenzene			
		LC50 RAT	4HR	Not Available
		LD50 RAT		Not Available
95-63-6	1,2,4-Trimethylbenzene			
		LC50 RAT	4HR	Not Available
		LD50 RAT		Not Available
25154-52-3	Nonylphenol			
		LC50 RAT	4HR	Not Available
		LD50 RAT		Not Available
Proprietary	Polyamine			
		LC50 RAT	4HR	Not Available
		LD50 RAT		Not Available
9046-10-0	Poly(oxypropylene)diamine			
		LC50 RAT	4HR	Not Available
		LD50 RAT		Not Available
14808-60-7	Quartz			
		LC50 RAT	4HR	Not Available
		LD50 RAT		Not Available
13463-67-7	Titanium Dioxide			
		LC50 RAT	4HR	Not Available
		LD50 RAT		Not Available

SECTION 12 — ECOLOGICAL INFORMATION

ECOTOXICOLOGICAL INFORMATION

No data available.

SECTION 13 — DISPOSAL CONSIDERATIONS

WASTE DISPOSAL METHOD

Waste from this product may be hazardous as defined under the Resource Conservation and Recovery Act (RCRA) 40 CFR 261.
Waste must be tested for ignitability to determine the applicable EPA hazardous waste numbers.
Incinerate in approved facility. Do not incinerate closed container. Dispose of in accordance with Federal, State/Provincial, and Local regulations regarding pollution.

SECTION 14 — TRANSPORT INFORMATION

US Ground (DOT)

May be Classed as a Combustible Liquid for U.S. Ground.
UN1263, PAINT, 3, PG III, (ERG#128)

DOT (Dept of Transportation) Hazardous Substances & Reportable Quantities

Xylenes (isomers and mixture) 100 lb RQ

Bulk Containers may be Shipped as (check reportable quantities):

UN1263, PAINT, COMBUSTIBLE LIQUID, PG III, (ERG#128)

Canada (TDG)

May be Classed as a Combustible Liquid for Canadian Ground.
UN1263, PAINT, CLASS 3, PG III, (ERG#128)

IMO

UN1263, PAINT, CLASS 3, PG III, (41 C c.c.), EmS F-E, S-E

SECTION 15 — REGULATORY INFORMATION

SARA 313 *(40 CFR 372.65C)* SUPPLIER NOTIFICATION

CAS No.	CHEMICAL/COMPOUND	% by WT	% Element
95-63-6	1,2,4-Trimethylbenzene	5	

CALIFORNIA PROPOSITION 65

WARNING: This product contains chemicals known to the State of California to cause cancer and birth defects or other reproductive harm.

TSCA CERTIFICATION

All chemicals in this product are listed, or are exempt from listing, on the TSCA Inventory.

SECTION 16 — OTHER INFORMATION

This product has been classified in accordance with the hazard criteria of the Canadian Controlled Products Regulations (CPR) and the MSDS contains all of the information required by the CPR.

The above information pertains to this product as currently formulated, and is based on the information available at this time. Addition of reducers or other additives to this product may substantially alter the composition and hazards of the product. Since conditions of use are outside our control, we make no warranties, express or implied, and assume no liability in connection with any use of this information.

MATERIAL SAFETY DATA SHEET

B58V200
03 00

DATE OF PREPARATION
Apr 27, 2009

SECTION 1 — PRODUCT AND COMPANY IDENTIFICATION

PRODUCT NUMBER
B58V200
PRODUCT NAME
Epoxy Mastic D.O.T. (Part B), Hardener
MANUFACTURER'S NAME
THE SHERWIN-WILLIAMS COMPANY
101 Prospect Avenue N.W.
Cleveland, OH 44115

Telephone Numbers and Websites

Product Information	www.sherwin-williams.com
Regulatory Information	(216) 566-2902 www.paintdocs.com
Medical Emergency	(216) 566-2917
Transportation Emergency*	(800) 424-9300
**for Chemical Emergency ONLY (spill, leak, fire, exposure, or accident)*	

SECTION 2 — COMPOSITION/INFORMATION ON INGREDIENTS

% by Weight	CAS Number	Ingredient	Units	Vapor Pressure
1	100-41-4	**Ethylbenzene**		
		ACGIH TLV	100 PPM	7.1 mm
		ACGIH TLV	125 PPM STEL	
		OSHA PEL	100 PPM	
		OSHA PEL	125 PPM STEL	
6	1330-20-7	**Xylene**		
		ACGIH TLV	100 PPM	5.9 mm
		ACGIH TLV	150 PPM STEL	
		OSHA PEL	100 PPM	
		OSHA PEL	150 PPM STEL	
26	25068-38-6	**Epoxy Polymer**		
		ACGIH TLV	Not Available	
		OSHA PEL	Not Available	
49	14808-60-7	**Quartz**		
		ACGIH TLV	0.025 mg/m3 as Resp. Dust	
		OSHA PEL	0.1 mg/m3 as Resp. Dust	

SECTION 3 — HAZARDS IDENTIFICATION

HMIS Codes

Health	2*
Flammability	3
Reactivity	0

ROUTES OF EXPOSURE
INHALATION of vapor or spray mist.
EYE or SKIN contact with the product, vapor or spray mist.
EFFECTS OF OVEREXPOSURE
EYES: Irritation.
SKIN: Prolonged or repeated exposure may cause irritation.
INHALATION: Irritation of the upper respiratory system.

May cause nervous system depression. Extreme overexposure may result in unconsciousness and possibly death.
Prolonged overexposure to solvent ingredients in Section 2 may cause adverse effects to the liver, urinary and reproductive systems.
SIGNS AND SYMPTOMS OF OVEREXPOSURE
Headache, dizziness, nausea, and loss of coordination are indications of excessive exposure to vapors or spray mists.
Redness and itching or burning sensation may indicate eye or excessive skin exposure.
MEDICAL CONDITIONS AGGRAVATED BY EXPOSURE
May cause allergic skin reaction in susceptible persons or skin sensitization.
CANCER INFORMATION
For complete discussion of toxicology data refer to Section 11.

SECTION 4 — FIRST AID MEASURES

EYES: Flush eyes with large amounts of water for 15 minutes. Get medical attention.
SKIN: Wash affected area thoroughly with soap and water.
If irritation persists or occurs later, get medical attention.
Remove contaminated clothing and launder before re-use.
INHALATION: If affected, remove from exposure. Restore breathing. Keep warm and quiet.
INGESTION: Do not induce vomiting. Get medical attention immediately.

SECTION 5 — FIRE FIGHTING MEASURES

FLASH POINT	LEL	UEL	FLAMMABILITY CLASSIFICATION
80 °F PMCC	1.0	7.0	RED LABEL -- Flammable, Flash below 100 °F (38 °C)

EXTINGUISHING MEDIA
Carbon Dioxide, Dry Chemical, Foam
UNUSUAL FIRE AND EXPLOSION HAZARDS
Closed containers may explode when exposed to extreme heat.
Application to hot surfaces requires special precautions.
During emergency conditions overexposure to decomposition products may cause a health hazard. Symptoms may not be immediately apparent. Obtain medical attention.
SPECIAL FIRE FIGHTING PROCEDURES
Full protective equipment including self-contained breathing apparatus should be used.
Water spray may be ineffective. If water is used, fog nozzles are preferable. Water may be used to cool closed containers to prevent pressure build-up and possible autoignition or explosion when exposed to extreme heat.

SECTION 6 — ACCIDENTAL RELEASE MEASURES

STEPS TO BE TAKEN IN CASE MATERIAL IS RELEASED OR SPILLED
- Remove all sources of ignition. Ventilate the area.
- Remove with inert absorbent.

SECTION 7 — HANDLING AND STORAGE

STORAGE CATEGORY
DOL Storage Class IC
PRECAUTIONS TO BE TAKEN IN HANDLING AND STORAGE
Contents are FLAMMABLE. Keep away from heat, sparks, and open flame.
During use and until all vapors are gone: Keep area ventilated - Do not smoke - Extinguish all flames, pilot lights, and heaters - Turn off stoves, electric tools and appliances, and any other sources of ignition.
Consult NFPA Code. Use approved Bonding and Grounding procedures.
Keep container closed when not in use. Transfer only to approved containers with complete and appropriate labeling. Do not take internally. Keep out of the reach of children.

SECTION 8 — EXPOSURE CONTROLS/PERSONAL PROTECTION

PRECAUTIONS TO BE TAKEN IN USE
Use only with adequate ventilation.
Avoid contact with skin and eyes. Avoid breathing vapor and spray mist.
Wash hands after using.
This coating may contain materials classified as nuisance particulates (listed "as Dust" in Section 2) which may be present at hazardous levels only during sanding or abrading of the dried film. If no specific dusts are listed in Section 2, the applicable limits for nuisance dusts are ACGIH TLV 10 mg/m3 (total dust), 3 mg/m3 (respirable fraction), OSHA PEL 15 mg/m3 (total dust), 5 mg/m3 (respirable fraction).
VENTILATION
Local exhaust preferable. General exhaust acceptable if the exposure to materials in Section 2 is maintained below applicable exposure limits. Refer to OSHA Standards 1910.94, 1910.107, 1910.108.
RESPIRATORY PROTECTION
If personal exposure cannot be controlled below applicable limits by ventilation, wear a properly fitted organic vapor/particulate respirator approved by NIOSH/MSHA for protection against materials in Section 2.
When sanding or abrading the dried film, wear a dust/mist respirator approved by NIOSH/MSHA for dust which may be generated from this product, underlying paint, or the abrasive.
PROTECTIVE GLOVES
Wear gloves which are recommended by glove supplier for protection against materials in Section 2.
EYE PROTECTION
Wear safety spectacles with unperforated sideshields.
OTHER PROTECTIVE EQUIPMENT
Use of barrier cream on exposed skin is recommended.

OTHER PRECAUTIONS

This product must be mixed with other components before use. Before opening the packages, READ AND FOLLOW WARNING LABELS ON ALL COMPONENTS.

Intentional misuse by deliberately concentrating and inhaling the contents can be harmful or fatal.

SECTION 9 — PHYSICAL AND CHEMICAL PROPERTIES

PRODUCT WEIGHT	12.68 lb/gal	1519 g/l
SPECIFIC GRAVITY	1.53	
BOILING POINT	277 - 292 °F	136 - 144 °C
MELTING POINT	Not Available	
VOLATILE VOLUME	13%	
EVAPORATION RATE	Slower than ether	
VAPOR DENSITY	Heavier than air	
SOLUBILITY IN WATER	N.A.	

VOLATILE ORGANIC COMPOUNDS (VOC Theoretical - As Packaged)

0.98lb/gal	117g/l	Less Water and Federally Exempt Solvents
0.98lb/gal	117g/l	Emitted VOC

SECTION 10 — STABILITY AND REACTIVITY

STABILITY — Stable

CONDITIONS TO AVOID

None known.

INCOMPATIBILITY

None known.

HAZARDOUS DECOMPOSITION PRODUCTS

By fire: Carbon Dioxide, Carbon Monoxide

HAZARDOUS POLYMERIZATION

Will not occur

SECTION 11 — TOXICOLOGICAL INFORMATION

CHRONIC HEALTH HAZARDS

Reports have associated repeated and prolonged overexposure to solvents with permanent brain and nervous system damage.

Ethylbenzene is classified by IARC as possibly carcinogenic to humans (2B) based on inadequate evidence in humans and sufficient evidence in laboratory animals. Lifetime inhalation exposure of rats and mice to high ethylbenzene concentrations resulted in increases in certain types of cancer, including kidney tumors in rats and lung and liver tumors in mice. These effects were not observed in animals exposed to lower concentrations. There is no evidence that ethylbenzene causes cancer in humans.

Crystalline Silica (Quartz, Cristobalite) is listed by IARC and NTP. Long term exposure to high levels of silica dust, which can occur only when sanding or abrading the dry film, may cause lung damage (silicosis) and possibly cancer.

TOXICOLOGY DATA

CAS No.	Ingredient Name			
100-41-4	Ethylbenzene			
		LC50 RAT	4HR	Not Available
		LD50 RAT		3500 mg/kg
1330-20-7	Xylene			
		LC50 RAT	4HR	5000 ppm
		LD50 RAT		4300 mg/kg
25068-38-6	Epoxy Polymer			
		LC50 RAT	4HR	Not Available
		LD50 RAT		Not Available
14808-60-7	Quartz			
		LC50 RAT	4HR	Not Available
		LD50 RAT		Not Available

SECTION 12 — ECOLOGICAL INFORMATION

ECOTOXICOLOGICAL INFORMATION

No data available.

SECTION 13 — DISPOSAL CONSIDERATIONS

WASTE DISPOSAL METHOD

Waste from this product may be hazardous as defined under the Resource Conservation and Recovery Act (RCRA) 40 CFR 261.

Waste must be tested for ignitability to determine the applicable EPA hazardous waste numbers.

Incinerate in approved facility. Do not incinerate closed container. Dispose of in accordance with Federal, State/Provincial, and Local regulations regarding pollution.

SECTION 14 — TRANSPORT INFORMATION

US Ground (DOT)
1 Gallon and Less may be Classed as CONSUMER COMMODITY, ORM-D
Larger Containers are Regulated as:
UN1263, PAINT, 3, PG III, (ERG#128)

DOT (Dept of Transportation) Hazardous Substances & Reportable Quantities
Xylenes (isomers and mixture) 100 lb RQ

Bulk Containers may be Shipped as (check reportable quantities):
RQ, UN1263, PAINT, 3, PG III, (XYLENES (ISOMERS AND MIXTURE)), (ERG#128)

Canada (TDG)
UN1263, PAINT, CLASS 3, PG III, LIMITED QUANTITY, (ERG#128)

IMO
UN1263, PAINT, CLASS 3, PG III, (27 C c.c.), EmS F-E, S-E

SECTION 15 — REGULATORY INFORMATION

SARA 313 *(40 CFR 372.65C)* SUPPLIER NOTIFICATION

CAS No.	CHEMICAL/COMPOUND	% by WT	% Element
100-41-4	Ethylbenzene	1	
1330-20-7	Xylene	6	

CALIFORNIA PROPOSITION 65
WARNING: This product contains chemicals known to the State of California to cause cancer and birth defects or other reproductive harm.

TSCA CERTIFICATION
All chemicals in this product are listed, or are exempt from listing, on the TSCA Inventory.

SECTION 16 — OTHER INFORMATION

This product has been classified in accordance with the hazard criteria of the Canadian Controlled Products Regulations (CPR) and the MSDS contains all of the information required by the CPR.

The above information pertains to this product as currently formulated, and is based on the information available at this time. Addition of reducers or other additives to this product may substantially alter the composition and hazards of the product. Since conditions of use are outside our control, we make no warranties, express or implied, and assume no liability in connection with any use of this information.

Materials Engineering Unit

241 Erie Street, Room 234
Jersey City, NJ 07310
Tel: 201-216-2952 Fax: 201-216-2949

THE PORT AUTHORITY OF NY & NJ

TRANSMITTAL
No. 00073

PROJECT: WO12 South Wing Emerg. Stair Repairs **DATE:** 11/25/2010

TO: VRH Construction Corp.
c/o Port Authority of NY & NJ
625 Eight Ave. 2nd Flr. North Bldg
New York, NY 10018

CONTRACT: PABT-200.200 WO12

ATTN: **Anthony Carnabuci**

		STATUS LEGEND:
☐ Shop Drawings	Approved (APP)	New Item (NEW)
☑ Letter	Approved as Corrected (AAC)	Not Approved (NA)
☐ Prints	Approved as Noted (AAN)	Not Reviewed (NR)
☐ Change Order	For Record Only (FRO)	Review With Comments (RWC)
☐ Plans	For Your Information (FYI)	Review With No Comments (RWNC)
☐ Samples	Incomplete (INC)	Superseded (SUPS)
☐ Specifications		
☑ Other: Made from Submittal	☐ Attached ☐ Separate Cover Via:	
	Review and Comment	

SUBMITTAL	REV.	DATE	DESCRIPTION	Remark	STATUS
05121-0001	R001	11/23/2010	Welding QC Plan Papp Iron Works	1	AAN

Remarks: 1. Submitted CWI certifications for Freddie Shivdat and Paul Pruess are current and acceptable.
2. Submitted Welding Procedures comply with AWS D1.1 requirements. The GMAW welding procedures do not provide metal transfer information. Please note that short circuiting mode will not be permitted for GMAW process.
3. This approval does not authorize the fabricator to conduct coating. For Surface preparation and coating, please submit coating information separately.

Approvals shall not relieve the Contractor of any responsibility as required by the Contract or waiver any further authority of the Engineer or modify or waive any provisions of the subject Contract with regard to this material(s) or its approval.

Material(s), which do not conform to the contract documents, will be subject to rejection at the job site by the Resident Engineer.

If you have any questions, please call A. Zumaran of my staff at (201) 216-2983. Our fax number is (201) 216-2949.

Signed:
/w Casimir Bognacki, P.E.
Chief of Materials Engineering

CC: P. Salvatore w/att., A. Kaprielian w/att.,
A. Zumaran, MF

Expedition ®

ARE	SEC	RE	ARE	OE	OE
	THE PORT AUTHORITY OF NY & NJ PABT ENGINEERING FIELD OFFICE				
FILE					

LETTER OF TRANSMITTAL

Action Key

1 For your records and/or use
2 For price quotation
3 For approval
4 Approved/Reviewed
5 Approved as noted: Re-submission not required
6 Approved as noted: Revise and re-submit
7 Rejected: Re-submit per contract documents

VRH CONSTRUCTION CORP.
General Contractors & Construction Managers

To	The Port Authority of NY & NJ	Transmittal No.	00094
	2 Gateway Ctr.	Job No.	2030WO12
	14th Floor	Project	PANY/NJ-bt-200.200 WO 12
	Newark, NJ 07102		South Wing Emergency Stair Repairs
Attention	Darlene Coitino		
Phone No.	973-792-4691 Fax		

We are sending you herewith the followir ☒ Drawings ☒ Shop Drawings ☐ Samples ☐ Specifications ☒ Other:

Via: ☒ Attached ☐ Separate Cover Via Mail

Quantity	Drawing/Submittal No.	Description	Action
9	05121-001 Rev.1	Dwg: Title: Welding Quality Plan Desc: Welding Quality Plan	3

RECEIVED
NOV 0 9 2010
RECEIVED
MATERIALS ENGINEERING
NOV 9 2010

Remarks:

cc: P. Salvatore; A. Kaprielian/PANYNJ

Signed Anthony Camabuci

By Anthony J. Camabuci

Date 11/5/2010

625 Eighth Avenue
2nd Flr, North Building
New York, NY 10018

Phone
212-629-6187
Fax
212-629-9243

VRH Construction Corp.

625 Eighth Avenue
2nd Flr, North Building
New York, NY 10018

Phone: 212-629-6187
Fax: 212-629-9243

SUBMITTAL NO. 05121-001
PACKAGE NO: 05121

TITLE: Welding Quality Plan
PROJECT: PANY/NJ-bt-200.200 WO 12

REQUIRED START: 8/20/2010
REQUIRED FINISH: 9/3/2010

DRAWING:
STATUS: 3
BIC: PANYNJ

DAYS HELD: 0
DAYS ELAPSED: 77
DAYS OVERDUE: 63

RECEIVED FROM		SENT TO		RETURNED BY		FORWARDED TO	
PAPP	AP	PANYNJ	DC	PANYNJ	DC	PAPP	AP

Revision No.	Description / Remarks	Received	Sent	Returned	Forwarded	Status	Sepias	Prints	Drawing Date	Held	Elapsed
000	Welding Quality Control	8/20/2010	8/20/2010			3	0	9		77	77
001	Welding Quality Plan			9/20/2010	9/20/2010	5	0	1		-46	0
002	Welding Quality Plan	11/5/2010	11/5/2010			3	0	9		0	0

Rev. 1

Papp Iron Works, Inc.

QUALITY CONTROL PLAN

WO#12-S. Wing Emergency Stair Repair

625 Eighth Ave. 2nd Floor

New York, NY 10018

05121-001

200.200 W.O. 12

950 South Second Street, PO Box 3149 Plainfield, NJ 07063 908-731-1000 Fax: 908-757-3567
Web Site: www.pappironworks.com

Package I

Winning Performance Since 1948

950 South Second Street, P.O. Box 3149, Plainfield, NJ. 07063
Tel: (908) 731-1000 Fax: (908) 757-3567
Web Site: www.pappironworks.com

Quality Control Plan

Amendment No: 1 February 1, 2003

This Quality Control Plan covers the processes and procedures established and implemented by our firm to ensure that the products supplied to our clients meet and exceed the highest standards within the miscellaneous structural steel industry and related sections of the AISC Code of Standard Practice for the Fabrication and Erection of Structural Steel Buildings and the AWS D1.1 Structural Welding Code.

This document is a confidential and propriety document and is intended for the use of our clients. It must not be duplicated and distributed without the written consent of an officer of Papp Iron Works, Inc. Each individual authorized copy is marked for identification and can be traced to this original.

An amendment is hereby made to the Papp Iron Works, Inc., QA/QC plan to conform with the testing, inspection and quality assurance requirements of the Port Authority of NY/NJ on all projects:

Management responsibilities:

Winning Performance since 1948

950 South Second Street, P.O. Box 3149, Plainfield, NJ. 07063
Tel: (908) 731-1000 Fax: (908) 757-3567
Web Site: www.pappironworks.com

Quality Control Plan

This Quality Control Plan covers the processes and procedures established and implemented by our firm to ensure that the products supplied to our clients meet and exceed the highest standards within the miscellaneous structural steel industry and related sections of the AISC Code of Standard Practice for the Fabrication and Erection of Structural Steel Buildings and the AWS D1.1 Structural Welding Code.

This document is a confidential and propriety document and is intended for the use of our clients. It must not be duplicated and distributed without the written consent of an officer of Papp Iron Works, Inc. Each individual authorized copy is marked for identification and can be traced to this original.

This section is amended to include the following statement(s):
Prior to the commencement of fabrication, there will be a meeting of the project manager, the president of Papp Iron Works (of designated deputy) and the QA/QC supervisor to discuss and address the specific QA/QC requirements of the project. Based on this firm's contractual obligations Papp will either engage a third party testing and inspection firm to conduct the required testing and inspection or request the owner or General Contractor to furnish such services.

Fabrication:
This section is amended to include the following statement(s):
The QA/QC supervisor will engage Analytical Quality & Monitoring Service, Inc. to conduct the required testing and inspection in accordance with the PA's requirements. Otherwise, the QA/QC manager will notify the owner, GC or designated representative when the fabrication is commencing so that adequate arrangements can be made by them to have the work inspected and tested.

Receiving Material Control:
This section is amended to include the following statement(s):
The QA/QC supervisor will hold copies of all mill test reports in a file and make them readily available to the third party inspection agency on request by such agency.

Surface Cleaning and Painting:
This section is amended to include the following statement(s):
The workers conducting the application of shop primer must review the surface cleaning requirements of the primer paint being used. The QA/QC supervisor shall verify that the required surface cleaning is done and that all conditions detrimental to the successful application and performance of the primer paint are absent such and inadequate surface and ambient temperature and excessive airborne particles.

Special Inspections:
This section is amended to include the following statement(s):
The QA/QC supervisor must verify that the following tests and inspection are conducted by the third party inspection agency hired by Papp or others:

100 % ultrasonic examinations of all groove welds.
100% visual of all joint fit-up and welds installed.
30% magnetic particle examination of all fillet welds.
Torque verification of all high strength bolts installed and tightened in the shop.
Inspection of primer paint for surface preparation and final dry film thickness.

Inspection of fieldwork:
This section is amended to include the following statement(s):
The field foreman must notify the project manager of field welding or bolting prior to the commencement of any such fieldwork.
The project manager shall notify AQM, Inc, the owner or GC of the pending commencement of welding work so that arrangements can be made for the responsible party to conduct the required inspections and testing or have them conducted.
The field foreman must have available for the use and review of the inspector, all welder certifications and procedure qualifications for the intended welding work prior to the commencement of any such work.
The field foreman must have the following equipment available for use by the third party inspection agency in the execution of his work:

Skidmore Wilhelm tension calibration gauge.
Calibrated torque wrench.
Safe access to the work being tested and inspected.

Table of Contents

Subject	Page No.
Quality Control Statement	2
Management Responsibilities	3
Drawings, RFIs and Approvals	4
Shop Fabrication	
Quality Control	4
Receiving Material Control	5
Raw Material Storage	5
Manufacture of Detail Parts	6
Joint Fit-Up	6
Burning and Flame Cutting	6
Punching and Drilling	7
Welding	8
Bolted Shop Connections	8
Tagging and Marking Completed pieces	9
Surface Cleaning, Painting & Coating	9
Storage of Fabricated Pieces	9
Final Shop Inspection: in-house or special	9
Shipment to the field	10
Receiving and Unloading in the field	11
Storage on site	11
Field Erection and Assembly	11
Field Welding	11
Field Bolting	12
Inspection of field work:	12
Field Corrections and Changes	12
Clean up and Demobilization	13
Conclusion	13

Quality Control Statement

The management and staff of Papp Iron Works, Inc. promise to strive to achieve the highest possible level of quality in our products and service. We are a full service miscellaneous structural steel fabricator and erector since 1948, who has achieved a very high ranking within our industry by constantly producing high quality products and service at very competitive prices and within the most demanding time frames.

We will continuously strive to build upon the level that we have achieved in an effort to further improve our reputation and stature within the industry and to assist our clients in achieving a competitive edge whenever they choose us for their projects.

This mission is a requirement for all of our staff to strive towards in our team effort to bring quality to our clients' projects through our own quality efforts. This document has been adopted as a standard by the management and staff of Papp Iron Works, Inc.

This document is not a safety awareness plan and does not address any safety issues related to the activities discussed herein. All personnel must be trained and aware of the safety requirements of their specific jobs and the hazards inherent as outlined in the company's safety plan and program.

Signed: _____ Date: 2-4-2010
Frank Stephan / Director of Operations
President

Signed: _____ Date: 2-4-2010
Quality Control Manager

Management Responsibilities

It is the president of Papp Iron Works, Inc. responsibility to ensure that the quality control system is implemented and being adhered to. The president may delegate certain responsibilities to responsible personnel who will be familiar with the quality control program and will carry out such duties as is assigned by the president.

Such responsible personnel may include the following:

- Project manager
- Shop superintendent
- Field or shop foremen

The responsible personnel who will serve as the Quality Control supervisors must meet the minimum qualifications as follows:

- An employee of Papp Iron Works, Inc. for at least 5 consecutive years
- Be competent to detect deficiencies with fabrication layout, fit-up, welding and general fabrication.
- Must be able to read blue prints and interpret details and specifications used in steel fabrication.
- Must be familiar with the AWS D1.1 Structural Welding Code and the AISC Code of Standard Practice for the fabrication and erection of structural steel buildings.
- Have attended technical seminars and/ or courses in welding and steel fabrication.

Quality Control functions can also be carried out by workmen, who have been involved in layout, fit-up, fabrication and welding and has demonstrated such competence in their daily work assignments to the satisfaction of the QA supervisor.

The responsible personnel should communicate any break down in the quality control systems by written memo or at scheduled quality control meetings or at special meetings as may be necessary. Quality Control meetings should be scheduled at least once every two weeks. Special meetings should be called whenever a project's quality control requirements exceed those of Papp Iron Works or whenever a question is raised about the quality of our work.

The president, project manager, superintendent or foremen must familiarize themselves and inform the workmen of any special quality control requirements of a client or project which exceeds those of Papp Iron Works, Inc.

The shop superintendent shall provide safe access for any third party inspectors or owners' representatives who may visit the site. At no time should a non-employee such as
a third party inspector or other owners' representative be allowed to enter the shop floor unescorted because of safety reasons.

Drawings, RFI and Approvals

All detailing of shop drawings must be double checked for conformance with original bid documents and governing codes. Any changes must be accompanied by written approval by the engineer of record of the project or other party as designated by our client. Changes must be indicated on a revised drawing indicating the date, details and locations of the change.

The drafting and detailing department supervisor must ensure that drawings are up dated and submitted for approval by our client's engineers and architects. Drawings must be kept in a clean and orderly manner in the file drawers so that they can be easily located and that the latest revised copies are in place of superseded drawings at all times.

All Request For Information (RFI) or clarifications must be made in written format and filed in the project files as per industry standards. The project manager must be copied on all project correspondence and it is his responsibility to follow up with clients, engineers and architects for approval of our submittals and requests in a timely manner.

Fabrication

Quality Control

It is the shop superintendent's responsibility to ensure that all drawings issued for fabrication are approved. Any changes made after fabrication has started must be accompanied by a change order and documented on the shop drawing as per industry and AISC standards.

The quality control procedures are to be reviewed and followed by all shop employees as the first line of quality control of the products fabricated by our company. It is the shop superintendent's responsibility to ensure that all employees are familiar with them and that they are followed.

Field superintendence will be the responsibility of the project manager designated to a specific project. The project manager shall make sufficient field visits to ensure that the field operations are proceeding smoothly. Daily field supervision will be the responsibility of the field foreman.

Receiving Material Control

All structural steel materials should be checked upon delivery for general physical condition (exhibit 'E'). Any visible damage should be brought to the superintendent's attention or his designated representative during his absence.

All materials, other than A36, should be accompanied by mill test reports (exhibit 'D') and should be marked to clearly identify them from other materials. Job numbers should also be clearly marked on each piece. Mill test reports and material shipping documents must be held in each project's files.

Materials received into the shop must be stored in an acceptable manner so that they will not be damaged. Wood blocking must be used under items and they should be blocked in a manner that the weight from those above does not bend, twist or distort the ones below.

Structural steel members, hardware and equipment being shipped from this shop should be safely loaded, properly cribbed and secured onto the truck. Adequate blocking and tie-downs should be installed so that no damage or loss would occur. It is the driver's responsibility to verify that the load is properly balanced, blocked and secured onto the bed of the truck.
All accompanying documents, bills of laden and jobsite / vendor instructions should accompany each shipment in an envelope. All mill test reports, shipping tags and bills of laden should be clipped together and submitted to the shop superintendent for filing with other project documents.

Raw Material Storage

All work orders will be issued by the shop superintendent and delegated to the appropriate personnel. The workmen should familiarize themselves with the drawings that they are fabricating to and survey the materials to ensure that the have all the materials and the correct materials. Any damage, incorrect materials or shortages should be brought to the attention of the shop superintendent immediately. Only the superintendent has the authority to authorize the work to proceed under such conditions.

Detail work should be clearly marked and bundled by project. Plates, angles, etc. should be visually examined by the machine operator to ensure that all edges are cleanly sheared, cut, punched or drilled. Unacceptable edges will indicate either improper machine operation or defective machine parts. Any such situations should be brought to the immediate attention of the shop superintendent.

All layout work should be done from one end of the member. Working points should be center punched. Weld and hole sizes should be marked on the members. Columns and beams when ordered in double lengths should be clearly marked on each end to maintain traceability once cut.

Materials to be used for the fabrication of a member must be taken from stock ordered specifically for that project. Use of in-stock materials must be cleared with the shop superintendent first, who must ensure as a minimum, the following:

The piece is the correct size and shape
The material is the correct grade and type
The material is in good, first quality physical condition

Manufacture of Detail Pieces

Detail parts are the angles, clips, gussets, stiffeners, etc. that are attached to a structural member to make them work as designed and/or to connect to other members. These detail parts will be made within the designated shop area.

The shop foreman must review the following information prior to commencement of the fabrication of detail parts for a specific project:

Drawings are latest and approved
Materials are in stock and are the correct grade as per drawings

During and after the fabrication of detail pieces, the operator and later, shop foreman, must examine all pieces for acceptable sheared edges, acceptable punched holes and acceptable drilled holes. Flame cutting of detail pieces is only permitted when using a track guided torch assembly.

All detail pieces must be marked with the job number and relevant piece mark as per Papp's internal fabrication tracking procedures.

Joint Fit-up

Prior to welding, all joints must be examined by the welder for joint fit-up. The shop foreman must examine all joints to receive full penetration welds or other unusual welding procedures. All joint fit-ups must conform with the requirements of the AISC Code of Standard Practice for the Fabrication and Erection of Structural Steel Buildings and the American Welding Society.

Joints that are out of tolerance in accordance with the above referenced standards must be evaluated and either new detail pieces should be made or, in case of full penetration welds, qualified by testing to meet the requirements of the AWS D1.1 Structural Welding Code.

Burning and Flame cutting

Burning or Flame cutting is essential to the fabrication of structural steel members. However, it should be minimized and must be done by trained and experienced personnel when necessary. Burning is used to trim pieces, cope flanges, cut weld access holes and to cut sections.

Whenever burning or flame cutting is done, the roughness of the cut surface shall not be greater than that defined by the American National Standards Institute surface roughness of 1000 micro inches for material up to 4 inches thick and 2000 micro inches for materials 4 to 8 inches.

The surface shall be free of slag and occasional gouges less than 3/16 inch deep. Notches or gouges in the cut surface, that exceeds 3/16 inches, must be removed by grinding or machining with a slope towards the adjacent material surface. Gouges in excess of 3/16 inch can also be repaired by welding and grinding.

Beam copes must be cut with care to provide a smooth transition, free of notches and cuts past the point of tangency between the adjacent surface and shall meet the surface requirements stated above. Copes shall be free of sharp re-entrant corners in rolled members.

Weld access holes shall be made to the dimensions shown on the approved shop drawings and shall meet the notch free and surface roughness requirements as stated above. Weld access holes and beam copes shall be free of sharp re-entrant corners except that in fillet welded built up members, the cope or weld access hole shall terminate at 90° to the flange.

Punching and Drilling of Holes

Punching will be used to make bolt holes in detail pieces up to ½ inch. Drilling will be used to make bolt holes in beam and column webs and flanges and detail pieces greater than ½ inch thick. All bolt holes, whether punched or drilled shall meet the requirements of the AISC Code Specification for the Design, Fabrication and Erection of Structural Steel for Buildings.

Slotted holes shall be stated on the drawings as short or long slotted holes. Punched holes should be deburred to remove burrs that can impair proper bolting of the joints. Punches should be sharp and clean so as not to distort, rip or tear the base metal in or adjacent to the bolt hole. Detail pieces should be checked for straightness and flatness of surfaces to receive bolting. Any distorted, twisted or bent piece should be straightened prior to use or discarded as scrap.

Drilled holes will be made with magnetic base drills utilizing the correct size drill bits. Holes shall conform with the requirements of the AISC Code Specification for the Design, Fabrication and Erection of Structural Steel for Buildings. All standard holes shall be 1/8" larger than the nominal diameter of the bolt except for oversized holes where shown on drawings.

Welding

Welding must only be done by certified welders (exhibit 'C'). The shop welders are certified in different positions, processes, limits and materials. The foreman should ensure that welders are delegated to do welding for which they are certified and qualified. A list of shop welders and their limitations must be held in the superintendent's office. Welding must be done in accordance with applicable codes and Papp Iron Works written welding procedures (exhibits ' A' & 'B'). All groove welds must be visually examined after the root pass is installed and before the groove is filled in, by the foreman.

Welders must examine their welding equipment to ensure that they are in good working order. The shop foremen should visually examine the first few welds installed by each welder to ensure acceptability. Each welder will be assigned an identification stamp, which should be marked adjacent to their welds whenever the welds are groove welds, fracture critical welds or welds not listed as pre-qualified by the AWS D1.1 code.

The welder should visually examine each weld and check for weld size, undercut, porosity, or any other deficiency. Any deficiency should be reported to the shop superintendent who will investigate whether the equipment or materials are responsible for the deficiency. Any welder who consecutively produces four defective fillets or two defective groove welds may be subject to re-qualification, at the discretion of the shop superintendant.

Welding in cold weather may require preheating. All pre and post weld heat treatment should be done under the supervision of the shop superintendent and following written procedures. Whenever a project requires testing and inspection by an independent agency,
our client's representative should be notified at least one week prior to commencement of any work which may require such inspections.

Bolted Shop Connections

Bolted connections made in the shop shall be in accordance with the AISC Code for the use of ASTM A325 and A490 bolts. Connections that require field disassembly and re-assembly shall be bolted and left untightened. The correct size, bolt grade and same lot to be used in the field connections shall be installed in the shop connections.

Bolted connections that do not require any work in the field shall be bolted and tightened in their final positions in the shop. Tightening shall be done by calibrated wrench method or by using special electric wrenches for tension control bolts.

Torque values shall be determined for the bolts using a tension calibration device and checked with a calibrated torque wrench set on the same tension device using bolts from the same lot and batch.

Tagging and Marking completed pieces

All completed members shall be marked and tagged on the 'tagged end' as determined by field erection sequence drawings. Markings shall be clear and legible and shall contain the piece mark as shown on the fabrication detail drawing.

Members to receive shop primer shall be marked with a bleed thru crayon so that the marks are visible after painting. Members to receive sandblasting and special painting shall be tagged with a metallic hanging tag so that the markings remain with the member after painting. Members to receive galvanize coating shall be shipped with welded hanging tabs showing the piece number.

Surface Cleaning and Painting

Papp Iron Works, Inc, applies all "shop primer" applications in house. Other coatings, which require more extensive surface preparation and coating applications, will be shipped to an approved painting contractor, or galvanizing applicator for zinc coating. As a minimum, surfaces receiving shop primer should be manually cleaned to remove loose mill scale, soil or grease prior to painting.

The painting sub-contractor shall be experienced and qualified to perform the tasks required to provide a first quality paint job. The contractor shall have the minimum capabilities and standards:

- ✓ Adequate indoor facilities to lay-down materials received for painting.
- ✓ Adequate facilities and equipment to conduct activities such and equipment handling, sand blasting and spray painting of structural steel in accordance with the SSPC requirements.
- ✓ Adequate facilities to maintain and control humidity, temperature, wind and airborne dust particles so that blasting and painting activities can be accomplished in a manner acceptable to the paint manufacturer's specifications.
- ✓ The management and staff must have a training program and awareness program so that the operators and applicators are familiar with the requirements of the SSPC and various paint manufacturer's specifications. Such training program must include hands-on as well as classroom type instructions on the proper operation of the equipment they are using. Training must be documented and available for the owner or owner's representative to review if requested.
- ✓ Workmen must be able to readily determine whether the equipment and personnel are producing the required surface cleaning standards as defined by the SSPC, determine whether coatings are being applied in acceptable layer thicknesses and that the resultant surface texture is as desired.
- ✓ Adequate facilities to store finished materials in a manner that the surfaces would not be damaged.
- ✓ Adequate facilities to store raw materials. Materials should be inventoried and stocked in a FIFO basis to avoid the use of old and expired products. The facilities should also be capable of maintaining and monitoring temperatures within the acceptable storage range specified by the manufacturer.

No paint shall be applied within two inches of the faying surfaces of bolted connections and surfaces to receive field welding. Additionally, some projects have sections which

will receive spray on fireproofing insulation. Such members should be identified and marked for no paint on those projects that require standard shop primer.

All painting shall be done in an enclosed, designated area where the ambient temperature is at least 40°F. The floor shall be swept clean to prevent deleterious materials being blown onto the freshly painted surfaces.

Storage of Fabricated pieces

All fabricated members shall be stored in a designated staging area where they will not be mixed with other project materials. Blocking and cribbing shall be installed to prevent twisting, bending or distortion of the members from their own weight or the weight of pieces above. Painted members shall be padded in a manner to prevent damage to the paint coating.

Final Inspections

In-House Quality Control

Prior to shipment to the field, outside painter or zinc coating applicator, the shop foreman must visually examine all members to ensure that at a minimum the following conditions are met:

The members are completed and appropriately marked.
They have received shop primer if necessary
They have not been damaged during handling and storage
All of the pieces for that sequence was completed and are grouped together
All post fabrication shop changes are completed

Special Inspections

The project manager must be familiar with any special or additional inspections that are required on a specific project. Such special inspections may be the responsibility of Papp Iron Works, Inc. or the owner's agent. In all special inspections, an independent third party agency shall conduct these inspections and testing on behalf of Papp or the owner, depending on contractural obligations.

The shop superintendent must notify the project manager when special third party inspections are ready and such notification must be done in a timely manner so as to allow the third party to arrange to visit the shop and conduct the required inspections. The shop foreman must cooperate with any representative authorized to inspect the shop work and make necessary repairs as deemed needed by tests and inspections.

The shop superintendent is responsible for facilitating and cooperating with the independent inspector. Independent inspection agency representatives or other project representatives should be escorted to places where inspections are to be conducted. The shop superintendent should try to remove all pieces to be inspected from the work floor

Package II

Papp Iron Works, Inc

950 South Second Street, Plainfield, NJ. 07063
(908) 731-1000 Fax: (908) 757-3567

WELDING PROCEDURE SPECIFICATION

Company Name: Papp Iron Works, Inc. By: Freddie D. Shivdat
Welding Procedure Specification No: PIW-WPS-P4 Date: Jan. 5, '05 Supporting PQR No: NA
Revision No: 0 Date: Prequalified: Yes XX No
Welding Process(es): FCAW Type(s): Semi-Automatic

JOINTS **DETAILS**

Joint Design: TC-U4a -GF
Backing (Yes): X (No):
Backing Material (Type): 1" x ¼"

30° + 10° - 0

X Metal ☐ Nonfusing Metal
☐ Nonmetallic ☐ Other

Sketches, Production Drawings, Weld Symbols or Written Description should show the general arrangement of the parts to be welded. Where applicable, the root spacing and the details of the weld groove may be specified.

3/8" + 1/16"- 0"

T = 0.5 "

BASE METALS

P - No. Group No. to P - No. Group No.
OR
Specifications type and grade ASTM A572 Gr. 50
to Specification type and grade ASTM A572 Gr. 50
Thickness Range:
Base Metal: Groove 0.125" to 1.0" Fillet Any size, Any thickness
Welding Position: 1G Flat
Other Preheat - 50° min – 250 max Interpass – 400 max

FILLER METALS

Spec. No. (SFA) 5.20
AWS No. (Class) E7XT-X
F-No. 6
A-No. 1
Size of Filler Metals 0.068" Single electrode
Deposited Weld Metal 0.50" plus reinforcement – 1/8" max.
Thickness Range
Groove 1/8" to 0.50" ** Filler metal limitation
Fillet All
Electrode Flux (Class) N/A
Electrode Trade Name Lincoln –NR211-MP
Consumable Insert None
Other Wire stick out – ½" to 1"
Flow Rate: NA
Polarity: DCEN Amps: 120 -130 Volts: 13 - 17 Speed: Not Controlled

Approved for production by: Papp Iron Works, Inc.

Papp Iron Works, Inc

950 South Second Street, Plainfield, NJ. 07063
(908) 731-1000 Fax: (908) 757-3567

WELDING PROCEDURE SPECIFICATION

Company Name: Papp Iron Works, Inc. By: Freddie D. Shivdat
Welding Procedure Specification No: PIW-WPS-P5 Date: Jan. 5, '05 Supporting PQR No: NA
Revision No: 0 Date: Prequalified: Yes XX No
Welding Process(es): FCAW Type(s): Semi-Automatic

JOINTS **DETAILS**

Joint Design: TC-U4a -GF
Backing (Yes): X (No):
Backing Material (Type): 1" x ¼"

30° + 10° - 0

X Metal ☐ Nonfusing Metal
☐ Nonmetallic ☐ Other

Sketches, Production Drawings, Weld Symbols or Written Description should show the general arrangement of the parts to be welded. Where applicable, the root spacing and the details of the weld groove may be specified.

3/8" + 1/16"- 0"

T = 1.0 "

BASE METALS
P - No. Group No. to P - No. Group No.
OR
Specifications type and grade ASTM A572 Gr. 50
to Specification type and grade ASTM A572 Gr. 50
Thickness Range:
Base Metal: Groove 0.125" to unlimited Fillet Any size, Any thickness
Welding Position: 1G Flat
Other Preheat - 50° min – 250 max Interpass – 400 max

FILLER METALS
Spec. No. (SFA) 5.20
AWS No. (Class) B7XT-X
F-No. 6
A-No. 1
Size of Filler Metals 3/32" Single electrode
Deposited Weld Metal 1.0" plus reinforcement – 1/8" max.
Thickness Range
Groove 1/8" to unlimited
Fillet All
Electrode Flux (Class) N/A
Electrode Trade Name Lincoln –NR-311
Consumable Insert None
Other Wire stick out – 1.5"
Flow Rate: NA
Polarity: DCEN Amps: 175 -225 Volts: 18-24 Speed: Not Controlled

Approved for production by:
Papp Iron Works, Inc.

Papp Iron Works, Inc

950 South Second Street, Plainfield, NJ. 07063
(908) 731-1000 Fax: (908) 757-3567

WELDING PROCEDURE SPECIFICATION

Company Name: Papp Iron Works, Inc. By: Freddie D. Shivdat
Welding Procedure Specification No: PIW-WPS-P6 Date: Jan. 13, '05 Supporting PQR No: NA
Revision No: 0 Date: Prequalified: Yes XX No
Welding Process(es): FCAW Type(s): Semi-Automatic

JOINTS **DETAILS**

Joint Design: TC-U4a-GF
Backing (Yes): X (No):
Backing Material (Type): 1" x ¼"

45° + 10° - 0

X Metal ☐ Nonfusing Metal
☐ Nonmetallic ☐ Other

Sketches, Production Drawings, Weld Symbols or Written Description should show the general arrangement of the parts to be welded. Where applicable, the root spacing and the details of the weld groove may be specified.

1/4" + 1/16" - 0"

T = 1.0"

BASE METALS

P - No. Group No. to P - No. Group No.
OR
Specifications type and grade ASTM A572 Gr. 50
to Specification type and grade ASTM A572 Gr. 50
Thickness Range:
Base Metal: Groove 0.125" to unlimited Fillet Any size, Any thickness
Welding Position: All
Other Preheat - 50° min – 250 max Interpass – 400 max

FILLER METALS

Spec. No. (SFA) 5.20
AWS No. (Class) E71T-8J
F-No. 6
A-No. 1
Size of Filler Metals 0.068" Single electrode
Deposited Weld Metal 1.0" plus reinforcement – 1/8" max.
Thickness Range
Groove 1/8" to unlimited
Fillet All
Electrode Flux (Class) N/A
Electrode Trade Name Lincoln –NR-203MP
Consumable Insert None
Other Wire stick out – 0.75"
Flow Rate: NA
Polarity: DCEN Amps: 145 -265 Volts: 16-23 Wire Feed Speed: 70 – 150 in/m

Approved for production by:
Papp Iron Works, Inc.

Papp Iron Works, Inc

950 South Second Street, Plainfield, NJ. 07063
(908) 731-1000 Fax: (908) 757-3567

WELDING PROCEDURE SPECIFICATION

Company Name: Papp Iron Works, Inc. By: Freddie D. Shivdat
Welding Procedure Specification No: BU2a-P1a Date: Nov., 10, 1999 Supporting PQR No: NA
Revision No: 1 Date: 3/11/07 Prequalified: Yes XX No
Welding Process(es): SMAW Type(s): Manual

JOINTS

Joint Design: B-U2a
Backing (Yes): X (No):
Backing Material (Type): 1" x ¼"

X Metal ☐ Nonfusing Metal
☐ Nonmetallic ☐ Other

Sketches, Production Drawings, Weld Symbols or Written Description should show the general arrangement of the parts to be welded. Where applicable, the root spacing and the details of the weld groove may be specified.

DETAILS

45° + 10° - 0

1/4" + 1/16" - 0"

T = 1.0"

BASE METALS

P - No. Group No. to P - No. Group No.

OR

Specifications type and grade ASTM A572 Gr. 50
to Specification type and grade ASTM A572 Gr. 50
Thickness Range:
Base Metal: Groove 0.125" to unlimited Fillet Any size, Any thickness
Welding Position: All
Other Preheat - 50° min – 250 max Interpass – 400 max

FILLER METALS

Spec. No. (SFA) AWS A5.1, ASME SFA-5.1
AWS No. (Class) E7018
F-No. 4
A-No. 1
Size of Filler Metals 1/8" Single electrode
Deposited Weld Metal 0.50" plus reinforcement – 1/8" max.
Thickness Range
Groove Max. 1.0"
Fillet All
Electrode Flux (Class) N/A
Electrode Trade Name Lincoln Electric – Excalibur 7018
Consumable Insert None
Other NA
Flow Rate: NA
Polarity: DCEP Amps: 140-145 Volts: 19-22 Speed: Not controlled

Approved for production by
Papp Iron Works, Inc.

Papp Iron Works, Inc

950 South Second Street, Plainfield, NJ. 07063
(908) 731-1000 Fax: (908) 757-3567

WELDING PROCEDURE SPECIFICATION

Company Name: Papp Iron Works, Inc. By: Freddie D. Shivdat
Welding Procedure Specification No: BU2a-P3 Date: Nov., 10, 1999 Supporting PQR No: NA
Revision No: 1 Date: 6/21/04 Prequalified: Yes XX No
Welding Process(es): FCAW Type(s): Manual

JOINTS **DETAILS**

Joint Design: B-U2a-GF
Backing (Yes): X (No):
Backing Material (Type): 1" x ¼"

45° + 10° - 0

☒ Metal ☐ Nonfusing Metal
☐ Nonmetallic ☐ Other

Sketches, Production Drawings, Weld Symbols or Written Description should show the general arrangement of the parts to be welded. Where applicable, the root spacing and the details of the weld groove may be specified.

1/4" + 1/16"- 0"

T = 0.75 "

BASE METALS
P - No. Group No. to P - No. Group No.
OR
Specifications type and grade ASTM A572 Gr. 50
to Specification type and grade ASTM A572 Gr. 50
Thickness Range:
Base Metal: Groove 0.125" to 1.50" Fillet Any size, Any thickness
Welding Position: 1G Flat
Other Preheat - 50° min – 250 max Interpass – 400 max

FILLER METALS
Spec. No. (SFA) 5.20
AWS No. (Class) E7XT-X
F-No. 6
A-No. 1
Size of Filler Metals 0.045" Single electrode
Deposited Weld Metal 0.750" plus reinforcement – 1/8" max.
Thickness Range
Groove Max. 1.50"
Fillet All
Electrode Flux (Class) N/A
Electrode Trade Name Frontiarc – 711
Consumable Insert None
Other Shielding Gas - CO^2
Flow Rate: 35 to 40 cfm
Polarity: DCEN Amps: 200 - 250 Volts: 25 - 27 Speed: Not Controlled

Approved for production by:
Papp Iron Works, Inc.

Papp Iron Works, Inc

950 South Second Street, Plainfield, NJ. 07063
(908) 731-1000 Fax: (908) 757-3567

WELDING PROCEDURE SPECIFICATION

Company Name: Papp Iron Works, Inc. By: Freddie D. Shivdat
Welding Procedure Specification No: Papp-BU4a Date: April. 14, 2003 Supporting PQR No: NA
Revision No: 0 Date: Prequalified: Yes XX No
Welding Process(es): GMAW Type(s): Manual

JOINTS **DETAILS**

Joint Design: B-U4a
Backing (Yes): X (No):
Backing Material (Type): 1" x ¼"

45° + 10° - 0

☐ Metal ☐ Nonfusing Metal
☐ Nonmetallic ☐ Other

Sketches, Production Drawings, Weld Symbols or Written Description should show the general arrangement of the parts to be welded. Where applicable, the root spacing and the details of the weld groove may be specified.

1/4" + 1/16"- 0"

T = 0.375 "

BASE METALS
P - No. Group No. to P - No. Group No.
OR
Specifications type and grade ASTM A572 Gr. 50
to Specification type and grade ASTM A572 Gr. 50
Thickness Range:
Base Metal: Groove 0.125" to 0.750" Fillet Any size, Any thickness
Welding Position: Vertical Up Hill
Other Preheat - 50° min – 250 max Interpass – 400 max

FILLER METALS
Spec. No. (SFA) 5.18 SMAW
AWS No. (Class) ER70S-X
F-No. 4
A-No. 1
Size of Filler Metals 0.035" Single electrode
Deposited Weld Metal 0.375" plus reinforcement – 1/8" max.
Thickness Range
Groove Max. 0.750"
Fillet All
Electrode Flux (Class) N/A
Electrode Trade Name American Welding Products, Inc.
Consumable Insert None
Other ** Shielding Gas CO^2/Ar – 50/50 mix
Flow Rate: 25 CFM
Polarity: DCEP Amps: 160-180 Volts: 24-25 Speed: 8 – 10 ipm.

Approved for production by:
Papp Iron Works, Inc.

Papp Iron Works, Inc

950 South Second Street, Plainfield, NJ. 07063
(908) 731-1000 Fax: (908) 757-3567

WELDING PROCEDURE SPECIFICATION

Company Name: Papp Iron Works, Inc. By: Freddie D. Shivdat
Welding Procedure Specification No: Papp-1G Date: April. 14, 2003 Supporting PQR No: NA
Revision No: 0 Date: Prequalified: Yes XX No
Welding Process(es): SMAW Type(s): Manual

JOINTS **DETAILS**

Joint Design: B-U2a
Backing (Yes): X (No):
Backing Material (Type): 1" x ¼"

45° + 10° - 0

☐ Metal ☐ Nonfusing Metal
☐ Nonmetallic ☐ Other

Sketches, Production Drawings, Weld Symbols or Written Description should show the general arrangement of the parts to be welded. Where applicable, the root spacing and the details of the weld groove may be specified.

1/4" + 1/16" - 0"

T = 0.375 "

BASE METALS

P - No. Group No. to P - No. Group No.

OR

Specifications type and grade ASTM A572 Gr. 50
to Specification type and grade ASTM A572 Gr. 50
Thickness Range:
Base Metal: Groove 0.125" to 0.750" Fillet Any size, Any thickness
Welding Position: Flat
Other Preheat - 50° min – 250 max Interpass – 400 max

FILLER METALS

Spec. No. (SFA) 5.10 SMAW
AWS No. (Class) E7018
F-No. 4
A-No. 1
Size of Filler Metals 1/8", 3/32" & 5/32" Single electrode
Deposited Weld Metal 0.375" plus reinforcement – 1/8" max.
Thickness Range
Groove Max. 0.750"
Fillet All
Electrode Flux (Class) N/A
Flux Trade Name N/A
Consumable Insert None
Other NA
Flow Rate: NA
Polarity: DCEP Amps: 200-250 Volts: 24-27 Speed: 8 – 10 ipm

Approved for production by:
Papp Iron Works, Inc.

Papp Iron Works, Inc

950 South Second Street, Plainfield, NJ. 07063
(908) 731-1000 Fax: (908) 757-3567

WELDING PROCEDURE SPECIFICATION

Company Name: Papp Iron Works, Inc. By: Freddie D. Shivdat
Welding Procedure Specification No: FCAW-P6 Date: Aug. 12, '04 Supporting PQR No: NA
Revision No: 0 Date: Prequalified: Yes XX No
Welding Process(es): FCAW Type(s): Semi-Automatic

JOINTS **DETAILS**

Joint Design: TC-U4a -GF
Backing (Yes): X (No):
Backing Material (Type): 1" x ¼"

45° + 10° - 0

X Metal ☐ Nonfusing Metal
☐ Nonmetallic ☐ Other

Sketches, Production Drawings, Weld Symbols or Written Description should show the general arrangement of the parts to be welded. Where applicable, the root spacing and the details of the weld groove may be specified.

1/4" + 1/16" - 0"

BASE METALS

P - No. Group No. II to P - No. Group No. II
OR
Specifications type and grade ASTM A106 Gr. B
to Specification type and grade ASTM A 36
Thickness Range:
Base Metal: Groove Unlimited Fillet Any size, Any thickness
Welding Position: All Positions Allowed
Other Preheat - 50° min – 250 max Interpass – 400 max

FILLER METALS

Spec. No. (SFA) 5.20
AWS No. (Class) E7XT-X
F-No. 6
A-No. 1
Size of Filler Metals 0.045" Single electrode
Deposited Weld Metal T + 1/8" max.
Thickness Range
Groove Unlimited
Fillet All
Electrode Flux (Class) N/A
Electrode Trade Name Frontiarc – 711
Consumable Insert None
Other Shielding Gas - CO^2
Flow Rate: 35 to 40 cfm
Polarity: DCEN Amps: 200 - 250 Volts: 25 - 27 Speed: 6 – 8 ipm

Approved for production by:
Papp Iron Works, Inc.

Index

Package I	*Quality Control Plan*
Package II	*Welding Procedure Specs* *Welder & Welding Oper. Qual. Test Record*
Package III	*Certifications*

Papp Iron Works, Inc.
950 South Second Street, Plainfield, NJ. 07063
Tel: (908) 731-1000 Fax: (908) 757-3567

WELDER and WELDING OPERATOR QUALIFICATION TEST RECORD

Welder or Welding Operator: Robert Aimone Identification No: _____
Welding process SMAW Manual XX Semiautomatic _____ Polarity _____
Position Overhead (4G)
(Flat, horizontal, overhead or vertical - if vertical, state whether upward or downhill)
In accordance with procedure specification no. B-U2a-P1a Revision No: 1
Material specification ASTM A 36 Carbon Steel Plate
Diameter and wall thickness (if pipe) otherwise, joint thickness 1" thick
Thickness range this qualifies: Groove 1/8" to unlimited Fillet All

Filler Metal

Specification no. AWS A5.1 Classification E7018 F no. 4
Describe filler metal if not covered by AWS Specification NA
Is backing Strip used ?: Yes
Filler metal diameter and trade name Lincoln Excalibur 1/8"
Flux for submerged arc or gas for gas metal of flux cored arc welding NA

Visual Inspection

Appearance Good Undercut None Piping Porosity None

Guided Bend Test Results

Type	Result	Type	Result
Side	Acceptable		
Side	Acceptable		

Test conducted by Freddie D. Shivdat Laboratory test no. RA – 4G 1 & 2
CWI # 91050351
Organization AQM, Inc. Test date March 11, 2007

We, the undersigned, certify that the statements in this record are correct and that the welds were prepared, welded and tested in accordance with the requirements sect. 4 of the ANSI / AWS D1.1 Code, (2006) Structural Welding Code - Steel.
(Year)

Contractor Papp Iron Works, Inc. Authorized By: _____
Date 3/14/07

950 South Second Street, Plainfield, NJ. 07063
Tel: (908) 731-1000 Fax: (908) 757-3567

WELDER and WELDING OPERATOR QUALIFICATION TEST RECORD

Welder or Welding Operator: William A. Bickhardt Identification No: _____
Welding process SMAW Manual XX Semiautomatic _____ Polarity _____
Position Vertical Uphill – (3F)
(Flat, horizontal, overhead or vertical - if vertical, state whether upward or downhill)
In accordance with procedure specification no. PIW-P9 Revision No: 0
Material specification ASTM A 572 Carbon Steel Plate
Diameter and wall thickness (if pipe) otherwise, joint thickness 3/8" thick
Thickness range this qualifies: Groove 1/8" to 3/8" Fillet Single pass

Filler Metal

Specification no. AWS A5.1 Classification E7018 F no. 4
Describe filler metal if not covered by AWS Specification NA
Is backing Strip used ?: NA
Filler metal diameter and trade name Lincoln Excalibur 1/8"
Flux for submerged arc or gas for gas metal of flux cored arc welding NA

Visual Inspection

Appearance Good Undercut None Piping Porosity None

Fillet Test Results

Appearance: Acceptable profile and leg distribution Fillet Size: 5/16"
Fracture Test Root Penetration: Acceptable – complete Macroetch: Accept – complete fusion

Test conducted by Freddie D. Shivdat Laboratory test no. WAB – 1 & 2
CWI # 91050351
Organization AQM, Inc. Test date March 11, 2007

We, the undersigned, certify that the statements in this record are correct and that the welds were prepared, welded and tested in accordance with the requirements sect. 4 of the ANSI / AWS D1.1 Code, (2006) Structural Welding Code - Steel.
(Year)

Contractor Papp Iron Works, Inc. Authorized By: _____
Date 2/4/10

Papp Iron Works, Inc

950 South Second Street, Plainfield, NJ. 07063
(908) 731-1000 Fax: (908) 757-3567

WELDER and WELDING OPERATOR QUALIFICATION TEST RECORD

Welder or welding operator's name G. Olekszyk Identification No: ___
Welding process FCAW Manual ___ Semiautomatic XX Machine ___
Position 1G, Flat
(Flat, horizontal, overhead or vertical - if vertical, state whether upward or downhill)
In accordance with procedure specification no. BU2a-P3
Material specification ASTM A36 Carbon Steel
Diameter and wall thickness (if pipe) otherwise, joint thickness 0.75" plate
Thickness range this qualifies 1/8" to 1.5" thick plate

Filler Metal

Specification no. AWS A5.20 Classification E7XT-X F no. 6
Describe filler metal if not covered by AWS specification NA
Is backing strip used ? Yes
Filler metal diameter and trade name Frontiarc 711 x 0.045" diameter
Flux for submerged arc or gas for gas metal of flux cored arc welding CO^2

Visual Inspection (9.25.1)

Appearance Good Undercut None Piping Porosity None

Guided Bend Test Results

Type	Result	Type	Result
Side	Acceptable		
Side	Acceptable		

Test conducted by AQM Corporation Laboratory test no. GO-1G-1 & 2
Per Freddie D. Shivdat Test date Nov., 15, 1999
(AWS CWI # 91050351)

We, the undersigned, certify that the statements in this record are correct and that the welds were prepared and tested in accordance with the requirements of the ANSI / AWS D1.1 Code, 1999 edition.

Manufacturer or Contractor Papp Iron Works, Inc
Authorized by Cezary Sosidko
Date 2/4/10

Papp Iron Works, Inc.

950 South Second Street, Plainfield, NJ. 07063
Tel: (908) 731-1000 Fax: (908) 757-3567

WELDER and WELDING OPERATOR QUALIFICATION TEST RECORD

Welder or Welding Operator: Wilson Encarnacion Identification No: __
Welding process FCAW Manual Semiautomatic XX Polarity
Position Vertical uphill (3G)
(Flat, horizontal, overhead or vertical - if vertical, state whether upward or downhill)
In accordance with procedure specification no. BU2a-P3 Revision No: 1
Material specification ASTM A 572 Carbon Steel Plate
Diameter and wall thickness (if pipe) otherwise, joint thickness 3/4" thick
Thickness range this qualifies: Groove 1/8" to 1 ½" Plate Fillet All

Filler Metal

Specification no. AWS A5.20 Classification E7XT-X F no. 6
Describe filler metal if not covered by AWS Specification Frontiarc - 711
Is backing Strip used ?: Yes
Filler metal diameter and trade name 0.045" Kobelco Frontiarc - 711
Flux for submerged arc or gas for gas metal or flux cored arc welding CO^2

Visual Inspection

Appearance Good Undercut None Piping Porosity None

Guided Bend Test Results

Type	Result	Type	Result
Side	Acceptable		
Side	Acceptable		

Test conducted by Freddie D. Shivdat Laboratory test no. WE- FCAW-3G: 1 & 2
CWI # 91050351
Organization AQM, Inc. Test date July 12, 2004

We, the undersigned, certify that the statements in this record are correct and that the welds were prepared, welded and tested in accordance with the requirements sect. 4 of the ANSI / AWS D1.1 Code, (2004) Structural Welding Code - Steel.
(Year)

Contractor Papp Iron Works, Inc. Authorized By:
Date 8/4/04

Papp Iron Works, Inc

950 South Second Street, Plainfield, NJ. 07063
(908) 731-1000 Fax: (908) 757-3567

WELDER and WELDING OPERATOR QUALIFICATION TEST RECORD

Welder or welding operator's name E. Appolon Identification No: _____
Welding process FCAW Manual _____ Semiautomatic XX Machine _____
Position 1G, Flat
(Flat, horizontal, overhead or vertical - if vertical, state whether upward or downhill)
In accordance with procedure specification no. BU2a-P3
Material specification ASTM A36 Carbon Steel
Diameter and wall thickness (if pipe) otherwise, joint thickness 0.75" plate
Thickness range this qualifies 1/8" to 1.5" thick plate

Filler Metal

Specification no. AWS A5.20 Classification E7XT-X F no. 6
Describe filler metal if not covered by AWS specification NA
Is backing strip used ? Yes
Filler metal diameter and trade name Frontiarc 711 x 0.045" diameter
Flux for submerged arc or gas for gas metal of flux cored arc welding CO^2

Visual Inspection (9.25.1)

Appearance Good Undercut None Piping Porosity None

Guided Bend Test Results

Type	Result	Type	Result
Side	Acceptable		
Side	Acceptable		

Test conducted by AOM Corporation Laboratory test no. EA-1G-1 & 2
Per Freddie D. Shivdat Test date Nov., 15, 1999
(AWS CWI # 91050351)

We, the undersigned, certify that the statements in this record are correct and that the welds were prepared and tested in accordance with the requirements of the ANSI / AWS D1.1 Code, 1999 edition.

Manufacturer or Contractor Papp Iron Works, Inc
Authorized by Cezary Sosidko
Date 2/4/10

Papp Iron Works, Inc

950 South Second Street, Plainfield, NJ. 07063
(908) 731-1000 Fax: (908) 757-3567

WELDER and WELDING OPERATOR QUALIFICATION TEST RECORD

Welder or welding operator's name E.Wojtala Identification No: -
Welding process FCAW Manual Semiautomatic XX Machine
Position 1G, Flat
(Flat, horizontal, overhead or vertical - if vertical, state whether upward or downhill)
In accordance with procedure specification no. BU2a-P3
Material specification ASTM A36 Carbon Steel
Diameter and wall thickness (if pipe) otherwise, joint thickness 0.75" plate
Thickness range this qualifies 1/8" to 1.5" thick plate

Filler Metal

Specification no. AWS A5.20 Classification E7XT-X F no. 6
Describe filler metal if not covered by AWS specification NA
Is backing strip used ? Yes
Filler metal diameter and trade name Frontiarc 711 x 0.045"diameter
Flux for submerged arc or gas for gas metal of flux cored arc welding CO^2

Visual Inspection (9.25.1)

Appearance Good Undercut None Piping Porosity None

Guided Bend Test Results

Type	Result	Type	Result
Side	Acceptable		
Side	Acceptable		

Test conducted by AQM Corporation Laboratory test no. EW-1G-1 & 2
Per Freddie D. Shivdat Test date Nov., 15, 1999
(AWS CWI # 91050351)

We, the undersigned, certify that the statements in this record are correct and that the welds were prepared and tested in accordance with the requirements of the ANSI / AWS D1.1 Code, 1999 edition.

Manufacturer or Contractor Papp Iron Works, Inc
Authorized by Cezary Sosidko
Date 2/4/10

Papp Iron Works, Inc

950 South Second Street, Plainfield, NJ. 07063
(908) 731-1000 Fax: (908) 757-3567

WELDER and WELDING OPERATOR QUALIFICATION TEST RECORD

Welder or welding operator's name Kazimierz Maczka Identification No: _____
Welding process GMAW Manual _____ Semiautomatic XX Machine _____
Position 3G, Overhead
(Flat, horizontal, overhead or vertical - if vertical, state whether upward or downhill)
In accordance with procedure specification no. BU2a-P2a
Material specification ASTM A36 Carbon Steel
Diameter and wall thickness (if pipe) otherwise, joint thickness 0.50" plate
Thickness range this qualifies 1/8" to 1.0" thick plate

Filler Metal

Specification no. AWS A5.18 Classification ER70S-X F no. 6
Describe filler metal if not covered by AWS specification NA
Is backing strip used ? Yes
Filler metal diameter and trade name Lincoln Electric Co. 0.035"
Flux for submerged arc or gas for gas metal of flux cored arc welding CO_2 / Ar 50/50

Visual Inspection (9.25.1)

Appearance Good Undercut None Piping Porosity None

Guided Bend Test Results

Type	Result	Type	Result
Side	Acceptable		
Side	Acceptable		

Test conducted by AQM Corporation Laboratory test no. KM-1G-1 & 2
Per Freddie D. Shivdat Test date Nov., 15, 1999
(AWS CWI # 91050351)

We, the undersigned, certify that the statements in this record are correct and that the welds were prepared and tested in accordance with the requirements of the ANSI / AWS D1.1 Code, 1999 edition.

Manufacturer or Contractor Papp Iron Works, Inc
Authorized by Cezary Sosidko
Date 2/4/10

Papp Iron Works, Inc

950 South Second Street, Plainfield, NJ. 07063
(908) 731-1000 Fax: (908) 757-3567

WELDER and WELDING OPERATOR QUALIFICATION TEST RECORD

Welder or welding operator's name D. Boatwright Identification No: _____
Welding process GMAW Manual _____ Semiautomatic XX Machine _____
Position 1G, Flat
(Flat, horizontal, overhead or vertical - if vertical, state whether upward or downhill)
In accordance with procedure specification no. BU2a-P2
Material specification ASTM A36 Carbon Steel
Diameter and wall thickness (if pipe) otherwise, joint thickness 0.50" plate
Thickness range this qualifies 1/8" to 1.0" thick plate

Filler Metal

Specification no. AWS A5.18 Classification ER70S-X F no. 6
Describe filler metal if not covered by AWS specification NA
Is backing strip used ? Yes
Filler metal diameter and trade name Lincoln Electric Co. 0.035"
Flux for submerged arc or gas for gas metal of flux cored arc welding CO_2 / Ar 50/50

Visual Inspection (9.25.1)

Appearance Good Undercut None Piping Porosity None

Guided Bend Test Results

Type	Result	Type	Result
Side	Acceptable		
Side	Acceptable		

Test conducted by AOM Corporation Laboratory test no. DB-1G-1 & 2
Per Freddie D. Shivdat Test date Nov., 15, 1999
(AWS CWI # 91050351)

We, the undersigned, certify that the statements in this record are correct and that the welds were prepared and tested in accordance with the requirements of the ANSI / AWS D1.1 Code, 1999 edition.

Manufacturer or Contractor Papp Iron Works, Inc
Authorized by Cezary Sosidko
Date 2/4/10

Papp Iron Works, Inc

950 South Second Street, Plainfield, NJ. 07063
(908) 731-1000 Fax: (908) 757-3567

WELDER and WELDING OPERATOR QUALIFICATION TEST RECORD

Welder or welding operator's name K. Kaczkowski Identification No: _____
Welding process GMAW Manual _____ Semiautomatic XX Machine _____
Position 1G, Flat
(Flat, horizontal, overhead or vertical - if vertical, state whether upward or downhill)
In accordance with procedure specification no. BU2a-P2
Material specification ASTM A36 Carbon Steel
Diameter and wall thickness (if pipe) otherwise, joint thickness 0.50" plate
Thickness range this qualifies 1/8" to 1.0" thick plate

Filler Metal

Specification no. AWS A5.18 Classification ER70S-X F no. 6
Describe filler metal if not covered by AWS specification NA
Is backing strip used ? Yes
Filler metal diameter and trade name Lincoln Electric Co. 0.035"
Flux for submerged arc or gas for gas metal of flux cored arc welding CO_2 / Ar 50/50

Visual Inspection (9.25.1)

Appearance Good Undercut None Piping Porosity None

Guided Bend Test Results

Type	Result	Type	Result
Side	Acceptable		
Side	Acceptable		

Test conducted by AQM Corporation Laboratory test no. KK-1G-1 & 2
Per Freddie D. Shivdat Test date Nov., 15, 1999
(AWS CWI# 91050351)

We, the undersigned, certify that the statements in this record are correct and that the welds were prepared and tested in accordance with the requirements of the ANSI / AWS D1.1 Code, 1999 edition.

Manufacturer or Contractor Papp Iron Works, Inc
Authorized by Cezary Sosidko
Date 2/4/10

NYC Buildings

WELDER

Name: Guy Salone

License No: [redacted]

Issue Date: 07/27/2010

Exp. Date: 08/31/2013

CLASS: 1

Commissioner's Signature

WELDER

Name
Guy Salone

Address [redacted]

City [redacted]

State Zip [redacted]

W007461

Salone

Allegheny Ludlum

Jessop Specialty Products
600 Green Street
Washington, PA 15301

CERTIFIED MATERIAL TEST REPORT

TOOK ORDER NO.	T29560
MEMO NO.	159069-00
DATE	11/24/1998
SALESMAN NO.	582

D. A. O'Connor
AUTHORIZED SIGNATURE

EXHIBIT 2

Ship ROLLED ALLOYS
To 125 W STERNS RD
TEMPERANCE MI 48182

ROLLED ALLOYS INC
125 W STERNS RD
P O BOX 310
TEMPERANCE MI 48182

TRACER # BELOW

JESSOP UNS N08020 ALLOY HRAP
ASME SB-463-97; ASTM B463-93; 20CB-3; UNS N08020
DIN 50049 (2.1, 2.2, 2.3, 3.1.B);

Heat	Slip	Lot No		Size	Pcs	Weight	
782640	45236 A	55398	1.0000 x	72.0000 x 252.0000	1	5449	TR: 46364
782652	45235 B	55601	.2500 x	96.0000 x 248.0000	1	1871	TR: 46365
782652	45235 C	55601	.2500 x	96.0000 x 247.0000	1	1863	TR: 46366
782652	45235 A	55601	.2500 x	96.0000 x 250.0000	1	1886	TR: 46367

Heat	C	MN	P	S	SI	NI	CR	MO	CU	CB	FE
782640	.018	.34	.018	.0004	.24	34.10	19.47	2.12	.104	3.16	.464	39.79
782652	.019	.44	.019	.0004	.24	33.94	19.49	2.11	.17	3.15	.455	39.99

Lot No	Gauge	Yield Strength	Tensile Strength	Elong	Red. of Area	Hardness	Bend	Corrosion	Grain Size
55398	1.0000	49.0 KSI	95.6 KSI	45.0	64.0	BHN156			
55601	.2500	50.2 KSI	93.4 KSI	43.0	70.0	BHN170			

CB = CB+TA
QUALITY ASSURANCE
MATERIAL WAS INSPECTED, TESTED AND IS CERTIFIED IN ACCORDANCE WITH DIN 50049-3.1 B
MATERIAL WAS NOT WELD REPAIRED
MATERIAL WAS PRODUCED WITHOUT KNOWN CONTACT WITH MERCURY

SAMPLE

Job No: _____
Project: _____

ROLLED ALLOYS QUALITY ASSURANCE
Approved _____
Date 11-30-98

EXCEPT AS OTHERWISE NOTED, THIS MATERIAL HAS BEEN MANUFACTURED AND TESTED IN ACCORDANCE WITH THE LISTED SPECIFICATIONS AND RESULTS CONFORM TO THE SPECIFICATION AND ORDER REQUIREMENTS.

EXHIBIT "E"

Papp Iron Works, Inc.
950 Second Street, Plainfield, NJ. 07063
tel: (908) 731-1000 fax: (908) 757-3567

Material Receiving Inspection Form

This form must be used to document the inspection of materials before they are released for fabrication

Project: _____ Date: _____

Customer: _____

Owner: _____

Vendor: _____

Description of materials (this shipment): _____

_____

Grade / Type: _____ Accept: _____ Reject: _____

Physical Condition: Excess Rust: _____ Visible damage: _____

Size: _____ Length: _____

Grade Marked: _____ Job / PO Marked: _____

Special Order Information: Rolled Shape: _____

Coating: _____

Prefabrication: _____

Remarks: _____

_____

Receiver: _____ QA Supervisor: _____

SAMPLE

Package III

American Welding Society

Certifies that Welding Inspector

Freddie D Shivdat

has complied with the requirements of AWS QC1,
Standard for AWS Certification of Welding Inspectors

91050351
CERTIFICATE NUMBER

May 1 2012
EXPIRATION DATE

Victor J. Matthews
PRESIDENT AWS

CHAIR, QUALIFICATION COMMITTEE

CHAIR, CERTIFICATION COMMITTEE

American Welding Society

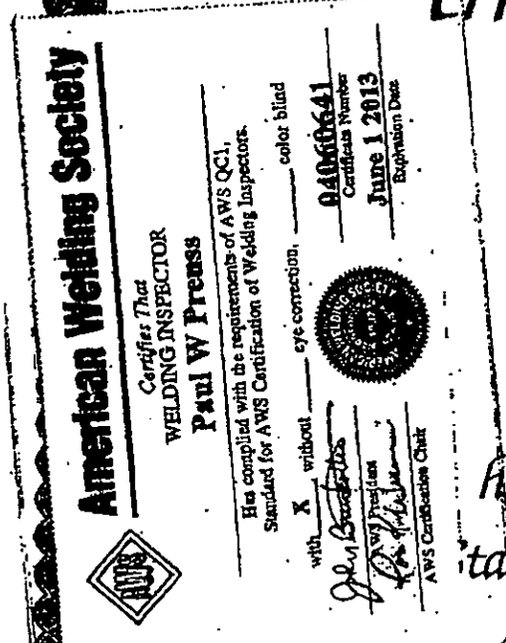

Certifies that Welding Inspector

Paul W Preuss

has complied with the requirements of AWS QC1,
Standard for AWS Certification of Welding Inspectors

04060641
CERTIFICATE NUMBER

June 1 2013
EXPIRATION DATE

PRESIDENT AWS

CHAIR, QUALIFICATION COMMITTEE

CHAIR, CERTIFICATION COMMITTEE

THE PORT AUTHORITY OF NY & NJ

Contractor: VRH

Contract Number: BT-200-200 W.O. #12

Location: PABT / S. Wing

VRH: 1 Super → general supervision
2 Laborers → general clean-up

Fine painting

1 Painter → removed peel away from handrails, stringers, etc.

Grenader:

3 Men → placing asphalt around stair hut E.

I certify that I have read the applicable paragraphs from the PA Construction Standards manual pertaining to the work/tests described above.

Shift: 6:30 AM - 3:15 PM

Date: 7/23/10

Signed: R. Rodriguez

Counter Signed: X

USE FORM 316 TO NOTE LABOR, MATERIAL OR EQUIPMENT USAGE

THE PORT AUTHORITY OF NY & NJ

DAILY NARRATIVE — PA 0327/4-05

Contractor: VRH **Contract Number:** BT 200.200 WO # 12

Location: PABT - Emergency Stair Repair

7th Floor South Wing

VRH (1 Supr, 1 Labr) provided supervision and coordination for abatement work at Hut D and waterproofing operations at Hut E.

Fine (2 Painters) continued lead abatement on select locations in Hut D. Operation includes removing peel away at select location in Hut D as per the environmental report.

Grenadier (3 laborers) continued installation of kemper waterproofing at Hut D. Operation also included installation of brick at Hut E as per contract work.

I certify that I have read the applicable paragraphs from the PA Construction Standards manual pertaining to the work/tests described above.

Shift 6:30 am - 3-15pm

Date 7/22/2010

Signed [signature] **Counter Signed** A

Use form PA 316 to note labor, material or equipment usage

THE PORT AUTHORITY OF NY & NJ

DAILY NARRATIVE — PA 0327/4-05

Contractor: VRH **Contract Number:** BT 200.200 WO # 12

Location: PABT - Emergency Stair Repair

7th Floor South Wing

VRH (1 Supr, 1 Labr) provided supervision and coordination for abatement work at select areas in Hut D. Operation also includes prep work for at Hut E for waterproofing installation.

Fine (2 Painters) continued lead abatement on select locations in Hut D. Operation includes applying peel away at the door entrance near the 4th floor.

Grenadier (3 laborers) continued applying the kemper waterproofing membrane at Huts D & E as per contract drawings.

I certify that I have read the applicable paragraphs from the PA Construction Standards manual pertaining to the work/tests described above.

Shift 6:30 am - 3-15pm

Date 7/21/2010

Signed [signature] **Counter Signed** A

Use form PA 316 to note labor, material or equipment usage

THE PORT AUTHORITY OF NY & NJ

DAILY NARRATIVE — PA 0327/4-05

Contractor: VRH **Contract Number:** BT 200.200 WO # 12

Location: PABT - Emergency Stair Repair

7th Floor South Wing

VRH (1 Supr, 1 Labr) provided supervision and coordination for abatement work at Hut D and waterproofing operations at Hut E.

Fine (2 Painters) continued lead abatement on select locations in Hut D. Operation includes removing peel away at select location in Hut D as per the environmental report.

Grenadier (3 laborers) addressed existing steel at Hut E for future installation of waterproofing. Operation includes cleaning steel to allow for the appropriate waterproofing bond.

I certify that I have read the applicable paragraphs from the PA Construction Standards manual pertaining to the work/tests described above.

Shift 6:30 am - 3-15pm

Date 7/20/2010

Signed J. McNulty **Counter Signed**

Use form PA 316 to note labor, material or equipment usage

THE PORT AUTHORITY OF NY & NJ

DAILY NARRATIVE — PA 03274-05

Contractor: VRH **Contract Number:** BT 200.200 WO # 12

Location: PABT - Emergency Stair Repair

7th Floor South Wing

VRH (1 Supr, 1 Labr) provided supervision and coordination for abatement work at select areas in Hut D. Operation includes a general cleanup at the end of the shift.

Fine (2 Painters) continued lead abatement on select locations in Hut D. Operation includes applying peel away at select location in Hut D as per the environmental report.

Grenadier (3 laborers) continued applying the kemper waterproofing membrane at Hut E as per contract drawings.

I certify that I have read the applicable paragraphs from the PA Construction Standards manual pertaining to the work/tests described above.

Shift 6:30 am - 3-15pm

Date 7/19/2010

Signed J. McNelis **Counter Signed** X

Use form PA 316 to note labor, material or equipment usage

THE PORT AUTHORITY OF NY & NJ

DAILY NARRATIVE — PA 03274-05

Contractor: VRH **Contract Number:** BT 200.200 WO # 12

Location: PABT - Emergency Stair Repair

7th Floor South Wing

VRH (1 Supr, 1 Labr) provided supervision and coordination for abatement work and patching at select areas in Hut C. Operation includes a general cleanup at the end of the shift.

Fine (2 Painters) continued lead abatement on wall and door locations on the 4th floor of Hut C. Operation includes applying and removing peel away at select location in Hut C as per the environmental report

Grenadier (3 laborers) continued applying stainless steel flashing and waterproofing on the 7th floor of Hut E. Operation also includes application of the membrane primer at Hut D as per contract details.

I certify that I have read the applicable paragraphs from the PA Construction Standards manual pertaining to the work/tests described above.

Shift 6:30 am - 3-15pm

Date 7/16/2010

Signed [signature] **Counter Signed** X

Use form PA 316 to note labor, material or equipment usage

THE PORT AUTHORITY OF NY & NJ

DAILY NARRATIVE — PA 03274-05

Contractor: VRH **Contract Number:** BT 200.200 WO # 12

Location: PABT - Emergency Stair Repair

7th Floor South Wing

VRH (1 Supr, 1 Labr) provided supervision for lead abatement on select areas in Hut C. Operation also includes assistance with cleanup for patching repairs at Hut E.

Fine (2 Painters) continued lead abatement operations at select locations at the 4th and 5th floors of Hut C. Operation includes removing peel away at locations where it has been applied.

Grenadier (3 laborers) continued applying patching material to spall locations along the inside of Hut E. Operation included installation of stainless steel pieces as per contract requirements around the bulkhead of the Hut area.

I certify that I have read the applicable paragraphs from the PA Construction Standards manual pertaining to the work/tests described above.

Shift 6:30 am - 3-15pm

Date 7/15/2010

Signed [redacted] **Counter Signed** [redacted]

Use form PA 316 to note labor, material or equipment usage

THE PORT AUTHORITY OF NY & NJ

DAILY NARRATIVE — PA 03-74-05

Contractor: VRH **Contract Number:** BT 200.200 WO # 12

Location: PABT - Emergency Stair Repair

7th Floor South Wing

VRH (1 Supr, 1 Labr) provided supervision and coordination for abatement work and patching at select areas in Hut C. Operation includes a general cleanup at the end of the shift.

Fine (2 Painters) continued lead abatement on wall locations between the 4th and 5th floors of Hut C. Operation includes removing peel away at locations where it has been applied during previous work shifts.

Grenadier (3 laborers) continued applying patching material to spall locations along the inside of Hut E. Operation included a general cleanup of the work area prior to the completion of the shift.

I certify that I have read the applicable paragraphs from the PA Construction Standards manual pertaining to the work/tests described above.

Shift 6:30 am - 3-15pm

Date 7/14/2010

Signed Sal Nicholas **Counter Signed**

Use form PA 316 to note labor, material or equipment usage

THE PORT AUTHORITY OF NY & NJ

DAILY NARRATIVE — PA 0327/4-05

Contractor: VRH **Contract Number:** BT 200.200 WO # 12

Location: PABT - Emergency Stair Repair

7th Floor South Wing

VRH (1 Supr, 1 Labr) provided supervision for lead abatement on select areas in Hut C. Operation also includes assistance with cleanup for patching repairs at Hut E.

Fine (2 Painters) continued lead abatement on wall locations between the 4th and 5th floors of Hut C. Operation includes removing peel away at locations where it has been applied already.

I certify that I have read the applicable paragraphs from the PA Construction Standards manual pertaining to the work/tests described above.

Shift 6:30 am - 3-15pm

Date 7/13/2010

Signed [signature] **Counter Signed**

Use form PA 316 to note labor, material or equipment usage

THE PORT AUTHORITY OF NY & NJ

DAILY NARRATIVE — PA 03-274-05

Contractor: VRH **Contract Number:** BT 200.200 WO # 12

Location: PABT - Emergency Stair Repair

7th Floor South Wing

VRH (1 Supr, 1 Labr) provided supervision for lead abatement on select areas at Hut C. Operation also included a cleanup at the end of the shift.

Fine (2 Painters) Operation continued work in Hut C applying peel away to select areas on the wall for abatement.

Grenadier (3 laborers) Installed waterproofing membrane at Hut E. Operation is in preparation for future asphalt placement on the 7th floor

I certify that I have read the applicable paragraphs from the PA Construction Standards manual pertaining to the work/tests described above.

Shift 6:30 am - 3-15pm

Date 7/12/2010

Signed [signature] **Counter Signed** [signature]

Use form PA 316 to note labor, material or equipment usage

THE PORT AUTHORITY OF NY & NJ

DAILY NARRATIVE — PA 0327-1-05

Contractor: VRH Contract Number: BT 200.200 WO #12

Location: PABT

Title: South Wing Emergency Stair Repair

VRH (1 Foreman, 1 Laborer)

General site clean up

Fine Painting (1 Foreman, 1 Journeyman)

Continued with lead abatement in Hut "C"

Grenadier Corp. (1 Foreman, 2 Laborers)

Chop and patch concrete atHut "E"

I certify that I have read the applicable paragraphs from the PA Construction Standards manual pertaining to the work/tests described above.

Shift 6:30 am - 3-15pm

Date 7/9/2010

Signed

Counter Signed

Use form PA 316 to note labor, material or equipment usage

THE PORT AUTHORITY OF NY & NJ

DAILY NARRATIVE — PA 1327/4-05

Contractor: VRH Contract Number: BT 200.200 WO #12

Location: PABT

Title: South Wing Emergency Stair Repair

VRH (1 Foreman, 1 Laborer)

General site clean up

Fine Painting (1 Foreman, 1 Journeyman)

Continued with lead abatement in Hut "C"

Grenadier Corp. (1 Foreman, 2 Laborers)

Pouring concrete at Huts "D" and "C"

I certify that I have read the applicable paragraphs from the PA Construction Standards manual pertaining to the work/tests described above.

Shift 6:30 am - 3-15pm

Date 7/8/2010

Signed

Counter Signed

Use form PA 316 to note labor, material or equipment usage

THE PORT AUTHORITY OF NY & NJ

DAILY NARRATIVE — PA 0327/4-05

Contractor: VRH **Contract Number:** BT 200.200 WO # 12

Location: PABT - Emergency Stair Repair

7th Floor South Wing

VRH (1 Supr, 1 Labr) provided supervision for lead abatement on select areas at Hut C. Operation also included a cleanup at the end of the shift.

Fine (2 Painters) finished lead abatement on select areas in Hut B. Operation moved to Hut C where peel away was applied on the entrance door handrail, and wall on the 7th floor.

I certify that I have read the applicable paragraphs from the PA Construction Standards manual pertaining to the work/tests described above.

Shift 6:30 am - 3-15pm

Date 7/7/2010

Signed [signature] **Counter Signed** [signature]

Use form PA 316 to note labor, material or equipment usage

THE PORT AUTHORITY OF NY & NJ

DAILY NARRATIVE

PA 0327/4-05

Contractor: VRH **Contract Number:** BT 200.200 WO # 12

Location: PABT - Emergency Stair Repair

7th Floor South Wing

VRH (1 Supr, 1 Labr) provided supervision for lead abatement on select areas in Hut B.

Fine (2 Painters) continued lead abatement on hand rails and wall framing at Hut B. Operation includes removing peel away around door frames between the 5th and 6th floor.

I certify that I have read the applicable paragraphs from the PA Construction Standards manual pertaining to the work/tests described above.

Shift 6:30 am - 3-15pm

Date 7/6/2010

Signed M Wells **Counter Signed** X

Use form PA 316 to note labor, material or equipment usage

THE PORT AUTHORITY OF NY & NJ

DAILY NARRATIVE — PA 0327/4-05

Contractor: VRH **Contract Number:** BT 200.200 WO # 12

Location: PABT - Emergency Stair Repair

7th Floor South Wing

VRH (1 Supr, 1 Labr) provided supervision for lead abatement on select areas on the 4th floor of Hut A. Operation also included a cleanup at the end of the shift.

Fine (2 Painters) finished lead abatement on select areas in Hut A. Operation moved to Hut 8 where peel away was applied on handrails between the 4th and 5th floor.

I certify that I have read the applicable paragraphs from the PA Construction Standards manual pertaining to the work/tests described above.

Shift 6:30 am - 3-15pm

Date 7/2/2010

Signed [signature] **Counter Signed** [signature]

Use form PA 316 to note labor, material or equipment usage

THE PORT AUTHORITY OF NY & NJ

DAILY NARRATIVE — PA 03274-05

Contractor: VRH **Contract Number:** BT 200.200 WO # 12

Location: PABT - Emergency Stair Repair

7th Floor South Wing

VRH (1 Supr, 1 Labr) provided supervision for lead abatement on select areas on the 4th floor of Hut A.

Fine (2 Painters) continued lead abatement on hand rails and wall framing at Hut A.

I certify that I have read the applicable paragraphs from the PA Construction Standards manual pertaining to the work/tests described above.

Shift 6:30 am - 3-15pm

Date 7/1/2010

Signed _____ **Counter Signed** _____

Use form PA 316 to note labor, material or equipment usage

THE PORT AUTHORITY OF NY & NJ

DAILY NARRATIVE — PA 032/7/4-05

Contractor: VRH **Contract Number:** BT 200.200 WO # 12

Location: PABT - Emergency Stair Repair

7th Floor South Wing

VRH (1 Supr, 1 Labr) provided supervision for lead abatement on select areas on the 4th floor of Hut A.

Grenadier (2 laborers) S.C. continued asphalt placement at Hut D. Operation also included saw cutting for future concrete spall repairs.

Fine (2 Painters) continued lead abatement on select areas in Hut A. Operation includes removing the peel away material applied the day prior.

I certify that I have read the applicable paragraphs from the PA Construction Standards manual pertaining to the work/tests described above.

Shift 6:30 am - 3-15pm

Date 6/30/2010

Signed M Wills **Counter Signed** X

Use form PA 316 to note labor, material or equipment usage

THE PORT AUTHORITY OF NY & NJ

DAILY NARRATIVE

PA 032-7405

Contractor: VRH **Contract Number:** BT 200.200 WO # 12

Location: PABT - Emergency Stair Repair

7th Floor South Wing

VRH (1 Supr, 1 Labr) provided supervision for lead abatement on select areas on the 4th floor of Hut A.

Grenadier (2 laborers) S.C. placed asphalt at the perimeter edge around Hut B. on the 7th floor of the South Wing.

Fine (1 Painter)S.C. performed lead abatement on hand rails and wall framing as per the documented report from PA Environmental. Operation includes removing the peel away material applied the day prior.

I certify that I have read the applicable paragraphs from the PA Construction Standards manual pertaining to the work/tests described above.

Shift 6:30 am - 3-15pm

Date 6/29/2010

Signed **Counter Signed**

Use form PA 316 to note labor, material or equipment usage

THE PORT AUTHORITY OF NY & NJ

DAILY NARRATIVE — PA 03274-05

Contractor: VRH **Contract Number:** BT 200.200 WO # 12

Location: PABT - Emergency Stair Repair

7th Floor South Wing

VRH (1 Supr, 1 Labr) provided supervision for lead abatement on select areas on the 4th floor of Hut A.

Fine (1 Painter)S.C. performed lead abatement on hand rails and wall framing as per the documented report from PA Environmental.

I certify that I have read the applicable paragraphs from the PA Construction Standards manual pertaining to the work/tests described above.

Shift 6:30 am - 3-15pm

Date 6/28/2010

Signed J. McWills **Counter Signed** X

Use form PA 316 to note labor, material or equipment usage

THE PORT AUTHORITY OF NY & NJ

DAILY NARRATIVE — PA 0327/4-05

Contractor: VRH **Contract Number:** BT 200.200 WO # 12

Location: PABT - Emergency Stair Repair

2nd Floor Hallway

VRH (1 Supr, 1 Labr) provided supervision for the installation of waterproofing material at Hut E. Operation was performed in order to alleviate concerns for future water leaks.

I certify that I have read the applicable paragraphs from the PA Construction Standards manual pertaining to the work/tests described above.

Shift 6:30 am - 3-15pm

Date 6/18/2010

Signed [signature] **Counter Signed** X

Use form PA 316 to note labor, material or equipment usage

THE PORT AUTHORITY OF NY & NJ

DAILY NARRATIVE — PA 0327-05

Contractor: VRH **Contract Number:** BT 200.200 WO # 12

Location: PABT - Emergency Stair Repair

2nd Floor Hallway

VRH (1 Supr, 1 Labr) provided supervision for electrical work in stairwell R on the second floor. Operation also included a general cleanup of the work area.

Total (2 Elec.) continued installation of wire through newly installed branch lines.

I certify that I have read the applicable paragraphs from the PA Construction Standards manual pertaining to the work/tests described above.

Shift 6:30 am - 3-15pm

Date 6/4/2010

Signed [signature] **Counter Signed** [signature]

Use form PA 316 to note labor, material or equipment usage

THE PORT AUTHORITY OF NY & NJ

DAILY NARRATIVE — PA 03274-05

Contractor: VRH **Contract Number:** BT 200.200 WO # 12

Location: PABT - Emergency Stair Repair

2nd Floor Hallway

VRH (1 Supr, 1 Labr) provided supervision for electrical work in stairwell R on the second floor. Operation also included a general cleanup of the work area.

Total (2 Elec.) finished pulling wire through newly installed branch lines. Operation also included fire stopping all location where penetrations were made.

I certify that I have read the applicable paragraphs from the PA Construction Standards manual pertaining to the work/tests described above.

Shift 6:30 am - 3-15pm

Date 6/7/2010

Signed [signature] **Counter Signed** X

Use form PA 316 to note labor, material or equipment usage

THE PORT AUTHORITY OF NY & NJ

DAILY NARRATIVE

PA 03274-05

Contractor: VRH **Contract Number:** BT 200.200 WO # 12

Location: PABT - Emergency Stair Repair

2nd Floor Hallway

VRH (1 Supr, 1 Labr) provided assistance and supervision with Total Electric coordinating work and keeping the work area clean.

Total (2 Elec.) started pulling wire for future camera installation in the staircase. Operation included 9 wires that will feed future CCTV cameras.

I certify that I have read the applicable paragraphs from the PA Construction Standards manual pertaining to the work/tests described above.

Shift 6:30 am - 3-15pm

Date 6/3/2010

Signed 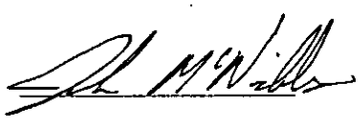 **Counter Signed** X

Use form PA 316 to note labor, material or equipment usage

THE PORT AUTHORITY OF NY & NJ

DAILY NARRATIVE

PA 03-7/4-05

Contractor: VRH **Contract Number:** BT 200.200 WO # 12

Location: PABT - Emergency Stair Repair

2nd Floor Hallway

VRH (1 Supr, 1 Labr) provided supervision for electrical work in stairwell R on the second floor. Operation also included a general cleanup of the work area.

Total (2 Elec.) continued installing electrical branch conduits for future CCTV camera installation in the south wing. Operation also includes prep work for future wire pulling.

I certify that I have read the applicable paragraphs from the PA Construction Standards manual pertaining to the work/tests described above.

Shift 6:30 am - 3-15pm

Date 6/2/2010

Signed John McNabb **Counter Signed**

Use form PA 316 to note labor, material or equipment usage