THE PORT AUTHORITY OF NY & NJ

Daniel D. Duffy
FOI Administrator

August 22, 2011

Mr. Ian Cairns
Steamship Line
One Meadowlands Plaza, Suite 201
East Rutherford, NJ 07073

Re: Freedom of Information Reference No. 12465

Dear Mr. Cairns:

This is a response to your July 19, 2011 request, which has been processed under the Port Authority's Freedom of Information Policy (the "Policy," copy enclosed) for a copy of Maher Terminal lease and the supplements.

Material responsive to your request and available under the Policy, which consists of 283 pages, will be forwarded to your attention upon receipt of a photocopying fee of $70.75 (25¢ per page). Payment should be made in cash, certified check, company check or money order payable to "The Port Authority of New York & New Jersey" and should be sent to my attention at 225 Park Avenue South, 17th Floor, New York, NY 10003.

Certain material responsive to your request is exempt from disclosure pursuant to exemption (6) of the Policy.

Please refer to the above FOI reference number in any future correspondence relating to your request.

Sincerely,

Daniel D. Duffy
FOI Administrator

Enclosure

225 Park Avenue South
17th Floor
New York, NY 10003
T: 212-435-3642 F: 212-435-7555

Torres Rojas, Genara FOI #12465

From: usa.icairns@cma-cgm.com
Sent: Tuesday, July 19, 2011 4:25 PM
To: Van Duyne, Sheree
Cc: Torres Rojas, Genara; Duffy, Daniel
Subject: Freedom of Information Online Request Form

Information:

First Name: Ian
Last Name: Cairns
Company: Shipping
Mailing Address 1: One Meadowlands Plaza
Mailing Address 2: Suite 201
City: East Rutherford
State: NJ
Zip Code: 07073
Email Address: usa.icairns@cma-cgm.com
Phone: 201-806-9516
Required copies of the records: Yes

List of specific record(s):
Copy of the Marine Terminal lease of Maher Terminals from Jan 2007 onwards plus all amendments.

AGREEMENT OF LEASE

EP-249

between

THE PORT AUTHORITY OF NEW YORK
AND NEW JERSEY

and

MAHER TERMINALS, INC.
(Lessee)

Dated as of October 1, 2000

CONFORMED COPY
Cmc

TABLE OF CONTENTS

Section 1. Letting 1

Section 2. Term 4

Section 3. Rental 4

Section 4. Container and Cargo Rental 6

Section 5. Funded Work Rental 11

Section 6. Rights of User 14

Section 7. Construction by Lessee 16

Section 8. Environmental Responsibilities 34

Section 9. **[There is no Section 9]** 46

Section 10. Ingress and Egress 46

Section 11. Governmental and Other Requirements 47

Section 12. Rules and Regulations 48

Section 13. Method of Operation 48

Section 14. Signs 51

Section 15. Indemnity and Liability Insurance 52

Section 16. Maintenance and Repair 54

Section 17. Casualty 62

Section 18. Assignment and Sublease 66

Section 19. Condemnation 67

Section 20. Other Construction by the Lessee 69

Section 21. Additional Rent and Charges 70

Section 22. Rights of Entry Reserved 71

Section 23. Limitation of Rights and Privileges Granted . . 72

Section 24. Prohibited Acts 73

Section 25. Termination 74

Section 26. Right of Re-entry 77
Section 27. Waiver of Redemption 77
Section 28. Survival of the Obligations of the Lessee . . . 77
Section 29. Reletting by the Port Authority 80
Section 30. Remedies to Be Nonexclusive 81
Section 31. Surrender 81
Section 32. Acceptance of Surrender of Lease 82
Section 33. Notices 82
Section 34. General 83
Section 35. Premises 87
Section 36. Force Majeure 89
Section 37. Brokerage 90
Section 38. Non-Liability of Individuals 90
Section 39. Services 90
Section 40. Security 92
Section 41. Approach Channel Depths 94
Section 42. Terminal Guarantee 95
Section 43. Records 98
Section 44. Affirmative Action 99
Section 45. Right of Termination - Ownership and Control . . 100
Section 46. Tax Election 107
Section 47. Late Charges 108
Section 48. First Point of Rest Space 109
Section 49. Entire Agreement 110

Schedule A
Schedule E
Schedule I

Exhibit A
Exhibit A-1
Exhibit A-2
Exhibit A-3
Exhibit A-4
Exhibit Y
Exhibit I

Lease No. EP-249

THIS AGREEMENT OF LEASE, made as of the First day of October, 2000 (hereinafter called the "Agreement"), by and between THE PORT AUTHORITY OF NEW YORK AND NEW JERSEY (hereinafter called "the Port Authority"), a body corporate and politic created by Compact between the States of New Jersey and New York, with the consent of the Congress of the United States of America, and having an office and place of business at One World Trade Center, New York, New York 10048; and MAHER TERMINALS, INC. (hereinafter called the "Lessee"), a corporation organized and existing under the laws of the State of New Jersey and having an office and place of business at One Journal Square Plaza, Jersey City, New Jersey 07306, whose representative is: M. Brian Maher.

WITNESSETH, THAT:

WHEREAS, the Lessee is currently the lessee and permittee of and the Port Authority is currently the lessor and grantor of certain premises at the Elizabeth-Port Authority Marine Terminal, in the City of Elizabeth, County of Union and State of New Jersey, pursuant to that certain Lease dated as of April 8, 1971 bearing Port Authority File Number EP-78, as amended (hereinafter called the "Lease EP-78"); that certain lease dated as of February 15, 1984 bearing Port Authority File Number EP-148, as amended (hereinafter called the "Lease EP-148"); and that certain permit dated as of January 24, 1992 bearing Port Authority File Number PEP-49, as amended (hereinafter called the "Permit PEP-49") (the Lease EP-78, the Lease EP-148 and the Permit PEP-49 are hereinafter collectively called the "Current Leases.") The premises which are the subject of the Current Leases and which are described in detail in the Current Leases, are herein referred to as the "Old Premises."

NOW, THEREFORE, for and in consideration of the covenants and agreements hereinafter contained, the Port Authority and the Lessee hereby covenant and agree as follows:

Section 1. Letting

The Port Authority hereby lets to the Lessee and the Lessee hereby hires and takes from the Port Authority, at the Elizabeth-Port Authority Marine Terminal (sometimes hereinafter called the "Facility" or the "marine terminal"), in the City of Elizabeth, in the County of Union and the State of New Jersey, the following:

(a) the open area and the enclosed spaces shown in stipple and diagonal cross hatching and the water area shown in diagonal hatching, all as so shown on a sketch hereto attached, hereby made a part hereof, and marked "Exhibit A", together with the buildings, structures, fixtures, improvements and other property, if any, of the Port Authority located or to be located or constructed therein or thereon, the said open area, enclosed spaces, and water area, buildings, structures, fixtures, improvements and other property of the Port Authority being hereinafter collectively called the "Initial Premises", and the water area shown in diagonal hatching being hereinafter sometimes called the "Berthing Area".

(b) the open area and the enclosed spaces shown in diagonal hatching and diagonal cross hatching, all as so shown on sketches hereto attached, hereby made a part hereof, and marked "Exhibit A-1", "Exhibit A-2" and "Exhibit A-3", together the buildings, structures, fixtures, improvements and other property, if any, of the Port Authority located or to be located or constructed therein or thereon, the said open area and enclosed spaces, buildings, structures, fixtures, improvements and other property of the Port Authority being hereinafter collectively called the "Added Premises". The parties agree that: (i) the Lessee shall not be responsible for the demolition of the warehouses and other structures currently on the Added Premises and (ii) the Added Premises shall be delivered to the Lessee in a straddle grade paved condition after completion of the Port Authority's construction program (including the removal of the rail tracks at the current ExpressRail) and shall become part of the premises under this Agreement in whole or in contiguous portions thereof effective upon ten (10) days' written notice given by the Port Authority to the Lessee setting forth a description of the location and configuration of the Added Premises or said portion thereof (any such notice being hereinafter called a "Tender Notice", the date any such Tender Notice is given being hereinafter called a "Tender Notice Date" and each date that the Added Premises or any portion thereof shall become a part of the premises under this Agreement being hereinafter called a "Tender Date").

(c) The Initial Premises and the Added Premises, upon its or their respective addition to the leasehold, shall hereinafter in this Agreement be collectively called and shall constitute the "Premises". The parties agree that the Premises constitute non-residential property.

(d) Notwithstanding the foregoing, the parties hereto acknowledge and agree, in order to reconfigure the Premises as shown on Exhibit A, Exhibit A-1, Exhibit A-2 and Exhibit A-3, that it will be necessary for the Lessee to surrender portions of the Old Premises (the "Partial Surrender") and to lease other

terminal space at the Facility. It is understood and agreed that in the event the Lessee fails to deliver the Partial Surrender in a timely manner, the Lessee shall be responsible to the Port Authority, shall hold the Port Authority harmless and shall make such payments as shall be necessary to compensate fully the Port Authority for all additional costs for delay of construction of the ExpressRail Facility (as hereinafter defined) and/or any damages or losses to the Port Authority arising out of that certain lease dated as of January 6, 2000 bearing Port Authority File Number EP-248 between the Port Authority and Maersk Container Service Company, Inc.

For Purposes of this Agreement, it is agreed that the order of Lessee's Partial Surrender shall be as follows:

(i) the first portion of the Old Premises to be Partially Surrendered by the Lessee will be that portion of the Old Premises which constitutes Buildings 4000 and 4040 and a 50 foot working area around each such portion which shall be Partially Surrendered by the date reasonably specified by the Port Authority.

(ii) the second portion of the Old Premises to be Partially Surrendered by the Lessee will be that portion of the Old Premises which constitutes approximately fifty (50) acres to be designated by the Port Authority in the Building 4000 area which shall be Partially Surrendered by the date reasonably specified by the Port Authority which is to be subsequent to the time the Lessee is provided those portions of the Added Premises known as the 1300 series area (which constitutes approximately eighteen (18) acres) and the 2200 series area (which constitutes approximately thirty-two (32) acres) improved in a manner consistent herewith.

(iii) the third portion of the Old Premises to be Partially Surrendered by the Lessee will be that portion of the Old Premises which constitutes approximately eight (8) acres, to be designated by the Port Authority in the Building 4000 area (excepting Building 4010 and permitting Building 4010 to remain active) which shall be Partially Surrendered by the date reasonably specified by the Port Authority, which is to be at the same time or subsequent to the Partial Surrender of the fifty (50) acres referenced in (ii) above.

(iv) the fourth portion of the Old Premises to be Partially Surrendered by the Lessee will be that portion of the Old Premises which constitutes Building 4010 and the remainder of the Old Premises which will not constitute part of the Premises (approximately ninety-six (96) acres) which shall be Partially Surrendered by the date reasonably specified by the Port Authority which is to be subsequent to the time the Lessee is

provided with the remainder of the Added Premises which is not then part of the Premises (principally the "old" Expressrail facility) improved in a manner consistent herewith.

(e) (i) The Lessee recognizes that the Port Authority contemplates development and construction of an intermodal rail facility on land comprised of areas adjacent to the Premises and areas presently comprising part of the Old Premises (hereinafter called the "ExpressRail Facility".) The Lessee hereby grants to the Port Authority, its employees, agents, representatives, contractors, subcontractors and designees the right to enter the Premises twenty-four (24) hours a day, seven (7) days a week for the purpose of performing the work on the ExpressRail Facility. The Lessee agrees that there shall be no reduction or abatement of any of the rentals payable hereunder on account of the work described in this paragraph, and that the performance thereof shall not constitute an eviction, or constructive eviction of the Lessee.

(ii) The Lessee shall have the right to cross the rail track which will service the ExpressRail Facility and adjacent space at such crossings so long as such crossings and the utilization thereof shall not unreasonably interfere with the safe and efficient operation of the ExpressRail Facility.

Section 2. Term

The term of the letting under this Agreement of the Initial Premises shall commence at 12:01 o'clock A.M. on October 1,2000 and, unless sooner terminated, shall expire at 11:59 o'clock P.M. on September 30, 2030. The term of the letting under this Agreement of the Added Premises or any portion thereof shall commence at 12:01 o'clock A.M. on the respective date set forth in the notice referred to in Section 1(b) hereof given by the Port Authority with respect to the Added Premises or any such portion thereof and, unless sooner terminated, shall expire at 11:59 o'clock P.M. on September 30, 2030.

Section 3. Rental

A. Basic Rental

(a) The Lessee shall pay a basic rental during the term of the letting for the Initial Premises at the annual rate of Thirteen Million Thirty-eight Thousand Dollars and No Cents ($13,038,000.00) payable in advance in equal monthly installments of One Million Eighty-six Thousand Five Hundred Dollars and No Cents ($1,086,500.00) on October 1, 2000 and on the first day of each calendar month thereafter occurring during the term of the letting. The Lessee shall pay a basic rental for the Added Premises at the annual rate Thirty-nine Thousand Seven Hundred

Fifty Dollars and No Cents ($39,750.00) subject to periodic adjustment as set forth in paragraph (b) of this Section 3 for each acre of the Added Premises, payable in advance in equal monthly installments of Three Thousand Three Hundred Twelve Dollars and Fifty Cents ($3,312.50) for each such acre on the date that such acre becomes part of the Premises and on the first day of each calendar month thereafter occurring through expiration of the term of the letting, except that if any of said Added Premises shall be less or more than one acre or an exact multiple thereof and/or shall be added on a day other than the first day of a calendar month, the aforesaid basic rental for said Added Premises shall be prorated to reflect the actual area of said Added Premises and/or the date of their addition to the leasehold. Effective on the date that all of the Added Premises have become part of the leasehold or, if such date is not the first day of a calendar month, the Lessee shall pay a combined basic rental for the Initial Premises and the Added Premises through the expiration of the term of the letting at the annual rate of Seventeen Million Six Hundred Eighty-eight Thousand Seven Hundred Fifty Dollars and No Cents ($17,688,750.00) subject to periodic adjustment as set forth in paragraph (b) of this Section 3, payable in advance in equal monthly installments of One Million Four Hundred Seventy-four Thousand Sixty-two Dollars and Fifty Cents ($1,474,062.50) on the first day of each calendar month occurring during such period.

(b) The basic rental set forth in paragraph (a) above shall be increased during the term of the letting by two percent (2%) per annum, compounded annually, commencing on the first anniversary of the date of the commencement of the term of the letting hereunder and on each anniversary date thereafter.

(c) The parties hereto acknowledge that as of the commencement of the term hereof and during the reconfiguration period the actual number of acres which constitute the space leased hereunder may not consist of four hundred forty-five (445) acres. Accordingly, in the event that at any time during the term hereof the actual number of acres which shall constitute the space leased hereunder shall be greater than or less than four hundred forty-five (445) acres, then during such time the basic rental set forth in paragraph (a) above, adjusted as provided in paragraph (b) above, (as well as any other item which is to be adjusted pursuant to this paragraph (c)) shall be increased or decreased proportionally based upon the ratio of the actual number of acres which constitute the space leased hereunder at that time to four hundred forty-five (445).

B. <u>Additional Rental</u>

The Lessee acknowledges and agrees that as of the commencement date of this Agreement the balance of the

unamortized capital investment under Lease 148 is Fourteen Million Three Hundred Forty-six Thousand Two Hundred Sixty-seven Dollars and Two Cents ($14,346,267.02) (hereinafter called the "Unamortized Amount"). In consideration of the making of this Agreement, the Lessee hereby agrees to pay to the Port Authority the full amount of the Unamortized Amount and the Port Authority has agreed to permit such payment to be made in one hundred thirty-five (135) consecutive monthly installments each in the amount of One Hundred Seventy-five Thousand Six Hundred Seven Dollars and Sixty-one Cents ($175,607.61) payable in advance on October 1, 2000 and on the first day of each and every calendar month thereafter through and including December 1, 2011. The payments described in this subparagraph shall be paid as additional rental by the Lessee to the Port Authority in the same manner and shall be collectible with like remedies as payment of all other rental under this Agreement, except that such payments shall not be subject to abatement, reduction or suspension for any reason whatsoever and the Lessee's obligations to make the payments described in this subparagraph shall be unaffected by any termination, revocation or expiration of the term of the letting under this Agreement. Upon any such termination, revocation or termination of the term of the letting hereunder, the entire unpaid balance of the Unamortized Amount shall immediately become due and payable by the Lessee to the Port Authority. Upon a default in the payment of any one of the installments described in this subparagraph, then at the election of the Port Authority, by notice to the Lessee, the entire unpaid balance of the Unamortized Amount shall thereupon become due and payable to the Port Authority, without set off, credit for advance payment or other adjustment, said unpaid balance being determined in accordance with the schedule attached hereto, hereby made a part hereof and marked "Schedule I", and further, failure of the Lessee to pay any installment described in this subparagraph, notwithstanding any such election by the Port Authority, shall constitute a default under Section 25(a)(10) of this Agreement. No acceptance by the Port Authority of any payment hereunder after the occurrence of any default in the payment of any installment described in this subparagraph shall be deemed a waiver of any right on the part of the Port Authority to accelerate the remaining unpaid balance of the Unamortized Amount.

Section 4. Container and Cargo Rental

(a) Except as specifically stated otherwise, for purposes of this Section and for all other purposes under this Agreement the following terms shall have the respective meanings provided below:

(1) "Lease Year" shall mean each twelve-month period commencing on January 1st and ending on December 31st to occur during the term of the letting under this Agreement;

(2) "Throughput Lease Year" shall mean as the context requires the period commencing on October 1, 2008 (which date is hereinafter called the "Throughput Lease Year Commencement Date") and ending on September 30, 2009 and each Lease Year thereafter occurring during the term of the letting under this Agreement;

(3) "Qualified Containers" shall mean cargo containers loaded onto or discharged from vessels berthing at the Premises (whether or not stuffed or stripped at the Premises, whether or not so loaded or discharged by means of container cranes, and whether or not empty or containing cargo), including without limitation any specialized cargo containers such as flat-racks (flat-racks when empty and bundled together as one unit shall be counted as one container), and shall also be deemed to include automobiles loaded or discharged from vessels berthing at the Premises with six (6) automobiles being equal to one (1) cargo container; but shall not mean containers arriving on shipboard and departing on the same ship and the same voyage if such containers are merely unloaded from the ship at the Premises and reloaded in the course of a restowing operation or are merely moved from one location to another location on the same ship in the course of a shifting operation. Containers discharged from vessels berthing at the Premises and loaded onto vessels berthing at the Premises in the course of a transshipment operation shall be deemed to have been both discharged from such vessels and loaded onto such vessels in one discrete operation (i.e., only counted one time) for purposes of the computation of the number of Qualified Containers;

(4) "Non-container Cargo" shall mean bulk cargo not in cargo containers loaded onto or discharged from vessels berthing at the Premises;

(5) "Revenue Ton" shall mean one long ton (a weight of 2,240 pounds) or a measurement ton (40 cubic feet) as determined by the Port Authority acting in its sole discretion;

(6) "Exemption Number" shall mean the sum of three hundred fifty-six thousand (356,000);

Whenever reference is made to the Exemption Number, it shall mean the Exemption Number adjusted by operation of the proration provisions of Section 3(c) hereof.

(7) "Tier 1 Number of Containers" shall mean, for each Throughput Lease Year, the number of Qualified Containers

from three hundred fifty-six thousand and one (356,001) Qualified Containers through nine hundred eighty thousand (980,000) Qualified Containers;

(8) "Tier 2 Number of Containers" shall mean, for each Throughput Lease Year, the number of Qualified Containers above nine hundred eighty thousand (980,000) Qualified Containers;

(b) The Lessee shall pay to the Port Authority a container throughput rental (hereinafter called the "Container Throughput Rental") for each Throughput Lease Year from the Throughput Lease Year Commencement Date through the expiration of the term of the letting under this Agreement equal to the product obtained by multiplying (1) the tier 1 throughput rental rate (hereinafter called the "Tier 1 Rental Rate") applicable for the Throughput Lease Year by the Tier 1 Number of Containers loaded onto or discharged from vessels berthing at the Premises during such Throughput Lease Year; and (2) the tier 2 throughput rental rate (hereinafter called the "Tier 2 Rental Rate") applicable for the Throughput Lease Year by the Tier 2 Number of Containers loaded onto or discharged from vessels berthing at the Premises during such Throughput Lease Year. The Tier 1 Rental Rates and the Tier 2 Rental Rates for each Throughput Lease Year are as set forth in the Schedule attached hereto, hereby made a part hereof and marked "Schedule A".

(c) The computation of the Container Throughput Rental for each Throughput Lease Year, or a portion of a Throughput Lease Year, shall be individual to such Throughput Lease Year, or such portion of a Throughput Lease Year, and without relation to any other Throughput Lease Year, or any other portion of any Throughput Lease Year. The time for making payment of the Container Throughput Rental, and the method of calculation thereof, shall be as set forth in paragraph (d) of this Section. The Container Throughput Rental shall be payable on a monthly basis, as set forth in paragraph (d) of this Section, based on the number of Qualified Containers loaded onto or discharged from vessels berthing at the Premises during the month.

(d) The Lessee shall pay the Container Throughput Rental as follows:

On the 30th day of the first month following the month in which the Throughput Lease Year Commencement Date shall occur, and on the 30th day of each and every month thereafter occurring during the Throughput Lease Year in which the Throughput Lease Year Commencement Date shall occur and each subsequent Throughput Lease Year occurring during the term of the letting, including the month following the end of each such Throughput Lease Year, the Lessee shall render to the Port

Authority a statement certified by a responsible officer of the Lessee showing the total number of Qualified Containers loaded onto or discharged from vessels berthing at the Premises during the preceding month and the cumulative number of Qualified Containers loaded onto or discharged from vessels berthing at the Premises from the date of the commencement of the Throughput Lease Year for which the report is made through the last day of the preceding month; each monthly statement shall be accompanied by monthly vessel activity reports to substantiate the statement, showing the total number of Qualified Containers loaded onto or discharged from vessels berthing at the Premises during the month for which the report is made.

During the period, if any, subsequent to the Throughput Lease Year Commencement Date and prior to the Terminal Lease Year Commencement Date, as defined in Section 42(a)(2) hereof, whenever any monthly statement shall show that the cumulative number of Qualified Containers loaded onto or discharged from vessels berthing at the Premises during the Throughput Lease Year for which the report is made is in excess of the Exemption Number, the Lessee shall pay to the Port Authority at the time of rendering such statement and at the time of rendering each subsequent monthly statement for such Throughput Lease Year, and the month following such Throughput Lease Year, an amount equal to the product obtained by multiplying the Tier 1 Rental Rate by the Tier 1 Number of Containers, as the case may be, loaded onto or discharged from vessels berthing at the Premises during the month for which such report is made and the product obtained by multiplying the Tier 2 Rental Rate by the Tier 2 Number of Containers, as the case may be, loaded onto or discharged from vessels berthing at the Premises during the month for which such report is made.

From and after the Terminal Lease Year Commencement Date, whenever any monthly statement shall show that the cumulative number of Qualified Containers loaded onto or discharged from vessels berthing at the Premises during the Throughput Lease Year for which the report is made is in excess of, respectively, six hundred fifty thousand (650,000) but less than nine hundred eighty thousand (980,000) during the First Terminal Guarantee Period, as defined in Section 42(a)(5) hereof, seven hundred seventy-five thousand (775,000) but less than nine hundred eighty thousand (980,000) during the Second Terminal Guarantee Period, as defined in Section 42(a)(6) hereof, the Lessee shall pay to the Port Authority at the time of rendering such statement and at the time of rendering each subsequent monthly statement for such Throughput Lease Year, and the month following such Throughput Lease Year, an amount equal to the product obtained by multiplying the Tier 1 Rental Rate by the number of Qualified Containers in excess of, respectively, six hundred fifty thousand (650,000) during the First Terminal

Guarantee Period, and seven hundred seventy-five thousand (775,000) during the Second Terminal Guarantee Period, as the case may be, loaded onto or discharged from vessels berthing at the Premises during the month for which such report is made and the product obtained by multiplying the Tier 2 Rental Rate by the Tier 2 Number of Containers, as the case may be, loaded onto or discharged from vessels berthing at the Premises during the month for which such report is made.

(e) Upon any termination of the letting hereunder (even if stated to have the same effect as expiration), the number of Qualified Containers shall be reported and the Container Throughput Rental shall be paid on the 30th day of the first month following the month in which the effective date of such termination occurs, as follows: the Lessee shall render to the Port Authority a statement certified by a responsible officer of the Lessee showing the total number of Qualified Containers loaded onto or discharged from vessels berthing at the Premises during the Throughput Lease Year in which the effective date of termination falls; the payment then due on account of all Container Throughput Rental for the Throughput Lease Year in which the effective date of termination falls shall be the excess of the Container Throughput Rental for such Throughput Lease Year, computed as follows, over the total of all Container Throughput Rental payments previously made by the Lessee for such Throughput Lease Year: an amount equal to the product obtained by multiplying (1) the Tier 1 Rental Rate by the Tier 1 Number of Containers, as the case may be, loaded onto or discharged from vessels berthing at the Premises during such Throughput Lease Year, and (2) the Tier 2 Rental Rate by the Tier 2 Number of Containers, as the case may be, loaded onto or discharged from vessels berthing at the Premises during such Throughput Lease Year, with the Exemption Number, the Tier 1 Number of Containers, and the Tier 2 Number of Containers all being multiplied by a fraction, the numerator of which shall be the number of days from the commencement of such Throughput Lease Year to the effective date of termination and the denominator of which shall be 365. Any amount of the Container Throughput Rental determined to be owed to the Port Authority pursuant to such calculation shall be paid by the Lessee at the time of rendering the statement.

(f) In the event that the Lessee shall at any time by the provisions of Section 3.A(c) or any other provision of this Agreement become entitled to an abatement of basic rental, then the Exemption Number, the Tier 1 Number of Containers, and the Tier 2 Number of Containers shall be reduced proportionately to the reduction of the basic rental.

(g) The Lessee shall pay to the Port Authority a non-container cargo throughput rental (hereinafter called the "Non-container Throughput Rental") with respect to Non-container Cargo

for each Lease Year to occur during the term of the letting under this Agreement equal to the product obtained by multiplying the total number of Revenue Tons of Non-container Cargo loaded onto or discharged from vessels berthing at the Premises during the Lease Year by the respective wharfage charge for such cargo set forth in the Port Authority tariff for Port Authority Marine Terminals published in FMC Schedule PA-10 (or any successor tariff) as such charges may be amended from time to time during the term of the letting. The Non-container Throughput Rental shall be payable on a monthly basis, as set forth in paragraph (h) of this Section, based on the number of Revenue Tons of Non-container Cargo loaded onto or discharged from vessels berthing at the Premises during the month.

(h) The Lessee shall pay the Non-container Throughput Rental as follows: on the 30th day of the month next following the first month of the first Lease Year, and on the 30th day of each (or the 28th day if a February and the 29th day of February if a leap year) and every month thereafter occurring during such first Lease Year and each subsequent Lease Year occurring during the term of the letting, including the month following the end of each such Lease Year, the Lessee shall render to the Port Authority a statement certified by a responsible officer of the Lessee showing the total number of Revenue Tons of Non-container Cargo loaded onto or discharged from vessels berthing at the Premises during the preceding month and the cumulative number of Revenue Tons of Non-container Cargo loaded onto or discharged from vessels berthing at the Premises from the commencement of the Lease Year for which the report is made through the last day of the preceding month; each monthly statement shall be accompanied by monthly vessel activity reports to substantiate the statement, showing the total number of Revenue Tons of Non-container Cargo loaded onto or discharged from vessels berthing at the Premises during the month for which the report is made. The Lessee shall pay any amount of Non-container Throughput Rental due under this Section at the time of rendering said report.

(i) Except as set forth in paragraph (f) of this Section, the rentals payable under this Section shall not be subject to abatement or suspension or reduction for any reason whatsoever.

Section 5. Funded Work Rental

(a) For all purposes of this Agreement, the following terms shall have the respective meanings provided below.

(1) "Annual Construction Period" shall mean, as the context requires, the period commencing on October 1, 2000 and ending on December 31, 2000, and each of the twelve-month

periods thereafter occurring during the period from January 1, 2001 through December 31, 2020.

(2) "Facility Rental Payment Period" shall mean for the Annual Facility Rental due on account of the payments made by the Port Authority to the Lessee during each Annual Construction Period on account of the cost of the Funded Work, as defined in Section 7(a)(3) hereof, the period from the day next following the end of that Annual Construction Period through September 30, 2030.

(3) "The Port Authority's Costs of the Funded Work" shall mean for each Annual Construction Period 103.5% of all payments made by the Port Authority to the Lessee during such Annual Construction Period on account of the cost of the Funded Work performed by the Lessee.

(4) "Y" shall mean, as the context requires, the number (with the decimal carried to seven places) obtained by dividing the sum of (i) the average of the weekly Index of 25 Revenue Bonds as reported in the publication "The Bond Buyer" for the one hundred eighty (180) day period immediately preceding the expiration of each Annual Construction Period and (ii) one hundred seventy-five (175) basis points, by the whole number twelve (12). The calculation of Y with respect to Facility Construction Rental and Annual Facility Rental payable on account of the payments made by the Port Authority during any Annual Construction Period on account of the cost of the Funded Work shall be individual to the Facility Construction Rental and Annual Facility Rental payable on account of such payments and without relation to any other rental or any other payments. For purposes of example and illustration only, the Index of 25 Revenue Bonds for the week ending November 22, 1995 was 5.89% as set forth in the table entitled "Bond Buyer Indexes" on page 32 of The Bond Buyer, Vol. 314, No. 29784, New York, N.Y. dated Monday, November 27, 1995. In the event that The Bond Buyer or its weekly Index of 25 Revenue Bonds shall be discontinued at any time during the term of the letting a comparable substitute for such Index shall be mutually agreed upon in writing by the Lessee and the Port Authority within thirty (30) days after discontinuance. In the event that the Port Authority and the Lessee shall fail to agree upon such a substitute within the time hereinabove specified then upon notice of either party such dispute shall be disposed of by arbitration in accordance with the then existing rules of the American Arbitration Association or any successor association. One half of the cost of said arbitration shall be borne by the Port Authority and the other half of said cost shall be borne by the Lessee.

(5) "Monthly Rental Factor" shall mean, as the context requires, the factor or factors derived in accordance

herewith from time to time by the application of the following formula:

$$\frac{1}{\frac{1}{Y} - \frac{1}{Y(1+Y)^t}} = \text{Monthly Rental Factor}$$

Where t (a power) equals the number of calendar months (expressed in whole numbers) in any given Facility Rental Payment Period that shall occur during the term of the letting hereunder.

(b) In addition to all other rentals payable by the Lessee under this Agreement, the Lessee shall pay to the Port Authority a rental (hereinafter called "the Facility Construction Rental") equal to the result of (i) multiplying Y for each Annual Construction Period and the product obtained by multiplying the amount of each payment made by the Port Authority to the Lessee during that Annual Construction Period on account of the cost of the Funded Work by the number of days from the date of such payment to the expiration date of that Annual Construction Period and (ii) dividing the result of that calculation by 30. The Facility Construction Rental shall be payable as set forth in paragraph (c) of this Section.

(c) In addition to all other rentals payable by the Lessee under this Agreement, the Lessee shall pay to the Port Authority a rental on account of the payments made by the Port Authority to the Lessee during each Annual Construction Period on account of the cost of the Funded Work (hereinafter called the "Annual Facility Rental") at a monthly rate equal to the product obtained by multiplying the Monthly Rental Factor calculated in connection with the Facility Rental Payment Period for such Annual Facility Rental by the sum of (i) the amount of the Facility Construction Rental payable by the Lessee pursuant to paragraph (b) of this Section for that Annual Construction Period and (ii) the Port Authority's Costs of the Funded Work as hereinbefore defined for that Annual Construction Period, which rental shall be payable during the Facility Rental Payment Period in advance on the first day thereof and on the first day of each calendar month thereafter during such period. The rental payable pursuant to this paragraph (c) shall not be subject to abatement or suspension or reduction for any reason whatsoever.

(d) Notwithstanding the foregoing provisions of this Section, at any time after the one hundred twentieth (120th) monthly payment of payments due pursuant to this Section 5 with respect to any specific construction project of the Funded Work,

the Lessee shall have the right to pay, in whole or in part, to the Port Authority on the first day of a calendar month the unamortized portion of the Port Authority's Costs or a portion of the unamortized portion of the Port Authority's Costs with respect to such specific construction project (hereinafter called a "Prepayment Amount") as follows:

(i) The Lessee shall pay to the Port Authority at the time of and together with any Prepayment Amount a prepayment fee of three percent (3%) of the Prepayment Amount being prepaid during the period from the one hundred twenty-first (121st) through the one hundred ninety-second (192nd) monthly payment of payments due pursuant to this Section 5.

(ii) The Lessee shall pay to the Port Authority at the time of and together with any Prepayment Amount a prepayment fee of two percent (2%) of the Prepayment Amount being prepaid during the period from the one hundred ninety-third (193rd) through the two hundred sixty-fourth (264th) monthly payment of payments due pursuant to this Section 5.

(iii) The Lessee shall pay to the Port Authority at the time of and together with any Prepayment Amount a prepayment fee of one percent (1%) of the Prepayment Amount being prepaid during the period from the two hundred sixty-fifth (265th) through the last monthly payment of payments due during the term pursuant to this Section 5.

In the event of such a prepayment, the payments due to this Section 5 shall, with respect to such specific construction project, cease as of the date of such prepayment if such unamortized costs are paid in full, or if only a portion of such unamortized cost is paid, then such payments shall be recalculated, prospectively, as if only the unpaid portion of such costs constituted the full amount of the Port Authority's costs with respect to such specific construction project. For purposes of this paragraph (d), the unamortized portion of the costs of any specific construction project, shall be the present value (calculated in accordance with the generally recognized principles of financial analysis) of all the remaining monthly payments attributable to such specific construction project determined pursuant to Section 5 discounted, at the same monthly rate as was utilized when such payments were determined (such rate being referred to as "Y" in Section 5).

Section 6. <u>Rights of User</u>

(a) The Lessee shall use the Premises for the following purposes only, and for no other purpose whatsoever: (i) the loading and unloading predominately of cargo housed in containers, and also of non-containerized cargo, such bulk cargo

as shall have the prior and continuing written consent of the Port Authority, and ships' stores, supplies and gear on or from seagoing vessels and other craft permitted to be berthed in the Berthing Area; (ii) the receipt, handling, and storage incidental to the transportation of cargo (whether or not in cargo containers) transported or to be transported by seagoing vessels permitted to be berthed in the Berthing Area, and of ships' stores, supplies and gear for such vessels; (iii) the parking of motor vehicles and of trailers and semi-trailers owned or operated by the Lessee or by the employees of the Lessee or by persons doing business with it at the Facility for the purposes set forth in this Section; (iv) the storage and repair of cargo containers, chassis, other cargo-handling equipment, and necessary amounts of dunnage used in the operations of the Lessee under this Agreement; (v) for the operation of a cafeteria or cafeterias for the over-the-counter sales to officers and employees of the Lessee and their families and to business guests of such officers and employees, of food, beverages and other merchandise normally sold in such an establishment at no profit to the Lessee and either directly by the Lessee or by an independent contractor(s) of the Lessee who has/have received a permit or permits from the Port Authority so to do; provided, however, in the event the operation of such cafeteria(s) violates health regulations and upon notice of termination of such operation from the Port Authority, the Lessee or the independent contractor(s), as the case may be, shall immediately cease such operation as specified in said notice; and (vi) such office space (with related automobile parking) incidental to and necessary for the foregoing operations of the Lessee.

(b) The Lessee shall have the right to berth in the Berthing Area seagoing vessels for which the Lessee acts as stevedore or terminal operator, and operated by persons, firms or corporations which shall have the prior and continuing consent of the Port Authority, to be granted, withheld, and withdrawn in the sole discretion of the Port Authority, carrying or about to carry general cargo, and tugboats, barges, lighters and other harbor craft serving such seagoing vessels, for loading or discharge of cargo, ships' stores, supplies and gear. Such loading and discharge from seagoing vessels may be accomplished in the Berthing Area through the medium of barges, lighters, and other harbor craft moored inshore or offshore. The Lessee shall have the exclusive right to collect dockage and wharf usage charges from seagoing vessels and all other craft, subject to all the terms and provisions of this Agreement. The Lessee shall not use or permit the use of the Berthing Area except as hereinabove provided.

Section 7. Construction by Lessee

(a)(1) The Lessee understands that construction and installation work is required with respect to its occupancy of and operations on the Premises, and the Lessee agrees to and shall perform the following items of work with respect to the Premises: (i) the structural strengthening of the foundation of four thousand five hundred (4,500) linear feet of crane rail (which needs not be contiguous) and construction of new 100 foot gauge crane rail, (ii) reinforcement of the berth to allow for dredging of three thousand three hundred (3,300) linear feet (which needs not be contiguous) of the Berthing Area to fifty (50) feet below mean low water, (iii) dredging of three thousand three hundred (3,300) linear feet (which needs not be contiguous) of the Berthing Area to forty-five (45) feet below mean low water (hereinafter in this Agreement called the "Forty-five Foot Dredging"), (iv) the upgrade of the container yard, including the resurfacing of approximately one hundred forty-five (145) acres of the Premises, transtainer runs, ancillary yard support, and reefer outlets, (v) dredging of three thousand three hundred (3,300) linear feet (which needs not be contiguous) of the Berthing Area to fifty (50) feet below mean low water (hereinafter in this Agreement called the "Fifty Foot Dredging"),(vi) the upgrade of the container yard, including the resurfacing of approximately one hundred ninety (190) acres of the Premises that were not included in item (iv).

Items (i) through (iv) shall hereinafter be collectively called the "Class A Work", and items (v) and (vi) shall hereinafter be collectively called the "Class B Work".

Subject to the Lessee's obtaining the Port Authority's approval thereof as provided in paragraph (c) of this Section, in addition to the Class A Work and the Class B Work the Lessee may perform the following items of work on the Premises: (i) the structural strengthening of the foundation of three thousand five hundred ten (3,510) linear feet of crane rail (which needs not be contiguous) and construction of new 100-foot gauge crane rail, (ii) installation of seven hundred fifty (750) linear feet of new crane rail foundation and crane rail (which needs not be contiguous), (iii) relocation of the gate complex system and the upgrade of the electric services, (iv) the upgrade of the electrical infrastructure and power distribution system, (v) the construction of a maintenance and repair building, an administration building, (vi) the upgrade of the gate complex, (vii) the demolition of buildings, (viii) the purchase and installation of container cranes for use at the Premises to be owned by the Port Authority, and (ix) any other construction projects to be approved in advance by the Port Authority at its sole discretion and done at the marine terminal. Items (i) through (ix) shall hereinafter be collectively called the "Class

C Work." The Class A Work, the Class B Work and the Class C Work shall hereinafter be collectively called the "Lessee's Construction Work".

(2) The Port Authority shall reimburse the Lessee the amount of up to the first Forty-six Million Dollars and No Cents ($46,000,000.00) (hereinafter called the "Construction Work Reimbursement Amount") on account of the performance by the Lessee of the Lessee's Construction Work (the "Reimbursed Work") prior to the expiration of the a five-year period commencing on October 1, 2000. However, the Construction Work Reimbursement Amount shall not be used for the purchase and installation of container cranes. The Lessee shall provide the Port Authority with written notice describing the work to be subject to said reimbursement prior to the performance thereof. The Construction Work Reimbursement Amount shall be applied solely to work performed in accordance with the provisions of this Section. The Port Authority shall provide the Lessee with the Construction Work Reimbursement Amount subject to and in accordance with the provisions of paragraph (q) of this Section; provided, however, that the Construction Work Reimbursement Amount shall be applied solely to the reimbursement of costs incurred as determined by the provisions of paragraph (p) of this Section.

(3) The Port Authority shall also reimburse the Lessee on account of the performance by the Lessee of the balance of the Lessee's Construction Work (the "Funded Work"). The Lessee shall provide the Port Authority with written notice describing the work to be subject to such funding prior to the performance thereof. Funding under this subparagraph shall be in the form of the reimbursement solely of the cost of work performed in accordance with the provisions of this Section (which amount of reimbursement is hereinafter called the "Funded Work Reimbursement Amount"). The Port Authority shall provide the Lessee with the Funded Work Reimbursement Amount subject to and in accordance with the provisions of paragraph (p) of this Section; provided, however, that the Funded Work Reimbursement Amount shall be applied solely to the reimbursement of costs incurred as determined by the provisions of paragraph (o) of this Section. The Lessee shall pay the Facility Construction Rental and Facility Rental set forth in Section 5 of this Agreement with respect to the Funded Work Reimbursement Amount. Notwithstanding any other provision of this Agreement, the Funded Work Reimbursement Amount shall in no event exceed Two Hundred Four Million Dollars and No Cents ($204,000,000.00).

(4) The Lessee agrees that it will complete the construction projects of the Class A Work within one year of the date of the completion of the Forty-five Foot Deepening (as defined in Section 41(a) hereof), and that it will complete the construction projects of the Class B Work within one year of the

date of the completion of the Fifty Foot Deepening (as defined in Section 41(b) hereof). The Port Authority shall not be obligated to provide any portion of the Construction Work Reimbursement Amount or the Funded Work Reimbursement Amount for any portion of the Class A Work which has been constructed or installed subsequent to one year of the date of the completion of the Forty-five Foot Deepening. The Port Authority shall not be obligated to provide any portion of the Construction Work Reimbursement Amount or the Funded Work Reimbursement Amount for any portion of the Class B Work which has been constructed or installed subsequent to one year of the date of the completion of the Fifty Foot Deepening. In addition, the Port Authority shall not be obligated to provide any portion of the Construction Work Reimbursement Amount or the Funded Work Reimbursement Amount for any infrastructure construction projects of the Class A Work, the Class B Work or the Class C Work after December 31, 2020.

(5) Notwithstanding any other provision of this Agreement, if work on the Fifty Foot Deepening has not commenced by December 31, 2009, the Lessee shall not be required to perform the Class B Work (whether or not the Lessee has then commenced any part of the Class B Work) unless and until work has commenced on the Fifty Foot Deepening, in which case the Class B Work shall be performed by the Lessee and completed within one year of the date of completion of the Fifty Foot Deepening.

(6) The Port Authority has entered into a Project Cooperation Agreement with the United States Department of Army for the construction of the Kill Van Kull and Newark Bay Channels, New York and New Jersey, dated as of January 13, 1999 (hereinafter, as the same has been or may hereinafter be amended or supplemented, called the "Cooperation Agreement"). In the event that the Port Authority shall enter into a subsequent agreement regarding any additional construction of the Kill Van Kull and Newark Bay Channels of a similar nature to the Cooperation Agreement, the provisions of this paragraph shall apply with respect to said subsequent agreement and the Lessee's obligations hereunder as if it were the Cooperation Agreement. In connection with the Cooperation Agreement, the Port Authority (i) has undertaken or may in the future undertake certain obligations respecting the operation and maintenance of the "local service facilities" in a manner compatible with the authorized purposes of the "Project" (as such quoted terms are defined in the Cooperation Agreement); and (ii) has authorized the "Government" to enter upon property that the Port Authority now or hereafter owns or controls for access to the "general navigation features" (as such quoted terms are defined in the Cooperation Agreement) for the purpose of inspection and, if necessary, for the purpose of operating and maintaining the general navigation features. The performance by the Lessee of the Forty-five Foot Dredging and Fifty Foot Dredging as required

in this paragraph is therefore a special consideration and inducement to the making of this Agreement by the Port Authority, and the Lessee further covenants and agrees that if the United States Corps of Engineers or any other governmental office or body having jurisdiction over the enforcement of the obligations of the Port Authority in connection with the Cooperation Agreement shall make orders, recommendations or suggestions respecting the performance of dredging of any portion or portions of the berthing area in addition to the Forty-five Foot Dredging and the Fifty Foot Dredging, the Lessee will promptly comply therewith at its sole cost and expense, at the time or times, when and to the extent that the Port Authority may direct.

(b) With respect to the Lessee's Construction Work while the Port Authority recognizes that the Lessee is neither an insurance company nor authorized to actually insure the risk of the Port Authority, the Lessee agrees that it shall, in effect, act as the insurer of the Port Authority, and its Commissioners, officers, agents and employees against the following distinct and several risks, whether they arise from acts or omissions of the Lessee, any contractors of the Lessee, the Port Authority, third persons, or from acts of God or the public enemy, or otherwise, excepting only risks which result solely from affirmative willful acts done by the Port Authority subsequent to commencement of the work:

(i) The risk of loss or damage to all such construction prior to the completion thereof. In the event of such loss or damage, the Lessee shall forthwith repair, replace and make good the work without cost to the Port Authority;

(ii) The risk of death, injury or damage, direct or consequential, to the Port Authority, and its Commissioners, officers, agents and employees, and to its or their property, arising out of or in connection with the performance of the Lessee's Construction Work. The Lessee shall indemnify the Port Authority, and its Commissioners, officers, agents and employees, for all such injuries and damages, and for all loss suffered by reason thereof;

(iii) The risk of claims and demands, just or unjust, by third persons against the Port Authority, and its Commissioners, officers, agents and employees, arising or alleged to arise out of the performance of the Lessee's Construction Work. The Lessee shall indemnify the Port Authority, and its Commissioners, officers, agents and employees, against and from all such claims and demands, and for all loss and expense incurred by it and by them in the defense, settlement

or satisfaction thereof including without limitation thereto, claims and demands for death, for personal injury or for property damage, direct or consequential.

(c) Each discreet portion of the Lessee's Construction Work proposed by the Lessee and approved by the Port Authority shall be herein called a "specific construction project". Prior to the commencement of any specific construction project of the Lessee's Construction Work, the Lessee shall submit to the Port Authority for its approval a Construction Application or Construction Applications in the form supplied by the Port Authority, and containing such terms and conditions as the Port Authority may include, setting forth in detail by appropriate plans and specifications the work the Lessee proposes to perform and the manner of and time periods for performing the same, including without limitation a schedule listing each contract proposed to be entered into for the performance of such work and the estimated cost of the work to be performed under each such contract. The data to be supplied by the Lessee shall identify separately each of the specific construction projects constituting the Class A Work, Class B Work and Class C Work and shall describe in detail the systems, improvements, fixtures and equipment to be installed by the Lessee. The Lessee shall be responsible at its sole expense for retaining all architectural, engineering and other technical consultants and services as may be directed by the Port Authority and for developing, completing and submitting detailed plans and specifications for such work. The plans and specifications to be submitted by the Lessee shall be in sufficient detail for a contractor to perform the work and shall bear the seal of a qualified architect or professional engineer of the State of New Jersey who shall be responsible for the administration of the work in accordance with the Port Authority's requirements. In connection with review by the Port Authority of the Lessee's submissions under this Section, the Lessee shall submit to the Port Authority, at the Port Authority's request, such additional data, detail or information as the Port Authority may find necessary. Following the Port Authority's receipt of the Lessee's Construction Application and complete plans and specifications, the Port Authority shall give its written approval or rejection thereof, or shall request such revisions or modifications thereto as the Port Authority may find necessary. The Lessee shall not engage any contractor or permit the use of any subcontractor unless and until each such contractor or subcontractor, and the contract such contractor is operating under, have been approved by the Port Authority. The Lessee shall include in any such contract or subcontract such provisions as are required in accordance with the provisions of this Agreement and the Construction Application approved by the Port Authority. The Lessee shall obtain and maintain or cause each contractor to obtain and maintain in force such insurance coverage as is described in paragraphs (j) and (k) of this

Section and such performance bonds as the Port Authority may specify. All specific construction projects of the Lessee's Construction Work shall be performed by the Lessee in accordance with the Construction Applications and final plans and specifications approved by the Port Authority, shall be subject to inspection by the Port Authority during the progress of the work and after the completion thereof, and the Lessee shall redo or replace at its own expense any work not done in accordance therewith. Upon final completion of all of the Lessee's Construction Work pertaining to each specific construction project the Lessee shall deliver to the Port Authority a certificate to such effect signed by a responsible officer of the Lessee and by the architect or engineer who sealed the Lessee's plans pursuant to the provisions of this paragraph certifying that all of such work has been performed in accordance with the approved plans and specifications and the provisions of this Agreement, and upon completion thereof the Lessee shall supply the Port Authority with two (2) sets of as-built drawings of each specific construction project of the Lessee's Construction Work in such form as the Port Authority shall determine. The Lessee shall keep said drawings current during the term of the letting under this Agreement. No changes or modifications to any specific construction project shall be made without prior Port Authority consent. Following its receipt of the Lessee's certificate, the Port Authority shall inspect the Lessee's Construction Work pertaining to the specific construction project and, unless such certification is not correct, or the Port Authority determines that the Premises is unsuitable for occupancy and use by the Lessee, a certificate of final completion with respect to the specific construction project (hereinafter called the "Certificate of Completion") shall be delivered to the Lessee by the Port Authority, subject to the condition that all risks thereafter with respect to the construction and installation of the same and any liability therefor for negligence or other reason shall be borne by the Lessee. The Lessee shall not use or permit the use of the specific construction project or any portion thereof for the purposes set forth in this Agreement until such certificate is received from the Port Authority and the Lessee shall not use or permit the use of the specific construction project or any portion thereof even if such certificate is received if the Port Authority states in any such certificate that the same cannot be used until certain other specified portions of the Lessee's Construction Work are completed.

(d) Except as set forth in paragraph (e) of this Section, the Lessee shall not commence any portion of any specific construction project until the Construction Application and plans and specifications covering such specific construction project, referred to in paragraph (c) of this Section, have been finally approved by the Port Authority.

(e) If the Lessee desires to commence construction of a portion or portions of a specific construction project prior to the approval by the Port Authority of the complete Construction Application and plans and specifications for such specific construction project pursuant to paragraph (c) of this Section, the Lessee shall submit to the Port Authority a separate Construction Application for each portion of such specific construction project the Lessee so desires to commence (each such portion of such specific construction project being hereinafter designated as "Partial Approval Work") which shall be executed by an authorized officer of the Lessee and shall be accompanied by final and complete plans, specifications, drawings, and data with respect to such portion of the specific construction project (the final and complete plans, specifications, drawings, and data covering each such portion of each specific construction project are hereinafter referred to as "the Partial Approval Work Plans" with respect to such portion of such specific construction project) setting forth in detail the work to be performed in connection with each such portion of the specific construction project. The Port Authority shall have full and complete discretion as to whether to permit the Lessee to proceed with the performance of any Partial Approval Work. If the Port Authority consents to the performance of any Partial Approval Work, the Port Authority shall review the Construction Application covering such work and shall give its written approval or rejection of the Partial Approval Work Plans with respect thereto or shall request such revisions or modifications thereto as the Port Authority may find necessary. Upon the Port Authority's approval of the Construction Application with respect to a Partial Approval Work and its approval of the Partial Approval Work Plans with respect thereto, the Lessee may proceed to perform such Partial Approval Work subject to and in accordance with the following terms and conditions:

(1) The performance by the Lessee of a Partial Approval Work in accordance with the Port Authority's approval will be at its sole risk and if for any reason the plans and specifications for the balance of such specific construction project are not approved by the Port Authority or if the approval thereof calls for modifications or changes in any Partial Approval Work pertaining to the specific construction project undertaken by the Lessee under any approval granted by the Port Authority pursuant to this paragraph, the Lessee will, as directed by the Port Authority, and at the Lessee's sole cost and expense, either restore the area affected to the condition existing prior to the commencement of such Partial Approval Work or make such modifications and changes to such work as may be required by the Port Authority.

(2) Nothing contained in any approval given pursuant to this paragraph shall constitute a determination or indication

by the Port Authority that the Lessee has complied with any laws, rules, orders, ordinances, enactments, resolutions, regulations, statutes, requirements, codes, directions, and executive orders, including but not limited to those of the City of Elizabeth, which may pertain to the Partial Approval Work to be performed and which the Lessee is required to comply with pursuant to this Agreement.

(3) Each Partial Approval Work shall be performed in accordance with and subject to the terms and provisions of this Agreement covering the specific construction project and in accordance with the approved Construction Application covering such Partial Approval Work and in accordance with the approved Partial Approval Work Plans constituting a part of such Construction Application, and subject to any requirements, stipulations, and provisions which the Port Authority may impose in its approval of the performance of such Partial Approval Work.

(4) No Partial Approval Work performed by the Lessee pursuant to the provisions of this paragraph shall affect or limit the obligations of the Lessee under any prior approvals it may have obtained with respect to each specific construction project.

(5) The fact that the Lessee has performed a Partial Approval Work and that the Port Authority has consented to the performance thereof shall not affect or limit the obligations of the Lessee under this Agreement with respect to each specific construction project. The Lessee specifically understands that neither the Port Authority's approval of any Construction Application and Partial Approval Work Plans covering a Partial Approval Work nor the performance by the Lessee of such Partial Approval Work pursuant to such approval shall obligate the Port Authority to approve the Construction Application and plans and specifications submitted by the Lessee for the balance of the specific construction project or shall create or be deemed to create any obligation on the part of the Port Authority to permit subsequent Partial Approval Work to be performed. Without limiting the generality of the provisions of this paragraph, it is specifically understood that the Port Authority may withhold its approval of a Construction Application and Partial Approval Work Plans if the Port Authority determines that review of subsequent items of Partial Approval Work is required before the Port Authority can approve, reject, or comment upon such Partial Approval Work Plans.

(6) In the event that in the opinion of the Port Authority the Lessee at any time during the performance of a Partial Approval Work under the approval granted by the Port Authority pursuant to this paragraph shall fail to comply with all of the provisions of this Agreement with respect to such work

or shall fail to comply with the provisions of the Construction Application covering such work and the plans and specifications forming a part thereof, or shall fail to comply with any requirements, stipulations, or provisions imposed by the Port Authority in its approval of the performance of such Partial Approval Work, or if in the Port Authority's opinion the Lessee shall be in breach of any of the provisions of this Agreement covering such work or shall be in breach of any of the provisions of the Construction Application and plans and specifications covering the performance of such work, or shall be in breach of any requirements, stipulations, or provisions imposed by the Port Authority in its approval of the work, the Port Authority shall have the right to cause the Lessee to cease all or such part of such Partial Approval Work as is being performed in violation of this Agreement, the Construction Application and plans and specifications, or the conditions of the Port Authority's approval. Upon written direction from the Port Authority, the Lessee shall promptly cease performance of the Partial Approval Work specified. The Lessee shall thereupon submit to the Port Authority for its written approval the Lessee's proposal for making modifications, corrections or changes in or to Partial Approval Work that has been or is to be performed so that the same will comply with the provisions of this Agreement, the Construction Application and plans and specifications, or the conditions of the Port Authority's approval covering such work. The Lessee shall not commence construction of the Partial Approval Work that has been halted until it has received written approval of the proposed modifications, corrections or changes.

(7) It is hereby expressly understood and agreed that the Port Authority has no duty or obligation of any kind whatsoever to inspect or police the performance of a Partial Approval Work by the Lessee and the rights granted to the Port Authority hereunder shall not create or be deemed to create such a duty or obligation. Accordingly, the fact that the Port Authority has not exercised its right to require the Lessee to cease performance of all or any part of the Partial Approval Work shall not be or be deemed to be an agreement or acknowledgment on the part of the Port Authority that the Lessee has in fact performed such work in accordance with the terms of this Agreement, the Construction Application and plans and specifications covering such work, or the conditions of the Port Authority's approval of such work, nor shall such fact be or be deemed to be a waiver by the Port Authority of any of the requirements of this Agreement with respect to such work, or any of the requirements of the Construction Application and plans and specifications covering such work, or any of the conditions of the Port Authority's approval of such work.

(f) Without limiting the generality of any of the provisions of this Agreement, any specific construction project

of the Lessee's Construction Work (including any Partial Approval Work performed by the Lessee) shall be performed in such a manner that there will be at all times during construction a minimum of air pollution, water pollution or any other type of pollution, and a minimum of noise emanating from, arising out of, or resulting from construction. Subject to the provisions of this Agreement, the Lessee shall construct such reasonable structures, fences, equipment, devices and other facilities as may be necessary or appropriate to accomplish the objectives set forth in this paragraph, and, without limiting the generality of the foregoing, such construction shall be subject to the Port Authority's review and approval in accordance with the provisions of this Section.

(g) Without limiting the generality of paragraph (c) of this Section the Lessee shall be solely responsible for the plans and specifications used by it and for the adequacy or sufficiency of such plans, specifications and all the improvements, fixtures, and equipment depicted thereon or covered thereby, regardless of the consent thereto or approval thereof by the Port Authority or the incorporation therein of any Port Authority requirements or recommendations. The Port Authority shall have no obligation or liability in connection with the performance of any specific construction project of the Lessee's Construction Work or for the contracts for the performance thereof entered into by the Lessee. Any warranties extended or available to the Lessee in connection with any specific construction project of the Lessee's Construction Work shall be for the benefit of the Port Authority as well as the Lessee. The Lessee shall conduct no public operations in the Premises with respect to any improvements, fixtures or equipment constituting a specific construction project of the Lessee's Construction Work or a portion thereof until the Port Authority shall have notified the Lessee in writing that the specific construction project of Lessee's Construction Work or such portion thereof has been completed or substantially completed to its satisfaction. In the event of any inconsistency between the provisions of this Agreement and those of the Construction Application(s) referred to in paragraph (c) of this Section the provisions of this Agreement shall control.

(h) The Lessee shall pay all claims lawfully made against it by its contractors, subcontractors, materialmen and workmen, and all claims lawfully made against it by other third persons arising out of or in connection with or because of the performance of any specific construction project of the Lessee's Construction Work, and shall cause its contractors and subcontractors to pay all such claims lawfully made against them. Nothing herein contained shall be deemed to constitute consent to the creation of any lien or claim against the Premises or any part thereof, nor to prevent the Lessee from contesting claims in

good faith. No contractor or third party shall or shall be deemed to have acquired any rights against the Port Authority by virtue of the execution of this Agreement and nothing contained herein shall operate or give to any such contractor or third party any claim or right of action against the Port Authority and its Commissioners, officers, agents and employees.

(i) In addition to all policies of insurance otherwise required by this Agreement, the Lessee shall procure and maintain or cause to be procured and maintained in effect during the performance of each of the specific construction projects of the Lessee's Construction Work:

(i) Commercial General Liability Insurance including but not limited to coverage for Products Liability-Completed Operations and for Broad Form Property Damage and Independent Contractor coverage, with a contractual liability endorsement covering the obligations assumed by the Lessee under paragraph (b) of this Section, which coverage shall not exclude claims arising out of or in connection with work performed within fifty feet of railroad property, and which are customarily insured under such a policy, with a minimum combined single limit coverage for bodily injury and property damage of $25 million. Said insurance shall also include coverage for explosion, collapse and underground property damage hazards.

(ii) Protection and Indemnity Insurance, if the Lessee's work involves the ownership, maintenance, operation, use, loading or unloading of watercraft, with a minimum combined single limit coverage for bodily injury and property damage of $25 million.

(iii) Commercial Automobile Liability Insurance covering all owned, non-owned or hired vehicles used in connection with said construction with a minimum combined single limit coverage for bodily injury and property damage of $2 million.

(iv) Environmental Liability Insurance, with a minimum combined single limit coverage for bodily injury and property damage for both gradual and sudden occurrences of $5 million.

(v) Workers' Compensation and Employers' Liability Insurance in accordance with the requirements of law. The Workers' Compensation Policy shall be specially endorsed to include coverage afforded by (aa) the U.S. Longshoremen's and Harbor Workers' Compensation Act and Coverage B - "Jones Act, maritime (including coverage for

Masters or Members of the Crew of Vessels) and (bb) Coverage - B under the Federal Employers' Liability Act.

(j) In addition to the insurance required pursuant to the provisions of paragraph (i) of this Section, the Lessee shall procure or cause to be procured prior to the commencement of each specific construction project of the Lessee's Construction Work Builder's Risk Insurance (All Risk) covering loss or damage (including any loss or damage resulting from flood or earthquake) to any structures, improvements, fixtures and equipment and furnishing and materials on the Premises during said construction, whether or not attached to the land, in an amount equal to the full replacement cost. Such insurance shall name the Port Authority as an insured and such policy shall provide that the loss shall be adjusted with the Port Authority, and that the proceeds thereof shall be paid to the Port Authority and shall be made available to the Lessee for and applied strictly and solely to the payment of the cost of the repair, replacement, rebuilding or other performance of such specific construction project of the Lessee's Construction Work.

(k) With the exception of the Workers' Compensation and Employers' Liability Insurance policy each policy of insurance described in paragraph (i) of this Section shall include the Port Authority as an additional insured (including, without limitation, for purposes of Premises operations and completed-operation), and no such policy shall contain any care, custody or control exclusions, or any exclusion for bodily injury to or sickness, disease or death of any employee of the Lessee or of any of its contractors which would conflict with or in any way impair the coverages resulting from the Port Authority's status as an additional insured or the coverage under the contractual liability endorsement described in subdivision (i) of paragraph (i) of this Section. Such insurance shall also contain an endorsement providing that the protection afforded the Lessee thereunder with respect to any claim or action against the Lessee by a third party shall pertain and apply with like effect with respect to any claim or action against the Lessee by the Port Authority and against the Port Authority by the Lessee, but said endorsement shall not limit, vary, change or affect the protections afforded the Port Authority as an additional insured. Such insurance shall contain a provision that the insurer shall not, without obtaining express advance permission from the General Counsel of the Port Authority, raise any defense involving in any way the jurisdiction of the tribunal over the person of the Port Authority, the immunity of the Port Authority, its Commissioners, officers, agents or employees, the governmental nature of the Port Authority or the provisions of any statutes respecting suits against the Port Authority.

(l) Unless otherwise set forth herein, each policy of insurance described in paragraphs (i) and (j) of this Section shall be subject to the applicable provisions of Section 15(e) of this Agreement.

(m) Title to and property in all improvements and fixtures placed, constructed or installed in or on the Premises, including all such improvements and fixtures as shall constitute the Lessee's Construction Work, shall vest in the Port Authority upon placement, construction or installation thereof provided, however, that title to and property in any and all equipment and trade fixtures removable without substantial injury to the Premises placed in or installed upon the Premises, the cost of which has not been reimbursed by the Port Authority to the Lessee as part of the Construction Work Reimbursement Amount or the Funded Work Reimbursement Amount, shall vest in the Lessee upon the installation thereof. No equipment or trade fixtures title to which is vested in the Port Authority shall be removed from the Premises by the Lessee. Without limiting any other term of this Agreement, and notwithstanding the foregoing provisions, upon notice given by the Port Authority either prior to or within sixty (60) days after expiration or earlier termination of the letting of the Premises under this Agreement the Lessee shall remove from the Premises any improvements, fixtures, trade fixtures, or equipment as the Port Authority may specify in its notice, and shall repair any damage to the Premises caused by such removal.

(n) In the performance of each specific construction project of the Lessee's Construction Work the Lessee shall not permit any situation or condition to continue that may cause or be conducive to any labor troubles at the Facility which interferes with the progress of other operations or construction work at the Facility. The determinations of the Port Authority shall be conclusive on the Lessee and, upon notice from the Port Authority, the Lessee shall or shall cause its contractor to immediately rectify any condition specified in the notice. In the event of failure by the Lessee or any of its contractors to immediately comply with the requirements of this paragraph (whether or not such failure is due to the Lessee's fault) the Port Authority by notice shall have the right to suspend the Port Authority's permission to the Lessee to proceed with each portion of each specific construction project of the Lessee's Construction Work being performed by or on behalf of the Lessee, and the Lessee shall thereupon immediately cease the same. When labor troubles shall be so settled that such interference or the danger thereof no longer exists, the Port Authority by notice to the Lessee shall reinstate the permission to the Lessee to perform the subject specific construction project of the Lessee's Construction Work on all the same terms and conditions as before the suspension. "Labor troubles" shall mean and include strikes,

boycotts, picketing, work-stoppages, slowdowns, complaints, disputes, controversies or any other type of labor trouble, regardless of the employer of the person involved or their employment status, if any.

(o) To the extent permitted by sound accounting practice, the sum of the following items of cost incurred by the Lessee in performing the Reimbursed Work and/or the Funded Work shall constitute the reasonable cost thereof for the purposes of this Agreement:

(1) The Lessee's payments to contractors;

(2) The Lessee's payments for supplies and materials;

(3) The Lessee's payments to persons, firms or corporations other than construction contractors or suppliers of materials, for services rendered or rights granted in connection with construction, not including services of the types mentioned in items (4), (5) and (6) of this paragraph;

(4) The Lessee's payments of premiums for performance bonds and for the insurance the Lessee and its subcontractors is required to maintain in effect in accordance with the provisions of paragraphs (i) and (j) of this Section or which is commercially reasonable to maintain during the period of construction only;

(5) The Lessee's payments for engineering services in connection with the Reimbursed Work and/or the Funded Work, and during the period of the construction only;

(6) The Lessee's payments for architectural, planning and design services in connection with the Reimbursed Work and/or the Funded Work;

(7) The sum of the costs approved under items (4), (5) and (6) of this paragraph shall not exceed 20% of the sum of the combined costs approved under items (1), (2) and (3) of this paragraph; if in fact there is any such excess, such excess shall not be a part of the cost incurred by the Lessee in the performance of the Reimbursed Work and/or the Funded Work for the purposes of this Section.

No payment or payments on account of administrative or other overhead costs and no payment to employees of the Lessee shall be included in the cost of the Reimbursed Work and/or the Funded Work whether or not allocated to the cost of the work by the Lessee's own accounting practices. No payment to a firm or

corporation wholly or partially owned by or in common ownership with the Lessee shall be included in the cost of the Reimbursed Work and/or the Funded Work.

(p) On or about the tenth day of the first calendar month following the commencement of each specific construction project of the Lessee's Construction Work and on the tenth day of each calendar month thereafter, the Lessee shall certify to the Port Authority by written certification subscribed by a responsible officer of the Lessee as follows:

(i) the amount of the Lessee's Construction Work performed by the Lessee in the preceding month showing separately the amount of work performed under each specific construction project for Class A Work, Class B Work, Class C Work, Reimbursed Work, and Funded Work respectively during such month; the cost of the work under each specific construction project described in the certificate; the amount paid by the Lessee on account of such cost during such month, if any; and the cumulative amount of the cost of each such project incurred by the Lessee on account of such work described in the certificate from the commencement of such work;

(ii) that except for the amount, if any, stated in such certificate to be due for services and materials, there is no outstanding indebtedness known to the persons signing such certificate, after due inquiry, then due on account of the purchase of any equipment or fixtures described in the certificate or for labor, wages, materials, supplies or services in connection with any work described therein which, if unpaid, might become the basis of a vendor's, mechanic's, laborer's or materialmen statutory or similar lien or alleged lien upon any such work or upon the Premises or any part thereof, or upon the Lessee's leasehold interest therein, nor are any of the equipment, or fixtures described in such certificate secured by any liens, mortgages, security interests or other encumbrances. Nothing contained herein shall be deemed or construed as a submission by the Port Authority to the application to itself of any such lien; and

(iii) that all of the work for which the amount set forth in the certificate is due has been performed in accordance with the Lessee's approved plans and specifications and the provisions of this Agreement.

Such certificate shall also contain a certification by the Lessee and by the architect or engineer who sealed the Lessee's plans pursuant to the provisions of paragraph (c) of this Section certifying that all of the work described in the certificate has been performed in accordance with the final plans

and specifications approved by the Port Authority covering such specific construction project.

Following its receipt of the Lessee's certificate, the Port Authority shall remit to the Lessee an amount equal to the cost paid by the Lessee for the portion of the specific construction project constituting Reimbursed Work and/or Funded Work performed by the Lessee in the preceding month described in the certificate less ten percent (10%) thereof and also less the amount of any claims made against the Port Authority by subcontractors, materialmen or workmen, if any, in connection with any of the work described in the certificate.

Upon final completion of each specific construction project of the Lessee's Construction Work to be performed by the Lessee as set forth in the Lessee's approved plans and specifications with respect to such specific construction project and the issuance by the Port Authority of a Certificate of Completion with respect to such specific construction project as prescribed in paragraph (c) of Section 7 hereof, the Lessee shall certify to the Port Authority with respect to such specific construction project the final cost of such work for such specific construction project, the respective cumulative payments made by the Lessee on account of such respective costs stating separately the payments on account of Reimbursed Work and/or Funded Work and shall also certify the items set forth above in subdivisions (ii) and (iii) of this paragraph with respect to all of the work pertaining to such specific construction project. In addition, the architect or engineer who sealed the Lessee's plans and specifications with respect to such specific construction project pursuant to the provisions of paragraph (c) of this Section shall certify that all of the work has been performed in accordance with the final plans and specifications approved by the Port Authority covering such work.

After examination and approval of such certificates, and such supporting documents and records as the Port Authority shall deem necessary to substantiate the certificates, the Port Authority will pay to the Lessee an amount equivalent to the difference between the sum obtained by adding together all prior payments made to the Lessee under the provisions of this paragraph by the Port Authority on account of the cost of the specific construction project constituting Reimbursed Work and/or Funded Work and the lesser of (i) the reasonable cost, as defined in paragraph (o) of this Section, of the specific construction project constituting Reimbursed Work and/or Funded Work, or (ii) the Construction Work Reimbursement Amount (as to the Reimbursed Work) and/or the Funded Work Reimbursement Amount (as to the Funded Work).

If the sum of all of the previous payments made by the Port Authority to the Lessee on account of the cost of the Lessee's Construction Work with respect to a specific construction project constituting Reimbursed Work and/or Funded Work exceeds the lesser of (i) the reasonable cost, as defined in paragraph (o) of this Section, of the Lessee's Construction Work constituting Reimbursed Work and/or Funded Work or (ii) the Construction Work Reimbursement Amount (as to the Reimbursed Work) and/or the Funded Work Reimbursement Amount (as to the Funded Work), the Lessee shall pay to the Port Authority the amount of such excess on demand. No payment made by the Port Authority to the Lessee pursuant to the provisions of this paragraph, including, without limitation, any payment made to the Lessee following the Port Authority's receipt of the Lessee's final certification of cost, shall be deemed final until the cost of the specific construction project has been finally determined by the Port Authority. Any payment made to the Lessee following the Port Authority's receipt of the Lessee's final certification of cost shall not be deemed a final determination of the cost of the specific construction project. Such final determination shall occur only after the Port Authority has examined and approved the Lessee's final certificate of cost and such records and other documentation of the Lessee as the Port Authority shall deem necessary to substantiate such cost.

The Lessee shall permit the Port Authority by its agents, employees and representatives at all reasonable times prior to a final determination of the cost of each specific construction project to examine and audit the records and other documentation of the Lessee which pertain to and will substantiate such cost.

In no event whatsoever shall the cost of a specific construction project as finally determined and computed in accordance with the provisions of paragraph (o) of this Section and in accordance with the provisions of this paragraph include any expenses, outlays or charges whatsoever by or for the account of the Lessee for or in connection with any improvements, equipment or fixtures or the performance of any work unless such are actually and completely installed in and or made to the Premises nor shall cost include the costs of any equipment, fixture or improvements which are secured by liens, mortgages, other encumbrances or conditional bills of sale.

(q) The Port Authority's entire obligation under this Agreement to make payments to the Lessee on account of the cost of the Reimbursed Work shall be limited in amount to the Construction Work Reimbursement Amount. The Port Authority's entire obligation under this Agreement to make payments to the Lessee on account of the cost of the Funded Work shall be limited in amount to the Funded Work Reimbursement Amount. No contractor

or third party shall or shall be deemed to have acquired any rights against the Port Authority by virtue of the execution of this Agreement and nothing contained herein shall operate or give to any such contractor or third party any claim or right of action against the Port Authority and its Commissioners, officers, agents and employees.

(r) Without limiting any of the terms and conditions hereof, the Lessee understands and agrees that it shall put into effect prior to the commencement of any specific construction project of the Lessee's Construction Work an affirmative action program and Minority Business Enterprise (MBE) program and Women-owned Business Enterprise (WBE) program in accordance with the provisions of Schedule E, attached hereto and hereby made a part hereof. The provisions of Schedule E shall be applicable to the Lessee's contractor or contractors and subcontractors at any tier of construction as well as to the Lessee, and the Lessee agrees to include the provisions of Schedule E in all of its construction contracts so as to make the provisions and undertakings set forth in Schedule E the direct obligation of the construction contractor or contractors and subcontractors at any tier of construction. The Lessee agrees to and shall require its contractors and subcontractors to furnish to the Port Authority such data, including but not limited to compliance reports, relating to the operation and implementation of the affirmative action, MBE, and WBE programs of the Lessee and its contractor, contractors, and subcontractors at any tier of construction called for under the provisions of this paragraph and Schedule E annexed hereto as the Port Authority may request at any time and from time to time and the Lessee agrees to and shall also require that its contractors and subcontractors at any tier of construction make and put into effect such modifications and additions thereto as may be directed by the Port Authority pursuant to the provisions of this paragraph and Schedule E annexed hereto to effectuate the goals of affirmative action, MBE, and WBE programs. The obligations imposed on the Lessee under this paragraph and Schedule E annexed hereto shall not be construed to impose any greater requirements on the Lessee than those which may be imposed on the Lessee under applicable law.

(s) In addition to and without limiting any terms and provisions hereof, the Lessee shall provide in all of its contracts and subcontracts covering the Lessee's Construction Work, or any portion thereof, that:

(1) The contractor shall not discriminate against employees or applicants for employment because of race, creed, color, national origin, sex, age, disability or marital status, and shall undertake or continue existing programs of affirmative action to ensure that minority group persons are afforded equal employment opportunity without discrimination. Such programs

shall include, but not be limited to, recruitment, employment, job assignment, promotion, upgrading, demotion, transfer, layoff, termination, rates of pay or other forms of compensation, and selections for training or retraining, including apprenticeships and on-the-job training;

(2) At the request of either the Port Authority or the Lessee, the contractor shall request such employment agency, labor union, or authorized representative of workers with which it has a collective bargaining or other agreement or understanding and which is involved in the performance of the contract with the Lessee to furnish a written statement that such employment agency, labor union or representative shall not discriminate because of race, creed, color, national origin, sex, age, disability or marital status and that such union or representative will cooperate in the implementation of the contractor's obligations hereunder;

(3) The contractor will state, in all solicitations or advertisements for employees placed by or on behalf of the contractor in the performance of the contract, that all qualified applicants will be afforded equal employment opportunity without discrimination because of race, creed, color, national origin, sex, age, disability or marital status;

(4) The contractor will include the provisions of subdivisions (1) through (3) of this paragraph in every subcontract or purchase order in such a manner that such provisions will be binding upon each subcontractor or vendor as to its work in connection with the contract;

(5) "Contractor" as used in paragraph (t) and in this paragraph shall include each contractor and subcontractor at any tier of construction.

Section 8. <u>Environmental Responsibilities</u>

(a) For purposes of this Agreement, the following terms shall have the respective meanings provided below:

(1) "Analyzed Item" shall mean in the singular and "Analyzed Items" shall mean in the plural all of the pollutants for which the samples set forth in Exhibit I were tested.

(2) "Bay Avenue Premises" shall mean that portion of the Premises shown in crosshatching on Exhibit A.

(3) "Environmental Damages" shall mean any one or more of the following: (i) the presence in, on, or under the Premises of any Hazardous Substance whether

such presence occurred prior to or during the term of the letting under this Agreement or resulted from any act or omission of the Lessee or others, and/or (ii) the disposal, discharge, release or threatened release of any Hazardous Substance from the Premises or of any Hazardous Substance from under the Premises and/or (iii) the presence of any Hazardous Substance in, on or under other property at the Facility as a result of (a) the Lessee's use and occupancy of the Premises or the performance of the Lessee's Construction Work or (b) a migration of a Hazardous Substance from the Premises or from under the Premises or (c) the Lessee's operations at the Facility, and/or (iv) any personal injury, including wrongful death, or property damage, arising out of or related to any Hazardous Substance described in (i), (ii) or (iii) above, and/or (v) the violation of any Environmental Requirement pertaining to any Hazardous Substance described in (i), (ii) or (iii) above, the Premises and/or the activities thereon.

(4) "Environmental Requirements" shall mean in the plural and "Environmental Requirement" shall mean in the singular all common law and all past, present and future laws, statutes, enactments, resolutions, regulations, rules, directives, ordinances, codes, licenses, permits, orders, memoranda of understanding and memoranda of agreement, guidances, approvals, plans, authorizations, concessions, franchises, requirements and similar items of all governmental agencies, departments, commissions, boards, bureaus or instrumentalities of the United States, states and political subdivisions thereof, all pollution prevention programs, "best management practices plans", and other voluntary programs adopted and agreements made by the Port Authority with any governmental agencies, departments, commissions, boards, bureaus or instrumentalities of the United States, states and political subdivisions thereof, and all judicial, administrative, voluntary and regulatory decrees, judgments, orders and agreements relating to the protection of human health or the environment, the foregoing to include without limitation:

(i) All requirements pertaining to reporting, licensing, permitting, investigation and remediation of emissions, discharges, releases or threatened releases of Hazardous Substances into the air, surface water, groundwater or land, or relating to the manufacture, processing, distribution, use, treatment, storage, disposal, transport or handling of Hazardous Substances, or

the transfer of property on which Hazardous Substances exist; and

(ii) All requirements pertaining to the protection of the health and safety of employees or the public with respect to or in connection with Hazardous Substances.

(5) "Exhibit I" shall mean the exhibit attached hereto, hereby made a part hereof and marked "Exhibit I" entitled "Environmental Baseline Field Program Bay Avenue Terminal Elizabeth Port Authority Marine Terminal" dated January 2000 and containing four volumes.

(6) "Existing Condition" shall mean the Initial Existing Condition as superseded and supplemented in accordance with this Section by each Succeeding Existing Condition.

(7) "Governmental Authority" and "Governmental Authorities" shall mean all governmental agencies, authorities, departments, commissions, boards, bureaus or instrumentalities of the United States, states and political subdivisions thereof, except that it shall not be construed to include The Port Authority of New York and New Jersey, the lessor under this Agreement.

(8) "Hazardous Substances" shall mean and include in the plural and "Hazardous Substance" shall mean and include in the singular any pollutant, contaminant, toxic or hazardous waste, dangerous substance, potentially dangerous substance, noxious substance, toxic substance, flammable, explosive or radioactive material, urea formaldehyde foam insulation, asbestos, polychlorinated biphenyls ("PCBs"), chemicals known to cause cancer, endocrine disruption or reproductive toxicity, petroleum and petroleum products and other substances which have been or in the future shall be declared to be hazardous or toxic, or the removal, containment or restriction of which have been or in the future shall be required, or the manufacture, preparation, production, generation, use, maintenance, treatment, storage, transfer, handling or ownership of which have been or in the future shall be restricted, prohibited, regulated or penalized by any federal, state, county, or municipal or other local statute or law now or at any time hereafter in effect as amended or supplemented and by the regulations adopted and publications promulgated pursuant thereto.

(9) "Initial Existing Condition" shall mean the report and test results in Exhibit I setting forth the levels of the Analyzed Items in the soil and upper aquifer of the Bay Avenue Premises as applied by the methodology set forth in paragraph (j) below for the establishment of the level of the Analyzed Items for all portions of the Bay Avenue Premises.

(10) "Migrated Hazardous Substances" shall mean Hazardous Substances in, on or under the Premises which have migrated from outside the Premises, or from outside the groundwater under the Premises and which Hazardous Substances where not disposed of, discharged or released by or as a result of the acts or omissions of the Lessee.

(11) "Succeeding Existing Condition" shall mean upon the delivery of a report and test results described in paragraph (m) hereof, if any, the results of such report and test results setting forth the levels of the Analyzed Items in the soil and upper aquifer of the Bay Avenue Premises together with those portions of Exhibit I which have not been superseded, as applied by the methodology set forth in paragraph (j) below for the establishment of the level of the Analyzed Items for all portions of the Bay Avenue Premises, provided, however, and notwithstanding the foregoing, in no event shall the level of any Analyzed Item in any Succeeding Existing Condition be above the lower of (i) the level for such Analyzed Item as set forth in the Initial Existing Condition, or (ii) the lowest level of such Analyzed Item as shown in any test report or test result delivered to the Lessee pursuant to paragraph (m) hereof.

(b) (1) Without limiting the generality of any of the other terms and provisions of this Agreement and subject to the terms and provisions of paragraph (b)(2) below, the Lessee hereby expressly agrees to assume all responsibility for and relieve the Port Authority from and reimburse the Port Authority for any and all risks, claims, penalties, costs and expenses of any kind whatsoever relating to, caused by, arising out of or in connection with the conditions of the Premises whether any such conditions existed prior to, on or after the effective date of the letting of the Premises to the Lessee hereunder, including without limitation, all Environmental Damages and all Environmental Requirements which the Lessee is obligated to comply with pursuant to this Agreement.

(2) It is hereby agreed and understood that except as set forth in paragraphs (k), (q) and (r) of this

Section 8 the Lessee shall not be responsible for the remediation or removal of (x) the Existing Condition on the Bay Avenue Premises or (y) for Migrated Hazardous Substances.

(c) Without limiting the Lessee's obligations elsewhere under this Agreement to comply with all laws, ordinances, governmental rules, regulations and orders which or at any time are in effect during the term of the letting under this Agreement, the Lessee understands and agrees that except with respect to remediation and removal of the Existing Condition on the Bay Avenue Premises and Migrated Hazardous Substances which the Lessee is not responsible for pursuant to paragraph (b)(2) of this Section 8, it shall be obligated, at its cost and expense, to comply with and relieve the Port Authority from compliance with all Environmental Requirements which are applicable to or which affect (i) the Premises, (ii) the operations of the Lessee or others with the consent of the Lessee at the Premises or the Lessee's operations at the Facility, (iii) the occupancy and use of the Premises by the Lessee or by others with its consent or (iv) any Hazardous Substance which has migrated from or from under the Premises. Nothing in the foregoing shall be construed as a submission by the Port Authority to the application to itself of any Environmental Requirements; provided, however, that no immunity or exemption of the Port Authority from any Environmental Requirements shall excuse compliance or be grounds for noncompliance on the part of the Lessee. Without limiting the generality of the foregoing and as part of the Lessee's fulfillment of the foregoing obligations, the Lessee shall be responsible, at its sole cost and expense and subject to the direction of the Port Authority, for:

(1) the preparation of and submission to all applicable Governmental Authorities of any notice, negative declaration, remedial action workplan, no further action letter, remediation agreement or any other documentation or information;

(2) the obtaining of any surety bond or the giving of any other financial assurances; and

(3) complying with the provisions of all Environmental Requirements becoming effective on the termination, expiration or surrender of the letting of the Premises or of any portion thereof under this Agreement, or on the closure or transfer of the Lessee's operations at the Premises.

(d) In addition to and without limiting the generality of the obligations of the Lessee set forth above and elsewhere in this Agreement, the Lessee shall, at its sole cost and expense and in accordance with and subject to the provisions of

Section 20 of this Agreement, upon notice from the Port Authority, promptly take all actions to:

(1) remove and remediate all Analyzed Items from the Bay Avenue Premises to the extent of any increase in the level of any Analyzed Item above the Existing Condition except for any such increase due to a Migrated Hazardous Substance;

(2) completely remove and remediate all Hazardous Substances in, on or under the Premises and at the Facility resulting from or in connection with the Lessee's use and occupancy of the Premises or which have been or permitted to be disposed of, released, discharged or otherwise placed in, on or under the Facility by the Lessee or which have been disposed of, released, discharged or otherwise placed in, on or under the Premises during the term of the letting of the Premises under this Agreement or during the term of any previous agreement between the Lessee and the Port Authority covering the Lessee's use and/or occupancy of the Premises or any portion thereof;

(3) except with respect to remediation and removal of the Existing Condition in the Bay Avenue Premises and Migrated Hazardous Substances which the Lessee is not responsible for pursuant to paragraph (b)(2) of this Section 8, remove and remediate all Hazardous Substances in, on or under the Premises or which have migrated from or from under the Premises to any other property which any Governmental Authority or any Environmental Requirement or any violation thereof required to be remediated or removed; and

(4) except with respect to remediation and removal of the Existing Condition in the Bay Avenue Premises and Migrated Hazardous Substances which the Lessee is not responsible for pursuant to paragraph (b)(2) of this Section 8, remove and remediate all Hazardous Substances in, on or under the Premises or which have migrated from or from under the Premises necessary to mitigate any Environmental Damages.

(e) The obligations set forth in paragraph (d) of this Section shall include but not be limited to the investigation of the environmental condition of the area to be remediated, the preparation of feasibility studies, reports and remedial plans and the performance of any removal, remediation, containment, operation, maintenance, monitoring or restoration work; shall be performed in a good, safe and workmanlike manner; and shall minimize any impact on activities off the Premises. The Lessee

shall promptly provide the Port Authority with copies of all test results and reports generated in connection with such obligations.

(f) Without limiting the Port Authority's remedies under this Agreement or at law or in equity, the Port Authority shall have the right during and after the term of the letting of the Premises under this Agreement to such equitable relief, including restraining injunctions and declaratory judgments, to enforce compliance by the Lessee of its environmental obligations under this Agreement including without limitation all the Lessee's obligations under this Section 8. In the event that the Lessee fails to comply with or perform any of such obligations, the Port Authority at any time during or subsequent to the termination, expiration or surrender of the letting of the Premises or any portion thereof may elect (but shall not be required) to perform such obligations and upon demand the Lessee shall pay to the Port Authority as additional rent its costs thereof, including all overhead costs as determined by the Port Authority. For the purposes of this paragraph, the term "cost" shall be as defined in Section 21 of this Agreement.

(g) Without limiting any other of the Lessee's obligations under this Agreement and except with respect to remediation and removal of the Existing Condition in the Bay Avenue Premises and Migrated Hazardous Substances which the Lessee is not responsible for pursuant to paragraph (b)(2) of this Section 8, the Lessee agrees, unless otherwise directed by the Port Authority, to provide the Manager of the Facility, at the cost and expense of the Lessee and at any time during or subsequent to the term of the letting of the Premises under this Agreement, with such information, documentation, records, correspondence, notices, reports, test results, certifications and any other information as the Port Authority shall request in connection with any Environmental Damages or any Environmental Requirement which the Lessee is obligated to comply with under this Agreement, and the Lessee shall promptly acknowledge, swear to, sign or otherwise fully execute the same when and as directed by the Port Authority. The Lessee agrees that any of the foregoing may be filed by the Port Authority with the appropriate Governmental Authority on behalf of the Lessee at the Lessee's cost and expense. Further, the Lessee agrees, unless otherwise directed by the Port Authority, to provide the Manager of the Facility with copies of all information, documentation, records, correspondence, notices, certifications, reports, test results and all other submissions provided by the Lessee to a Governmental Authority and by a Governmental Authority to the Lessee within two (2) business days that the same are made available to or received by the Lessee with respect to any Environmental Damages and any Environmental

Requirement which the Lessee is obligated to comply with pursuant to this Agreement.

(h) Without limiting the generality of any other provision contained in this Agreement and except with respect to remediation and removal of the Existing Condition in the Bay Avenue Terminal and Migrated Hazardous Substances which the Lessee is not responsible for pursuant to paragraph (b)(2) of this Section 8, the Lessee shall indemnify, hold harmless and reimburse the Port Authority, its Commissioners, officers, employees and representatives from all claims, demands, penalties, fines, liabilities (including strict liability), settlements, attorney and consultant fees, investigation and laboratory fees, removal and remediation costs, court costs and litigation expenses, damages, judgments, losses, costs and expenses of whatsoever kind or nature and whether known or unknown, contingent or otherwise, just or unjust, groundless, unforeseeable or otherwise, arising or alleged to arise out of or in any way related to any Environmental Damages or any Environmental Requirement which the Lessee is obligated to comply with pursuant to this Agreement, or the risks and responsibilities assumed hereunder by the Lessee for the condition of the Premises or a breach or default of the Lessee's obligations under this Section 8. If so directed, the Lessee shall at its own expense defend any suit based upon the foregoing, and in handling such it shall not, without obtaining express advance permission from the General Counsel of the Port Authority, raise any defense involving in any way the jurisdiction of the tribunal over the person of the Port Authority, the immunity of the Port Authority, its Commissioners, officers, agents or employees, the governmental nature of the Port Authority or the provisions of any statutes respecting suits against the Port Authority.

(i) (1) Without limiting the generality of any provision of this Agreement, in the event that Environmental Requirements set forth more than one compliance standard, the Lessee agrees that except as otherwise designated by the Port Authority pursuant to paragraph (i)(2) below the standard or standards to be applied in connection with any obligation it may have under this Agreement with respect to any Environmental Requirement shall be that which requires or permits the lowest level of a Hazardous Substance; provided, however, in the event such lowest level of one or more Hazardous Substance requires or allows the imposition of any restriction of any nature whatsoever upon the use or occupancy of the Premises or any other portion of the Facility or upon any operations or activities conducted or to be conducted on the Premises or the Facility or upon the transfer of the Premises or the Facility, then the Lessee shall remediate such Hazardous Substances to such a level so that there is no such restriction placed upon

the use and occupancy of the Premises or the Facility or upon any operations or activities conducted or to be conducted on the Premises or the Facility.

(2) The Lessee further agrees that, notwithstanding the terms and conditions of subparagraph (i)(1) above, the Port Authority shall have the right at any time and from time to time, acting in its sole discretion and without any obligation whatsoever to the Lessee or otherwise to do so, to designate any higher level or levels of Hazardous Substances or less stringent standard or standards than those required by paragraph (i)(1) above to be applied in connection with any obligation the Lessee may have under this Agreement with respect to any Environmental Requirement and such designation shall be binding upon the Lessee with respect to its obligations under this Agreement with respect to such Environmental Requirement, provided, however, the Port Authority shall have no right to designate any level or standard pursuant to this paragraph (i)(2) which would result in the Lessee being in violation of any Environmental Requirement.

(j) The methodology to be used for the purpose of this Section 8 to determine for any Existing Condition the level of an Analyzed Item at any location in, on or under the Bay Avenue Premises shall be for both soil and ground water, straight line interpolation methodology and, notwithstanding any other evidence to the contrary, the Existing Condition as so determined shall set forth and constitute for all purposes as between the Lessee and the Port Authority the levels of the Analyzed Items in the soil and ground water in, on and under the Bay Avenue Premises.

(k) (1) It is expressly understood and agreed that the proper handling, delivery, treatment, storage, transportation, disposal and depositing (all of the foregoing being hereinafter collectively called "Disposal"), whether on or off the Facility, of any soil, dirt, sand, silt, dredged material, water or other matter (hereinafter collectively called the "Matter") excavated, disturbed or removed by the Lessee (or by any contractor or contractors of the Lessee) at, from or under the Premises (or any other area of the Facility) at any time or times and regardless of the nature or composition of such Matter, including without limitation, any and all Disposal of said Matter in connection with the performance of the Lessee's Construction Work (as defined Section 7 of this Agreement) and any and all remediation and Disposal of said Matter and any and all other remediation and Disposal(whether soil, upper aquifer or otherwise) necessary, required or appropriate as a result of, caused by, incidental to or triggered by such excavation, disturbance or removal of the Matter or arising therefrom, and the taking or doing of any and

all other action or actions necessary, required or appropriate in connection therewith, shall be, except as set forth in paragraph (k)(2) below, the sole and complete responsibility of the Lessee including, without limitation, all costs and expenses thereof and any and all Environmental Damages, Environmental Requirements, claims, penalties and other expenses relating thereto. The foregoing obligations of the Lessee shall obtain and apply with full force and effect irrespective of the nature or source of any contaminant, pollutant, chemical, waste or other substance or whether any of the same is Hazardous Substance or whether any of the same is at a level or levels above or below the level or levels of any of the Analyzed Items constituting the Existing Condition or whether there has or has not been any increase in such level or levels or whether any of the same is a Migrated Hazardous Substance. The Lessee shall perform all of the foregoing in accordance with and subject to all the terms, provisions, covenants and conditions of this Agreement.

(2) Notwithstanding the foregoing set forth in paragraph (k)(1) above, (x) the Port Authority shall pay all costs and expenses for the Disposal of Matter dredged in fulfillment of the Port Authority's obligations pursuant to Section 16(e) hereof and all of the costs and expenses of the Disposal of such dredged Matter shall be included in the "Estimated Cost of a Dredging Project" and the "Actual Cost of a Dredging Project" as defined in said Section 16(e), and (y) the Lessee shall pay all costs and expenses for the Disposal of all Matter performed as part of the Lessee's Construction Work and all of the costs and expenses for the Disposal of such Matter shall be included in the Construction Work Reimbursement Amount or the Funded Work Reimbursement Amount, as applicable, to the extent set forth in Section 7 hereof, provided, however, the Port Authority shall not pay or reimburse the Lessee for the Disposal of any Matter nor shall the costs and expenses of the Disposal of any Matter be applied against the Construction Work Reimbursement Amount or the Funded Work Reimbursement Amount if such Matter was disposed of, released, discharged or otherwise placed on, under or about the Facility by the Lessee.

(3) Without limiting the generality of any other term or condition of this Lease, title to any Matter on the Premises or the Facility excavated by the Lessee and not used at the Premises shall vest in the Lessee upon the excavation thereof and all such Material shall be delivered and deposited by the Lessee at the Lessee's sole cost and expense to a location off the Facility in accordance with the terms and conditions of this Lease and all Environmental Requirements. The entire proceeds, if any, of the sale or other disposition of the Material shall belong to the Lessee.

(4) In the event the Lessee discovers any Hazardous Substance in, on or under the Premises, the Lessee in reporting such Hazardous Substance shall direct such report to the attention of such individual at the subject governmental authority as the Facility Manager shall require in order to assure consistency in the environmental management of the Facility.

(5) Promptly upon final disposition of any Hazardous Substance from the Premises or the Facility, the Lessee shall submit to the Port Authority a "Certification of Final Disposal" stating the type and amount of material disposed, the method of disposal and the owner and location of the disposal facility. The format of such certification shall follow the requirements, if any, of governmental agencies having jurisdiction as if the Port Authority were a private organization and the name of the Port Authority shall not appear on any certificate or other document as a generator or owner of such material.

(l) Without limiting the generality of the provisions of Section 22 of this Agreement, the Port Authority and its designees shall have the right but not the obligation to enter upon the Bay Avenue Premises upon forty-eight (48) hours' notice to the Lessee to conduct testing and related activities from the existing wells made by the borings referred to in Exhibit I, to make additional wells and borings and to conduct testing and related activities therefrom and to perform such activities as shall be necessary to remediate the Existing Condition and any Migrated Hazardous Substance.

(m) If after any remediation performed on the Bay Avenue Premises, whether by the Lessee, the Port Authority or a third party, the Port Authority samples and tests the soil and upper aquifer of the Bay Avenue Premises or portions thereof and sets forth the results of such tests in a report (it being understood, however, that the Port Authority shall not have any obligation hereunder to perform such sampling and testing or to set forth the results thereof in a report), upon delivery of such report and test results to the Lessee, such report and test results shall supersede Exhibit I or the applicable portions thereof if the test results and report are of Analyzed Items which have been previously tested and the results thereof reported in Exhibit I and the existing and new test results are from samples taken from the same well or a new well or boring which is immediately adjacent to such well or boring and shall supplement Exhibit I or the applicable portions thereof if the test results and report would not supersede any test results and reports in Exhibit I as aforesaid.

(n) Without limiting the generality of the provisions of Section 16 of this Agreement, the Lessee agrees to protect and maintain the wells made by the borings referred to in Exhibit I and paragraph (m) of this Section and shall repair any damage thereto not caused by the activities of the Port Authority or its designees, if any, pursuant to paragraphs (l) and (m) of this Section.

(o) Without limiting the generality of any other term or provision of this Agreement, all of the obligations of the Lessee under this Section 8 shall survive the expiration or earlier termination of the letting of the Premises or any portion thereof.

(p) The terms and conditions of this Section 8 are intended to allocate obligations and responsibilities between the Lessee and the Port Authority, and nothing in this Section shall limit, modify or otherwise alter the rights and remedies which the Port Authority or the Lessee may have against third parties at law, equity or otherwise.

(q) Notwithstanding any other term or provision of this Agreement and subject to paragraph (r) below, the Lessee shall be responsible for the remediation of the Existing Condition to the extent that the Existing Condition was caused by the acts or omission of the Lessee or by the acts or omissions any sublessees or others who occupied the Bay Avenue Premises with the permission of the Lessee prior to the term of the letting under this Agreement.

(r) Notwithstanding any other term or condition of this Agreement, it is hereby understood and agreed that the Lessee's obligations under this Agreement, including without limitation paragraphs (b), (c), (d), (e), (g), (h), (i) and (k) of this Section, shall not be nor be deemed to be affected in any way whatsoever if the Existing Condition or any portion thereof or any Migrated Hazardous Substance, is or will be remediated or removed by the Lessee in whole or in part in the fulfillment of any of the Lessee's obligations under this Agreement, whether due to the fact the Lessee cannot remediate or remove one or more Hazardous Substances for which it is responsible to remediate or remove without remediating or removing one or more Analyzed Items or any Migrated Hazardous Substance for which it is not responsible for remediating or removing or due to the cost or expedience or for any other reason, and in no event shall the Port Authority have any responsibility for such remediation or removal including without limitation any obligation to share in the cost of such remediation or removal.

(s) The Lessee acknowledges a Deed Notice (formerly a Declaration of Environmental Restriction) may be recorded by the Port Authority with respect to the Bay Avenue Premises and further it is hereby agreed that no such filing is an obligation of the Port Authority under this Agreement. The Lessee agrees that neither the filing of such Deed Notice nor any other action taken by the Port Authority in compliance with any Environmental Requirement applicable to the Existing Condition shall be a breach of this Agreement or any other obligation of the Port Authority at law or in equity with respect to the letting of the Premises to the Lessee hereunder, including without limitation, any breach of any implied or express covenant of quiet enjoyment. It is contemplated that the installation and maintenance of engineering controls and other conditions may be required in connection with the permission to record and the recording of the Deed Notice. Without limiting any other term or provision of this Agreement, the Port Authority shall have the right to enter upon the Premises for the purpose of installing any such engineering controls or for the taking of any other action necessary to file, as a condition of or required by such Deed Notice, provided, however, nothing in this paragraph (s) is intended to nor shall relieve the Lessee of any of its obligations under this Agreement, including without limitation, its obligations pursuant to Section 16 hereof. Further, it is hereby agreed that this Agreement and the Lessee's letting and use and occupancy of the Premises shall be subject to the requirements of such Deed Notice and the Lessee shall comply with all the requirements of such Deed Notice to the extent of the Lessee's obligations set forth elsewhere in this Agreement other than in this paragraph (s).

Section 9. **[There is no Section 9]**

Section 10. Ingress and Egress

The Lessee shall have the right of ingress and egress between the Premises and the city streets outside the Facility. Such right shall be exercised by means of such pedestrian or vehicular ways, to be used in common with others having rights of passage within the Facility, as may from time to time be designated by the Port Authority for the use of the public. The use of any such way shall be subject to the rules and regulations of the Port Authority which are now in effect or which may hereafter be promulgated for the safe and efficient operation of the Facility. The Port Authority may at any time temporarily or permanently close, or consent to or request the closing of, any such way or any other area at, in or near the Facility presently or hereafter used as such, so long as a means of ingress and egress as provided above remains available to the Lessee. The Lessee hereby releases and discharges the Port Authority and its successors and assigns, of and from any and

all claims, demands, or causes of action which the Lessee may now or at any time hereafter have against any of the foregoing, arising or alleged to arise out of the closing of any way or other area whether within or outside the Facility. The Lessee shall not do or permit anything to be done which will interfere with the free access and passage of others to space adjacent to the Premises or in, along, across or through any streets, ways and walks near the Premises.

Section 11. Governmental and Other Requirements

(a) The Lessee shall procure from all governmental authorities having jurisdiction over the operations of the Lessee hereunder, all licenses, certificates, permits and other authorization which may be necessary for the conduct of such operations.

(b) The Lessee shall promptly observe, comply with and execute all laws and ordinances and governmental rules, regulations, requirements, orders and similar items (each a "Legal Requirement"), including without limitation all Environmental Requirements, now or at any time during the occupancy of the Premises by the Lessee which as a matter of law are applicable to or which affect (i) the Premises, (ii) the operations of the Lessee at the Premises or the Facility, and/or (iii) the use and occupancy of the Premises. The Lessee, at its sole cost and expense, shall make any and all structural and non-structural improvements, repairs or alterations of the Premises required in order to fully satisfy the compliance obligations set forth in this Section.

(c) The obligation of the Lessee to comply with governmental requirements is provided herein for the purpose of assuring proper safeguards for the protection of persons and property in or near the Facility, and proper operation by the Lessee. Such provision herein is not to be construed as a submission by the Port Authority to the application to itself of such requirements or any of them.

(d) The Lessee, at its expense, after notice to the Port Authority, may contest, by appropriate proceedings prosecuted diligently and in good faith, the validity or applicability of any Legal Requirement or Environmental Requirement, provided that: (a) the Port Authority shall not be subject to civil or criminal penalty or to prosecution for a crime, nor shall the Facility or any part thereof be subject to being condemned or vacated, or subject to any lien or encumbrance, by reason of non-compliance or otherwise by reason of such contest; (b) before the commencement of such contest, the Lessee shall furnish to the Port Authority a letter of credit or surety bond satisfactory to the Port Authority, in

form, substance and amount, and shall indemnify the Port Authority against the cost of such compliance and liability resulting from or incurred in connection with such contest or non-compliance (including the costs and expenses in connection with such contest); and (c) the Lessee shall keep the Port Authority regularly advised as to the status of such proceedings. The Port Authority shall be deemed subject to prosecution for a crime if the Port Authority or any of its Commissioners, officers, employees or agents is charged with a crime of any kind whatever unless such charge is withdrawn five (5) days before such party is required to plead or answer thereto.

Section 12. Rules and Regulations

(a) The Lessee covenants and agrees to observe and obey (and to compel its officers, employees and others on the Premises with its consent to observe and obey) the Rules and Regulations of the Port Authority (the "Rules and Regulations") now in effect, and such further reasonable rules and regulations (including amendments and supplements thereto) for the government of the conduct and operations of the Lessee as may from time to time during the letting be promulgated by the Port Authority for reasons of safety, health, or preservation of property, or for the maintenance of the good and orderly appearance of the Premises, or for the safe or efficient operation of the Facility. The Port Authority agrees that, except in cases of emergency, it will give notice to the Lessee of every such further rule or regulation at least five (5) days before the Lessee shall be required to comply therewith.

(b) If a copy of the Rules and Regulations is not attached as Exhibit R to this Agreement, then the Port Authority will notify the Lessee thereof either by delivery of a copy, or by publication in a newspaper published in the Port of New York District, or by making a copy available at the office of the Secretary of the Port Authority.

(c) No statement or provision in the Rules and Regulations shall be deemed a representation or promise by the Port Authority that the services or privileges described shall be or remain available, or that the charges, prices, rates or fees stated therein shall be or remain in effect throughout the letting, all of the same being subject to change by the Port Authority from time to time whenever it deems a change advisable.

Section 13. Method of Operation

(a) In the performance of its obligations hereunder and in the use of the Premises, the Lessee shall conduct its

operations in an orderly and proper manner, so as not to annoy disturb or be offensive to others near the Premises or at the Facility, and within twenty-four (24) hours the Lessee shall remove the cause of any objection made by the Port Authority relative to the demeanor, conduct or appearance of any of the employees of the Lessee or of any others on the Premises with the consent of the Lessee.

(b) The Lessee shall not allow any garbage, debris or other waste materials (whether solid or liquid) to collect or accumulate on the Premises and the Lessee shall remove from the Premises and from the Facility all garbage, debris and other waste materials (whether solid or liquid) arising out of its operations hereunder. Any such material which may be temporarily stored shall be kept in suitable waste receptacles, the same to be made of metal and equipped with tight-fitting covers, and in any case to be designed and constructed to contain safely the waste material placed by the Lessee therein. Said receptacles shall be provided and maintained by the Lessee and shall be kept covered except when being filled or emptied. The Lessee shall use extreme care when effecting removal of all such material, shall effect such removal at such times and by such means as are first approved by the Port Authority, and shall in no event make use of any facilities or equipment of the Port Authority for the removal of such material except with the prior consent of the Port Authority.

(c) The Lessee shall not do or permit to be done anything which may interfere with the effectiveness or accessibility of the utility, mechanical, electrical and other systems installed or located anywhere at the Facility.

(d) The Lessee shall not commit any nuisance or permit its employees or others on the Premises with its consent to commit or create or continue or tend to create any nuisance in or near the Facility.

(e) The Lessee shall take all reasonable measures to eliminate vibrations tending to damage the Premises or the Facility or any part thereof.

(f) The Lessee shall not cause or permit to be caused or produced upon the Premises, to permeate the same or to emanate therefrom, any unusual, noxious or objectionable smokes, gases, vapors or odors.

(g) The Lessee shall not do or permit to be done any act or thing at the Facility which shall or may subject the Port Authority to any liability or responsibility for injury to any person or persons or damage to any property.

(h) The Lessee shall not overload any floor, roof, land surface, bulkhead, pavement, landing, pier or wharf at the Facility and shall repair, replace or rebuild any such, including but not limited to supporting members, damaged by overloading.

(i) The Lessee shall permit the use of the Premises (not excluding the Berthing Area) at any time and from time to time for the installation, maintenance and operation of such navigation lights as may be required by the United States Coast Guard or other governmental authority having jurisdiction, and the Lessee shall furnish such electricity as may be required for use by navigation lights which may be so installed.

(j) The Lessee shall not do or permit to be done any act or thing on the Premises or at the Facility which (i) will invalidate or conflict with any fire insurance policies covering the Premises or any part thereof, or the Facility, or any part thereof, or (ii) which, in the opinion of the Port Authority, may constitute an extra-hazardous condition, so as to increase the risks normally attendant upon the operations permitted by this Agreement, or (iii) which will increase the rate of any fire insurance, extended coverage or rental insurance on the Facility or any part thereof or upon the contents of any building thereon. The Lessee shall promptly observe, comply with and execute the provisions of any and all present and future rules and regulations, requirements, orders and directions of the Insurance Services office of New Jersey, or of any other board or organization exercising or which may exercise similar functions, which may pertain or apply to the operations of the Lessee on the Premises, and the Lessee shall, subject to and in accordance with the provisions of this Agreement relating to construction by the Lessee, make all improvements, alterations and repairs of the Premises that may be required at any time hereafter by any such present or future rule, regulation, requirement, order or direction. Subject to the right of the Lessee to contest same as set forth in Paragraph 11(d), if by reason of any failure on the part of the Lessee to comply with the provisions of this paragraph, any rate for fire insurance, extended coverage or rental insurance on the Premises or any part thereof, or on the Facility or any part thereof, shall at any time be higher than it otherwise would be, then the Lessee shall pay to the Port Authority that part of all premiums paid by the Port Authority which shall have been charged because of such violation or failure by the Lessee.

(k) From time to time and as often as required by the Port Authority, the Lessee shall conduct pressure, water-flow and other appropriate tests of the fire-extinguishing system and fire-fighting equipment on the Premises, whether furnished by the Port Authority or by the Lessee. The Lessee shall keep all

firefighting and fire-extinguishing equipment well supplied with a fresh stock of chemicals and with sand, water or other materials as the case may be, for the use of which such equipment is designed, and shall train its employees in the use of all such, equipment, including in such training periodic drills.

(l) The Lessee shall promptly raise and remove or cause to be raised and removed any and all objects of any kind, including vessels or other floating structures and equipment (whether or not intended to be floating), owned or operated by the Lessee, or by a corporation, company or other organization or person associated, affiliated or connected with the Lessee or for which the Lessee acts as agent, stevedore or terminal operator, (or of others going to or from the Premises on business with the Lessee) which shall have sunk, settled or become partially or wholly submerged at the Facility. In addition, the Lessee shall promptly raise and remove or cause to be raised and removed any and all objects of any kind, including vessels or other floating structures and equipment (whether or not intended to be floating), which shall have sunk, settled or become partially or wholly submerged in the Berthing Area. The provisions of the immediately preceding sentence shall be applicable whether or not the aforesaid object is owned by the Lessee or is connected in any way with the Lessee or its occupancy of or operations at the Premises, and the Port Authority shall have no obligation to raise or remove any such object unless its presence in the Berthing Area is the result of the sole negligence or willful act of the Port Authority.

(m) The Lessee shall not throw, discharge or deposit or permit to be thrown, discharged or deposited any cargo, refuse, ashes or any material whatsoever, into or upon the waters of or about the Facility.

Section 14. Signs

(a) Except with the prior consent of the Port Authority, the Lessee shall not erect, maintain or display any advertising, signs, posters or similar devices at or on the Premises or elsewhere at the Facility.

(b) Upon demand by the Port Authority, the Lessee shall remove, obliterate, or paint out any and all advertising, signs, posters, and similar devices placed by the Lessee on the Premises or elsewhere at the Facility and in connection therewith at the expiration or earlier termination of the letting, shall restore the Premises and the Facility to the condition thereof prior to the placement of such advertising, sign, poster or device. In the event of a failure on the part of the Lessee so to remove, obliterate or paint out each and

every such piece of advertising, sign, poster or device and so to restore the Premises and the Facility, the Port Authority may perform the necessary work and the Lessee shall pay the costs thereof to the Port Authority on demand.

Section 15. Indemnity and Liability Insurance

(a) The Lessee shall indemnify and hold harmless the Port Authority, its Commissioners, officers, employees and representatives, from all claims and demands of third persons including but not limited to claims and demands for death, claims and demands for personal injuries, and claims and demands for property damages, arising out of the use or occupancy of the Premises by the Lessee or by its officers, agents, employees, or representatives, contractors, subcontractors or their employees, or by others on the Premises with the consent of any of the foregoing persons, or out of any other acts or omissions of the Lessee, its officers, agents or employees on the Premises or elsewhere at the Facility, or out of the acts or omissions of others on the Premises with the consent of the Lessee, including claims and demands of the party, if any, from which the Port Authority derives its rights in the Facility for indemnification arising by operation of law or through agreement of the Port Authority with such party.

(b) If so directed by the Port Authority, the Lessee shall at its own expense defend any suit based upon any such claim or demand (even if such suit, claim or demand is groundless, false or fraudulent) in which event it shall not, without obtaining express advance permission from the General Counsel of the Port Authority, raise any defense involving in any way the jurisdiction of the tribunal over the person of the Port Authority, the immunity of the Port Authority, its Commissioners, officers, agents or employees, the governmental nature of the Port Authority or the provisions of any statutes respecting suits against the Port Authority.

(c) The Lessee, in its own name as assured, shall maintain and pay the premiums on the following described policies of liability insurance:

(i) Commercial General Liability Insurance including but not limited to coverage for Premises-Operations and Products Liability-Completed Operations, which coverage shall not exclude claims arising out of or in connection with operations conducted within fifty feet of railroad property, with a minimum combined single limit coverage for bodily injury and property damage of $10,000,000.00. Said insurance shall also include coverage for explosion, collapse and underground property damage hazards. If the Lessee's operations entail the ownership, maintenance,

operation, or use of any watercraft, whether owned, non-owned, or hired, the Lessee shall have any exclusion for such watercraft deleted or shall purchase equivalent coverage under a policy of Protection and Indemnity Insurance and shall provide the Port Authority with a certificate of insurance evidencing such coverage.

(ii) Commercial Automobile Liability Insurance covering all owned, non-owned or hired vehicles used in connection with its operations hereunder with a minimum combined single limit coverage for bodily injury and property damage of $2,000,000.00.

(iii) Environmental Liability Insurance, with a minimum combined single limit coverage for bodily injury and property damage for both gradual and sudden occurrences of $5,000,000.00.

(iv) Workers' Compensation and Employers' Liability Insurance in accordance with the requirements of law. The Workers' Compensation Policy shall be specially endorsed to include coverage afforded by (aa) the U.S. Longshoremen's and Harbor Workers' Compensation Act and Coverage B - "Jones Act, maritime (including coverage for Masters or Members of the Crew of Vessels) and (bb) Coverage - B under the Federal Employers' Liability Act.

(d) With the exception of the Workers' Compensation and Employers' Liability Insurance Policy, each policy of insurance described in paragraph (c) of this Section shall include the Port Authority as an additional insured (including, without limitation, for purposes of Premises operations and completed-operations) and each such policy shall contain a provision that the insurer shall not, without obtaining express advance permission from the General Counsel of the Port Authority, raise any defense involving in any way the jurisdiction of the tribunal over the person of the Port Authority, the immunity of the Port Authority, its Commissioners, officers, agents or employees, the governmental nature of the Port Authority or the provisions of any statutes respecting suits against the Port Authority. Each such policy shall contain a contractual liability endorsement covering the indemnity obligations of the Lessee under this Section and such policies shall not contain any care, custody or control exclusions. Such insurance shall also contain an endorsement providing that the protection afforded the Lessee thereunder with respect to any claim or action against the Lessee by a third party shall pertain and apply with like effect with respect to any claim or action against the Lessee by the Port Authority and against the Port Authority by the Lessee, but said endorsement shall not limit, vary, change or affect the

protections afforded the Port Authority as an additional insured.

(e) As to insurance of any type whatsoever required or permitted by any provision of this Agreement, a certified copy of each of the policies or a certificate evidencing the existence thereof, or a binder, shall be delivered to the Port Authority, as the case may be, either prior to the commencement of the term hereof (with respect to insurance provided for in this Section 15) or prior to the commencement of any specific work item (with respect to insurance provided for in Section 7). In the event any binder is delivered it shall be replaced with due diligence by a certified copy of the policy or by a certificate. Each such copy or certificate shall contain a valid provision or endorsement that the policy may not be cancelled, terminated, changed or modified, without giving ten (10) days' written advance notice thereof to the Port Authority. A binder evidencing each renewal policy shall be delivered to the Port Authority at least fifteen (15) days prior to the expiration date of each expiring policy, except for any policy expiring after the date of expiration of the letting hereunder, as the letting may be from time to time extended (or after the completion of a specific work item with respect to the insurance provided for in Section 7), and a certificate or a certified copy of each such renewal policy shall be delivered to the Port Authority with due diligence. Notwithstanding the foregoing, it is specifically understood and agreed that the Port Authority shall have the right upon notice to the Lessee given from time to time and at any time to require the Lessee to increase any or all of the minimum limits to commercially reasonable amounts, or if any carrier issuing any one or more such policies shall be or become unsatisfactory to the Port Authority, the Lessee shall promptly comply therewith and shall promptly submit a certificate or certificates evidencing the same or substitute such carrier with another carrier satisfactory to the Port Authority.

Section 16. Maintenance and Repair

(a) The Lessee shall at all times keep the Premises clean, and in an orderly condition and appearance, together with all the fixtures, equipment and personal property of the Lessee located in or on the Premises.

(b) The Lessee shall repair, replace, rebuild and paint all or any part of the Premises or of the Facility which may be damaged or destroyed by the acts or omissions of the Lessee or by those of its officers or employees, or of other persons on or at the Premises with the consent of the Lessee.

(c) Subject to the provisions of paragraph (f) of this Section and Section 17 of this Agreement, throughout the term of the letting under this Agreement, the Lessee shall assume the entire responsibility for, and shall relieve the Port Authority from all responsibility from, all care, maintenance, repair and rebuilding whatsoever in the Premises, whether such care, maintenance, repair, or rebuilding be ordinary or extraordinary, partial or entire, inside or outside, foreseen or unforseen, structural or otherwise; and without limiting the generality of the foregoing the Lessee shall do all preventive maintenance, maintain and make repairs and replacements, structural or otherwise to all improvements located on the Premises and all other fixtures, machinery, or equipment now or hereafter belonging to or connected with said Premises or the Lessee's operations being conducted thereon, including without limitation thereto all maintenance, repair and replacement of the following items: (1) paving, which shall mean maintenance paving, crack sealing, weed removal, repair of damaged or overstressed surfaces, manholes, catch basins, underground storm water pipes, and grate support systems. In addition, the Lessee shall be responsible for maintenance repairs, and damages, that are required above the structural concrete chamber of catch basins and manholes. Such repairs shall include the concrete brick collar, concrete collar, brick collar, asphalt concrete pavement, Portland cement concrete pavement, the frame and grate or manhole cover and silt bucket when and where applicable. For the purpose of manhole and catch basin repair, the top of the structural chamber shall be the top of the concrete slab that covers the vertical walls of the underground manhole structure, and for the purpose of catch basin and manhole repair, the top of the structural chamber shall be the top of the (cast-in-place or pre-cast) vertical walls of the underground catch basin and manhole structure; (2) crane rails and rail foundations; (3) scales; (4) rail tracks on the Premises which are installed by the Lessee as part of Lessee's Construction Work (specifically excluding all rail tracks currently on the Premises as well as any tracks which cross the Premises and serve any other part of the Facility; (5) lights, light poles and light pole foundations; (6) sprinkler systems; (7) gas and electric from the meter (utility companies are responsible up to the meter); (8) water pits; (9) container cranes; (10) the electrical system, equipment and fixtures, including, without limitation, lighting fixtures, switches, outlets, receptacles and other electrical devices and accessories, and all relamping and fuse replacement; (11) the plumbing system, fixtures and equipment, and all finished plumbing; (12) buildings and all parts thereof; (13) special mooring devices and special loading devices, whether mechanical, electrical, hydraulic or otherwise; (14) fencing, (15) signs; (16) fire extinguishers; and (17) all painting. The Lessee shall maintain all such improvements, fixtures, machinery and equipment at all times in good

condition, and shall perform all necessary preventive maintenance thereto so that at the expiration or termination of the letting and all times during the letting, the same (or a reconstruction of all or any part thereof) will be in as good condition as at the commencement thereof (or, in the case of improvements made during the letting hereunder, in as good condition as at the time of the installation or construction thereof), except for reasonable wear which does not adversely affect the watertight condition or structural integrity of the buildings or other structures on the Premises or adversely affect the efficient or the proper utilization of any part of the Premises or the environmental condition thereof. The Lessee shall make frequent periodic inspections of the Premises and subject to Sections 7, 17 and 20 of this Agreement shall make all repairs and replacements, and do all rebuilding, inside and outside, ordinary and extraordinary, partial and entire, foreseen and unforeseen, structural or otherwise, regardless of the cause of the condition requiring such repairs, rebuilding or replacements, which repairs, rebuilding and replacements by the Lessee shall be in quality and class not inferior to the original in materials and workmanship. With respect to anything originally supplied or installed by the Port Authority, the Lessee shall have the benefit of the warranty, if any, running to the Port Authority, to the extent assignment thereof does not impair or void the same.

(d) Without limiting the obligations of the Lessee stated elsewhere in this Agreement, the Lessee shall be solely responsible to the Port Authority for loss or theft of or damage to any and all personal property, equipment and fixtures belonging to the Port Authority or for which it is responsible, located or to be located in or on the Premises and shall promptly replace or repair the same within twenty (20) days after such loss, theft or damage (except that if any such repair requires activity over a period of time, then the Lessee shall commence to perform such repair within such twenty (20) day period and shall diligently proceed therewith without interruption); and the Lessee shall yield and deliver the same or replacements thereof to the Port Authority at the expiration or earlier termination of the letting under this Agreement in the same condition as at the commencement of the letting (or such later time at which the Lessee became responsible for same), reasonable wear not materially affecting the efficient use and functioning of the same excepted.

(e) (1) Except with respect to those portions of the Berthing Area which have been deepened to a depth of forty-five (45) or fifty (50) feet (which shall be subject to the provisions of subsections (2) and (3) of this Paragraph respectively), upon sixty (60) days' notice from the Lessee that any part of the Berthing Area (excluding the area of the natural

slope) has shallowed to a depth of thirty-six (36) feet below mean low water, then upon the Lessee's making such part of the Berthing Area available for dredging operations, the Port Authority, at no expense to the Lessee, shall proceed (to the extent permitted by governmental authorities having jurisdiction) to dredge such part of the Berthing Area specified in the said notice (or such portion thereof as may be necessary), either directly or through a contractor, to a depth of thirty-eight (38) feet below mean low water (excluding the area of the natural slope). The term "mean low water" as used in this subparagraph shall mean mean low water as most recently at the time of execution of this Agreement determined by observations of the United States Coast and Geodetic Survey. Notwithstanding the foregoing, any dredging required under this subparagraph shall be only such as shall produce (or leave in place) such depths and slopes as may be required in the opinion of the Port Authority for underwater support of structures, which opinion shall be controlling.

(2) With respect to those portions of the Berthing Area which had been deepened to a depth of forty-five (45) feet prior to the commencement of the term hereof or which are deepened to a depth of forty-five (45) feet as part of the Lessee's Construction Work, upon sixty (60) days' notice from the Lessee that any such part of the Berthing Area has shallowed to a depth of forty-three (43) feet below mean low water, then upon the Lessee's making such part of the Berthing Area available for dredging operations, the Port Authority, at no expense to the Lessee, shall proceed (to the extent permitted by governmental authorities having jurisdiction) to dredge such part of the Berthing Area specified in the said notice (or such portion thereof as may be necessary), either directly or through a contractor, to a depth of forty-five (45) feet below mean low water. The term "mean low water" as used in this subparagraph shall mean mean low water as most recently at the time of execution of this Agreement determined by observations of the United States Coast and Geodetic Survey. Notwithstanding the foregoing, any dredging required under this subparagraph shall be only such as shall produce (or leave in place) such depths and slopes as may be required in the opinion of the Port Authority for underwater support of structures, which opinion shall be controlling.

(3) With respect to those portions of the Berthing Area which are deepened to a depth of fifty (50) feet as part of the Lessee's Construction Work, upon sixty (60) days' notice from the Lessee that any part of the Berthing Area has shallowed to a depth of forty-eight (48) feet below mean low water, then upon the Lessee's making such part of the Berthing Area available for dredging operations, the Port Authority, at no expense to the Lessee, shall proceed (to the extent permitted

by governmental authorities having jurisdiction) to dredge such part of the Berthing Area specified in the said notice (or such portion thereof as may be necessary), either directly or through a contractor, to a depth of fifty (50) feet below mean low water. The term "mean low water" as used in this subparagraph shall mean mean low water as most recently at the time of execution of this Agreement determined by observations of the United States Coast and Geodetic Survey. Notwithstanding the foregoing, any dredging required under this subparagraph shall be only such as shall produce (or leave in place) such depths and slopes as may be required in the opinion of the Port Authority for underwater support of structures, which opinion shall be controlling.

(4) (i) Notwithstanding any other provision of this Section, in the event the Port Authority shall determine that the Estimated Cost of a Dredging Project (as defined below) on average may exceed Eighty Dollars and No Cents ($80.00) (adjusted as provided hereinafter) per cubic yard calculated from the difference in bottom elevations as determined by pre-dredge soundings and the bottom elevations (including normal overdredge amounts) called for hereunder, the the Port Authority shall not be obligated to perform such Dredging Project unless the Lessee agrees to pay the Port Authority the amount by which its Actual Cost of such Dredging Project on average exceeds Eighty Dollars and No Cents ($80.00) (adjusted as provided hereinafter) for cubic yard. Notwithstanding the foregoing, if the Lessee shall not agree to pay such excess to the Port Authority with respect to a Dredging Project, the Port Authority shall nevertheless be required to perform such Dredging Project if the Lessee shall provide a subsequent notice, not more frequently than once a year, with respect to such Dredging Project (or if same is included in a notice with respect to a subsequent larger or different Dredging Project) and the Lessee shall either be willing, as of the time of the sending of such subsequent notice, to pay the excess with respect to such Dredging Project or the Estimated Cost of such Dredging Project is then estimated to be on average less than or equal to Eighty Dollars and No Cents ($80.00) (adjusted as provided hereinafter) per cubic yard at the time of such subsequent notice is given.

(ii) In the event the Lessee shall have agreed to pay the excess dredging costs as provided in Subsection (i) with respect to any Dredging Project and in the further event the Port Authority's Actual Cost of such Dredging Project on average shall exceed Eighty Dollars and No Cents ($80.00) (adjusted as provided hereinafter) per cubic yard then upon the completion of such Dredging Project the Port Authority shall render a bill, supported by substantiating documents, to the Lessee setting forth the Port Authority's Actual Cost of such Dredging Project

and the amount of same on average in excess of Eighty Dollars and No Cents ($80.00) (adjusted as provided hereinafter) per cubic yard and the Lessee shall promptly pay the amount of such excess to the Port Authority.

(iii) For the purposes of this Agreement:

A "Dredging Project" shall mean the dredging of a specific portion of the Berthing Area as specified in a notice given as provided in subparagraph (1), (2) or (3) of this Paragraph.

The "Estimated Cost of a Dredging Project" shall mean the estimated total cost of a Dredging Project and shall include, but not be limited to, the cost of dredging, transportation, processing (including amendment, separation, removal, transportation and disposal of trash and debris), disposal (including mobilization at disposal sites) of any dredged material, insurances, compliance with environmental laws and obtaining necessary permits, work to address unanticipated site conditions; and an amount equal to: (i) fifteen percent (15%) of all the foregoing if the Estimated Cost of a Dredging Project per cubic yard calculated from the difference in bottom elevations as determined by pre-dredge soundings and the bottom elevations as determined by post-dredge soundings (including normal overdredge amounts) does not exceed Twenty-four Dollars and No Cents ($24.00); (ii) twelve and one-half percent (12.5%) of all the foregoing if the Estimated Cost of a Dredging Project per cubic yard calculated from the difference in bottom elevations as determined by pre-dredge soundings and the bottom elevations as determined by post-dredge soundings (including normal overdredge amounts) exceeds Twenty-four Dollars and No Cents ($24.00) but does not exceed Thirty-five Dollars and No Cents ($35.00); and (iii) ten percent (10%) of all the foregoing if the Estimated Cost of a Dredging Project per cubic yard calculated from the difference in bottom elevations as determined by pre-dredge soundings and the bottom elevations as determined by post-dredge soundings (including normal overdredge amounts) exceeds Thirty-five Dollars and No Cents ($35.00).

The "Actual Cost of a Dredging Project" shall mean the actual total cost of a Dredging Project and shall include, but not be limited to, the cost of dredging, transportation, processing (including amendment; separation, removal, transportation and disposal of trash and debris), disposal (including mobilization at disposal sites) of any dredged material, insurances, compliance with environmental laws and obtaining necessary permits, work to address unanticipated site conditions; and an amount equal to: (i) fifteen percent (15%) of all the foregoing if the Actual Cost of a Dredging Project per cubic yard calculated from the difference in bottom

elevations as determined by pre-dredge soundings and the bottom elevations as determined by post-dredge soundings (including normal overdredge amounts) does not exceed Twenty-four Dollars and No Cents ($24.00); (ii) twelve and one-half percent (12.5%) of all the foregoing if the Actual Cost of a Dredging Project per cubic yard calculated from the difference in bottom elevations as determined by pre-dredge soundings and the bottom elevations as determined by post-dredge soundings (including normal overdredge amounts) exceeds Twenty-four Dollars and No Cents ($24.00) but does not exceed Thirty-five Dollars and No Cents ($35.00); and (iii) ten percent (10%) of all the foregoing if the Actual Cost of a Dredging Project per cubic yard calculated from the difference in bottom elevations as determined by pre-dredge soundings and the bottom elevations as determined by post-dredge soundings (including normal overdredge amounts) exceeds Thirty-five Dollars and No Cents ($35.00).

(iv) For purposes of this Paragraph (e), the Eighty Dollar ($80) figure referenced throughout this Paragraph shall be increased by two percent (2%) per annum, compounded annually, commencing as of January 1, 2001 and each subsequent January 1st occurring during the term of the letting.

(5) Notwithstanding any other provision of this Section, the Port Authority shall not be obligated to perform the dredging work set forth in subparagraph (1), (2) or (3) of this paragraph as to any part of the portion of the Berthing Area described in the Lessee's notice given to the Port Authority under the aforesaid subparagraphs as long as any vessel or other floating structure, equipment or other personal property (whether or not intended to be floating) is sunk, settled or partially or wholly submerged in such part of the Berthing Area. The provisions of this subparagraph shall be applicable whether or not the aforesaid object is owned by the Lessee or is connected in any way with the Lessee or its occupancy of or operations at the Premises. The Port Authority shall have no obligation to raise or remove any such object unless its presence in the Berthing Area is the result of the sole negligence or willful act of the Port Authority.

(f) Except under circumstances as to which paragraph (b) of this Section applies, upon receipt of notice that repair or replacement of such of the following as are located in or are a part of the Premises is required: (1) the structure of the wharf including decking, fender systems (but not backing logs or bumpers), and standard mooring devices; (2) the water distribution system (i) up to the closer of twenty (20) feet from the exterior building walls of the building being serviced or the valve connection thereto and (ii) up to the closer of the ships' water pits or the single meter on the Premises or closest meter on the Premises servicing said water pit (but in no event

the ships' water pits themselves); and (3) the underground sanitary systems; the Port Authority will make such repairs and replacements to the extent necessary to keep such part of the Premises in a reasonably good condition for the operations of the Lessee hereunder, but the Port Authority shall not be obligated to make any repairs or replacements to bring the Premises to a better condition than that existing at the commencement of the letting (or, in the case of improvements made during the letting, in as good condition as at the time of the installation or construction thereof). The Port Authority's responsibilities under this paragraph shall be limited to bearing the expense of repair or replacement, and without limiting the foregoing the Port Authority shall have no responsibility with respect to any repairs or replacements which are the obligation of the Lessee under any other provision of this Agreement. The Port Authority shall have no responsibility with respect to any repairs or replacements which are required because of any casualty whether or not insured or insurable, except as expressly provided in Section 17 of this Agreement. If the Port Authority shall fail, after a reasonable period of time to perform its repair and replacement obligations under this paragraph, the Lessee, as its sole remedy, shall perform the work, and the Port Authority shall on demand pay the Lessee its actual certified cash expenditures to third parties therefor, or, at the option of the Port Authority, shall extend to the Lessee a credit against its rental obligations under this Agreement in an amount equal to such expenditures. Furthermore, prior to the commencement by the Port Authority of any work set forth in the Lessee's notice to the Port Authority, the Lessee shall take all precautions necessary to protect persons or property at the Facility, including the immediate performance by the Lessee of any work required to correct conditions which involve danger to persons or property, and the Port Authority will reimburse the Lessee for such work as provided in this paragraph. The Lessee shall indemnify and hold harmless the Port Authority, its Commissioners, officers, employees, agents, and representatives, from and against all claims and demands, including but not limited to claims and demands for death, claims and demands for personal injuries, and claims and demands for property damages, of any third persons whatsoever, including, but not limited to, the Lessee's officers, employees, agents, and representatives which may arise from the condition of the Premises or any part thereof, or from the failure of the Lessee to notify the Port Authority of conditions requiring repair or replacement, or from the failure of the Lessee to make timely corrections of dangerous or potentially dangerous conditions in or on the Premises. Except as set forth above, the Lessee hereby releases and discharges the Port Authority, its Commissioners, officers, employees, agents, and representatives from any liability for damages to the Lessee, consequential, or otherwise, in connection with any of the

provisions of this paragraph concerning repairs or replacements to any portion of the Premises, including without limitation thereto any failure on the part of the Port Authority for any reason whatsoever to make any repair or replacement, and including without limitation thereto any act or omission of the Port Authority, its officers, agents, employees, contractors or their employees, connected with the performance of such repairs or replacements.

(g) The obligation of the Lessee as set forth in paragraphs (b) and (c) of this Section and in Section 17 in the event of damage or destruction covered by any contract of insurance under which the Port Authority is the insured (including, but not limited to, fire, extended coverage or pier and wharf insurance) is hereby released to the extent that the loss is recouped by actual payment to the Port Authority of the proceeds of such insurance; provided, however, that if at any time because of this release the insurance carrier of any policy covering the Premises or any part thereof shall increase the premiums otherwise payable for fire, extended coverage or rental coverage applicable to the Premises the Lessee shall pay to the Port Authority an amount equivalent to such increase or increases on demand; and provided, further, that if at any time this release shall invalidate any such policy of insurance or reduce, limit, or void the rights of the Port Authority thereunder, or if because of this release, any such insurance carrier shall cancel such endorsement or refuse to renew the same or shall take any other action to alter, decrease or diminish the benefits of the Port Authority under the policy, then the release shall be void and of no effect.

Section 17. Casualty

(a) In the event that, as a result of a casualty insured against in favor of the Port Authority under the standard form of fire insurance policy and extended coverage endorsement, or under a policy of pier or wharf insurance, carried by it on (1) the wharf, fender systems (but not backing logs or bumpers), and standard mooring devices; (2) the water distribution system (i) up to the closer of twenty (20) feet from the exterior building walls of the building being serviced or the valve connection thereto and (ii) up to the closer of the ships' water pits or the single meter on the Premises or closest meter on the Premises servicing said water pit (but in no event the ships' water pits themselves); or (3) the underground sanitary systems; the same is damaged (without the fault of the Lessee, its officers, employees, or others on or at the Premises with its consent) so as to render the Premises untenantable in whole or substantial part, then

(1) if, in the opinion of the Port Authority, the necessary repairs or rebuilding can be completed within ninety (90) days after the occurrence of the damage, the Port Authority shall repair or rebuild with due diligence, and the rental hereunder shall be abated as provided in this Agreement, for the period from the occurrence of the damage to the completion of the repairs or rebuilding, whether or not the work of repair or rebuilding is actually completed within the said ninety (90) days; or

(2) if, in the opinion of the Port Authority, such repairs or rebuilding cannot be completed within ninety (90) days after the occurrence of the damage, or if the wharf or one or more of the structures or buildings which are a part of the Premises or the entire Premises require rebuilding, then the Port Authority shall have options: (i) to proceed with due diligence to repair or to rebuild as necessary; or (ii) to terminate the letting as to the damaged wharf area, structure or structures, building or buildings or portion thereof only; or (iii) to cancel this Agreement and terminate the letting as to the entire Premises; and the rental payable under this Agreement shall be abated, as provided in this Agreement, either, as the case may require, for the period from the occurrence of the damage to the completion of repairs and rebuilding, or for the period from the occurrence of the damage to the effective date of termination, for the area or areas involved.

(b) "Substantial part" shall mean for the purpose of this Section at least twenty-five per cent (25%) of the usable wharf area or the usable floor space in the structure or building or part thereof comprising the Premises, or, if there is more than one structure or building on the Premises, at least twenty-five per cent (25%) of the aggregate usable floor space comprising the Premises in all of the structures and buildings covered by insurance.

The Port Authority shall not be obligated to obtain or maintain in force any insurance referred to in this Section, and, furthermore, if any such insurance is maintained and if any damage described in this paragraph (a) shall have been caused or contributed to by the fault of the Lessee, its officers, employees, or others on or at the Premises with the Lessee's consent, then, notwithstanding the foregoing, the Port Authority shall have no obligation to repair such damage unless the proceeds of insurance covering such damage actually paid to the Port Authority by the insurance company are at least equal in amount to the Port Authority's estimate of the cost of such repairs. Nothing herein shall be construed to imply as an obligation on the Port Authority to carry any such insurance.

The Port Authority will notify the Lessee if the Port Authority cancels any fire, extended coverage, all-risk, or pier or wharf insurance, or if it does not renew a policy of such insurance, provided such insurance is in effect on the Commencement Date hereunder.

(c) In the event the letting under this Agreement is terminated pursuant to the provisions of this paragraph, this Agreement and the letting hereunder shall cease and expire on the effective date of termination stated in the notice as if such date were the date originally stated herein for the expiration of this Agreement. Such termination shall not relieve the Lessee of any obligations or liabilities which shall have accrued on or before the effective date of termination stated in the notice, or which shall mature on such date.

(d) In the event that as a result of a casualty, whether or not insured or insurable, any portion of the Premises other than (1) the wharf including decking, fender systems (but not backing logs or bumpers), and standard mooring devices; (2) the water distribution system (i) up to the closer of twenty (20) feet from the exterior building walls of the building being serviced or the valve connection thereto and (ii) up to the closer of the ships' water pits or the single meter on the Premises or closest meter on the Premises servicing said water pit (but in no event the ships' water pits themselves); or (3) the underground sanitary systems; the lessee shall rebuild the same with due diligence. With respect to all portions of the Premises other than (1) the wharf including decking, fender systems (but not backing logs or bumpers), and standard mooring devices; (2) the water distribution system (i) up to the closer of twenty (20) feet from the exterior building walls of the building being serviced or the valve connection thereto and (ii) up to the closer of the ships' water pits or the single meter on the Premises or closest meter on the Premises servicing said water pit (but in no event the ships' water pits themselves); or (3) the underground sanitary systems, the Lessee shall secure and maintain in its own name as assured and shall pay the premiums on the following policy of insurance in the limit set forth below, which policy shall be effective during the term of the letting under this Agreement:

(1) All risk property damage insurance covering the full replacement cost of any such property owned, leased, or within the care, custody or control of the Lessee and now or in the future located on or constituting a part of the Premises, except for any personal property owned by the Port Authority. Full replacement cost shall be determined by the Port Authority. No omission on the part of the Port Authority to make such determination shall relieve the Lessee of its obligations to maintain the

appropriate insurance under this paragraph. Such insurance shall cover and insure against such hazards and risks as at least would be insured against under the Standard Form of Fire Insurance policy in the State of New Jersey, or any successor thereto, and the broadest form of extended coverage endorsement prescribed as of the effective date of said insurance by the rating organization having jurisdiction, including without limitation hazards and risks of flood, earthquake, windstorm, cyclone, tornado, hail, explosion, riot, civil commotion, aircraft, vehicles and smoke, and, if the Port Authority so requests, also covering nuclear property losses and contamination and boiler and machinery hazards and risks (if said coverage regarding nuclear property losses and contamination is or becomes available at commercially reasonable rates).

(2) Unless otherwise directed by the Port Authority, the property damage insurance policy required by this paragraph shall name the Port Authority and the Lessee (with insurance clauses consistent with the provisions of this Agreement) as the insureds, as their respective interests may appear, and shall provide that loss, if any, shall be adjusted with and payable to the Port Authority. As to any insurance required by this paragraph, a certificate of insurance, or binders, shall be delivered by the Lessee to the Port Authority on or before the Commencement Date. In the event any binder is delivered, it shall be replaced within thirty (30) days by a certificate of insurance. Each such policy shall contain a valid provision or endorsement that the policy may not be cancelled, terminated, changed or modified, without giving at least thirty (30) days' written advance notice thereto to the Port Authority and an endorsement to the effect that the insurance as to the interest of the Port Authority shall not be invalidated by any act or negligence of the Lessee or any other insured. Each policy of insurance shall have attached thereto an endorsement that the Port Authority will be given at least thirty (30) days' prior notice of any material change in the policy. A certificate of insurance with respect to a renewal policy shall be delivered to the Port Authority at least fifteen (15) days prior to the expiration date of each expiring policy, except for any policy expiring after the date of expiration of the effective period hereof. If at any time the policy required by this paragraph shall be or become unsatisfactory to the Port Authority as to form or substance, or if the carrier issuing such policy shall be or become unsatisfactory to the Port Authority, the Lessee shall promptly obtain a new and satisfactory policy in replacement.

The proceeds of insurance from coverages secured in accordance with this paragraph shall be made available to the Lessee and shall be applied by the Lessee strictly and solely to the repair, replacement, or rebuilding of the Premises as provided in this Agreement. The procedures for such rebuilding shall be the same as for the initial construction as set forth in Section 8. The Lessee shall not be entitled to any abatement of the rentals payable hereunder at any time by reason of such casualty.

(e) The Port Authority and the Lessee hereby stipulate that neither the provisions of Titles 46:8-6 and 46:8-7 of the Revised Statutes of New Jersey nor those of any other similar statute shall extend or apply to this Agreement.

(f) In the event of damage to or a partial or total destruction of the Premises, the Lessee shall within thirty (30) days after the occurrence commence to remove from the Premises or from the portion thereof destroyed, all damaged property (and all debris thereof) including damaged buildings and structures, and all damaged property belonging to the Lessee or to any third person whatsoever, and thereafter shall diligently continue such removal, and if the Lessee does not perform its obligation hereunder, the Port Authority may remove such debris and dispose of the same and may remove such property to a public warehouse for deposit or may retain the same in its own possession and sell the same at public auction, the proceeds of which shall be applied first to the expenses of removal, storage and sale, and second to any sums owed by the Lessee to the Port Authority, with any balance remaining to be paid to the Lessee; if the expenses of such removal, storage and sale shall exceed the proceeds of sale, the Lessee shall pay such excess to the Port Authority on demand. Without limiting any term or provision of this Agreement, the Lessee shall indemnify and save harmless the Port Authority, its officers, agents, employees, contractors and subcontractors, from and against any and all claims of third persons arising out of the exercise by the Port Authority of its right to remove property as hereinabove provided including all claims for conversion, all claims for damage or destruction of property, all claims for injuries to persons (including death), and all other claims for damages, consequential or otherwise.

Section 18. Assignment and Sublease

(a) The Lessee covenants and agrees that it will not sell, convey, transfer, assign, mortgage or pledge this Agreement or any part thereof, or any rights created thereby or the letting thereunder or any part thereof.

(b) The Lessee shall not sublet the Premises or any part thereof.

(c) If the Lessee assigns, sells, conveys, transfers, mortgages, pledges or sublets in violation of paragraphs (a) or (b) of this Section or if the Premises are occupied by any person, firm or corporation other than the Lessee, the Port Authority may collect rent from any assignee, sublessee, or anyone who claims a right to this Agreement or to the letting or who occupies the Premises, and shall apply the net amount collected to the rental herein reserved; and no such collection shall be deemed a waiver by the Port Authority of the covenants contained in paragraphs (a) and (b) of this Section, nor an acceptance by the Port Authority of any such assignee, sublessee, claimant or occupant as tenant, nor a release of the Lessee by the Port Authority from the further performance by the Lessee of the covenants contained in this Agreement.

(d) The Lessee further covenants and agrees that it will not use or permit any person whatsoever to use the Facility or any portion thereof for any purpose other than as provided in Section 8 of this Agreement.

Section 19. Condemnation

(a) In any action or other proceeding by any governmental agency or agencies for the taking for a public use of any interest in all or part of the Premises, or in case of any deed, lease or other conveyance in lieu thereof (all of which are in this Section referred to as "taking or conveyance"), the Lessee shall not be entitled to assert any claim to any compensation, award or part thereof made or to be made therein or therefor or any claim to any consideration or rental or any part thereof paid therefor, or to institute any action or proceeding or to assert any claim against such agency or agencies or against the Port Authority for any such taking or conveyance, except for the possible claim to an award for trade fixtures installed by the Lessee and/or an award for moving expenses if (i) such claim is then allowed by law and (ii) such award is made separate and apart from the award made or to be made to the Port Authority in such proceeding and any such award to the Lessee will not directly or indirectly reduce the amount of compensation payable to the Port Authority; it being understood and agreed between the parties hereto that the Port Authority shall be entitled to all compensation or awards made or to be made or paid, and all such consideration or rental, free of any claim or right of the Lessee.

(b) In the event that all or any portion of the Premises is required by the Port Authority to comply with any present or future governmental law, rule, regulation, requirement, order or direction, the Port Authority may by notice given to the Lessee terminate the letting with respect to

all or such portion of the Premises so required. Such termination shall be effective on the date specified in the notice. The Lessee hereby agrees to deliver possession of all or such portion of the Premises so required upon the effective date of such termination in the same condition as that required for the delivery of the Premises upon the date originally fixed by this Agreement for the expiration of the term of the letting. No taking by or conveyance to any governmental authority as described in paragraph (a) of this Section, nor any delivery by the Lessee nor taking by the Port Authority pursuant to this paragraph, shall be or be construed to be an eviction of the Lessee or a breach of this Agreement or be made the basis of any claim by the Lessee against the Port Authority for damages, consequential or otherwise.

(c) In the event that the taking or conveyance covers the entire Premises, or in the event that the letting is terminated with respect to the entire Premises pursuant to paragraph (b) of this Section, then this Agreement shall, as of the date possession is taken by such agency or agencies from the Port Authority, or as of the effective date of such termination, cease and determine in the same manner and with the same effect as if the said date were the original date of expiration hereof.

(d) In the event that the taking or conveyance covers a part only of the Premises, or in the event that the letting is terminated pursuant to paragraph (b) of this Section with respect to a part only of the Premises, then the letting as to such part shall, as of the date possession thereof is taken by such agency or agencies, or as of the effective date of such termination, cease and determine in the same manner and with the same effect as if the term of the letting had on that date expired.

(e) In the event that the taking or conveyance or the delivery by the Lessee or taking by the Port Authority pursuant to paragraph (b) of this Section results in a change of more than thirty percent (30%) (increase or decrease) of the ratio of the number of linear feet of wharf available to the Lessee (exclusive of the wharf adjacent to Berths 52 and 54) over the then number of acres constituting the Premises, then the Lessee shall have an option exercisable by notice given to the Port Authority within ten (10) days after such taking or conveyance to terminate the letting hereunder, as of the date of such taking, and such termination shall be effective as if the date of such taking were the original date of expiration hereof.

(g) On any taking, the various provisions providing for an adjustment of the rents payable hereunder as a result of a variation in the number of acres which actually constitutes

the Premises as compared to four hundred forty-five (445) acres shall apply.

(h) Notwithstanding any other provision hereof (including, but not limited to, the provisions of Section 5) in the event that Lessee is deprived of the effective use of any improvement made pursuant to Section 7 which constitutes Funded Work and for which Facility Construction Rental is being paid as provided in Section 5, then and in that event:

(i) If the taking is permanent, the Facility Construction Rental attributable to such improvement shall be forgiven. It is understood that the forgiving of the Facility Construction Rental pursuant to this paragraph shall constitute a discharge of such Facility Construction Rental and not a deferral thereof and for all other purposes hereof (including, but not limited to, the determination of the unamortized amount of any Funded Work) such Facility Construction Rental which is discharged pursuant to this paragraph shall be treated as if same had been paid.

(ii) If the taking is temporary, then during the period of time that Lessee is deprived of such use, the Facility Construction Rental attributable to such improvement shall be forgiven. It is understood that the forgiving of Facility Construction Rental pursuant to this paragraph shall constitute a discharge of each payment of Facility Construction Rental due during the period Lessee is deprived of such use and not a deferral thereof and for all other purposes hereof (including, but not limited to, the determination of the unamortized amount of any Funded Work) such Facility Construction Rental which is discharged pursuant to this paragraph shall be treated as if same had been paid.

Section 20. Other Construction by the Lessee

Except as may be otherwise expressly provided in Section 7, the Lessee shall not erect any structures, make any improvements or do any other construction work on the Premises or alter, modify or make additions, improvements or repairs to or replacements of, any structure now existing or built at any time during the letting, or install any fixtures without the prior consent of the Port Authority. In the event any construction, improvement, alteration, modification, addition, repair or replacement is made, with or without the Port Authority's consent, and unless the consent of the Port Authority shall expressly provide otherwise, the same shall immediately become the property of the Port Authority, and the Lessee shall have no right to remove the same either during the letting or at the expiration thereof unless the Port Authority, at any time prior to the expiration of the term of the letting,

or any extension or renewal thereof, shall give notice to the Lessee to remove the same, or to cause the same to be changed to the satisfaction of the Port Authority, in which case the Lessee agrees to remove the same, or change it in compliance with such notice. In case of any failure on the part of the Lessee to comply with such notice, the Port Authority may effect the removal or change, and the Lessee hereby agrees to pay the cost thereof to the Port Authority upon demand. Notwithstanding the foregoing or the provision of Sections 7 and 16 of this Agreement, the Lessee shall have no obligations to change, restore or remove any part or aspect of the Premises (hereinafter called the "Restoration Obligations")to the condition the same was in before the completion of any specific work item, unless at the time of approval of the Tenant Alteration Application and plans submitted by the Lessee, the Port Authority has specifically required such Restoration Obligations.

Section 21. Additional Rent and Charges

(a) If the Port Authority has paid any sum or sums or has incurred any obligations or expense which the Lessee has agreed to pay or reimburse the Port Authority for, or if the Port Authority is required or elects to pay any sum or sums or incurs any obligations or expense by reason of the failure, neglect or refusal of the Lessee to perform or fulfill any one or more of the conditions, covenants or agreements contained in this Agreement or as a result of an act or omission of the Lessee contrary to the said conditions, covenants and agreements, the Lessee shall pay to the Port Authority the sum or sums so paid or the expense so incurred, including all interest, costs, damages and penalties, and the same may be added to any installment of rent thereafter due hereunder, and each and every part of the same shall be and become additional rent, recoverable by the Port Authority in the same manner and with like remedies as if it were originally a part of any of the rentals set forth in this Agreement.

(b) For all purposes under this Section and in any suit, action or proceeding of any kind between the Port Authority and the Lessee, any receipt showing any payment of any sum or sums by the Port Authority for any work done or material furnished shall be prima facie evidence against the Lessee that the amount of such payment was necessary and reasonable. Should the Port Authority elect to use its operating and maintenance staff in performing any work and to charge the Lessee with the cost thereof, any time report of any employee of the Port Authority showing hours of work or labor allocated to such work, or any stock requisition of the Port Authority showing the issuance of materials for use in the performance thereof, shall

likewise be prima facie evidence against the Lessee that the amount of such charge was necessary and reasonable.

(c) The term "cost" as used in this Section 21 shall mean and include: (1) Payroll costs, including contributions to welfare plans, retirement plans, or the cost of participation in other pension plans or systems, insurance costs, sick-leave pay, holiday, vacation and authorized-absence pays; (2) Cost of materials and supplies used; (3) Payments to contractors; (4) Any other direct costs; and (5) 30% of the sum of the foregoing.

Section 22. Rights of Entry Reserved

(a) The Port Authority, by its officers, employees, agents, representatives and contractors shall have the right at all reasonable times to enter upon the Premises for the purpose of inspecting the same, for observing the performance by the Lessee of its obligations under this Agreement, and for the doing of any act or thing which the Port Authority may be obligated or have the right to do under this Agreement or otherwise.

(b) Without limiting the generality of the foregoing, the Port Authority, by its officers, employees, agents, representatives, and contractors, and on behalf of furnishers of utilities and other services, shall have the right, for its own benefit, for the benefit of the Lessee, or for the benefit of others than the Lessee at the Facility, to maintain existing and future utility, mechanical, electrical and other systems and to enter upon the Premises at all reasonable times to make such repairs, replacements or alterations as the Port Authority shall deem necessary or advisable and, from time to time, to construct or install over, in or under the Premises new systems or parts thereof, and to use the Premises for access to other parts of the Facility otherwise not conveniently accessible; provided, however that in the exercise of such rights of access, repair, alteration or new construction the Port Authority shall not unreasonably interfere with the use and occupancy of the Premises by the Lessee.

(c) In the event that any property of the Lessee shall obstruct the access of the Port Authority, its employees, agents or contractors to any of the existing or future utility, mechanical, electrical and other systems and thus shall interfere with the inspection, maintenance or repair of any such system, the Lessee shall move such property, as directed by the Port Authority, in order that the access may be had to the system or part thereof for its inspection, maintenance or repair, and, if the Lessee shall fail so to move such property after written direction from the Port Authority to do so, the

Port Authority may move it and the Lessee hereby agrees to pay the cost of such moving upon demand.

(d) Nothing in this Section shall impose, or shall be construed to impose upon the Port Authority any obligations so to construct or maintain or to make repairs, replacements, alterations or additions, or shall create any liability for any failure so to do. The Lessee is and shall be in exclusive control and possession of the Premises and the Port Authority shall not in any event be liable for any injury or damage to any property or to any person happening on or about the Premises or for any injury or damage to the Premises or to any property of the Lessee or of any other person located therein or thereon (other than those occasioned by the acts of the Port Authority).

(e) At any time and from time to time during ordinary business hours within the three (3) months next preceding the expiration of the letting, the Port Authority, by its agents and employees, whether or not accompanied by prospective lessees, occupiers or users of the Premises, shall have the right to enter thereon for the purpose of exhibiting and viewing all parts of the same, and during such three-month period the Port Authority may place and maintain on the Premises, the usual "To Let" signs, which signs the Lessee shall permit to remain without molestation.

(f) If, during the last month of the letting, the Lessee shall have removed all or substantially all its property from the Premises, the Port Authority may immediately enter and alter, renovate and redecorate the Premises.

(g) The exercise of any or all of the foregoing rights by the Port Authority or others shall not be or be construed to be an eviction of the Lessee nor be made the grounds for any abatement of rental nor any claim or demand for damages, consequential or otherwise.

Section 23. Limitation of Rights and Privileges Granted

(a) The Premises are let to the Lessee and the Lessee takes the same subject to all the following: (i) easements, restrictions, reservations, covenants and agreements, if any, to which the Premises may be subject; rights of the public in and to any public street; (ii) rights, if any, of any enterprise, public or private, which is engaged in furnishing heating, lighting, power, telegraph, telephone, steam, or transportation services and of the municipality and State in which the Premises are located; (iii) permits, licenses, regulations and restrictions, if any, of the United States the municipality or State in which the Premises are located, or other governmental authority.

(b) No greater rights or privileges with respect to the use of the Premises or any part thereof are granted or intended to be granted to the Lessee by this Agreement, or by any provision thereof, than the rights and privileges expressly and specifically granted.

(c) Nothing in this Agreement contained shall grant to the Lessee any rights whatsoever in the air space above the roof of any building or buildings or portion of any building or buildings, if any are included in the Premises (except to the extent required in either case for the performance of any of the obligations of the Lessee hereunder), or more than twenty (20) feet above the present ground level of any open area included in the Premises (except to the extent required for the placement of lights, utilities, the placement and operation of container cranes and other equipment on the Premises and the movement and storage of containers, chassis and other cargo). If any construction or installation is contemplated in this Agreement, the height thereof above ground shall be as determined solely by the Port Authority.

Section 24. Prohibited Acts

(a) The Lessee shall not do or permit to be done anything which may interfere with the effectiveness or accessibility of the drainage and sewerage system, water system, communications system, fuel system, electrical, fire-protection system, sprinkler system, alarm system, fire hydrants and hoses and other systems, if any, installed or located on, under, or in the Premises.

(b) The Lessee shall not dispose of nor permit any one to dispose of any waste material (whether liquid or solid) by means of the toilets, manholes, sanitary sewers or storm sewers in the Premises or on the Facility except after treatment in installations or equipment included in plans and specifications submitted to and approved by the Port Authority.

(c) The Lessee shall not operate any engine or any item of automotive equipment in any enclosed space on the Premises unless such space is adequately ventilated and unless such engine or item of automotive equipment is equipped with a proper spark arresting device which has been approved by the Port Authority.

(d) The Lessee shall not overload any floor and shall repair any floor, including supporting members, and any paved area damaged by overloading. Nothing in this paragraph (d) or elsewhere in this Agreement shall be or be construed to be a representation by the Port Authority of the weight any floor will bear.

(e) The Lessee shall not fuel or defuel its automotive vehicles or other equipment in the enclosed portions of the Premises without the prior approval of the Manager of the Facility.

(f) The Lessee shall not keep or store in the Premises, explosives, inflammable liquids or solids or oxidized materials or use any cleaning materials having a harmful corrosive effect on any part of the Premises.

(g) The Lessee shall not use or permit the use of any truss or structural supporting member of the building or roof or any part thereof for the storage of any material or equipment, or to hoist, lift, move or support any material or equipment or other weight or load, by means of said trusses or structural supporting members unless said trusses or structural supporting members are specifically designed for such use.

(h) The Lessee shall not fuel or defuel equipment in the enclosed portions of the Premises without prior approval of the Manager of the Facility.

(i) The Lessee shall not dispose of, release or discharge nor permit anyone to dispose of, release or discharge any Hazardous Substance on or from the Premises, and shall not dispose of, release or discharge or permit anyone subject to its control or authority to dispose of, release or discharge any Hazardous Substance at the Facility. Any Hazardous Substance disposed of, released or discharged by the Lessee (or permitted by the Lessee to be disposed of, released or discharged) on or from the Premises or at the Facility, shall upon notice by the Port Authority to the Lessee and subject to the provisions of Section 20 hereof, be completely removed, cleaned up and/or remediated by the Lessee. The obligations of the Lessee pursuant to this paragraph (i) shall survive the expiration or termination of this Agreement.

Section 25. Termination

(a) If any one or more of the following events shall occur, that is to say:

(1) The Lessee shall become insolvent, or shall take the benefit of any present or future insolvency statute, or shall make a general assignment for the benefit of creditors, or file a voluntary petition in bankruptcy or a petition or answer seeking an arrangement or its reorganization or the readjustment of its indebtedness under the federal bankruptcy laws or under any other law or statute of the United

States or of any State thereof, or consent to the appointment of a receiver, trustee, or liquidator of all or substantially all of its property; or

(2) By order or decree of a court the Lessee shall be adjudged bankrupt or an order shall be made approving a petition filed by any of its creditors or, if the Lessee is a corporation, by any of its stockholders, seeking its reorganization or the readjustment of its indebtedness under the federal bankruptcy laws or under any law or statute of the United States or of any State thereof; or

(3) A petition under any part of the federal bankruptcy laws or an action under any present or future insolvency law or statute shall be filed against the Lessee and shall not be dismissed within thirty (30) days after the filing thereof; or

(4) Except as otherwise provided by this Agreement, the letting or the interest of the Lessee under this Agreement shall be transferred to, pass to or devolve upon, by operation of law or otherwise, any other person, firm or corporation; or

(5) Except with respect to reorganizations satisfying the requirements of Section 368(a) of the Internal Revenue Code of 1986 and as otherwise provided by this Agreement, the Lessee shall, without the prior approval of the Port Authority, become a possessor or merged corporation in a merger, a constituent corporation in a consolidation, or a corporation in dissolution; or

(6) If the Lessee is a partnership, the said partnership shall be dissolved as the result of any act or omission of its partners or any of them, or by operation of law or the order or decree of any court having jurisdiction, or for any other reason whatsoever; or

(7) By or pursuant to, or under authority of any legislative act, resolution or rule, or any order or decree of any court or governmental board, agency or officer, a receiver, trustee, or liquidator shall take possession or control of all or substantially all of the property of the Lessee, and such possession or control shall

continue in effect for a period of fifteen (15) days; or

(8) The Lessee shall voluntarily abandon, desert or vacate the Premises or discontinue its operations at the Premises or at the Facility or, after exhausting or abandoning any right of further appeal, the Lessee shall be prevented for a period of forty-five (45) days by action of any governmental agency from conducting its operations on the Premises, regardless of the fault of the Lessee; or

(9) Any lien shall be filed against the Premises because of any act or omission of the Lessee and shall not be discharged or bonded within thirty (30) days; or

(10) The Lessee shall fail duly and punctually to pay the rental or to make any other payment required under this Agreement when due to the Port Authority; or

(11) The Lessee shall fail to keep, perform and observe each and every other promise, covenant and agreement set forth in this Agreement, on its part to be kept, performed or observed, within ten (10) days after its receipt of notice of default thereunder from the Port Authority (except where fulfillment of its obligation requires activity over a period of time, and the Lessee shall have commenced to perform whatever may be required for fulfillment within ten (10) days after receipt of notice, and continues such performance without interruption except for causes beyond its control);

then upon the occurrence of any such event or at any time thereafter during the continuance thereof, the Port Authority may by five (5) days' written notice terminate the letting and the rights of the Lessee under this Agreement, such termination to be effective upon the date specified in such notice. Such right of termination and the exercise thereof shall be and operate as a conditional limitation.

(b) If any of the events enumerated in paragraph (a) of this Section shall occur prior to the commencement of the letting, the Lessee shall not be entitled to enter into possession of the Premises, and the Port Authority, upon the occurrence of any such event, or at any time thereafter during the continuance thereof may, by twenty-four (24) hours' notice, cancel the interest of the Lessee under this Agreement, such

cancellation to be effective upon the date specified in such notice.

(c) No acceptance by the Port Authority of rentals, fees, charges or other payments in whole or in part for any period or periods after a default of any of the terms, covenants and conditions hereof to be performed, kept or observed by the Lessee shall be deemed a waiver of any right on the part of the Port Authority to terminate the letting. No waiver by the Port Authority of any default on the part of the Lessee in performance of any of the terms, covenants or conditions hereof to be performed, kept or observed by the Lessee shall be or be construed to be a waiver by the Port Authority of any other or subsequent default in performance of any of the said terms, covenants and conditions.

(d) The rights of termination described above shall be in addition to any other rights of termination provided in this Agreement and in addition to any rights and remedies that the Port Authority would have at law or in equity consequent upon any breach of this Agreement by the Lessee, and the exercise by the Port Authority of any right of termination shall be without prejudice to any other such rights and remedies.

Section 26. Right of Re-entry

The Port Authority shall, as an additional remedy upon the giving of a notice of termination as provided in Section 25 of this Agreement, have the right to re-enter the Premises and every part thereof upon the effective date of termination without further notice of any kind, and may regain and resume possession either with or without the institution of summary or other legal proceedings, or otherwise. Such re-entry, or regaining or resumption of possession, however, shall not in any manner affect, alter or diminish any of the obligations of the Lessee under this Agreement, and shall in no event constitute an acceptance of surrender.

Section 27. Waiver of Redemption

The Lessee hereby waives any and all rights to recover or regain possession of the Premises and all rights of redemption, granted by or under any present or future law in the event it is evicted or dispossessed for any cause, or in the event the Port Authority obtains possession of the Premises in any lawful manner.

Section 28. Survival of the Obligations of the Lessee

(a) In the event that the letting shall have been terminated in accordance with a notice of termination as provided in Section 25 of this Agreement, or the interest of the Lessee shall have been cancelled pursuant thereto, or in the

event that the Port Authority has re-entered, regained or resumed possession of the Premises in accordance with the provisions of Section 26 of this Agreement, all of the obligations of the Lessee under this Agreement shall survive such termination or cancellation, re-entry, regaining or resumption of possession and shall remain in full force and effect for the full term of the letting, as originally fixed in Section 2 hereof, and the amount or amounts of damages or deficiency shall become due and payable to the Port Authority to the same extent, at the same time or times and in the same manner as if no termination, cancellation, re-entry, regaining or resumption of possession has taken place. The Port Authority may maintain separate actions each month to recover the damage or deficiency then due, or at its option and at any time may sue to recover the full deficiency (less the proper discount) for the entire unexpired term.

(b) The amount or amounts of damages for the period of time subsequent to termination or cancellation (or re-entry, regaining or resumption of possession) shall be:

(1) the amount of all unfulfilled monetary obligations of the Lessee under this Agreement, including, without limitation thereto, all sums constituting additional rental under Section 21 of this Agreement, and all sums constituting the rentals under Section 3, Section 4, Section 5 and Section 42 of this Agreement, accrued prior to the effective date of termination, and the cost to and expenses of the Port Authority for fulfilling all other obligations of the Lessee which would have accrued or matured during the balance of the term or on the expiration date originally fixed or within a stated time after expiration or termination; and

(2) an amount equal to the cost and the expenses of the Port Authority in connection with the termination, cancellation, regaining, possession and restoring and reletting the Premises, the Port Authority's legal expenses and costs, and the Port Authority costs and expenses for the care and maintenance of the Premises during any period of vacancy, and any brokerage fees and commission in connection with any reletting; and

(3) on account of the Lessee's basic rental and Facility Rental obligations, an amount equal to the then present value of all basic rental and Facility Rental payable with respect to the Premises as provided for in this Agreement for the entire term following the effective date of termination, as originally fixed in this Agreement, less the amount thereof which may have

been actually paid to the Port Authority by the Lessee; and

(4) on account of the Lessee's obligations under this Agreement with respect to the Container Throughput Rental and the Minimum Rental, an amount equal to the amount of such rentals which would have been paid by the Lessee during the balance of the term if there had been no termination or cancellation or re-entry, regaining or resumption of possession (any of the foregoing in this subparagraph being called a "Termination"). Such amount shall be calculated in accordance with the following: the Tier 1 Rental Rate, the Tier 2 Rental Rate, and the Rent Guarantee Number (as said rates and number would have escalated in the Throughput Lease Years remaining in the term of letting at the time of the Termination) shall be applied respectively to the "annual number of the Tier 1 Number of Containers" and the "annual number of the Tier 2 Number of Containers," as defined below, and the result so obtained shall be multiplied by the number of full Throughput Lease Years remaining in the term of the letting at the time of the Termination. The "annual number of the Tier 1 Number of Containers" and the "annual number of the Tier 2 Number of Containers" shall be, respectively, the Tier 1 Number of Containers and the Tier 2 Number of Containers loaded onto or discharged from vessels berthing at the Premises during the last full Throughput Lease Year to occur prior to the Termination. In the event that the Termination shall be on other than the last day of a Throughput Lease Year, for purposes of calculating the rental due hereunder for the period from the day after the Termination through the end of the Throughput Lease Year in which the Termination shall occur, the Exemption Number, the Tier 1 Number of Containers, the Tier 2 Number of Containers, and the Rent Guarantee Number shall each be prorated for the period from the day after the Termination through the end of the Throughput Lease Year in which the Termination shall occur; and

(5) on account of the Lessee's obligations under this Agreement with respect to the Non-container Throughput Rental, an amount equal to the amount of such rental which would have been paid by the Lessee during the balance of the term if there had been no termination or cancellation or re-entry, regaining or resumption of possession (any of the foregoing in this subparagraph being called a "Termination"). Such amount shall be calculated in accordance with the following: the applicable charge per revenue ton prevailing at the time of Termination shall be

multiplied by the "average number of revenue tons per month" as defined below and the product so obtained shall in turn be multiplied by the number of full calendar months remaining in the term of the letting at the time of Termination. The "average number of revenue tons per month" shall be calculated by dividing the total number of revenue tons of Non-container Cargo loaded onto or discharged from vessels berthing at the Premises during the last full twelve months immediately preceding the Termination by twelve (12).

Section 29. Reletting by the Port Authority

The Port Authority, upon termination or cancellation pursuant to Section 25 of this Agreement, or upon any re-entry, regaining or resumption of possession pursuant to Section 26 of this Agreement, may occupy the Premises or may relet the Premises and shall have the right to permit any person, firm or corporation to enter upon the Premises and use the same. Such reletting may be of part only of the Premises or of the Premises, and for a period of time the same as or different from the balance of the Term hereunder remaining, and on terms and conditions the same as or different from those set forth in this Agreement. The Port Authority shall also, upon termination or cancellation pursuant to Section 25 of this Agreement, or upon re-entry, regaining or resumption of possession pursuant to Section 26 of this Agreement, have the right to repair and to make structural or other changes in the Premises, including changes which alter the character of the Premises and the suitability thereof for the purposes of the Lessee under this Agreement, without affecting, altering or diminishing the obligations of the Lessee hereunder. In the event either of any reletting or of any actual use and occupancy by the Port Authority (the mere right to use and occupy not being sufficient however) there shall be credited to the account of the Lessee against its survived obligations hereunder any net amount remaining after deducting from the amount actually received from any lessee, licensee, permittee or other occupier in connection with the use of the Premises (or portion thereof) during the balance of the Term as the same is originally stated in this Agreement, or from the market value of the occupancy of such portion of the Premises as the Port Authority may itself during such period actually use and occupy, all reasonable expenses, reasonable costs and reasonable disbursements incurred or paid by the Port Authority in connection therewith. Neither any such letting nor any such other use or occupancy shall be or be construed to be an acceptance of a surrender. It is understood by the Port Authority and the Lessee that the Port Authority has no obligation to relet the Premises or any portion thereof or to use or occupy the Premises or any portion thereof itself, except to the extent as may be required by law.

Section 30. Remedies to Be Nonexclusive

All remedies provided in this Agreement shall be deemed cumulative and additional and not in lieu of or exclusive of each other or of any other remedy available to the Port Authority at law or in equity, and neither the exercise of any remedy, nor any provision in this Agreement for a remedy or an indemnity shall prevent the exercise of any other remedy.

Section 31. Surrender

(a) The Lessee covenants and agrees to yield and deliver peaceably to the Port Authority possession of the Premises on the date of the cessation of the letting, whether such cessation be by termination, expiration or otherwise, promptly and in the condition required by the provisions of Sections 16 and 20 hereof regarding the condition of the Premises at the expiration or termination of the letting hereunder.

(b) Unless required for the performance by the Lessee of its obligations hereunder (in which event removal shall be permitted during the last two (2) months of the term hereof), the Lessee shall have the right at any time during the letting to remove from the Premises, all equipment, removable fixtures and other personal property to which it has title, and all property of third persons for which the Lessee is responsible, and on or before the expiration or earlier termination of the letting it shall remove all of the same from the Premises, repairing all damage caused by any removal. If the Lessee shall fail to remove such property on or before the termination or expiration of the letting, the Port Authority may remove such property to a public warehouse for deposit or may retain the same in its own possession and in either event may sell the same at public auction, the proceeds of which shall be applied: first to the expenses of removal, including repair required thereby, and of storage and sale; second, to any sums owed by the Lessee to the Port Authority, with any balance remaining to be paid to the Lessee; if the expenses of such removal, repair, storage and sale shall exceed the proceeds of sale, the Lessee shall pay such excess to the Port Authority upon demand. Without limiting any other term or provision of this Agreement, the Lessee shall indemnify and hold harmless the Port Authority, its Commissioners, officers, agents, employees and contractors from all claims of third persons arising out of the Port Authority's removal and disposition of property pursuant to this Section, including claims for conversion, claims for loss of or damage to property, claims for injury to persons (including death), and claims for any other damages, consequential or otherwise.

Section 32. Acceptance of Surrender of Lease

No agreement of surrender or to accept a surrender shall be valid unless and until the same shall have been reduced to writing and signed by the duly authorized representatives of the Port Authority and of the Lessee. Except as expressly provided in this Section, neither the doing of, nor any omission to do, any act or thing, shall be deemed an acceptance of a surrender of the letting or of this Agreement.

Section 33. Notices

(a) All notices, permissions, requests, consents and approvals given or required to be given to or by either the Port Authority or the Lessee, except as otherwise expressly provided herein, shall be in writing (which shall include a telegram when delivered to the telegraph company), and all such notices and requests shall be (i) personally delivered to the party or to the duly designated officer or representative of such party; or (ii) delivered to an office of such party, officer or representative during regular business hours; or (iii) delivered to the residence of such party, officer or representative at any time; or (iv) if directed to the Lessee, delivered to the Premises at any time; or (v) forwarded to such party, officer or representative at the office or residence address by registered or certified mail, or delivered to such party at such address by "Federal Express" or similar courier service. The Lessee shall designate an office within the Port of New York District and an officer or representative whose regular place of business is at such office. Until further notice, the Port Authority hereby designates its Executive Director, and the Lessee designates the person whose name appears on the first page of this Agreement as their respective officers or representatives upon whom notices and requests may be served, and the Port Authority designates its office at One World Trade Center, New York, New York 10048, and the Lessee designates its office, the address of which is set forth in Page 1 of this Agreement, as their respective offices where notices and requests may be served.

(b) If any notice is mailed or delivered, the giving of such notice shall be complete upon receipt or, in the event of a refusal by the addressee, upon the first tender of the notice to the addressee or at the permitted address. If any notice is sent by telegraph, the giving of such notice shall be complete upon receipt or, in the event of a refusal by the addressee, upon the first tender of the notice by the telegraph company to the addressee or at the address thereof.

Section 34. General

(a) Wherever in this Agreement the Lessee agrees or is required to do or has the right to do, any act or thing, the following shall apply:

(1) If the Lessee is a corporation, its obligations shall be performed by it and its rights shall be exercised only by its officers and employees; or

(2) If the Lessee is a partnership, its obligations shall be performed and its rights shall be exercised by its partners and employees only; or

(3) If the Lessee is an individual, his obligations shall be performed and his rights shall be exercised by himself and his employees only;

except that the Lessee may use contractors in the performance of its obligations to perform the Lessee's Construction Work, comply with Environmental Requirements, maintain and repair the Premises and the equipment thereon and to supply watching and stevedoring services, including, coopering, clerking, checking, and extra labor functions at the Facility or to assist it with (but not to be responsible for performing) any other of the Lessee's obligations under this Agreement, provided, that if separate contractors are engaged to perform any of the foregoing services nevertheless the active management, direction, administration, executive action and overhead functions involved in the operations of the Lessee shall all be performed at all times during the letting solely by the Lessee, its officers and employees, and provided, further, that the Lessee shall be fully responsible to the Port Authority for the acts and omissions of such contractors and their officers, agents, representatives, employees and persons on the Premises with their consent to the same extent as if the same were the employees of the Lessee. None of the provisions of this paragraph (a) shall be taken to alter, amend or diminish any obligation of the Lessee assumed in relation to its invitees, business visitors, agents, representatives, contractors, customers, guests, or other persons, firms or corporations doing business with it or using or on or at the Premises with its consent.

(b) If more than one individual or other legal entity is the Lessee under this Agreement, each and every obligation hereof shall be the joint and several obligation of each such individual or other legal entity.

(c) Unless otherwise stated in this Agreement, in its use of the Premises the Lessee shall act only for its own account and, without limiting the generality of the foregoing, shall not act as agent, representative, factor, broker,

Union County, Docket No. L-7065-56, in the case of The Port of New York Authority, plaintiff, vs. Edward J. Grassman, et als., defendants, the lands title to which was so conveyed having been described fully in the Second Amended Complaint filed in the said case on May 16, 1957; and shall include lands contiguous to the lands so described, within the County of Union, which may have been heretofore or may hereafter be acquired by the Port Authority to use for marine terminal purposes. The rights of the Port Authority in the Facility are those acquired by it pursuant to the order described in the preceding sentence, together with those which may be acquired by any subsequent order or orders, deed or deeds or other instruments transferring or assigning additional adjacent property. No greater rights are granted or intended to be granted to the Lessee hereunder than the Port Authority has power to grant under the orders, deeds, or other instruments, as the circumstances may require.

(k) In the event that obstruction lights are now or in the future shall be installed on the Premises, the Lessee agrees to furnish the Port Authority without charge, electricity for energizing such obstruction lights daily for a period commencing thirty (30) minutes before sunset and ending thirty (30) minutes after sunrise (as sunset and sunrise may vary from day to day throughout the year) and for such other periods as may be directed or requested by the Control Tower of Newark Airport.

(l) As used in this Agreement, "letting" shall include any extension of the letting under this Agreement, whether made by agreement or by operation of law, and "Manager of the Facility" or "Manager" shall mean the person or persons from time to time designated by the Port Authority to exercise the powers and functions vested in the said Manager or in the Superintendent of the Facility by this Agreement; but until further notice from the Port Authority to the Lessee, it shall mean the Manager (or the Acting Manager) Port Authority Marine Terminals-New Jersey for the time being, or his duly designated representative or representatives.

(m) No designation in this Agreement of any area as a street, highway, roadway or other comparable characterization, whether or not by name, shall be or be deemed to be an admission, recognition or acknowledgement of public or private rights in the area so designated, or as a dedication for or a consent to any public or private use of the same. All use in this Agreement of names and designations in connection with such areas is merely for the purpose of fixing geographical locations.

(n) So long as the Lessee shall pay all rentals provided for in this Agreement and shall observe and perform all the terms, covenants and conditions on the Lessee's part to be observed and performed under this Agreement, the Lessee may peaceably and quietly enjoy the Premises, during the term of the

letting, without hindrance or molestation by anyone claiming by, through or under the Port Authority as lessor hereunder or any successor lessor, subject, nevertheless, to the terms, covenants and conditions of this Agreement, it being understood that the Port Authority's liability as lessor hereunder shall obtain only so long as it remains the owner of the Premises. The provisions of this paragraph not be deemed to modify the rights expressly granted to the Port Authority to terminate this Agreement and/or exercise any other remedies which it may have in the event of a default by the Lessee in its obligations hereunder after giving by the Port Authority of any required notice and the expiration of any applicable cure period.

(o) Subject to the last sentence of this paragraph, this Agreement and the letting hereunder are and shall be subject and subordinate to all mortgages which may now or hereafter affect the Premises or the Facility, and to all renewals, modifications, consolidations, replacements and extensions thereof (a "Superior Mortgage"), and although the provisions of this Section shall be deemed to be self-operating and effective for all purposes without any further instrument on the part of the Lessee, the Lessee shall execute on demand and without expense to the Port Authority such further instruments confirmatory of the provisions of this Section as the Port Authority may request. The Port Authority agrees that it will execute and permit the Lessee to record a Memorandum of Lease or similar document to be prepared by the Lessee providing summary notice of the terms and conditions hereof. The foregoing subordination of the Lessee's interest under this Agreement shall be contingent upon the Port Authority obtaining from the holder of such Superior Mortgage an agreement to the effect that so long as the Lessee is not in default in payment and performance of its obligations under this Agreement beyond applicable notice and cure periods, Lessee's possession of the Premises shall not be disturbed by reason of a foreclosure of such Superior Mortgage.

(p) Without in any way limiting the obligations of the Lessee as elsewhere stated in this Agreement, the Lessee shall be liable to the Port Authority for any damage done to the Facility or to any part thereof, or to any property of the Port Authority thereon through any act or omission of those in charge of any one or more vessels, steamers, tugboats, barges, lighters, or other floating equipment, or highway or other vehicles, or other transportation equipment while the same are at, coming to or leaving the Premises, except for damages to the Facility (other than the Premises) caused by any one or more of such vessels, steamers, tugboats, barges, lighters, or other floating equipment, or highway or other vehicles, or other transportation equipment as may be coming to or leaving the Premises without previous knowledge on the part of the Lessee.

(q) The Lessee recognizes that height restrictions, due primarily to the proximity of Newark Airport to the Premises, now exist and that they may at any time be changed, including changes that make them more onerous and restrictive. The Lessee and all persons, firms and corporations using the Premises or any part thereof with the express or implied consent of the Lessee, shall at all times obey such height restrictions as may be posted from time to time or otherwise communicated to the Lessee by the Port Authority, whether or not through the Manager of the Facility.

(r) The Port Authority, for the benefit of itself and of others using the Facility with its consent, shall have the right of access and passage for vessels along, upon and across the waters of the berthing area or any part thereof, to the extent only that such right may be exercised without unreasonably interfering with the operations of the Lessee.

(s) Reference in this Agreement to the singular shall be meant to include reference to the plural and vice versa. Reference in this Agreement to the masculine gender shall be meant to include the female and neuter and vice versa. The definition ascribed to any term herein shall govern all uses of such term, including uses of such term prior to the appearance of the definition.

(t) In the event that two or more copies of this Agreement are executed by all of the parties hereto, each executed copy shall be deemed an original, but all shall collectively constitute the same instrument. In the event that two or more counterparts of this Agreement are executed all such counterparts shall collectively constitute the same instrument.

(u) All agreements and covenants herein contained are severable. In the event that any provision of this Agreement should be held to be unenforceable, the validity and enforceability of the remaining provisions hereof shall not be affected thereby. Any court (or arbitrator) construing this Agreement is expressly granted the authority to revise any invalid or unenforceable provision hereof in order to render same enforceable.

(v) This Agreement shall be governed in accordance with the laws of the State of New Jersey.

Section 35. <u>Premises</u>

(a) Except as provided in Paragraph (d), the Port Authority shall deliver the Premises to the Lessee in its presently existing "as is" condition. The Lessee agrees to and shall take the Premises in its "as is" condition and the Port Authority shall have no obligations under this Agreement for

finishing work or preparation of any portion of the Premises for the Lessee's use. The Lessee acknowledges that a portion of the Premises were previously leased by the Port Authority to the Lessee under the Lease EP-148. Notwithstanding the provisions set forth in the first two sentences of this paragraph, and without otherwise limiting the generality thereof, the Lessee agrees that its obligations under Section 16 and Section 31(a) of this Agreement shall include, without limitation, the delivery of such portion of the Premises to the Port Authority upon expiration or earlier termination of the letting hereunder in the condition set forth in Sections 16 and 20 of this Agreement.

(b) The Lessee acknowledges that it has not relied upon any representation or statement of the Port Authority or its Commissioners, officers, employees or agents as to the condition of the Premises or the suitability thereof for the operations permitted on the Premises by this Agreement. The Lessee, prior to the execution of this Agreement, has thoroughly examined the Premises as existing and has found the same to be suitable and satisfactory for the operations of the Lessee contemplated and permitted under this Agreement. Without limiting any obligation of the Lessee to commence operations under this Agreement at the time and in the manner stated elsewhere in this Agreement, the Lessee agrees that no portion of the Premises will be used initially or at any time during the letting which is in a condition unsafe or improper for the conduct of the operations of the Lessee, so that there is possibility of injury or damage to life or property, and the Lessee further agrees that before any use it will immediately correct any such unsafe or improper condition. The Lessee hereby further acknowledges that it has during the term of the Lease EP-148 performed repairs and construction and installed improvements on the premises, title to all of which it is hereby agreed has vested in the Port Authority. In the event that as of the commencement of the term of the letting under this Agreement, the Lessee shall not have kept any or all of the foregoing in good condition as required under the Lease EP-148, the Lessee shall place and keep the same in good condition as required under this Agreement.

Any liabilities or obligations which by the terms of the Lease EP-148, or letter agreements or permits thereunder to make alterations, mature at the expiration or termination of said lease, shall be deemed to survive and mature at the expiration or earlier termination of this Agreement.

(c) The Port Authority shall not be liable to the Lessee for injury or death to any person or persons whomsoever, or for damage to any property whatsoever at any time in the Premises or elsewhere at the Facility, including but not limited to any such injury, death or damage from falling material,

water, rain, hail, snow, gas, steam, or electricity, whether the same may leak into, or flow from any part of the Facility or from any other place or quarter.

(d) The Port Authority agrees that as part of its renovations to the new ExpressRail Facility that it shall demolish building 4000, including the portion on the Premises, and remove the resulting debris from the Premises.

Section 36. Force Majeure

(a) Neither the Port Authority nor the Lessee shall be liable for any failure, delay or interruption in performing its obligations hereunder due to causes or conditions beyond its control, including without limitation thereto, strikes, boycotts, picketing, slow-downs, work stoppages or labor troubles of any other type (whether affecting the Port Authority or its contractors, or subcontractors). Further, neither party shall be liable unless the failure, delay or interruption shall result from failure on the part of such party to use reasonable care to prevent or reasonable efforts to cure such failure, delay or interruption, provided, however, that this provision shall not apply to failures by the Lessee to pay the rentals specified hereunder, including additional rental, and shall not apply to any other charges or money payments.

(b) The Port Authority shall be under no obligation to supply any service or services if and to the extent and during any period that the supplying of any such service or services or the use of any component necessary therefor shall be prohibited or rationed by any federal, state or municipal law, rule, regulation, requirement, order or direction and if the Port Authority deems it in the public interest to comply therewith, even though such law, rule, regulation, requirement, order or direction may not be mandatory on the Port Authority as a public agency.

(c) No abatement, diminution of reduction of the rent or other charges payable by the Lessee, shall be claimed by or allowed to the Lessee for any inconvenience, interruption, cessation or loss of business or other loss caused, directly or indirectly, by any present or future law, rule, requirement, order, direction, ordinance or regulation of the United States of America, or of the state, county or city government, or of any other municipal, governmental or lawful authority whatsoever, or by priorities, rationing or curtailment of labor or materials, or by war or any matter or thing resulting therefrom, or by any other cause or causes beyond the control of the Port Authority, nor shall this Agreement be affected by any such causes.

Section 37. Brokerage

The Lessee represents and warrants that no broker has been concerned in the negotiation of this Agreement and that there is no broker who is or may be entitled to be paid a commission in connection therewith. The Lessee shall indemnify and save harmless the Port Authority of and from any and every claim for commission or brokerage made by any and all persons, firms or corporations whatsoever for services in connection with the negotiation and execution of this Agreement.

Section 38. Non-Liability of Individuals

Neither the Commissioners of the Port Authority nor any of them, nor any officer, agent or employee thereof shall be charged personally by the Lessee with any liability, or held liable to the Lessee under any term or provision of this Agreement, or because of its execution or attempted execution, or because of any breach or attempted or alleged breach, thereof.

Section 39. Services

(a) Except as provided in this Section 39, the Port Authority shall be under no obligation to supply the Lessee with any services provided by utility companies and other service providers, including but not limited to water, gas, electricity, sewer service, heat, steam, air-conditioning, telephone, telegraph, cable, or electrical guard or watch service.

(b) (1) The Lessee shall promptly pay all water and sewer charges both covering its own consumption and water delivered by the Lessee to vessels berthing at the Premises issued by the municipality or public utility supplying such water or the Port Authority, as the case may be.

(2) In the event the municipality or public utility is the direct provider of cold water and sewer service, the Lessee shall make arrangements with such entity for such service and pay bills directly to the provider for same. If any such bill or bills shall remain unpaid for a period of six (6) months after the same becomes due and payable, or in the event that such bill remains unpaid at the date of expiration or earlier termination of the letting under this Agreement, the Port Authority may pay the same and any interest or penalties thereon, and the total payment or payments shall constitute an item of additional rental, payable to the Port Authority on demand.

(3) In the event the Port Authority provides, furnishes and supplies to the Lessee cold water and sewer service, the Lessee shall pay water bill and sewer charges directly to the Port Authority. Such bills may include the cost to the Port Authority of supplying such water and sewer service

and an amount which shall be fifteen percent (15%) of the amount charged by the municipality or public utility including, but not limited to, costs for the purchase, supply, distribution, construction, maintenance and administration of water supply and sewer service. The charge therefor shall be payable by the Lessee when billed as additional rental in the same manner and with like remedies as for all other rental under this Agreement. The quantity of water consumed shall be measured by the meter or meters installed for the purpose or determined by survey, as the case may be; provided, however, that if for any reason, any meter or meters fail to record the consumption of water, the consumption during the period such meter or meters are out of service will be considered to be the same as the consumption for a like period immediately before or after the interruption, as elected by the Port Authority.

(c) The Lessee agrees to heat the enclosed portions of the Premises to a sufficient temperature, or to bleed pipes, so that the plumbing, fire-protection and sprinkler system, if any, will not be damaged by reason of low temperatures.

(d) If any federal, state, municipal or other governmental body, authority or agency, or any public utility or other entity providing any service, assesses, levies, imposes, makes or increases any charge, fee, rent or assessment on the Port Authority, for any service, system or utility now or in the future supplied to or available at the Premises or to any tenant, lessee, occupant or user thereof, or to the structures or buildings, which, or a portion or portions of which, are included in the Premises, the Lessee shall, at the option of the Port Authority exercised at any time and from time to time by notice to the Lessee, pay, in accordance with any such notice, such charge, fee, rent or assessment or such increase thereof (or the portion thereof allocated by the Port Authority to the Premises or to the operations of the Lessee under this Agreement) either directly to the governmental body, authority or agency, or to the public utility or other entity, or directly to the Port Authority, as such notice may direct. All such payments shall constitute items of additional rental.

(e) No failure, delay or interruption in any service or services, whether such service or services shall be supplied by the Port Authority or by others, shall relieve or be construed to relieve the Lessee of any of its obligations hereunder, or shall be or be construed to be an eviction of the Lessee, or shall constitute grounds for any diminution or abatement of the rental or rentals payable under this Agreement, or grounds for any claim by the Lessee for damages, consequential, or otherwise.

(f) Without in any wise affecting the obligations of the Lessee elsewhere stated in this Agreement, the Lessee shall, subject to the provisions of Section 16 of this Agreement, provide, maintain and keep in good order, condition and repair any and all meters (to be located as designated by the Port Authority, other governmental authority or utility), ship-filling lines and other water-using equipment and facilities.

Section 40. Security

(a) Upon the execution of this Agreement by the Lessee and delivery thereof to the Port Authority, the Lessee shall deposit with the Port Authority (and shall keep deposited throughout the letting under this Agreement) either the sum of One and a Half Million Dollars and No Cents ($1,500,000.00) in cash, or bonds of the United States of America, or of the State of New Jersey, or of the State of New York, or of The Port Authority of New York and New Jersey, having a market value of that amount, as security for the full, faithful and prompt performance of and compliance with, on the part of the Lessee, all of the terms, provisions, covenants and conditions of this Agreement on its part to be fulfilled, kept, performed or observed. Bonds qualifying for deposit hereunder shall be in bearer form but if bonds of that issue were offered only in registered form, then the Lessee may deposit such bond or bonds in registered form, provided, however, that the Port Authority shall be under no obligation to accept such deposit of a bond in registered form unless such bond has been re-registered in the name of the Port Authority (the expense of such re-registration to be borne by the Lessee) in a manner satisfactory to the Port Authority. The Lessee may request the Port Authority to accept a registered bond in the Lessee's name and if acceptable to the Port Authority the Lessee shall deposit such bond together with a bond power (and such other instruments or other documents as the Port Authority may require) in form and substance satisfactory to the Port Authority. In the event the deposit is returned to the Lessee any expenses incurred by the Port Authority in re-registering a bond to the name of the Lessee shall be borne by the Lessee. In addition to any and all other remedies available to it, the Port Authority shall have the right, at its option, at any time and from time to time, with or without notice, to use the deposit or any part thereof in whole or partial satisfaction of any of its claims or demands against the Lessee. There shall be no obligation on the Port Authority to exercise such right and neither the existence of such right nor the holding of the deposit itself shall cure any default or breach of this Agreement on the part of the Lessee. With respect to any bonds deposited by the Lessee, the Port Authority shall have the right, in order to satisfy any of its claims or demands against the Lessee, to sell the same in whole or in part, at any time and from time to time, with or without prior notice at public or private sale, all as determined by the Port

Authority, together with the right to purchase the same at such sale free of all claims, equities or rights or redemption of the Lessee. The Lessee hereby waives all right to participate therein and all right to prior notice or demand of the amount or amounts of the claims or demands of the Port Authority against the Lessee. The proceeds of every such sale shall be applied by the Port Authority first to the costs and expenses of the sale (including but not limited to advertising or commission expenses) and then to the amounts due the Port Authority from the Lessee. Any balance remaining shall be retained in cash toward bringing the deposit to the sum specified above. In the event that the Port Authority shall at any time or times so use the deposit, or any part thereof, or if bonds shall have been deposited and the market value thereof shall have declined below the above-mentioned amount, the Lessee shall, on demand of the Port Authority and within two (2) days thereafter, deposit with the Port Authority additional cash or bonds so as to maintain the deposit at all times to the full amount above stated, and such additional deposits shall be subject to all the conditions of this Section. After the expiration or earlier termination of the letting under this Agreement as the said letting may have been extended, and upon condition that the Lessee shall then be *in no wise in default under any part of this Agreement, as this* Agreement may have been amended or extended (or both), and upon written request therefor by the Lessee, the Port Authority will return the deposit to the Lessee less the amount of any and all unpaid claims and demands (including estimated damages) of the Port Authority by reason of any default or breach by the Lessee of this Agreement or any part thereof. The Lessee agrees that it will not assign or encumber the deposit. The Lessee may collect or receive any interest or income earned on bonds and interest paid on cash deposited in interest-bearing bank accounts, less any part thereof or amount which the Port Authority is or may hereafter be entitled or authorized by law to retain or to charge in connection therewith, whether as or in lieu of an administrative expense, or custodial charge, or otherwise; provided however, that the Port Authority shall not be obligated by this provision to place or to keep cash deposited hereunder in interest-bearing bank accounts.

(b) The Lessee may at any time during the term of the letting under this Agreement offer to deliver to the Port Authority, as security for all obligations of the Lessee under this Agreement, a clean irrevocable letter of credit issued by a banking institution satisfactory to the Port Authority and having its main office within the Port of New York District, in favor of the Port Authority in the amount of One and a Half Million Dollars and No Cents ($1,500,000.00). The form and terms of such letter of credit, as well as the institution issuing it, shall be subject to the prior and continuing approval of the Port Authority. Such letter of credit shall provide that it shall continue throughout the term of the

letting under this Agreement and for a period of not less than six (6) months thereafter; such continuance may be by provision for automatic renewal or by substitution of a subsequent satisfactory letter. Upon notice of cancellation of a letter of credit the Lessee agrees that unless, by a date twenty (20) days prior to the effective date of cancellation, the letter of credit is replaced by security in accordance with paragraph (a) of this Section or another letter of credit satisfactory to the Port Authority, the Port Authority may draw down the full amount thereof and thereafter the Port Authority will hold the same as security under paragraph (a) of this Section. Failure to provide such a letter of credit at any time during the term of the letting, valid and available to the Port Authority, including any failure of any banking institution issuing any such letter of credit previously accepted by the Port Authority to make one or more payments as may be provided in such letter of credit shall be deemed to be a breach of this Agreement on the part of the Lessee. Upon acceptance of such letter of credit by the Port Authority, and upon request by the Lessee made thereafter, the Port Authority will return the security deposit, if any, theretofore made under and in accordance with the provisions of paragraph (a) of this Section. The Lessee shall have the same rights to receive such deposit during the existence of a valid letter of credit as it would have to receive such sum upon expiration of the letting and fulfillment of the obligations of the Lessee under this Agreement. If the Port Authority shall make any drawing under a letter of credit held by the Port Authority hereunder, the Lessee, on demand of the Port Authority and within two (2) days thereafter, shall bring the letter of credit back up to its full amount.

(c) Notwithstanding the foregoing, the Lessee shall have the right to change its option as set forth in paragraphs (a) and (b) above from time to time but not more often than once every two years during the term of the letting under this Agreement.

(d) For purposes of the provisions set forth in this Section, the Lessee hereby certifies that its I.R.S. Employer Identification No. is 22-1465814.

Section 41. Approach Channel Depths

(a) For purposes of this Agreement, the term "Forty-five Foot Deepening" shall mean the following work to be performed by the United States Corps of Engineers (hereinafter called "the Corps") or such successor or other United States agency performing the present functions of the Corps: the completion of a channel of a depth of forty-five (45) feet below mean low water in the Kill Van Kull and the Newark Bay sufficient to allow passage of a single ship at one time to or

from portion or portions of the Berthing Area which has or have been deepened by the Lessee to forty-five (45) feet. The term "mean low water" as used in this paragraph shall mean mean low water as most recently at the time of execution of this Agreement determined by observations of the United States Coast and Geodetic Survey.

(b) For purposes of this Agreement, the term "Fifty Foot Deepening" shall mean the following work to be performed by the Corps or such successor or other United States agency performing the present functions of the Corps: the completion of a channel of a depth of fifty (50) feet below mean low water in the Kill Van Kull and the Newark Bay sufficient to allow passage of a single ship at one time to or from portion or portions of the Berthing Area which has or have been deepened by the Lessee to fifty (50) feet. The term "mean low water" as used in this paragraph shall mean mean low water as most recently at the time of execution of this Agreement determined by observations of the United States Coast and Geodetic Survey.

Section 42. Terminal Guarantee

(a) For purposes of this Agreement, the following terms shall have the meanings set forth below:

(1) "Terminal Lease Year" shall mean as the context requires the Lease Year commencing on the Terminal Lease Year Commencement Date and each Lease Year thereafter occurring during the term of the letting under this Agreement;

(2) "Terminal Lease Year Commencement Date" shall mean the later of the following: (i) January 1, 2008 or (ii) the first Lease Year following the completion of the Forty-five Foot Deepening (as defined in Section 41(a) hereof);

(3) "Rent Guarantee Number" shall mean the following: (i) six hundred fifty thousand (650,000) Qualified Containers for each Terminal Lease Year to occur during the First Terminal Guarantee Period, and (ii) seven hundred seventy-five thousand (775,000) Qualified Containers for each Terminal Lease Year to occur during the Second Terminal Guarantee Period and the Third Terminal Guarantee Period, subject to the Exemption Number contained in Section 4(a)(6) of this Agreement;

(4) "Terminal Guarantee Number" shall mean the following: (i) three hundred forty thousand (340,000) Qualified Containers for each Terminal Lease Year to occur during the First Terminal Guarantee Period, (ii) four hundred twenty thousand (420,000) Qualified Containers for each Terminal Lease Year to occur during the Second Terminal Guarantee Period; and (iii) nine hundred thousand (900,000) Qualified Containers for each Terminal Lease Year to occur during the Third Terminal

Guarantee Period; provided, however, that empty containers shall be included in the Terminal Guarantee Number only to the extent that they are transported to or from the Premises in the normal course of business which may include the loading or discharge of empty containers from vessels or voyages specifically dedicated to the movement of empty containers.

Whenever reference is made to a Rent Guarantee Number or a Terminal Guarantee Number such number shall be adjusted by operation of the proration provision contained in Section 3.A(c) of this Agreement.

(5) "First Terminal Guarantee Period" shall mean the period from the Terminal Lease Year Commencement Date through the day immediately preceding the first Lease Year following the completion of the Fifty Foot Deepening;

(6) "Second Terminal Guarantee Period" shall mean the period from the first day of the first Lease Year following the completion of the Fifty Foot Deepening through December 31, 2014; and

(7) "Third Terminal Guarantee Period" shall mean the period from January 1, 2015 through the expiration of the term of the letting under this Agreement.

(b) The Lessee shall pay a minimum rental (hereinafter called the "Minimum Rental") for each Terminal Lease Year in the following amounts: (1) for each Terminal Lease Year during the First Terminal Guarantee Period, the product obtained by multiplying (i) the Tier 1 Rental Rate for the equivalent Throughput Lease Year (as set forth in Schedule A attached hereto) by (ii) the Rent Guarantee Number for the First Terminal Guarantee Period; and (2) for each Terminal Lease Year during the Second Terminal Guarantee Period and the Third Terminal Guarantee Period, the product obtained by multiplying (i) the Tier 1 Rental Rate for the equivalent Throughput Lease Year (as set forth in Schedule A attached hereto) by (ii) the Rent Guarantee Number for the Second Terminal Guarantee Period. The Minimum Rental for each Terminal Lease Year shall be payable to the Port Authority in advance in equal monthly installments on the first day of each month to occur during such Terminal Lease Year.

(c) Notwithstanding any provision to the contrary contained in this Section, the Rent Guarantee Number of seven hundred seventy-five thousand (775,000) Qualified Containers, as set forth in subparagraph (3)(ii) of paragraph (a) of this Section 42, shall not be increased and shall remain at six hundred fifty thousand (650,000) Qualified containers for purposes of the calculation of the guaranteed rental so long as the Fifty Foot Dredging shall not have been completed. The

calculation of the guaranteed rental shall be made based on the six hundred fifty thousand (650,000) Qualified Containers until such time as the Fifty Foot Dredging is completed. Upon the completion thereof, the calculation of the next payable guaranteed rental shall reflect the Rent Guarantee Number of six hundred fifty thousand (650,000) Qualified Containers for any portion of the Throughput Lease Year preceding the completion of the Fifty Foot Dredging and shall reflect the Rent Guarantee number of seven hundred seventy-five thousand (775,000) Qualified Containers for any portion of the Throughput Lease Year following the completion thereof, unless the Fifty Foot Dredging shall be completed on the last day of the Throughput Lease Year, in which event the Rent Guarantee Number for the entire Throughput Lease Year in which the Fifty Foot Dredging next following the Throughput Lease Year in which the Fifty Foot Dredging shall be completed and thereafter during the Second Terminal Guarantee Period and the Third Terminal Guarantee period shall be seven hundred seventy-five thousand (775,000) Qualified Containers.

(d) In the event that for any two consecutive Terminal Lease Years to occur during the First Terminal Guarantee Period or the Second Terminal Guarantee Period, the number of Qualified Containers loaded onto or discharged from vessels berthing at the Premises shall be less than the Terminal Guarantee Number for the applicable Terminal Guarantee Period, the Port Authority shall have the right to terminate the letting under this Agreement. Termination under this subparagraph shall be effected by the Port Authority's giving the Lessee one (1) year's prior written notice at any time during the period from the first day following the end of the said second consecutive Terminal Lease Year through the one hundred eightieth (180th) day following the end of said second consecutive Terminal Lease Year; provided, however, that if the Lessee shall fail to submit to the Port Authority the certified statement required under Section 4(d) hereof for the end of the said second consecutive Terminal Lease Year within ninety (90) days of the date for the submission thereof and after notice of such failure is provided to Lessee, the parties agree that it shall be presumed that the Lessee's throughput is insufficient and that the termination right of the Port Authority under this subparagraph is in effect. Termination under the provisions of this subparagraph shall be governed by Section 25 hereof, and the Port Authority shall have the right to terminate the letting under this Agreement pursuant to the provisions of Section 25 hereof.

(e) In the event that for any three consecutive Terminal Lease Years to occur during the Third Terminal Guarantee Period, the number of Qualified Containers loaded onto or discharged from vessels berthing at the Premises shall be less than the Terminal Guarantee Number for the Third Terminal Guarantee Period, the Port Authority shall have the right to

terminate the letting under this Agreement. Termination under this subparagraph shall be effected by the Port Authority's giving the Lessee one (1) year's prior written notice at any time during the period from the first day following the end of the said third consecutive Terminal Lease Year through the one hundred eightieth (180th) day following the end of said third consecutive Terminal Lease Year; provided, however, that if the Lessee shall fail to submit to the Port Authority the certified statement required under Section 4(d) hereof for the end of the said third consecutive Terminal Lease Year within ninety (90) days of the date for the submission thereof, the parties agree that it shall be presumed that the Lessee's throughput is insufficient and that the termination right of the Port Authority under this subparagraph is in effect. Termination under the provisions of this subparagraph shall be governed by Section 25 hereof, and the Port Authority shall have the right to terminate the letting under this Agreement pursuant to the provisions of Section 25 hereof.

(f) Notwithstanding any provision to the contrary contained in this Section, the Terminal Guarantee Number of nine hundred thousand (900,000) Qualified Containers, as set forth in subparagraph (4)(iii) of paragraph (a) of this Section 42, shall not apply and shall remain at three hundred forty thousand (340,000) Qualified Containers so long as the Fifty Foot Dredging shall not have been completed.

Section 43. Records

(a) The Lessee shall maintain in accordance with accepted accounting practice during the term of the letting under this Agreement and for three years thereafter records and books of account (including, without limitation, bills of lading and manifests) recording all transactions in any way connected with or reflecting upon the payment of any rental by the Lessee pursuant to Sections 3, 4 or 5 hereof, and which records and books of account shall be kept at all times within the Port of New York District, as defined in the Port Compact of 1921 authorized by C. 154 Laws of N.Y. 1921 and C. 151 Laws of N.J. 1921, approved by Public Resolution No. 17 of the 67th Congress, First Session, and permit, in ordinary business hours during such time, the examination and audit by the officers, employees and representatives of the Port Authority of such records and books of account and also any of such records and books of account of any company which is owned or controlled by the Lessee, if said company performs services, similar to those performed by the Lessee, anywhere in the Port of New York District.

(b) Nothing contained in this Agreement shall be deemed to render any records, or any statement, of the Lessee required to be maintained or supplied hereunder conclusive as to

any of the matters set forth therein. The Port Authority may at its sole discretion, in lieu of any records or books of account or statements of the Lessee, employ its own records and books of account for the calculation of any amounts to be paid under this Agreement.

Section 44. Affirmative Action

(a) The Lessee shall not discriminate against employees or applicants for employment because of race, creed, color, national origin, sex, age, disability or marital status, and shall undertake or continue existing programs of affirmative action to ensure that minority group persons and women are afforded equal employment opportunity without discrimination. Such programs shall include, but not be limited to, recruitment, employment, job assignment, promotion, upgrading, demotion, transfer, layoff, termination, rates of pay or other forms of compensation, and selections for training or retraining, including apprenticeship and on-the-job training.

(b) In addition to and without limiting the foregoing and without limiting the provisions of Schedule E attached hereto and hereby made a part hereof, it is hereby agreed that the Lessee, in connection with its continuing operation, maintenance and repair of the Premises, or any portion thereof, and in connection with every award or agreement for concessions or consumer services at the Facility, shall throughout the term of the letting under this Agreement commit itself to and use good faith efforts to implement an extensive program of Affirmative Action, including specific affirmative action steps to be taken by the Lessee, to ensure maximum opportunities for employment and contracting by minorities and women. In meeting the said commitment the Lessee agrees to submit its said extensive Affirmative Action program, including the specific affirmative action steps to be taken by the Lessee to meet its aforesaid commitment, within sixty (60) days after the commencement of the term of the letting under this Agreement to the Port Authority for its review and approval. The Lessee shall incorporate in its said program such revisions and changes as the Port Authority and the Lessee may agree upon from time to time. The Lessee throughout the term of the letting under this Agreement shall document its efforts in implementing the said program, shall keep the Port Authority fully advised of the Lessee's progress in implementing the said program and shall supply to the Port Authority such information, data and documentation with respect thereto as the Port Authority may from time to time and at any time request, including but not limited to, annual reports. The obligations imposed on the Lessee under this Section shall not be construed to impose any greater requirements on the Lessee than those which are imposed on the Lessee under applicable law.

(c) "Minority" as used herein shall be as defined in paragraph II (c) of Part of Schedule E.

(d) In the implementation of this Section the Port Authority may consider compliance by the Lessee with the provisions of any federal, state or local law concerning affirmative action equal employment opportunity which are at least equal to the requirements of this Section, as effectuating the provisions of this Section. If the Port Authority determines that by virtue of such compliance with the provisions of any such federal, state or local law that the provisions hereof duplicate or conflict with such law the Port Authority may waive the applicability of the provisions of this Section to the extent that such duplication or conflict exists.

(e) Nothing herein provided shall be construed as a limitation upon the application of any laws which establish different standards of compliance or upon the application of requirements for the hiring of local or other area residents.

(f) Nothing in this Section shall grant or be deemed to grant to the Lessee the right to make any agreement or award for concessions or consumer services at the Facility.

Section 45. Right of Termination - Ownership and Control

(a) The Lessee represents, knowing that the Port Authority is relying on the accuracy of such representation, that it is a privately held corporation organized and existing under the laws of the State of New Jersey with shares of common stock par value per share, presently issued and outstanding, constituting all its issued and outstanding securities and that the following individuals are the owners of all its outstanding securities:

Name

M. Brian Maher
Basil Maher

The Lessee further represents that there are no other shares issued and outstanding, and that there are no other persons (which term shall include individuals, corporations, partnerships or other entities, hereinafter "Person" or "Persons") having a direct or indirect beneficial ownership of or in the Lessee.

(b) The Lessee recognizes the fact that a transfer of all of the securities in the Lessee or of a substantial part thereof, or any other act or transaction involving or resulting in a change in the ownership or distribution of such securities or with respect to the identity of the parties in control of the

Lessee, is for practical purposes a transfer or disposition of the rights obtained by the Lessee through this Agreement. The Lessee further recognizes that because of the nature of the obligations of the Lessee hereunder, the qualifications and identity of the Lessee and its security holders are of particular concern to the Port Authority. The Lessee also recognizes that it is because of such qualifications and identity that the Port Authority is entering into this Agreement and, in doing so, is willing to accept and rely on the Lessee for the faithful performance of all obligations and covenants hereunder. Therefore, the Lessee agrees that, without the prior written approval of the Port Authority, there shall be no transfer by any Person owning securities in the Lessee (an "Owner", which term shall be deemed to include successor Owner(s) of such securities or any part thereof or interest therein) to any other Person except those individuals whose names are listed above in paragraph (a) of this Section; nor shall any Owner suffer any transfer to be made; nor shall there be or be suffered to be by the Lessee or by any Owner of securities therein, any other change in the ownership of such securities, or with respect to the identity of the Persons in control of the Lessee, by any other method or means, whether by increased capitalization, merger with another corporation, corporate or other amendments, issuance of additional new securities or classification of securities or otherwise, provided, however, prior Port Authority approval as aforesaid shall not be required for transfer of any securities in the Lessee to one or more (individually or in combination) of the following: (u) by will or the laws of inheritance and distribution to any immediate family member of the Owner, (v) to any immediate family member of such Owner, (w) to a corporation, partnership or limited liability company the sole shareholders, partners or members of which are Owner(s) and immediate family members of Owner(s), (x) to a trust for the exclusive benefit of one or more permitted transferees as provided in this paragraph (b), (y) to an employee stock ownership plan of the Lessee established under Section 401(a) of the Internal Revenue Code of 1986, as amended (the "Code") or any successor provision thereto or (z) to any charitable organization qualified under Section 501(c)(3) of the Code or any successor provision thereto (collectively, with M. Brian Maher and Basil Maher, the "Permitted Transferees"). It is understood, however, that, except to transferees permitted pursuant to clauses (u) to (z) of this paragraph (b) or as provided in paragraphs (c), (d) or (j), any further transfer or transfers by the aforementioned transferee or transferees shall be subject to the conditions set forth in paragraphs (b), (d) or (e) of this Section, as applicable. "Immediate family member" shall mean any parent, descendant of any parent (by birth or adoption) or any spouse of any descendant.

(c) Notwithstanding the prohibition contained in paragraph (b) of this Section, during the period from the date of this Agreement to the day immediately preceding the twelfth anniversary of such date, the prior written approval of the Port Authority shall not be required with respect to a transfer or series of transfers of securities of the Lessee in the aggregate, of up to twenty percent (20%) of such securities to any other Person(s) other than Permitted Transferees, provided that, prior to such transfer pursuant to this paragraph (c), the proposed transferee or transferees shall make the certification and disclosures numbered (1) through (7) as set forth in subparagraph (iii) of paragraph (d).

(d) (i) Notwithstanding the prohibition on transfer of securities of the Lessee contained in paragraph (b) of this Section, commencing on the fifth anniversary of the date of this Agreement, the Port Authority's approval for transfers required by paragraph (b) of this Section shall not be unreasonably withheld so long as such transfers comply with all of the conditions set forth in subparagraphs (ii) and (iii) of this paragraph.

(ii) All transferees of transfers pursuant to the foregoing subparagraph (d)(i) shall, at the time of transfer,

(1) be a major steamship carrier or major public stevedore; and

(2) have an existing tangible net worth as of the end of its most current completed fiscal year, determined from the financial statements referenced in subparagraph (3) below ("Net Worth") of at least $75 million, which amount shall be increased at the rate of two percent (2%) per annum, compounded annually, commencing on the sixth anniversary of this Agreement, and on each anniversary date thereafter throughout the term of this Agreement; and

(3) have had positive net income in the steamship and/or stevedoring business during the five (5) years immediately preceding the year in which the transfer(s) is or are to occur, as determined in accordance with accepted accounting practices in the country in which such transferee(s) has or have its or their principal office(s) and evidenced by financial statements with appropriate certifications by the auditors of the transferee(s) copies of which shall be made available to the Port Authority for its inspection; and

(4) comply with the provisions of subparagraph (iv); and

(5) not be an existing terminal operator at the Port of New York and New Jersey which (a) handled on average

twenty-five percent (25%) or more container volume at the Port of New York and New Jersey during each of the two (2) years immediately preceding each of such transfer or transfers or (b) would have under its control, as a result of such transfer, a total of forty-five percent (45%) or more of the total container terminal acreage (including, whether or not such transfer confers a controlling interest in the Lessee, the Premises under this Agreement) in the Port of New York and New Jersey; and

(6) make the certification and disclosures provided in the following subparagraph (iii).

(iii) The proposed transferee shall, with respect to itself and each officer that would constitute an "executive officer" pursuant to Rule 3(b)(7) of the Securities and Exchange Act of 1934, as amended or any successor thereto (whether or not the proposed transferee is actually subject to such rule), each director and each Affiliate of the proposed transferee, and each beneficial owner of a fifteen percent (15%) or more interest in the proposed transferee (a "15% Owner") (other than any 15% Owner that is a public company that does not actually control the proposed transferee) (the proposed transferee and any such officer, director, Affiliate (as hereinafter defined) or 15% Owner, being hereinafter referred to as "It") make the certification and disclosures numbered (1) through (7) below.

(1) disclose every name, trade name or abbreviated name or federal taxpayer identification number ever used by It;

(2) certify that currently It is not suspended, debarred, found not responsible or otherwise disqualified from entering into any contract with any governmental agency or been denied a government contract for failure to meet standards related to integrity; and disclose whether, within the five (5) years preceding the date of the disclosure, It has been suspended, debarred, found not responsible or otherwise disqualified from entering into any contract with any governmental agency or been denied a government contract for failure to meet standards related to integrity;

(3) disclose whether within the five (5) years preceding the date of the disclosure It has had a contract terminated by any governmental agency for breach of contract or for any cause based in whole or in part on indictment or conviction;

(4) disclose whether within the five (5) years preceding the date of the disclosure It has had any business or professional license suspended or revoked or had any sanction imposed as a result of any judicial or administrative

proceeding with respect to any license held or with respect to any violation of a federal, state or local environmental law, rule or regulation;

(5) disclose whether within the twenty-five (25) years preceding the date of the disclosure It has ever had any sanction imposed as a result of a judicial or administrative proceeding related to material fraud (and within the preceding ten (10) years, with respect to fraud that is not material), extortion, bribery, bid rigging, embezzlement, material misrepresentation or material antitrust violation regardless of the dollar amount of the sanctions or the date of their imposition;

(6) disclose whether It is currently the subject of a criminal investigation by any federal, state or local prosecuting or investigative agency; and

(7) disclose whether It has within the five (5) years preceding the date of the disclosure been indicted or convicted of any crime or material offense in any jurisdiction.

(iv) The parties hereto recognize that, pursuant to the Waterfront Commission Act and the Regulations promulgated by the Waterfront Commission with respect thereto, licensed stevedores, such as Lessee, are required to provide the Waterfront Commission with the name of any person or entity which shall acquire five percent (5%) or more of the stock of the licensee and that the Waterfront Commission has the right to revoke or suspend the stevedore's license if any such person or entity would have disqualified the licensee from receiving a license upon original application. Accordingly, as an additional requirement to obtain the reasonable consent of the Port Authority as provided in subparagraph (ii) above, the Lessee agrees, no less than sixty (60) days prior to the transfer, to: (x) provide the Waterfront Commission with the name(s) of the proposed transferee(s); (y) cause the proposed transferee(s) to file with the Waterfront Commission a *Personal Information Supplement to Application for Stevedore License* (or such other form as the Waterfront Commission may specify at that time); and (z) request the Waterfront Commission to indicate, in writing, that it does not anticipate that it would take action to revoke or suspend the Lessee's stevedore license as a result of the transfer.

(e) (i) In the event, as a result of a transfer or series of transfers pursuant to paragraph (c), paragraph (d) or paragraph (j) (but specifically excepting transfers to Permitted Transferees), a transferee or transferees has or have direct or indirect ownership of thirty percent (30%) or more of the securities of the Lessee, then the Terminal Guarantee Number as provided in Section 42 entitled Terminal Guarantee, shall be

increased from 775,000 Qualified Containers to 825,000 Qualified Containers with respect to all lease years following the latter of the Lease Year in which such event shall have occurred or the Lease Year in which the availability of the beneficial use of the approach channels to 50' MLW in the Kill van Kull and Newark Bay shall have occurred.

(ii) In the event, as a result of a transfer or series of transfers pursuant to paragraph (c) or paragraph (d), any Person (other than Permitted Transferees) has control of the Lessee, the Port Authority shall have the right to increase the security deposit up to three months' rent based on the full rental obligation under this Agreement.

(f) The Lessee agrees that no later than ninety (90) days before the date of closing of any transfer set forth in paragraph (d) above, it shall give prior written notice of such proposed transfer(s) to the Port Authority, furnish a complete statement, subscribed and sworn to by the President or other executive officer of the Lessee, setting forth all disclosures and certifications by each transferee specified in subparagraph (d) above. In addition, the Lessee shall promptly furnish all additional information in connection with such transfer as the Port Authority may reasonably request from time to time.

(g) The Lessee acknowledges that the Lessee's assurance of faithful performance of these provisions is a special inducement for the Port Authority to enter into this Agreement. Noncompliance on the part of the Lessee with the provisions contained in this Section 45, in whole or in part, shall be and be deemed an event of default under Section 25 of this Agreement, and the Port Authority shall have the right to terminate this Agreement and the letting hereunder pursuant to the provisions of said Section 25 hereof.

(h) The foregoing right of termination shall be in addition to all other rights of termination the Port Authority has under this Agreement and the failure of the Port Authority to exercise its right of termination under this Section at any time in which it may have such right shall not affect, waive or limit its right to exercise such right of termination at any subsequent time.

(i) The phrase "direct or indirect beneficial ownership" shall include, without limiting the generality thereof, the direct or indirect power through contract, arrangement, understanding, relationship or otherwise to dispose of or to direct the disposal of, or to vote or to direct the voting of, any security of any entity.

(j) (1) Paragraph (b) of this Section shall not apply and the approval of the Port Authority shall not be

required for any transfer of securities of the Lessee by way of a primary or secondary public offering. It is hereby expressly agreed that in the event the Lessee proposes to make an initial public offering of its securities, the Lessee, promptly and no later than twenty (20) days after the prospectus or documents or forms filed with the Securities and Exchange Commission or any successor or substitute body ("SEC") become available for public inspection, shall submit to the Port Authority true and complete copies of such prospectus and other such documents and forms filed with the SEC. The provisions of paragraph (e) shall apply with full force and effect to transfers made by the Lessee pursuant to this paragraph (j). It is understood and agreed that, subject to the further provisions of this paragraph (j), paragraph (b) of this Section and the Port Authority's right to terminate this Agreement and the letting hereunder as described in paragraph (g) of this Section shall not apply in the event the Lessee becomes a publicly owned entity (as defined in subparagraph (k)(2) below).

(2) In the event the Lessee shall at any time be or become a publicly owned entity, and any Person (other than (x) a Permitted Transferee, or (y) any successor owner otherwise permitted by this Section (collectively, an "Approved Owner") shall be or become a direct or indirect beneficial owner of fifteen percent (15%) of the securities of such entity unless (A) one or more Approved Owners shall control more than fifty percent (50%) of the voting power of the securities of the Lessee, (B) such fifteen percent (15%) holder shall itself be a publicly owned entity or (C) the Port Authority shall have given its written consent thereto, then upon the occurrence of any such event or at any time thereafter during the continuance thereof the Port Authority shall have the right to terminate this Agreement and the letting hereunder pursuant to the provisions of Section 25 hereof.

(k) (1) The term "security" shall include any stock, any bond which carries voting rights, or rights or options to subscribe to, purchase, convert or transfer into or otherwise acquire equity securities, or any other obligation of a corporation the holder of which has any voting rights including but not limited to the right to vote for the election of members of the board of directors of said corporation and shall include any security convertible into a voting security and any right, option or warrant to subscribe to or purchase a voting security.

(2) A "publicly owned entity" shall be and mean one that has any class of securities subject to the registration requirements of the Securities Exchange Act of 1934, or any successor or substitute therefor.

(3) "Affiliate" shall mean any Person that directly or indirectly through one or more intermediaries,

controls or is controlled by or is under control with the specified Person. The term "control" (including the terms controlling, controlled by and under common control with) means the possession, direct or indirect, of the power to direct or cause the direction of the management and policies of a Person, whether through the ownership of existing securities, by contract or otherwise; provided that, in any event, any Person which owns fifteen percent (15%) or more of the securities having ordinary voting power for the election of directors or other governing body of a corporation or fifteen percent (15%) or more of the partnership or other ownership interests of any other person shall be deemed to control such corporation or such other person.

Section 46. Tax Election

(a) Attached hereto as Exhibit Y is a form of election pursuant to Section 142(b) of the Internal Revenue Code of 1986, as amended. The Lessee acknowledges that two counterparts of said form of election have been delivered to it by the Port Authority. Upon the execution of this Agreement by the Lessee and its delivery to the Port Authority, the Lessee shall execute the said two counterparts and deliver one fully executed counterpart to the Port Authority with its delivery of this Agreement, and the Lessee shall keep the second executed counterpart with its records for the balance of the entire term of the letting under this Agreement.

(b) The Lessee is not acquiring an ownership interest in the Premises defined in Section 1 of this Agreement. Capital expenditures in connection with the Premises have been, or are expected to be made, in whole or in part by the Port Authority from "exempt facility bonds" (within the meaning of Section 142(a) of the Internal Revenue Code of 1986) issued by the Port Authority from time to time (such capital expenditures are hereinafter called "the Property"). The Lessee hereby irrevocably elects not to claim for purposes of federal, state or local taxation of income any depreciation or investment credits, for which it may be eligible with respect to the Property. The Lessee further agrees that this irrevocable election shall be binding upon its successors in interest, if any, under this Agreement, and as a condition of any permitted sale or assignment of the interest of the Lessee under this Agreement, every successor in interest shall furnish an executed irrevocable election in the form of the immediately preceding sentence to the Port Authority. The foregoing shall not grant or be deemed to grant to the Lessee the right to sell or assign, in any manner, its interest under this Agreement.

(c) In the event the Lessee records any documents in lieu of recording this Agreement, such documents shall incorporate the substance of paragraph (b) of this Section.

(d) It is understood that the election set forth in paragraph (b) of this Section shall not apply to any personal property of the Lessee (including equipment and trade fixtures) removable without material damage to the Premises leased to the Lessee pursuant to this Agreement which are installed by the Lessee in or on the Premises leased to the Lessee pursuant to this Agreement and which shall be deemed to be and remain the property of the Lessee.

Section 47. Late Charges

If the Lessee should fail to pay any amount required under this Agreement when due to the Port Authority, including without limitation any payment of rental or any payment of utility fees or charges, or other charges or fees, or if any such amount is found to be due as the result of an audit, then, in such event, the Port Authority may impose (by statement, bill or otherwise) a late charge with respect to each such unpaid amount for each late charge period hereinbelow described during the entirety of which such amount remains unpaid, each such late charge not to exceed an amount equal to eight-tenths of one percent of such unpaid amount for each late charge period. There shall be twenty-four late charge periods during each calendar year; each late charge period shall be for a period of at least fifteen (15) calendar days except one late charge period each calendar year may be for a period of less than fifteen (but not less than thirteen) calendar days. Without limiting the generality of the foregoing, late charge periods in the case of amounts found to have been owing to the Port Authority as the result of Port Authority audit findings shall consist of each late charge period following the date the unpaid amount should have been paid under this Agreement. Each late charge shall be payable immediately upon demand made at any time there for by the Port Authority. No acceptance by the Port Authority of payment of any unpaid amount or of any unpaid late charge amount shall be deemed a waiver of the right of the Port Authority to payment of any late charge or late charges payable under the provisions of this Section, with respect to such unpaid amount. Each late charge shall be and become additional rent, recoverable by the Port Authority in the same manner and with like remedies as if it were originally a part of the rentals as set forth in this Agreement. Nothing in this Section is intended to, or shall be deemed to, affect, alter, modify or diminish in any way (i) any rights of the Port Authority under this Agreement, including without limitation the Port Authority's rights set forth in Section 25 of this Agreement entitled "Termination" or (ii) any obligations of the Lessee under this Agreement. In the event that any late charge imposed pursuant to this Section shall exceed a legal maximum applicable to such late charge, then, in such event, each such late charge payable under this Agreement shall be payable instead at such legal maximum.

Section 48. First Point of Rest Space

(a) The Lessee acknowledges and agrees, as a special inducement to the Port Authority to enter into this Agreement, that the Lessee shall make available a ship berth and upland area for the purpose of receiving and loading automobiles and other motor vehicles carried as waterborne cargo, as follows:

(i) Upon 48 hours' advance notice from any motor vehicle processor operating a motor vehicle processing facility located at the Elizabeth-Port Authority Marine Terminal, the Lessee shall make available Berth 52 as shown in diagonal hatching on Exhibit A-4 attached hereto and hereby made a part hereof and the open area upland of Berth 52 of approximately ten (10) acres as shown in diagonal cross hatching on Exhibit A-4 (hereinafter collectively called the "First Rest Space"), for berthing of vessels for the loading and unloading of automobiles and other motor vehicles and use as a first point of rest for such automobiles and other motor vehicles that are destined for dispatch or processing by such motor vehicle processor.

(ii) Motor vehicle processors using the First Rest Space, their employees, representatives and agents shall have the right of ingress and egress on and across the Premises between the First Rest Space and the city streets and/or Marine Terminal highways outside the Premises.

(iii) The Lessee agrees it will charge motor vehicle processors using the First Rest Space dockage and wharfage charges and that such charges shall be at no more than the rates as set forth in the Port Authority's tariff, as incorporated in FMC Schedule PA-10, as the same or any successor tariff may be amended from time to time.

(b) (i) The Lessee further acknowledges and agrees that in the event the Lessee fails to comply with the provisions of paragraph (a) of this Section 48 and after receipt of notice of non-compliance by the Lessee and failure of the Lessee to cure such non-compliance within ten (10) days of receipt of such notice, as the sole remedy of the Port Authority, the Port Authority shall have the right to separately terminate the letting hereunder with respect to the First Rest Space on five (5) days' advance written notice to the Lessee. In the event of termination pursuant hereto, the letting with respect to the First Rest Space shall cease and expire on the effective date of termination set forth in said notice with the same force and effect as if such date were the expiration date of this Agreement with respect thereto. Such termination shall not relieve the Lessee of any liabilities or obligations which shall

have accrued on or prior to the effective date of termination or which shall mature on such date.

(ii) The Lessee agrees that in the event of termination pursuant to the provisions of subparagraph (i) hereof, motor vehicle processors using the First Rest Space, their employees, representatives and agents shall have the right of ingress and egress on and across the Premises between the First Rest Space and the intersection of North Fleet Street and Aruba Street.

(c) Notwithstanding the foregoing provisions of this Section 48, it is agreed as follows:

(i) This Section 48 shall lapse and become null and void in the event that either: (x) no motor vehicle processing facility located at the Elizabeth-Port Authority Marine Terminal for a period of more than one (1) year; or (y) the First Place of Rest Space is not used by such a motor vehicle processor as a first place of rest for vehicles stevedored at Berth 52 for a period of more than one (1) year.

(ii) The right of any motor vehicle processor to use the First Place of Rest Space as provided in this Section 48 shall be subject to such motor vehicle processor entering into an agreement reasonably satisfactory to the Lessee which would specify commercially reasonable insurance and prompt payment of dockage and wharfage charges.

Section 49. Entire Agreement

The within Agreement consists of the following: Sections number 1 through 49, Schedules A, E and I, and Exhibits A, A-1, A-2, A-3, A-4, Y and I. It constitutes the entire agreement between the Port Authority and the Lessee on the subject matter, and may not be changed, modified, discharged or extended, except by written instrument duly executed on behalf of both the Port Authority and the Lessee. The Lessee agrees that no representations or warranties shall be binding upon the Port Authority unless expressed in writing in this Agreement.

IN WITNESS WHEREOF, the Port Authority and the Lessee have executed this Agreement as of the date first above written.

ATTEST:

Secretary

THE PORT AUTHORITY OF NEW YORK AND NEW JERSEY

By

(Title) Asst. Exec. Director

(seal)

ATTEST:

Secretary

MAHER TERMINALS, INC.

By:

M. Brian Maher
Chairman and
Chief Executive Officer
(seal)

APPROVED:

FORM	TERMS
PDN	

SCHEDULE A

LEASE YEAR BEGINNING	TIER 1 RENTAL RATE (356,001 TO 980,000)	TIER 2 RENTAL RATE (980,001 AND ABOVE)
Prior to October 1, 2008	$ 0.00	$ 0.00
October 1, 2008	$ 5.67	$ 4.25
October 1, 2009	$12.67	$ 9.25
October 1, 2010	$19.00	$14.25
October 1, 2011	$19.00	$14.25
October 1, 2012	$21.00	$15.75
October 1, 2013	$21.00	$15.75
October 1, 2014	$21.00	$15.75
October 1, 2015	$23.00	$17.25
October 1, 2016	$23.00	$17.25
October 1, 2017	$23.00	$17.25
October 1, 2018	$25.00	$18.75
October 1, 2019	$25.00	$18.75
October 1, 2020	$25.00	$18.75
October 1, 2021	$27.00	$20.25
October 1, 2022	$27.00	$20.25
October 1, 2023	$27.00	$20.25
October 1, 2024	$29.00	$21.75
October 1, 2025	$29.00	$21.75
October 1, 2026	$29.00	$21.75
October 1, 2027	$31.00	$23.25
October 1, 2028	$31.00	$23.25
October 1, 2029	$31.00	$23.25

SCHEDULE E

AFFIRMATIVE ACTION-EQUAL OPPORTUNITY---MINORITY BUSINESS ENTERPRISES---WOMEN-OWNED BUSINESS ENTERPRISES REQUIREMENTS

PART I. Affirmative Action Guidelines - Equal Employment Opportunity

I. The Port Authority and the Lessee hereby agree that the Lessee shall and that the Lessee shall require any Contractor, as hereinafter defined, to comply with the provisions set forth hereinafter in this Schedule E. The provisions set forth in this Part I are similar to the conditions for bidding on federal government contracts adopted by the Office of Federal Contract Compliance and effective May 8, 1978.

The Lessee as well as each bidder, contractor and subcontractor of the Lessee and each subcontractor of a contractor at any tier of construction (herein collectively referred to as "the Contractor") must fully comply with the following conditions set forth herein as to each construction trade to be used on construction work or any portion thereof (said conditions being herein called "Bid Conditions"). The Lessee hereby commits itself to the goals for minority and female utilization set forth below and all other requirements, terms and conditions of the Bid Conditions. The Lessee shall likewise require the Contractor to commit itself to the said goals for minority and female utilization set forth below and all other requirements, terms and conditions of the Bid Conditions by submitting a properly signed bid.

II. The Lessee and the Contractor shall each appoint an executive of its company to assume the responsibility for the implementation of the requirements, terms and conditions of the following Bid Conditions:

(a) The goals for minority and female participation, expressed in percentage terms for the Contractor's aggregate workforce in each trade on all construction work are as follows:

(1) Minority participation:

-Skilled trades	30%
-Laborers	40%

(2) Female participation:

-Skilled trades	6.9%
-Laborers	6.9%

These goals are applicable to all the Contractor's construction work performed in and for the premises.

The Contractor's specific affirmative action obligations required herein of minority and female employment and training must be substantially uniform throughout the length of the contract, and in each trade, and the Contractor shall make good faith efforts to employ minorities and women evenly on each of its projects. The transfer of minority or female employees or trainees from contractor to contractor or from project to project for the sole purpose of meeting the Contractor's goals shall be a violation of the contract. Compliance with the goals will be measured against the total work hours performed.

(b) The Contractor shall provide written notification to the Lessee and the Lessee shall provide written notification to the Manager of the Office of Business and Job Opportunity of the Port Authority within 10 working days of award of any construction subcontract in excess of $10,000 at any tier for construction work. The notification shall list the name, address and telephone number of the subcontractor; employer identification number; estimated starting and completion dates of the subcontract; and the geographical area in which the subcontract is to be performed.

(c) As used in these specifications:

(1) "Employer identification number" means the Federal Social Security number used on the Employer's Quarterly Federal Tax Return, U.S. Treasury Department Form 941;

(2) "Minority" includes:

(i) Black (all persons having origins in any of the Black African racial groups not of Hispanic origin);

(ii) Hispanic (all persons of Mexican, Puerto Rican, Dominican, Cuban, Central or South American culture or origin, regardless of race);

(iii) Asian and Pacific Islander (all persons having origins in any of the original peoples of the Far East, Southeast Asia, the Indian Subcontinent, or the Pacific Islands); and

(iv) American Indian or Alaskan Native (all persons having origins in any of the original peoples of North America and maintaining identifiable tribal

affiliations through membership and participation or community identification).

(d) Whenever the Contractor, or any subcontractor at any tier, subcontracts a portion of the construction work involving any construction trade, it shall physically include in each subcontract in excess of $10,000 those provisions which include the applicable goals for minority and female participation.

(e) The Contractor shall implement the specific affirmative action standards provided in subparagraphs (1) through (16) of paragraph (h) hereof. The goals set forth above are expressed as percentages of the total hours of employment and training of minority and female utilization the Contractor should reasonably be able to achieve in each construction trade in which it has employees in the premises. The Contractor is expected to make substantially uniform progress toward its goals in each craft during the period specified.

(f) Neither the provisions of any collective bargaining agreement, nor the failure by a union with whom the Contractor has a collective bargaining agreement, to refer either minorities or women shall excuse the Contractor's obligations hereunder.

(g) In order for the nonworking training hours of apprentices and trainees to be counted in meeting the goals, such apprentices and trainees must be employed by the Contractor during the training period, and the Contractor must have made a commitment to employ the apprentices and trainees at the completion of their training subject to the availability of employment opportunities. Trainees must be trained pursuant to training programs approved by the U.S. Department of Labor.

(h) The Contractor shall take specific affirmative actions to ensure equal employment opportunity ("EEO").

The evaluation of the Contractor's compliance with these provisions shall be based upon its good faith efforts to achieve maximum results from its actions. The Contractor shall document these efforts fully, and shall implement affirmative action steps at least as extensive as the following:

(1) Ensure and maintain a working environment free of harassment, intimidation, and coercion at all sites, and in all facilities at which the Contractor's employees are assigned to work. The Contractor, where possible, will assign two or more women to

each Phase of the construction project. The Contractor, shall specifically ensure that all foremen, superintendents, and other supervisory personnel at the premises are aware of and carry out the Contractor's obligation to maintain such a working environment, with specific attention to minority or female individuals working at the premises.

(2) Establish and maintain a current list of minority and female recruitment sources, provide written notification to minority and female recruitment sources and to community organizations when the Contractor or its unions have employment opportunities available, and maintain a record of the organizations' responses.

(3) Maintain a current file of the names, addresses and telephone numbers of each minority and female off-the-street applicant and minority or female referral from a union, a recruitment source or community organization and of what action was taken with respect to each such individual. If such individual was sent to the union hiring hall for referral and was not referred back to the Contractor by the union or, if referred, not employed by the Contractor, this shall be documented in the file with the reason therefor, along with whatever additional actions the Contractor may have taken.

(4) Provide immediate written notification to the Lessee when the union or unions with which the Contractor has a collective bargaining agreement has not referred to the Contractor a minority person or woman sent by the Contractor, or when the Contractor has other information that the union referral process has impeded the Contractor's efforts to meet its obligations.

(5) Develop on-the-job training opportunities and/or participate in training programs for the area which expressly include minorities and women, including upgrading programs and apprenticeship and training programs relevant to the Contractor's employment needs, especially those programs funded or approved by the Department of Labor. The Contractor shall provide notice of these programs to the sources compiled under subparagraph (2) above.

(6) Disseminate the Contractor's EEO Policy by providing notice of the policy to unions and training programs and requesting their cooperation in assisting the Contractor in meeting its EEO obligations; by including it in any policy manual and collective bargaining agreement; by publicizing it in the Contractor's newspaper, annual report,

etc.; by specific review of the policy with all management personnel and with all minority and female employees at least once a year; and by posting the Contractor's EEO policy on bulletin boards accessible to all employees at each location where construction work is performed.

(7) Review, at least every six months the Contractor's EEO policy and affirmative action obligations hereunder with all employees having any responsibility for hiring, assignment, layoff, termination or other employment decisions including specific review of these items with on-premises supervisory personnel such as Superintendents, General Foremen, etc., prior to the initiation of construction work at the premises. A written record shall be made and maintained identifying the time and place of these meetings, persons attending, subject matter discussed, and disposition of the subject matter.

(8) Disseminate the Contractor's EEO policy externally by including it in any advertising in the news media, specifically including minority and female news media, and providing written notification to and discussing the Contractor's EEO policy with other Contractors and Subcontractors with whom the Contractor does or anticipates doing business.

(9) Direct its recruitment efforts, both oral and written, to minority, female and community organizations, to schools with minority and female students and to minority and female recruitment and training organizations and to State-certified minority referral agencies serving the Contractor's recruitment area and employment needs. Not later than one month prior to the date for the acceptance of applications for apprenticeship or other training by any recruitment source, the Contractor shall send written notification to organizations such as the above, describing the openings, screening procedures, and tests to be used in the selection process.

(10) Encourage present minority and female employees to recruit other minority persons and women and, where reasonable, provide after school, summer and vacation employment to minority and female youth both on the premises and in other areas of a Contractor's work force.

(11) Tests and other selection requirements shall comply with 41 CFR Part 60-3.

(12) Conduct, at least every six months, an inventory and evaluation at least of all minority and female

personnel for promotional opportunities and encourage these employees to seek or to prepare for, through appropriate training, etc., such opportunities.

(13) Ensure that seniority practices, job classifications, work assignments and other personnel practices, do not have a discriminatory effect by continually monitoring all personnel and employment related activities to ensure that the EEO policy and the Contractor's obligations hereunder are being carried out.

(14) Ensure that all facilities and company activities are nonsegregated except that separate or single-user toilet and necessary changing facilities shall be provided to assure privacy between the sexes.

(15) Document and maintain a record of all solicitations of offers for subcontracts from minority and female construction contractors and suppliers, including circulation of solicitations to minority and female contractor associations and other business associations.

(16) Conduct a review, at least every six months, of all supervisors' adherence to and performance under the Contractor's EEO policies and affirmative action obligations.

(i) Contractors are encouraged to participate in voluntary associations which assist in fulfilling one or more of their affirmative action obligations (subparagraphs [1]-[16] of paragraph [h] above). The efforts of a contractor association, joint contractor-union, contractor-community, or other similar group of which the Contractor is a member and participant, may be asserted as fulfilling any one or more of its obligations under paragraph (h) hereof provided that: the Contractor actively participates in the group, makes good faith efforts to assure that the group has a positive impact on the employment of minorities and women in the industry, ensures that the concrete benefits of the program are reflected in the Contractor's minority and female workforce participation, makes good faith efforts to meet its individual goals and timetables, and can provide access to documentation which demonstrates the effectiveness of actions taken on behalf of the Contractor. The obligation to comply, however, is the Contractor's and failure of such a group to fulfill an obligation shall not be a defense for the Contractor's non-compliance.

(j) A single goal for minorities and a separate single goal for women have been established. The Contractor, however, is required to provide equal employment opportunity and

to take affirmative action for all minority groups, both male and female, and all women, both minority and non-minority. Consequently, the Contractor may be in violation hereof if a particular group is employed in a substantially disparate manner (for example, even though the Contractor has achieved its goals for women generally, the Contractor may be in violation hereof if a specific minority group of women is underutilized).

(k) The Contractor shall not use the goals and timetables or affirmative action standards to discriminate against any person because of race, color, religion, sex or national origin.

(l) The Contractor shall not enter into any subcontract with any person or firm debarred from Government contracts pursuant to Executive Order 11246.

(m) The Contractor shall carry out such sanctions and penalties for violation of this clause including suspension, termination and cancellation of existing subcontracts as may be imposed or ordered by the Lessee. Any Contractor who fails to carry out such sanctions and penalties shall be in violation hereof.

(n) The Contractor, in fulfilling its obligations hereunder shall implement specific affirmative action steps, at least as extensive as those standards prescribed in paragraph (h) hereof so as to achieve maximum results from its efforts to ensure equal employment opportunity. If the Contractor fails to comply with the requirements of these provisions, the Lessee shall proceed accordingly.

(o) The Contractor shall designate a responsible official to monitor all employment related activity to ensure that the company EEO policy is being carried out, to submit reports relating to the provisions hereof as may be required and to keep records. Records shall at least include for each employee the name, address, telephone numbers, construction trade, union affiliation if any, employee identification number when assigned, social security number, race, sex, status (e.g. mechanical apprentice, trainee, helper, or laborer), dates of changes in status, hours worked per week in the indicated trade, rate of pay, and location at which the work was performed. Records shall be maintained in an easily understandable and retrievable form; however, to the degree that existing records satisfy this requirement, contractors shall not be required to maintain separate records.

(p) Nothing herein provided shall be construed as a limitation upon the application of any laws which establish

different standards of compliance or upon the application of requirements for the hiring of local or other area residents (e.g., those under the Public Works Employment Act of 1977 and the Community Development Block Grant Program).

(q) Without limiting any other obligation, term or provision under the Lease, the Contractor shall cooperate with all federal, state or local agencies established for the purpose of implementing affirmative action compliance programs and shall comply with all procedures and guidelines established or which may be established by the Port Authority.

PART II. MINORITY BUSINESS ENTERPRISES/WOMEN-OWNED BUSINESS ENTERPRISES

As a matter of policy the Port Authority requires the Lessee and the Lessee shall itself and shall require the general contractor or other construction supervisor and each of the Lessee's contractors to use every good faith effort to provide for meaningful participation by Minority Business Enterprises (MBEs) and Women-owned Business Enterprises (WBEs) in the construction work pursuant to the provisions of this Schedule E. For purposes hereof, Minority Business Enterprise (MBE) shall mean any business enterprise which is at least fifty-one percentum owned by, or in the case of a publicly owned business, at least fifty-one percentum of the stock of which is owned by citizens or permanent resident aliens who are minorities and such ownership is real, substantial and continuing. For the purposes hereof, Women-owned Business Enterprise (WBE) shall mean any business enterprise which is at least fifty-one percentum owned by, or in the case of a publicly owned business, at least fifty-one percentum of the stock of which is owned by women and such ownership is real, substantial and continuing. A minority shall be as defined in paragraph 11(c) of Part I of this Schedule E. 'Meaningful participation' shall mean that at least twelve percent (12%) of the total dollar value of the construction contracts (including subcontracts) covering the construction work are for the participation of Minority Business Enterprises and that at least five percent (5%) of the total dollar value of the construction contracts (including subcontracts) are for the participation of Women-owned Business Enterprises. Good faith efforts to include meaningful participation by MBEs and WBEs shall include at least the following:

(a) Dividing the Work to be subcontracted into smaller portions where feasible.

(b) Actively and affirmatively soliciting bids for subcontracts from MBEs and WBEs, including circulation of

solicitations to minority and female contractor associations. The Contractor shall maintain records detailing the efforts made to provide for meaningful MBA and WBE participation in the work, including the names and addresses of all MBEs and WBEs contacted and, if any such MBE or WBE is not selected as a joint venturer or subcontractor, the reason for such decision.

(c) Making plans and specifications for prospective construction work available to MBEs and WBEs in sufficient time for review.

(d) Utilizing the list of eligible MBEs and WBEs maintained by the Port Authority or seeking minorities and women from other sources for the purpose of soliciting bids for subcontractors.

(e) Encouraging the formation of joint ventures, partnerships or other similar arrangements among subcontractors, where appropriate, to insure that the Lessee and Contractor will meet their obligations hereunder.

(f) Insuring that provision is made to provide progress payments to MBEs and WBEs on a timely basis.

(g) Not requiring bonds from and/or providing bonds and insurance for MBEs and WBEs, where appropriate.

LCB

For the Port Authority

Initialed:

MB

For the Lessee

SCHEDULE I

	mo. pmt.	remain prin	% of total principal
01-Oct-00	175,607.61	14,346,267.02	77.2118%
01-Nov-00	175,607.61	14,286,382.05	76.8895%
01-Dec-00	175,607.61	14,226,016.28	76.5646%
01-Jan-01	175,607.61	14,165,165.82	76.2371%
01-Feb-01	175,607.61	14,103,826.74	75.9070%
01-Mar-01	175,607.61	14,041,995.09	75.5742%
01-Apr-01	175,607.61	13,979,666.89	75.2387%
01-May-01	175,607.61	13,916,838.12	74.9006%
01-Jun-01	175,607.61	13,853,504.71	74.5597%
01-Jul-01	175,607.61	13,789,662.59	74.2161%
01-Aug-01	175,607.61	13,725,307.64	73.8698%
01-Sep-01	175,607.61	13,660,435.71	73.5206%
01-Oct-01	175,607.61	13,595,042.61	73.1687%
01-Nov-01	175,607.61	13,529,124.12	72.8139%
01-Dec-01	175,607.61	13,462,675.99	72.4563%
01-Jan-02	175,607.61	13,395,693.93	72.0958%
01-Feb-02	175,607.61	13,328,173.61	71.7324%
01-Mar-02	175,607.61	13,260,110.67	71.3661%
01-Apr-02	175,607.61	13,191,500.73	70.9968%
01-May-02	175,607.61	13,122,339.34	70.6246%
01-Jun-02	175,607.61	13,052,622.05	70.2494%
01-Jul-02	175,607.61	12,982,344.34	69.8711%
01-Aug-02	175,607.61	12,911,501.69	69.4899%
01-Sep-02	175,607.61	12,840,089.51	69.1055%
01-Oct-02	175,607.61	12,768,103.19	68.7181%
01-Nov-02	175,607.61	12,695,538.07	68.3275%
01-Dec-02	175,607.61	12,622,389.48	67.9339%
01-Jan-03	175,607.61	12,548,652.67	67.5370%
01-Feb-03	175,607.61	12,474,322.88	67.1370%
01-Mar-03	175,607.61	12,399,395.32	66.7337%
01-Apr-03	175,607.61	12,323,865.12	66.3272%
01-May-03	175,607.61	12,247,727.42	65.9174%
01-Jun-03	175,607.61	12,170,977.28	65.5044%
01-Jul-03	175,607.61	12,093,609.75	65.0880%
01-Aug-03	175,607.61	12,015,619.81	64.6682%
01-Sep-03	175,607.61	11,937,002.42	64.2451%
01-Oct-03	175,607.61	11,857,752.50	63.8186%
01-Nov-03	175,607.61	11,777,864.91	63.3886%
01-Dec-03	175,607.61	11,697,334.49	62.9552%
01-Jan-04	175,607.61	11,616,156.03	62.5183%
01-Feb-04	175,607.61	11,534,324.27	62.0779%
01-Mar-04	175,607.61	11,451,833.91	61.6339%
01-Apr-04	175,607.61	11,368,679.61	61.1864%
01-May-04	175,607.61	11,284,856.00	60.7352%
01-Jun-04	175,607.61	11,200,357.63	60.2805%
01-Jul-04	175,607.61	11,115,179.04	59.8220%
01-Aug-04	175,607.61	11,029,314.72	59.3599%
01-Sep-04	175,607.61	10,942,759.09	58.8941%
01-Oct-04	175,607.61	10,855,506.55	58.4245%
01-Nov-04	175,607.61	10,767,551.45	57.9511%

01-Dec-04	175,607.61	10,678,888.09	57.4739%
01-Jan-05	175,607.61	10,589,510.73	56.9929%
01-Feb-05	175,607.61	10,499,413.56	56.5080%
01-Mar-05	175,607.61	10,408,590.76	56.0192%
01-Apr-05	175,607.61	10,317,036.42	55.5264%
01-May-05	175,607.61	10,224,744.63	55.0297%
01-Jun-05	175,607.61	10,131,709.38	54.5290%
01-Jul-05	175,607.61	10,037,924.66	54.0242%
01-Aug-05	175,607.61	9,943,384.37	53.5154%
01-Sep-05	175,607.61	9,848,082.39	53.0025%
01-Oct-05	175,607.61	9,752,012.53	52.4855%
01-Nov-05	175,607.61	9,655,168.56	51.9642%
01-Dec-05	175,607.61	9,557,544.19	51.4388%
01-Jan-06	175,607.61	9,459,133.10	50.9092%
01-Feb-06	175,607.61	9,359,928.89	50.3753%
01-Mar-06	175,607.61	9,259,925.13	49.8370%
01-Apr-06	175,607.61	9,159,115.32	49.2945%
01-May-06	175,607.61	9,057,492.93	48.7475%
01-Jun-06	175,607.61	8,955,051.35	48.1962%
01-Jul-06	175,607.61	8,851,783.93	47.6404%
01-Aug-06	175,607.61	8,747,683.96	47.0801%
01-Sep-06	175,607.61	8,642,744.69	46.5154%
01-Oct-06	175,607.61	8,536,959.30	45.9460%
01-Nov-06	175,607.61	8,430,320.91	45.3721%
01-Dec-06	175,607.61	8,322,822.61	44.7935%
01-Jan-07	175,607.61	8,214,457.40	44.2103%
01-Feb-07	175,607.61	8,105,218.24	43.6224%
01-Mar-07	175,607.61	7,995,098.04	43.0297%
01-Apr-07	175,607.61	7,884,089.63	42.4323%
01-May-07	175,607.61	7,772,185.81	41.8300%
01-Jun-07	175,607.61	7,659,379.29	41.2229%
01-Jul-07	175,607.61	7,545,662.75	40.6109%
01-Aug-07	175,607.61	7,431,028.78	39.9939%
01-Sep-07	175,607.61	7,315,469.94	39.3720%
01-Oct-07	175,607.61	7,198,978.72	38.7450%
01-Nov-07	175,607.61	7,081,547.52	38.1130%
01-Dec-07	175,607.61	6,963,168.72	37.4759%
01-Jan-08	175,607.61	6,843,834.62	36.8336%
01-Feb-08	175,607.61	6,723,537.44	36.1862%
01-Mar-08	175,607.61	6,602,269.37	35.5335%
01-Apr-08	175,607.61	6,480,022.51	34.8756%
01-May-08	175,607.61	6,356,788.90	34.2123%
01-Jun-08	175,607.61	6,232,560.53	33.5437%
01-Jul-08	175,607.61	6,107,329.31	32.8697%
01-Aug-08	175,607.61	5,981,087.08	32.1903%
01-Sep-08	175,607.61	5,853,825.63	31.5054%
01-Oct-08	175,607.61	5,725,536.66	30.8149%
01-Nov-08	175,607.61	5,596,211.84	30.1189%
01-Dec-08	175,607.61	5,465,842.72	29.4172%
01-Jan-09	175,607.61	5,334,420.83	28.7099%
01-Feb-09	175,607.61	5,201,937.60	27.9969%
01-Mar-09	175,607.61	5,068,384.40	27.2781%
01-Apr-09	175,607.61	4,933,752.52	26.5535%
01-May-09	175,607.61	4,798,033.21	25.8231%
01-Jun-09	175,607.61	4,661,217.60	25.0867%

01-Jul-09	175,607.61	4,523,296.79	24.3444%
01-Aug-09	175,607.61	4,384,261.78	23.5962%
01-Sep-09	175,607.61	4,244,103.51	22.8418%
01-Oct-09	175,607.61	4,102,812.85	22.0814%
01-Nov-09	175,607.61	3,960,380.58	21.3148%
01-Dec-09	175,607.61	3,816,797.42	20.5421%
01-Jan-10	175,607.61	3,672,053.99	19.7630%
01-Feb-10	175,607.61	3,526,140.87	18.9777%
01-Mar-10	175,607.61	3,379,048.53	18.1861%
01-Apr-10	175,607.61	3,230,767.38	17.3880%
01-May-10	175,607.61	3,081,287.75	16.5835%
01-Jun-10	175,607.61	2,930,599.88	15.7725%
01-Jul-10	175,607.61	2,778,693.93	14.9550%
01-Aug-10	175,607.61	2,625,560.01	14.1308%
01-Sep-10	175,607.61	2,471,188.10	13.3000%
01-Oct-10	175,607.61	2,315,568.15	12.4624%
01-Nov-10	175,607.61	2,158,689.98	11.6181%
01-Dec-10	175,607.61	2,000,543.35	10.7669%
01-Jan-11	175,607.61	1,841,117.95	9.9089%
01-Feb-11	175,607.61	1,680,403.36	9.0440%
01-Mar-11	175,607.61	1,518,389.08	8.1720%
01-Apr-11	175,607.61	1,355,064.54	7.2930%
01-May-11	175,607.61	1,190,419.06	6.4069%
01-Jun-11	175,607.61	1,024,441.90	5.5136%
01-Jul-11	175,607.61	857,122.21	4.6130%
01-Aug-11	175,607.61	688,449.05	3.7052%
01-Sep-11	175,607.61	518,411.41	2.7901%
01-Oct-11	175,607.61	346,998.17	1.8675%
01-Nov-11	175,607.61	174,198.13	0.9375%
01-Dec-11	175,607.61	0.00	0.0000%

EXHIBIT Y

ELECTION

(PURSUANT TO SECTION 142 (b) OF THE
INTERNAL REVENUE CODE OF 1986)

1. Maher Terminals, Inc. (hereinafter called "the Lessee") pursuant to an Agreement of Lease bearing Port Authority Lease No. EP-249 (hereinafter called "the Lease") made under date of October 1, 2000, between the Lessee and The Port Authority of New York and New Jersey (hereinafter called "the Port Authority"), has leased a site and the structures, improvements, additions, buildings and facilities located or to be located thereon at the Elizabeth-Port Authority Marine Terminal, all as described in the Lease (hereinafter called "the Leased Premises") to be used basically as marine terminal premises constituting a portion of a public port for a term commencing on October 1, 2000 and expiring September 30, 2030.

2. The principal office of the Port Authority is at One World Trade Center, New York, New York 10048 and its taxpayer identification number is 13-6400654W.

3. The principal office of the Lessee is at One Journal Square Plaza, Jersey City, New Jersey 07306 and its taxpayer identification number is 22-1465814.

4. Capital expenditures in connection with the Leased Premises have been, or are expected to be made, in whole or in part by the Port Authority from "exempt facility bonds" (within the meaning of Section 142(a) of the Internal Revenue Code of 1986) issued by the Port Authority from time to time (such capital expenditures being hereinafter called "the Property").

5. The Lessee has not acquired and is not acquiring an ownership interest in the Property. The Lessee hereby irrevocably elects not to claim for purposes of federal, state or local taxation of income any depreciation or investment credits, for which it may be eligible with respect to the Property. The Lessee further agrees that this irrevocable election shall be binding upon its successors in interest, if any, under the Lease, and as a condition of any permitted sale or assignment of the interest of the Lessee under the Lease, every successor in interest shall furnish an executed irrevocable election in the form of the immediately preceding sentence to the Port Authority. The foregoing shall not grant or be deemed to grant to the Lessee the right to sell or assign, in any manner, its interests under the Lease.

6. It is understood that the foregoing election shall not apply to any personal property of the Lessee (including equipment and trade fixtures) removable without material damage to the Leased Premises, installed by the Lessee in or on the Leased Premises pursuant to the Lease, and which are deemed to be and remain the property of the Lessee.

ATTEST:

Secretary
(Corporate Seal)

MAHER TERMINALS, INC.

By : M. Brian Maher
Chairman and Chief Executive Officer

Dated: 10/25/00

Port Authority Lease No. EP-249

EXHIBIT I

to Lease No. EP-249

Between

THE PORT AUTHORITY OF NEW YORK AND NEW JERSEY

and

MAHER TERMINALS, INC.

(The Lessee)

THE PORT AUTHORITY OF NY & NJ

ENVIRONMENTAL REPORT AND TEST RESULTS BAY AVENUE TERMINAL ELIZABETH PORT AUTHORITY MARINE TERMINAL

Volume 1 of 1

JANUARY 2000 (Summary Version)

Prepared by:

PORT AUTHORITY OF NY & NJ
Engineering Department
Environmental Engineering Unit
One World Trade Center
New York, New York 10048

TABLE OF CONTENTS

Section	Title	Page
1.0	INTRODUCTION	1-1
2.0	FIELD ACTIVITIES	2-1
2.1	SOIL SAMPLING PROGRAM	2-1
2.2	GROUNDWATER SAMPLING PROGRAM	2-2
	2.2.1 Monitoring Well Installation	2-2
	2.2.2 Well Development	2-3
	2.2.3 Water Sampling Procedure Summary	2-4
2.3	QUALITY ASSURANCE AND QUALITY CONTROL	2-5
	2.3.1 QA/QC Samples	2-5
	2.3.1.1 Field Blanks	2-5
	2.3.1.2 Trip Blanks	2-5
	2.3.2 Equipment Decontamination	2-6
	2.3.2.1 Sampling Equipment Decontamination	2-6
	2.3.2.2 Heavy Machinery Decontamination	2-6
	2.3.2.3 Pump Decontamination	2-7
	2.3.2.4 Monitor Well Casing and Screen Decontamination	2-7
	2.3.3 Sample Documentation	2-7
	2.3.4 Laboratory Analytical Quality Assurance Procedures	2-9
2.4	WASTE MANAGEMENT	2-10
3.0	SURVEYING	3-1
4.0	RESULTS	4-1
4.1	SOIL SAMPLING RESULTS	4-1
4.2	GROUNDWATER SAMPLING RESULTS	4-1

Table of Contents
(Continued)

LIST OF FIGURES

Figure	Description	Page
1	Site Location Map	1 page
2	Site Plan	1 page
3	Soil Boring and Monitoring Well Location Plan	1 page

LIST OF TABLES

Table	Description	
1	Summary of Volatile Organic Soil Sampling Results	2 pages
2	Summary of Neutral & Acid Extractable Compound Soil Sampling Results	2 pages
3	Summary of PCB Soil Sampling Results	2 pages
4	Summary Pesticide Soil Sampling Results	2 pages
5	Summary Inorganic Compounds Soil Sampling Results	2 pages
6	Summary of Total Petroleum Hydrocarbons (TPHC) Soil Sampling Results	2 pages
7	Summary of Volatile Organic Groundwater Sampling Results	1 page
8	Summary of Base Neutral and Acid Extractable Compounds Groundwater Sampling Results	1 page
9	Summary of PCB Groundwater Sampling Results	1 page
10	Summary of Pesticides Groundwater Sampling Results	1 page
11	Summary of Inorganic Compound Groundwater Sampling Results	1 page
12	Summary of Total Petroleum Hydrocarbons Groundwater Sampling Results	1 page

LIST OF APPENDICES

Appendix	Description	
A	Field Screening Notes/Boring Logs/Well Construction Forms	59 pages
B	Survey Data	1 page

REPORT

SECTION 1.0

INTRODUCTION

The purpose of this investigation was to establish subsurface conditions for a 74-acre site located at Elizabeth Port Authority Marine Terminal (EPAMT). The location of the site is shown on Figures 1 and 2. The program included drilling 15 soil borings and installing 7 wells at locations shown on Figure 3.

The work performed as part of this investigation was conducted in accordance with *Technical Requirements for Site Remediation* (TRSR) (N.J.A.C 7:26E), and the New Jersey Department of Environmental Protection's (NJDEP), *Field Sampling Procedures Manual, May 1992.*

SECTION 2.0

FIELD ACTIVITIES

In order to characterize the site in regard to potential contaminants and to provide information about the geology and hydrogeology, a total of 15 soil borings were installed at the EPAMT site. The locations of the soil borings are presented in Figure 3. In general, the soil borings were advanced until groundwater was observed in order to evaluate the potential for the presence and migration of hazardous substances.

2.1 SOIL SAMPLING PROGRAM

The soil sampling investigation followed the requirements specified in N.J.A.C. 7:26E-3.6. At all boring locations the first 6 to 7 ft of soils were drilled and sampled using a hand auger in an attempt to limit any contact with underground utilities. Soil borings were completed using a 4 5/8 inch inside diameter hollow-stem auger. After penetration of surface features, continuous split-spoon soil samples were collected at 2-foot intervals using a 2-inch-diameter split-spoon. All soils (hand auger samples and split-spoon cores) were characterized by the on-site geologist and screened using an HNu photoionization detector. Additionally, HNu readings were recorded in the breathing zone of the on-site workers and headspace readings were recorded from soil samples collected from each discrete 2-foot sampling interval. All information was recorded on boring log forms or in bound field logbooks.

Thirty discrete soil samples and the corresponding Quality Assurance/Quality Control (QA/QC) samples were collected for contract laboratory analysis. For each boring, one soil sample was collected at a depth of 18 to 24 inches below the soil surface and a second sample was collected at a distance of 0 to 6 inches above the saturated zone. HNu readings of the headspace from each sampling interval were 0 parts per million (ppm). Field screening results along with the boring logs are provided as Appendix A. All soil samples were analyzed for total petroleum hydrocarbons (TPHC) and the complete list of priority pollutants with a forward library search (PP+40), including xylenes. Soil samples for volatile analysis were collected using methanol extraction methodology. In addition to collecting soil samples, trip blanks were submitted for laboratory analyses during the soil sampling task of this investigation. Field blanks and duplicate samples were not collected during the soil sampling phase of the investigation. All QA/QC procedures are detailed in Section 2.3 of this report.

Soil samples were transferred immediately to laboratory prepared sample containers, labeled, packed, and shipped for analysis in accordance with N.J.A.C. 7:26E 2.1. Soil samples were processed and labeled consistent with Section 2.3.3 of this document. Furthermore, sample Chain of Custody (COC) documentation was prepared for all samples collected as part of this investigation. Sample documentation and COCs were prepared consistent with procedures detailed

in Section 2.3.3. Each piece of sampling equipment was decontaminated prior to use at each new sample location and prior to sampling the respective soil strata. All sampling equipment was constructed of stainless steel. For additional information on equipment decontamination procedures, see Section 2.3.2. Upon completion of each boring location, all soils and derived waste generated were handled consistent with the site-specific Waste Management Plan detailed in the site-specific investigation work plan.

2.2 GROUNDWATER SAMPLING PROGRAM

The groundwater investigation was conducted as per N.J.A.C. 7:26E-3.7. The program included the installation of seven overburden on-site monitoring wells. The wells were installed in select boreholes created during the soil boring program. Approximate locations of these wells are shown on Figure 3. Craig Drilling, Inc. (a New Jersey-licensed well driller) installed the monitoring wells. The well driller obtained the required NJDEP well permits. The monitoring well construction logs are included in Appendix A.

2.2.1 Monitoring Well Installation

Well construction materials consisted of 2-inch-diameter, schedule 40 PVC well screens and riser pipe. The monitoring wells were constructed with 0.020-inch (20 slot) well screens and lengths were dependent on the location-specific geologic conditions. The well screens ranged in length from 9 to 10 ft. Groundwater was encountered during the drilling activities at 5.0 to 9.9 ft below ground surface. The annular space between the well screen and the formation was filled with filter pack to an elevation approximately 2 ft above the top of the screen. The remaining filter pack consisted of approximately 1 foot of finer sand on top of the filter pack. This finer filter pack was designed to act as a sand choke between the formation material and the well materials, and to limit the potential for grout to enter the well from above.

A bentonite seal was emplaced above the filter pack to prevent infiltration to the cement grout into the filter pack and well screen. The seal thickness was dependent on the stratigraphy at each location and ranged from 0.5 to 1.0 ft.

A cement-bentonite grout mixture was placed above the seal and extended to ground surface. All wells were completed with flush-mount construction casings. Cement pads were constructed around each well to provide drainage away from the wells. Protective PVC caps were placed on all PVC riser pipe. Locks were placed on the outside of the protective casings. Metal tags with the monitoring well identification number and the NJDEP well permit number were affixed to the manhole covers. A locking vacuum cap was affixed to each well. A concrete pad was constructed and a flush-mounted manhole cover was grouted in place to secure these locations.

2.2.2 Well Development

Each monitoring well was developed in accordance with the TRSR. Monitoring well development was performed in order to meet the following objectives:

- Remove fine materials that may have accumulated in the openings of the well screen during installation and key the well screen and filter pack into the formation being monitored.
- Remove fine materials from the sides of the borehole that resulted from drilling procedures.
- Stabilize the fine materials that remained in the vicinity of the well to retard their movement into the well, increasing well yield.
- Provide an estimate of the well yield.

Monitoring well development was accomplished by overpumping the well using an appropriately sized pump. The pump was field decontaminated, and new dedicated polyethylene tubing was used for each individual discharge line. To ensure that fine materials were removed during development, the pump intake was raised and lowered across the entire length of the well screen. Additionally, the pump was turned off and on and pumped at different rates during development to cause a surge effect in order to remove additional fine materials.

During development, field measurements of temperature, pH, specific conductivity, and turbidity and at some locations, salinity were obtained at the beginning of development, during development and upon completion of development. Observations related to groundwater appearance were recorded.

The development procedures for the monitoring wells continued until the following goals were met or exceeded:

- Discharge became clear.
- Flow rate stabilized.
- At least five volumes of water were removed and the well pumped for a minimum of 4 hours.
- Turbidity readings were less than 50 nephelometric turbidity units (NTUs) as determined by a nephelometer.

2.2.3 Water Sampling Procedure Summary

Groundwater sampling was performed on 27 and 28 October 1999 (at least 2 weeks after development of the last well installed on-site). During the groundwater sampling program, all seven monitoring wells were purged and six of the wells sampled using low-flow protocol, including a field decontaminated pump equipped with new dedicated, polyethylene Teflon-lined discharge tubing. During purging, wells were pumped at a low rate (lower than recharge rate) so that the drawdown was kept to the lowest possible amount. Despite the use of water level measurements, taken to ensure that the water column was not purged to dryness, well MW-4 became dry and could not be sampled.

While monitoring wells were purged, water quality parameters including temperature, pH, specific conductivity stabilized (less then 10% variation). Turbidity, levels in wells MW-1, MW-8, and MW-14 were less than 50 NTUs. Turbidity levels in well Nos. MW-2, MW-7 and MW-13 had varying turbidity levels. Well MW- 2 varied between 869 and 236 with an overall decrease in turbidity as purging continued. Well MW-7 varied between 367 and 10 with irregular fluctuations in the turbidity value. Turbidity values for MW-7 were approximately 50 NTUs prior to sampling. Well MW-13 turbidity levels varied between 751 and 344 with irregular fluctuations. Purge rates for wells did not exceed the purge rates at which the monitoring wells were developed. During well purging, groundwater was monitored for the presence of volatile organic compounds (VOCs). Additional groundwater quality parameters including Eh (millivolts), salinity, and dissolved oxygen were obtained to provide additional water quality data. The groundwater sampling procedure employed during the sampling event is provided below.

1. Measure static water level in monitoring well using an electronic water level device to inimize disturbance to the water column.

2. Check for free product or sheen floating on water surface in well.

3. Position low-flow pump in the water column with the intake placed at a point between the middle and top of the screened interval.

4. Purge the well using a low-flow rate (<0.5 l/min) until indicator parameters (i.e., pH, conductivity, oxygen, etc.) have stabilized. (Note: Goal during purging is to limit drawdown to < 0.1 m).

5. Collect groundwater samples using same flow rates as established during purging.

6. Fill sample bottles directly from the pump discharge avoiding excessive agitation of sample. Fill VOA sample vials first, then remaining sample bottles.

7. Pumps used for groundwater sampling will be decontaminated prior to use according to the procedures described herein. One sample shall be collected from each monitoring well. All samples are to be separate grab samples.

Each water sample was analyzed for TPHC, PP+40, VOCs + 15, total dissolved solids and total chlorides. Temperature, pH, and specific conductivity were measured in the field. COC and labeling procedures are detailed in Section 2.3.3.

2.3 QUALITY ASSURANCE AND QUALITY CONTROL

In order to generate analytical data of known and defensible standards, quality assurance (QA) and quality control (QC) protocols for sampling and laboratory analysis complied with requirements specified in N.J.A.C. 7:26E-2.1. This was conducted to ensure that samples obtained in the field were representative of the particular environment from which they were collected and were of satisfactory quality to meet the project objectives.

2.3.1 QA/QC Samples

2.3.1.1 Field Blanks

A field blank composite sample was taken during the groundwater sampling portion of the investigation. A field blank was conducted using two identical sets of cleaned sample containers. One set of containers was empty and served as the sample containers to be analyzed. The second set of containers was filled with laboratory-demonstrated analyte-free water. At the field location, the analyte-free water was poured over the clean sample equipment (pump) and placed in the empty sample containers for analysis. The field blank was handled, transported, and analyzed in the same manner as samples acquired that day. The field blank was performed at the rate of one per sampling day per type of sampling equipment, and packaged with its associated matrix. The field blank for groundwater was analyzed for all the same parameters as the samples collected that day.

2.3.1.2 Trip Blanks

Trip blanks are required only for aqueous sampling events for volatile organics and for soil samples collected with the methanol preservation method. Sample bottles for aqueous trip blanks were filled at the laboratory with laboratory-demonstrated analyte-free water. Sample bottles for trip blanks associated with the volatile soil samples collected using the methanol preservation method were filled and weighed at the laboratory with pesticide-grade methanol. The trip blanks traveled with the sample bottles and are not opened in the field. They are handled, transported, and analyzed along with other samples. For aqueous samples, one trip blank must be provided per shipment or 2 day sampling event. For soil samples collected using the methanol preservation method, one trip blank must accompany each sample shipment.

2.3.2 Equipment Decontamination

2.3.2.1 Sampling Equipment Decontamination

All sampling equipment, except heavy machinery and submersible pumps, was decontaminated according to the type of equipment.

Soil sampling equipment was decontaminated according to the following procedure:

1. Non-phosphate detergent plus tap water wash.
2. Tap water rinse.
3. Distilled/deionized water rinse.

Groundwater sampling equipment was decontaminated and packaged in the laboratory, and dedicated for exclusive use at one sample location only. The laboratory utilized the following decontamination procedure:

1. Non-phosphate detergent plus tap water wash.
2. Tap water rinse.
3. Distilled/deionized water rinse.
4. 10% nitric acid solution rinse.
5. Distilled/deionized water rinse.
6. Methanol (pesticide grade) rinse.*
7. Total air dry.
8. Distilled/deionized water rinse.

* Methanol will be used in place of acetone since acetone is a target analyte.

All decontaminated sampling equipment will be stored and handled in a manner appropriate to prevent contamination. Information concerning the decontamination methodology, date, time, and personnel was recorded in the field logbook.

2.3.2.2 Heavy Machinery Decontamination

Prior to use on-site, heavy equipment was steam cleaned or manually washed. Parts prone to contact with contaminated materials required more frequent cleaning to prevent cross-contamination of environmental samples. For example, augers and split-spoon sampling devices were steam cleaned between sampling locations.

2.3.2.3 Pump Decontamination

The pump used for evacuation of water from monitoring wells prior to sample collection was decontaminated in order to eliminate the possibility of contamination introduced by pump insertion.

The pump was cleaned and flushed between use at each monitoring well. The outside of the pump was manually washed using non-phosphate detergent and water, followed by a potable (tap) water rinse. The pump was then flushed with 20 gallons of potable water pumped through the housing and hose. After completion of the flushing, the exterior housing was rinsed with distilled and deionized water. This procedure was conducted between uses. Rinsate from the pump decontamination was collected in drums for disposal. After each use, the hose was cut up into manageable-sized pieces and disposed of with other investigation-derived wastes.

2.3.2.4 Monitor Well Casing and Screen Decontamination

Before installation, well casings and screens were manually scrubbed in the field to remove foreign material. Casings and screens were also thoroughly steam cleaned to remove all traces of oil and grease which may have been present, especially at threaded joints. Casings were carefully handled and stored to prevent cross-contamination prior to installation.

2.3.3 Sample Documentation

During sampling, all activities were recorded in a logbook to provide an accurate record of the sampling event and the procedures followed. Entries made by sampling personnel in the logbook included:

- Date/Time/Weather
- Sampler/Geologist/Soil Scientists' Names
- Sample Point Identification (including location, matrix, and sample depth)
- Sketch Showing the Sampling Point Location (including reference distances)
- Soil Profile
- Sample Size
- Sampling Equipment Used
- Field Measures (where appropriate)
- General Comments (e.g., odor, staining, etc.)

The field crew also labeled each sample container with the appropriate information necessary to identify the sample as listed below:

- Unique Sample Identification Number
- Date

- Time of Sampling
- Name
- Preservation
- Analyses
- Sampler's Initials

This information was then supplemented and cross referenced on a COC form which provided documentation of the handling of each sample from collection to laboratory acceptance.

A COC form containing the information listed below was completed by the field crew and signed by the sampler and all personnel handling the samples before the samples were relinquished to the laboratory. The COC form should contain the following information:

- Project Name
- Date
- Sampler's Initials
- Sample Identification Number
- Name/Description of Sample (Analytical Parameters)
- Preservation
- Number of Containers
- Holding Conditions and Locations
- Signature of all Handlers and Date and Time of Transfers
- Organization or Affiliation of all Handlers and Reason for Transfer

All samples were preserved at the time of collection and packaged in coolers of sufficient size to hold all containers, ice, and packing material to prevent breakage. Coolers were of suitable type and integrity to transport the samples.

At the laboratory, laboratory personnel recorded receipt of samples on the COC form. The original or a copy of the form was returned to the shipper. The COC record was checked by laboratory personnel against the information regarding the analysis requested. If any discrepancies were discovered, they were resolved with the person requesting the analysis and recorded to provide a permanent record of the event. A record of the information detailing the handling of a particular sample through each stage of analysis was provided by completing a laboratory chronicle form. This form typically provides the following information:

- Job Reference
- Sample Matrix
- Sample Number
- Date Sampled
- Date and Time Received by Laboratory
- Holding Conditions
- Analytical Parameter

- Extraction Date/Time and Extractor's Initials
- Analysis Date/Time and Analyst's Initials
- QA Batch Number, Date Reviewed, and Reviewer's Initials

2.3.4 Laboratory Analytical Quality Assurance Procedures

Analyses of samples were completed in accordance with NJDEP and U.S. Environmental Protection Agency (EPA) Methodologies.

The contract laboratory provided sample containers for the requested analyses appropriate for analysis of each matrix. The sample containers were of sufficient size to permit replicate analyses to be run from the sample matrix. All unused portions of samples will be archived by the laboratory until written notification from Port Authority regarding their disposition is received. The contract laboratory will also retain samples and sample extracts in a sample archive for future analyses if requested by Port Authority representatives.

Calibration and periodic inspection of laboratory instruments were performed in accordance with EPA and/or manufacturer's specifications. Reference standards and quality control (QC) samples (spikes, blanks, and duplicates) were used as necessary to determine the accuracy and precision of procedures, instruments, and operators. If QC sample analysis results indicate QC values outside the control limit range, sample analysis was suspended until the instrument was recalibrated. In general, the following QC requirements apply to all samples:

- Analysis of an appropriate blank with every set.
- Analysis of at least one standard at mid-range concentration (preferably an additional standard near the detection level).
- Annual analysis of external reference samples.
- Annual analysis of split or double blind samples.
- Determination of a detection limit for each method and parameter.
- Laboratories must keep records of the following information:

  - Date, title, analytical method name and reference
  - Time of analysis
  - Details of methods not specified in referenced procedures, and sample numbers
  - All raw data (measurements)
  - Calculations
  - Results
  - Equipment used, and instrumental parameters
  - Analyst signature or initials.

- QC data was reported with the analytical results.

The laboratory provided, as a final report, reduced-data deliverables in accordance with N.J.A.C 7:26E, Appendix A, Sections III and IV.

2.4 WASTE MANAGEMENT

Types of waste material generated during the site investigation included soil drilling cuttings, monitoring well development groundwater, decontamination rinsates, expendable materials, and personal protective equipment (e.g., gloves, towels, etc.).

Soil cuttings from borings and holes converted to monitoring wells were inspected for contamination by field observation (visual and odor) and instruments (HNu meter). When the material was not contaminated based on field observations, the facility environmental coordinator located an area on the work site to reuse the material as backfill. The material may be used on-site in areas outside the work area, providing the area has similar subsurface characteristics or results of the soil analysis are below the residential cleanup criteria. This determination will be the responsibility of the facility environmental coordinator. Material that could not be reused on-site was properly disposed off-site utilizing the Port Facility Call-in Disposal Contractor.

Prior to pumping water from a monitoring well, a sample was obtained using a clear bottom Teflon bailer. The water sample was inspected for contamination by observation (visual and odor), HNu measurements, and field tests (pH). Uncontaminated water was reapplied to the ground surface in a manner not to allow water to run off-site or over stained areas.

SECTION 3.0

SURVEYING

The final latitude, longitude and elevation to the nearest 0.01 ft of all installed borings and wells were recorded in North American Datum (NAD) 27 format. Elevation was measured from the top of the well casing. This information is presented in Appendix B.

SECTION 4.0

RESULTS

4.1 SOIL SAMPLING RESULTS

The analytical results of the 30 soil samples and associated trip blanks collected by Port Authority personnel are contained in Tables 1 – 6.

- Table 1 summarizes the results of the Volatile Organic (VOA) analyses performed on the soil samples.
- Table 2 summarizes the results of the Base Neutral and Acid Extractables (BNA) analyses performed on the soil samples.
- Table 3 summarizes the results of the polychlorinated biphenols (PCB) analyses performed on the soil samples
- Table 4 summarizes the results of the pesticide analyses performed on the soil samples.
- Table 5 summarizes the results of the inorganic analyses performed on the soil samples.
- Table 6 summarizes the results of the total petroleum hydrocarbons (TPHC) analyses performed on the soil samples.

4.2 GROUNDWATER SAMPLING RESULTS

The analytical results of the groundwater samples collected by the Port Authority personnel from the five on-site monitoring wells are summarized in Tables 7 – 12.

- Table 7 summarizes the VOC analysis results for the groundwater samples.
- Table 8 summarizes the BNA analysis results for the groundwater samples.
- Table 9 summarizes the PCB analysis results for the groundwater samples.
- Table 10 summarizes the pesticides analysis results for the groundwater samples.
- Table 11 summarizes the priority pollutant metals analysis for the groundwater samples.
- Table 12 summarizes the TPHC analysis for the groundwater samples.

FIGURES

TABLES

Table 7
Summary of Volatile Organics Groundwater Sampling Results
Bay Avenue Terminal
Port Elizabeth
Elizabeth, New Jersey

Client Sample ID:	MW-13		MW-7		MW-2		MW-1		MW-14		MW-8	
Vertech Sample ID:	17030-1		17030-2		17030-3		17030-4		17030-7		17030-8	
Sampling Date:	10/27/99		10/27/99		10/27/99		10/28/99		10/28/99		10/28/99	
Units:	ug/L		ug/L		ug/L		ug/L		ug/L		ug/L	
1,1,1-Trichloroethane	0.31	U	0.31	U	0.31	U	0.31	U	0.31	U	0.31	U
1,1,2,2-Tetrachloroethane	0.14	U	0.14	U	0.14	U	0.14	U	0.14	U	0.14	U
1,1,2-Trichloroethane	0.37	U	0.37	U	0.37	U	0.37	U	0.37	U	0.37	U
1,1-Dichloroethane	0.18	U	0.18	U	0.18	U	0.18	U	0.18	U	0.18	U
1,1-Dichloroethene	0.48	U	0.48	U	0.48	U	0.48	U	0.48	U	0.48	U
1,2-Dichlorobenzene	0.19	U	0.19	U	0.19	U	0.19	U	0.19	U	0.19	U
1,2-Dichloroethane	0.19	U	0.19	U	0.19	U	0.19	U	0.19	U	0.19	U
1,2-Dichloropropane	0.12	U	0.12	U	0.12	U	0.12	U	0.12	U	0.12	U
1,3-Dichlorobenzene	0.11	U	0.11	U	0.11	U	0.11	U	0.11	U	0.11	U
1,4-Dichlorobenzene	0.14	U	0.14	U	0.14	U	0.14	U	0.14	U	0.14	U
2-Chloroethylvinylether	0.37	U	0.37	U	0.37	U	0.37	U	0.37	U	0.37	U
2-Chloronaphthalene	1.76	U	1.76	U	1.07	U	1.76	U	1.76	U	1.94	U
2-Chlorophenol	1.22	U	1.22	U	1.03	U	1.22	U	1.22	U	1.34	U
Benzene	0.14	U	0.14	U	0.14	U	0.14	U	0.14	U	0.14	U
Bromodichloromethane	0.12	U	0.12	U	0.12	U	0.12	U	0.12	U	0.12	U
Bromoform	0.20	U	0.20	U	0.20	U	0.20	U	0.20	U	0.20	U
Bromomethane	0.37	U	0.37	U	0.37	U	0.37	U	0.37	U	0.37	U
c-1,3-Dichloropropene	0.19	U	0.19	U	0.19	U	0.19	U	0.19	U	0.19	U
Carbon Tetrachloride	0.34	U	0.34	U	0.34	U	0.34	U	0.34	U	0.34	U
Chlorobenzene	0.21	U	0.21	U	0.21	U	0.21	U	0.21	U	0.21	U
Chloroethane	0.25	U	0.25	U	0.25	U	0.25	U	0.25	U	0.25	U
Chloroform	0.26	U	0.26	U	0.26	U	0.26	U	0.26	U	0.26	U
Chloromethane	0.38	U	0.38	U	0.38	U	0.38	U	0.38	U	0.38	U
Dibromochloromethane	0.18	U	0.18	U	0.18	U	0.18	U	0.18	U	0.18	U
Dichloromethane	0.30	U	0.30	U	0.30	U	0.30	U	0.30	U	0.30	U
Diethylphthalate	2.51	U	2.51	U	2.58	U	2.51	U	2.51	U	2.77	U
Ethylbenzene	0.21	U	0.21	U	0.21	U	0.21	U	0.21	U	0.21	U
t-1,2-Dichloroethene	0.28	U	0.28	U	0.28	U	0.28	U	0.28	U	0.28	U
t-1,3-Dichloropropene	0.16	U	0.16	U	0.16	U	0.16	U	0.16	U	0.16	U
Tetrachloroethene	0.28	U	0.28	U	0.28	U	0.28	U	0.28	U	0.28	U
Toluene	0.16	U	0.16	U	0.16	U	0.16	U	0.16	U	0.16	U
Trichloroethene	0.27	U	0.27	U	0.27	U	0.27	U	0.27	U	0.27	U
Trichlorofluoromethane	0.32	U	0.32	U	0.32	U	0.32	U	0.32	U	0.32	U
Vinyl Chloride	0.41	U	0.41	U	0.41	U	0.41	U	0.41	U	0.41	U
Xylenes(Total)	0.72	U	0.72	U	0.72	U	0.72	U	0.72	U	0.72	U

Notes:

U - Not detected at the PQL

ug/L - micrograms per liter (parts per billion)

Table 8
Summary of Base Neutral and Acid Extractable Compounds Groundwater Sampling Results
Bay Avenue Terminal
Port Elizabeth
Elizabeth, New Jersey

Client Sample ID:	MW-13		MW-7		MW-3		MW-1		MW-14		MW-8	
Varitech Sample ID:	17030-12		17030-2		17030-3		17030-8		17030-7		17030-6	
Sampling Date:	10/27/99		10/27/99		10/27/99		10/28/99		10/28/99		10/28/99	
Units:	ug/L		ug/L		ug/L		ug/L		ug/L		ug/L	
1,2,4-Trichlorobenzene	0.54	U	0.54	U	1.07	U	0.54	U	0.54	U	0.60	U
1,2-Dichlorobenzene	1.51	U	1.51	U	1.17	U	1.51	U	1.51	U	1.66	U
1,3-Dichlorobenzene	1.50	U	1.50	U	1.21	U	1.50	U	1.50	U	1.65	U
1,4-Dichlorobenzene	1.48	U	1.48	U	1.18	U	1.48	U	1.48	U	1.63	U
2,4,5-Trichlorophenol	1.68	U	1.68	U	0.92	U	1.68	U	1.68	U	1.85	U
2,4,6-Trichlorophenol	1.51	U	1.51	U	0.85	U	1.51	U	1.51	U	1.66	U
2,4-Dichlorophenol	1.49	U	1.49	U	1.08	U	1.49	U	1.49	U	1.64	U
2,4-Dimethylphenol	1.92	U	1.92	U	1.08	U	1.92	U	1.92	U	2.12	U
2,4-Dinitrophenol	9.62	U	9.62	U	4.64	U	9.62	U	9.62	U	10.6	U
2,4-Dinitrotoluene	1.94	U	1.94	U	1.02	U	1.94	U	1.94	U	2.14	U
2,6-Dinitrotoluene	1.85	U	1.85	U	0.84	U	1.85	U	1.85	U	2.04	U
2-Chloronaphthalene	1.76	U	1.76	U	1.07	U	1.76	U	1.76	U	1.94	U
2-Chlorophenol	1.22	U	1.22	U	1.03	U	1.22	U	1.22	U	1.34	U
2-Methylnaphthalene	1.85	U	1.85	U	0.86	U	1.85	U	1.85	U	2.04	U
2-Methylphenol	1.70	U	1.70	U	1.24	U	1.70	U	1.70	U	1.87	U
2-Nitroaniline	2.24	U	2.24	U	1.12	U	2.24	U	2.24	U	2.47	U
2-Nitrophenol	1.55	U	1.55	U	1.43	U	1.55	U	1.55	U	1.70	U
3,3'-Dichlorobenzidine	2.56	U	2.56	U	0.68	U	2.56	U	2.56	U	2.81	U
3,4-Methylphenol	1.55	U	1.55	U	2.16	U	1.55	U	1.55	U	1.71	U
3-Nitroaniline	1.55	U	1.55	U	0.69	U	1.55	U	1.55	U	1.71	U
4,6-Dinitro-2-methylphenol	10.2	U	10.2	U	2.54	U	10.2	U	10.2	U	11.2	U
4-Bromophenyl-phenylether	2.03	U	2.03	U	0.50	U	2.03	U	2.03	U	2.23	U
4-Chloro-3-methylphenol	1.53	U	1.53	U	1.03	U	1.53	U	1.53	U	1.68	U
4-Chloroaniline	1.45	U	1.45	U	0.70	U	1.45	U	1.45	U	1.60	U
4-Chlorophenyl-phenyl ether	2.13	U	2.13	U	0.68	U	2.13	U	2.13	U	2.34	U
4-Nitroaniline	1.43	U	1.43	U	0.65	U	1.43	U	1.43	U	1.57	U
4-Nitrophenol	5.00	U	5.00	U	1.91	U	5.00	U	5.00	U	5.50	U
Acenaphthene	1.78	U	1.78	U	0.96	U	0.40	J	1.78	U	1.95	U
Acenaphthylene	2.25	U	2.25	U	1.00	U	2.25	U	2.25	U	2.48	U
Anthracene	1.78	U	1.78	U	0.71	U	1.78	U	1.78	U	1.95	U
Benzo(a)anthracene	1.87	U	1.87	U	0.62	U	1.87	U	1.87	U	2.06	U
Benzo(a)pyrene	1.91	U	1.91	U	0.81	U	1.91	U	1.91	U	2.10	U
Benzo(b)fluoranthene	1.80	U	1.80	U	2.52	U	1.80	U	1.80	U	1.98	U
Benzo(g,h,i)perylene	2.34	U	2.34	U	0.65	U	2.34	U	2.34	U	2.58	U
Benzo(k)fluoranthene	2.10	U	2.10	U	2.00	U	2.10	U	2.10	U	2.31	U
Benzoic acid	10.3	U	10.3	U	2.49	U	10.3	U	10.3	U	11.3	U
Benzyl alcohol	1.38	U	1.38	U	1.54	U	1.38	U	1.38	U	1.51	U
bis(2-Chloroethoxy)methane	2.10	U	2.10	U	0.81	U	2.10	U	2.10	U	2.31	U
bis(2-Chloroethyl)ether	1.53	U	1.53	U	0.57	U	1.53	U	1.53	U	1.69	U
bis(2-Chloroisopropyl)ether	0.86	U	0.86	U	0.87	U	0.86	U	0.86	U	0.95	U
bis(2-Ethylhexyl)phthalate	0.93	U	1.20	B	1.05	U	0.93	U	0.93	U	1.02	U
Butylbenzylphthalate	3.43	U	3.43	U	2.90	U	3.43	U	3.43	U	3.77	U
Chrysene	2.16	U	2.16	U	1.09	U	2.16	U	2.16	U	2.37	U
Dibenzo(a,h)anthracene	2.13	U	2.13	U	0.69	U	2.13	U	2.13	U	2.34	U
Dibenzofuran	2.10	U	2.10	U	0.67	U	2.10	U	2.10	U	2.31	U
Dibromochloromethane	0.18	U	0.18	U	0.18	U	0.18	U	0.18	U	0.18	U
Diethylphthalate	2.51	U	2.51	U	2.58	U	2.51	U	2.51	U	2.77	U
Dimethyl phthalate	3.98	U	3.98	U	3.56	U	3.98	U	3.98	U	4.38	U
Di-n-butylphthalate	2.38	U	2.38	U	2.90	U	2.38	U	2.38	U	2.62	U
Di-n-octylphthalate	2.87	U	2.87	U	0.64	U	2.87	U	2.87	U	3.16	U
Fluoranthene	2.22	U	2.22	U	0.85	U	2.22	U	2.22	U	2.44	U
Fluorene	2.16	U	2.16	U	0.84	U	2.16	U	2.16	U	2.38	U
Hexachlorobenzene	2.27	U	2.27	U	0.82	U	2.27	U	2.27	U	2.50	U
Hexachlorobutadiene	10.0	U	10.0	U	1.63	U	10.0	U	10.0	U	11.0	U
Hexachlorocyclopentadiene	4.66	U	4.66	U	2.16	U	4.66	U	4.66	U	5.13	U
Hexachloroethane	1.87	U	1.87	U	1.83	U	1.87	U	1.87	U	2.05	U
Indeno(1,2,3-cd)pyrene	2.12	U	2.12	U	0.67	U	2.12	U	2.12	U	2.33	U
Isophorone	1.88	U	1.88	U	0.94	U	1.88	U	1.88	U	2.07	U
Naphthalene	1.78	U	1.78	U	1.04	U	1.78	U	1.78	U	1.96	U
Nitrobenzene	1.74	U	1.74	U	1.20	U	1.74	U	1.74	U	1.91	U
N-Nitroso-di-n-propylamine	1.84	U	1.84	U	1.09	U	1.84	U	1.84	U	2.03	U
N-nitrosodiphenylamine	1.96	U	1.96	U	0.57	U	1.96	U	1.96	U	2.15	U
Pentachlorophenol	50.0	U	50.0	U	2.24	U	50.0	U	50.0	U	55.0	U
Phenanthrene	1.98	U	1.98	U	0.64	U	0.33	J	1.98	U	2.18	U
Phenol	1.53	U	1.53	U	0.32	U	1.53	U	1.53	U	1.69	U
Pyrene	2.00	U	2.00	U	0.65	U	2.00	U	2.00	U	2.20	U

Notes:
U - Not detected at the PQL
ug/L - micrograms per liter (parts per billion)

Table 9
Summary of PCB Groundwater Sampling Results
Bay Avenue Terminal
Port Elizabeth
Elizabeth, New Jersey

Client Sample ID:	MW-13		MW-7		MW-2		MW-1		MW-14		MW-6	
VertTech Sample ID:	I7030-1		I7030-2		I7030-3		I7030-6		I7030-7		I7030-8	
Sampling Date:	10/27/99		10/27/99		10/27/99		10/28/99		10/28/99		10/28/99	
Units:	ug/L		ug/L		ug/L		ug/L		ug/L		ug/L	
PCB 1016	0.080	U	0.080	U	0.080	U	0.080	U	0.080	U	0.080	U
PCB 1221	0.030	U	0.030	U	0.030	U	0.030	U	0.030	U	0.030	U
PCB 1232	0.11	U	0.11	U	0.11	U	0.11	U	0.11	U	0.11	U
PCB 1242	0.020	U	0.020	U	0.020	U	0.020	U	0.020	U	0.020	U
PCB 1248	0.090	U	0.090	U	0.090	U	0.090	U	0.090	U	0.090	U
PCB 1254	0.040	U	0.040	U	0.040	U	0.040	U	0.040	U	0.040	U
PCB 1260	0.080	U	0.080	U	0.080	U	0.080	U	0.080	U	0.080	U

Notes:
U - Not detected at the PQL
ug/L - micrograms per liter (parts per billion)

Table 10
Summary of Pesticides Groundwater Sampling Results
Bay Avenue Terminal
Port Elizabeth
Elizabeth, New Jersey

Client Sample ID:	MW-13		MW-7		MW-2		MW-1		MW-14		MW-8	
Vertech Sample ID:	I7030-1		I7030-2		I7030-3		I7030-4		I7030-7		I7030-8	
Sampling Date:	10/27/99		10/27/99		10/27/99		10/28/99		10/28/99		10/28/99	
Units:	ug/L		ug/L		ug/L		ug/L		ug/L		ug/L	
a-BHC	0.016	U	0.016	U	0.016	U	0.016	U	0.016	U	0.016	U
g-BHC (Lindane)	0.015	U	0.015	U	0.015	U	0.015	U	0.015	U	0.015	U
b-BHC	0.015	U	0.015	U	0.015	U	0.015	U	0.015	U	0.015	U
Heptachlor	0.022	U	0.022	U	0.022	U	0.022	U	0.022	U	0.022	U
d-BHC	0.012	U	0.012	U	0.012	U	0.012	U	0.012	U	0.012	U
Aldrin	0.015	U	0.015	U	0.015	U	0.015	U	0.015	U	0.015	U
Heptachlor epoxide	0.015	U	0.015	U	0.015	U	0.015	U	0.015	U	0.015	U
Endosulfan I	0.015	U	0.015	U	0.015	U	0.015	U	0.015	U	0.015	U
4,4'-DDE	0.012	U	0.012	U	0.012	U	0.012	U	0.012	U	0.012	U
Dieldrin	0.015	U	0.015	U	0.015	U	0.015	U	0.015	U	0.015	U
Endrin	0.017	U	0.017	U	0.017	U	0.017	U	0.017	U	0.017	U
4,4'-DDD	0.015	U	0.015	U	0.015	U	0.015	U	0.015	U	0.015	U
Endosulfan II	0.017	U	0.017	U	0.017	U	0.017	U	0.017	U	0.017	U
4,4'-DDT	0.0050	U	0.0050	U	0.0050	U	0.0050	U	0.0050	U	0.0050	U
Endrin aldehyde	0.0050	U	0.0050	U	0.0050	U	0.0050	U	0.0050	U	0.0050	U
Endosulfan sulfate	0.015	U	0.015	U	0.015	U	0.015	U	0.015	U	0.015	U
alpha-Chlordane	0.012	U	0.012	U	0.012	U	0.012	U	0.012	U	0.012	U
gamma-Chlordane	0.012	U	0.012	U	0.012	U	0.012	U	0.012	U	0.012	U
Chlordane	0.030	U	0.030	U	0.030	U	0.030	U	0.030	U	0.030	U
Toxaphene	0.16	U	0.16	U	0.16	U	0.16	U	0.16	U	0.16	U
Methoxychlor	0.0060	U	0.0060	U	0.0060	U	0.0060	U	0.0060	U	0.0060	U
Endrin ketone	0.020	U	0.020	U	0.020	U	0.020	U	0.020	U	0.020	U

Notes:
U - Not detected at the PQL
ug/L - micrograms per liter (parts per billion)

Table 11
Summary of Inorganic Compounds Groundwater Sampling Results
Bay Avenue Terminal
Port Elizabeth
Elizabeth, New Jersey

Client Sample ID	MW-1		MW-2		MW-3		MW-4		MW-5		MW-6	
Vertex Sample ID	17030-1		17030-2		17030-3		17030-4		17030-5		17030-6	
Sampling Date	10/27/99		10/27/99		10/27/99		10/27/99		10/28/99		10/28/99	
Units	mg/L		mg/L		mg/L		mg/L		mg/L		mg/L	
Antimony	0.011	U	0.032		0.011	U	0.011	U	0.0080	J	0.0030	J
Arsenic	0.049		0.079		0.011		0.036		0.018		0.075	
Beryllium	0.0010	J	0.0022	U	0.0022	U	0.0022	U	0.0022	U	0.0010	J
Cadmium	0.0020	J	0.013		0.0033	U	0.0020	J	0.0010	J	0.0020	J
Chromium	0.025		0.012		0.0080		0.0056	U	0.0020	J	0.014	
Copper	0.029		0.065		0.016		0.011	U	0.0090	J	0.015	
Lead	0.030		0.019		0.0050		0.0022	U	0.0030		0.012	
Mercury	0.00039		0.000075		0.000060		0.00014		0.000046	J	0.00016	
Nickel	0.014		0.0080	J	0.0070	J	0.0020	J	0.0060	J	0.017	
Selenium	0.0056	U	0.0056	U	0.0056	U	0.0056	U	0.0056	U	0.0056	U
Silver	0.0020	J	0.0090		0.0060	J	0.0030	J	0.0040	J	0.0010	J
Thallium	0.060	U	0.060	U	0.060	U	0.060	U	0.036	J	0.060	U
Zinc	0.10		0.051		0.053		0.032		0.029		0.062	
Chloride	923		8050		816		1900		1500		1560	
Cyanide	0.0060	U	0.0060	U	0.0060	U	0.0060	U	0.0060	U	0.0060	U
Total Suspended Solids (in mg/L)	233		213		172		30.0		43.0		143	

Notes:
U - Not detected at the PQL
J - Analyte detected below PQL and/or estimated concentration
mg/L - milligrams per Liter

Table 12
Summary of Total Petroleum Hydrocarbons Groundwater Sampling Results
Bay Avenue Terminal
Port Elizabeth
Elizabeth, New Jersey

Client Sample ID:	MW-13	MW-7	MW-2	MW-1	MW-14	MW-6
Veritech Sample ID:	IT030-1	IT030-2	IT030-3	IT030-5	IT030-7	IT030-8
Sampling Date:	10/27/99	10/27/99	10/27/99	10/28/99	10/28/99	10/28/99
Units	mg/L	mg/L	mg/L	mg/L	mg/L	mg/L
Total Rec.Petr. Hydrocarbons	0.86	0.44	0.91	0.92	1.32	1.06

Notes:
mg/L - micrograms per liter

APPENDICES

THE PORT AUTHORITY OF N.Y. & N.J.

MATERIALS ENGINEERING DIVISION
LOW FLOW WELL MONITORING DATA SHEET

PROJECT: PN- BAY AVENUE	JOB NO: CP08-381.030
WELL DESIGNATION: MW-1	DATE: 10/28/99
	CASING DIAMETER: 2" Inch

STATIC WATER LEVEL

	TIME	DISTANCE FROM TOP OF PIPE TO: WATER (FEET)	PRODUCT (FEET)
PRE-PURGE:	0911	8.09'	—
POST PURGE:	1135	8.11'	—

DEPTH OF WELL	14.96	FEET
DEPTH TO WATER	8.09	FEET
DEPTH OF WATER COLUMN	6.87	FEET

WELL PURGE:

TIME	pH (SU)	TEMP (C)	CONDUCTIVITY ~~(umohs/cm)~~	SALINITY (0/00)	TURBIDITY	DISS. O2 (mg/l)
0937	7.01	20.5	6.59 ms/cm	0.34%	10	0.83
0947	7.13	20.6	6.50 ms/cm	0.34%	10	0.76
0956	7.19	21.2	6.05 ms/cm	0.32%	10	0.39
1002	7.20	21.0	6.00 ms/cm	0.31%	0	0.28
1018	7.19	21.2	5.98 ms/cm	0.31%	0	0.30
1020	7.20	21.2	5.95 ms/cm	0.31%	0	0.29
1040	7.21	21.3	5.94 ms/cm	0.31%	0	0.25
1050	7.22	20.7	6.04 ms/cm	0.32%	0	0.25
1100	7.24	21.6	6.00 ms/cm	0.31%	0	0.15

SAMPLED BY: BRADLEY K. GUNN, HCI Bradley K. Gunn 10/28/99

COMMENTS: PID = 0.0
SAMPLING BEGAN @ 1105
FB-2 collected @ 0850

THE PORT AUTHORITY OF N.Y. & N.J.

MATERIALS ENGINEERING DIVISION
LOW FLOW WELL MONITORING DATA SHEET

PROJECT: PN- BAY AVENUE	JOB NO: CP08-381.030
WELL DESIGNATION: MW-2	DATE: 10/27/99
	CASING DIAMETER: 2" Inch

STATIC WATER LEVEL

	TIME	DISTANCE FROM TOP OF PIPE TO: WATER (FEET)	PRODUCT (FEET)
PRE-PURGE:	1525	7.21	—
POST PURGE:	1710	7.50	—

DEPTH OF WELL	12.99	FEET
DEPTH TO WATER	7.21	FEET
DEPTH OF WATER COLUMN	5.78	FEET

WELL PURGE:

TIME	pH (SU)	TEMP (C)	CONDUCTIVITY ~~(umohs/cm)~~	SALINITY (0/00)	TURBIDITY	DISS. O2 (mg/l)
1542	7.18	19.5	3.70 ms/cm	0.18%	441	0.41
1547	7.32	19.9	3.39 ms/cm	0.17%	869	0.45
1557	7.37	19.5	3.40 ms/cm	0.17%	680	0.41
1607	7.41	20.3	3.35 ms/cm	0.16%	523	0.91
1617	7.41	20.1	3.28 ms/cm	0.16%	510	0.67
1627	7.42	20.4	3.36 ms/cm	0.16%	482	0.38
1637	7.46	19.7	3.29 ms/cm	0.16%	236	0.70
1647	7.45	20.3	3.26 ms/cm	0.16%	390	0.88

SAMPLED BY: BRADLEY K. GUNN, HCI Bradley K. Gunn 10/27/99

COMMENTS: PID = 0.0
SAMPLING BEGAN @ 1648
DUPLICATE SAMPLE COLLECTED

THE PORT AUTHORITY OF N.Y. & N.J.

MATERIALS ENGINEERING DIVISION
LOW FLOW WELL MONITORING DATA SHEET

PROJECT: PN- BAY AVENUE	JOB NO: CP08-381.030
WELL DESIGNATION: MW-4	DATE: 10/29/99
	CASING DIAMETER: 2" Inch

STATIC WATER LEVEL

		DISTANCE FROM TOP OF PIPE TO:	
	TIME	WATER (FEET)	PRODUCT (FEET)
PRE-PURGE:	4:32	4.31	—
POST PURGE:			

DEPTH OF WELL	11.30	FEET
DEPTH TO WATER	4.81	FEET
DEPTH OF WATER COLUMN	6.49	FEET

WELL PURGE:

TIME	pH (SU)	TEMP (C)	CONDUCTIVITY (umohs/cm)	SALINITY (0/00)	TURBIDITY	DISS. O2 (mg/l)
1450	7.26	20.3	7.23 ~~0.011 mS/cm~~	0.39%	999	

SAMPLED BY: BRADLEY K. GUNN, HCI [signature] 10/29/99

COMMENTS: PID = 0.3
POOR RECHARGE - WELL WENT DRY - COULD NOT SAMPLE

THE PORT AUTHORITY OF N.Y. & N.J.

MATERIALS ENGINEERING DIVISION
LOW FLOW WELL MONITORING DATA SHEET

PROJECT: PN- BAY AVENUE	JOB NO: CP08-381.030
WELL DESIGNATION: MN-7	DATE: 10/27/10
	CASING DIAMETER: 2" Inch

STATIC WATER LEVEL

	TIME	DISTANCE FROM TOP OF PIPE TO: WATER (FEET)	PRODUCT (FEET)
PRE-PURGE:	1035	6.11'	—
POST PURGE:	1322	10.98'	—

DEPTH OF WELL	12.82'	FEET
DEPTH TO WATER	6.11'	FEET
DEPTH OF WATER COLUMN	6.71' x .163 = .173 gal	FEET

1 volume

WELL PURGE:

TIME	pH (SU)	TEMP (C)	CONDUCTIVITY ~~(umohs/cm)~~	SALINITY (0/00)	TURBIDITY	DISS. O2 (mg/l)
1049	7.23	19.1	15.5 ms/cm	0.90%	207	0.45
1054	7.28	19.4	15.8 ms/cm	0.92%	219	0.28
1059	7.31	18.7	15.9 ms/cm	0.93%	198	0.24
1105	7.30	18.1	16.0 ms/cm	0.94%	191	0.36
1110	7.31	18.8	16.2 ms/cm	0.95%	215	0.35
1116	7.32	19.3	16.6 ms/cm	0.98%	140	0.30
1126	7.32	18.4	17.5 ms/cm	1.03%	142	0.38
1136	7.32	18.3	17.3 ms/cm	1.08%	31	0.32
1146	7.33	18.1	17.8 ms/cm	1.11%	10	0.75
1156	7.16	19.5	20.3 ms/cm	1.20%	10	0.52
1206	7.33	18.9	20.4 ms/cm	1.22%	36	0.31
1216	7.32	19.3	21.3 ms/cm	1.29%	53	0.24
1226	7.34	19.3	22.1 ms/cm	1.33%	37	0.20
1236	7.33	19.2	22.7 ms/cm	1.37%	178	0.27
1246	7.33	19.3	23.4 ms/cm	1.41%	85	0.23
1256	7.35	19.1	23.7 ms/cm	1.44%	45	0.76
1306	7.34	18.6	23.9 ms/cm	1.45%	51	0.35

SAMPLED BY: BRADBURN NCI [signature] 10/27/10

COMMENTS: PID 0.0 Geotech Water STORED BY BAD SMELL
WE KEEP TO PURGE 10 WELL VOLUMES DUE TO PRICK
SAMPLING EVENT THE POSSIBILITY OF CROSS-CONTAMINATI
WE WILL ~~[illegible]~~ PURGE 10 gal. from EACH WELL PRIOR
TO SAMPLING [illegible]

THE PORT AUTHORITY OF N.Y. & N.J.

MATERIALS ENGINEERING DIVISION
LOW FLOW WELL MONITORING DATA SHEET

PROJECT: PN- BAY AVENUE	JOB NO: CP08-381.030
WELL DESIGNATION: MW-8	DATE: 10/2/09
	CASING DIAMETER: 2" Inch

STATIC WATER LEVEL

	TIME	DISTANCE FROM TOP OF PIPE TO: WATER (FEET)	PRODUCT (FEET)
PRE-PURGE:	1500	9.32'	—
POST PURGE:	1644	9.35'	—

DEPTH OF WELL	15.73'	FEET
DEPTH TO WATER	9.32'	FEET
DEPTH OF WATER COLUMN	6.41'	FEET

WELL PURGE:

TIME	pH (SU)	TEMP (C)	CONDUCTIVITY ~~(umohs/cm)~~	SALINITY (0/00)	TURBIDITY	DISS. O2 (mg/l)
1530	7.13	20.1	4.67 ms/cm	0.24%	306	0.45
1542	7.32	20.3	4.67 ms/cm	0.24%	262	0.29
1551	7.37	20.5	4.66 ms/cm	0.24%	70	0.26
1600	7.40	20.3	4.67 ms/cm	0.24%	54	0.30
1610	7.41	20.4	4.64 ms/cm	0.24%	0	0.33
1620	7.43	20.3	4.63 ms/cm	0.24%	0	0.35
1630	7.44	20.4	4.62 ms/cm	0.23%	0	0.34

SAMPLED BY: Brandt K. Gunn, M.I. Bradley, K. Gunn 10/2/09

COMMENTS: PID: 0.4
SAMPLING BEGAN @ 1635

THE PORT AUTHORITY OF N.Y. & N.J.

MATERIALS ENGINEERING DIVISION

LOW FLOW WELL MONITORING DATA SHEET

PROJECT:	PN- BAY AVENUE	JOB NO:	CP08-381.030
WELL DESIGNATION:	MW-13	DATE:	10/27/99
		CASING DIAMETER:	2" Inch

STATIC WATER LEVEL

		DISTANCE FROM TOP OF PIPE TO:	
	TIME	WATER (FEET)	PRODUCT (FEET)
PRE-PURGE:	0858	5.54'	—
POST PURGE:	0959	5.59'	—

DEPTH OF WELL	12.60'	FEET
DEPTH TO WATER	5.54'	FEET
DEPTH OF WATER COLUMN	7.06	FEET

WELL PURGE:

TIME	pH (SU)	TEMP (C)	CONDUCTIVITY ~~(umohs/cm)~~	SALINITY (0/00)	TURBIDITY	DISS. O2 (mg/l)
0914	7.00	18.4	4.27 ms/cm	0.21%	751	0.74
0920	7.06	18.6	3.88 ms/cm	0.19%	385	0.52
0925	7.10	19.4	3.49 ms/cm	0.17%	469	0.28
0930	7.13	19.6	3.44 ms/cm	0.17%	543	0.33
0935	7.14	19.5	3.42 ms/cm	0.17%	344	0.26
0941	7.16	19.6	3.42 ms/cm	0.17%	418	0.21

SAMPLED BY: BRADLEY K. GUNN Bradley K. Gunn, HCI 10/27/99

COMMENTS: PID = 0.0

SAMPLING BEGAN @ 0944

THE PORT AUTHORITY OF N.Y. & N.J.

MATERIALS ENGINEERING DIVISION
LOW FLOW WELL MONITORING DATA SHEET

PROJECT: PN- BAY AVENUE	JOB NO: CP08-381.030
WELL DESIGNATION: MN-14	DATE: 8/28/99
	CASING DIAMETER: 2" Inch

STATIC WATER LEVEL

	TIME	DISTANCE FROM TOP OF PIPE TO: WATER (FEET)	PRODUCT (FEET)
PRE-PURGE:	1235	9.29'	—
POST PURGE:	1418	9.05'	—

DEPTH OF WELL	12.95	FEET
DEPTH TO WATER	9.29	FEET
DEPTH OF WATER COLUMN	7.66	FEET

WELL PURGE:

TIME	pH (SU)	TEMP (C)	CONDUCTIVITY (~~umohs/cm~~)	SALINITY (0/00)	TURBIDITY	DISS. O2 (mg/l)
1258	7.30	18.8	5.30 ms/cm	0.31%	0	0.68
1308	7.38	18.8	5.31 ms/cm	0.28%	0	0.35
1319	7.41	19.1	5.31 ms/cm	0.27%	0	0.31
1329	7.44	18.9	5.49 ms/cm	0.28%	0	0.42
1339	7.44	18.8	5.42 ms/cm	0.28%	0	0.32
1350	7.45	18.7	5.34 ms/cm	0.28%	0	0.32
1400	7.45	19.1	5.32 ms/cm	0.27%	0	0.26

SAMPLED BY: BRADLEY K. GUNN, HCI [signature] 10/28/99

COMMENTS: PID = 0.4
SAMPLING BEGAN @ 1400

PA 547
6-90

THE PORT AUTHORITY OF NY & NJ

Engineering Department
Construction Division
Materials Engineering Section

BORING REPORT

SHEET 1 OF 4

PROJECT	NAME OF CONTRACTOR	BORING NO.	SURFACE ELEV.
P.E. BAY AVE TERMINAL	CRAIG	MW-1	
LOCATION		**CONTRACT NO.**	**DATE**
LAID OUT IN THE FIELD AS PER DRAWING		426-99-006	9-23-99

SPOON	CASING SIZE	HOLE TYPE
2" O.D. 1 3/8" I.D.	H.S. Augers	"A" MW

HAMMER (SAFETY)	HAMMER
140 # FALL 30"	# FALL "

DRILLER: S. BURNS

INSPECTOR: M. OUDEH

GROUND WATER LEVEL

Date	Time	Depth	Remarks
9/23	AM	7.6'	Found in S#4

CASING BLOWS/FT.	DEPTH	SPOON BLOWS/6"	RE-COV'D	SAMP. NO.	SAMPLE DESCRIPTION AND REMARKS (LINE LOCATES CHANGE OF PROFILE)	
H.S.	0				ASPHALT PAVEMENT	0.5
		Hand	full		CRUSHED ROCK	
Augers		Auger		1	Fill br m-f Sand, tr. gravel, tr. silt	
				2	Same	
	5			3	Same	
		11-11	21"		Same	
		10-10		4		
		10-6	20"		Same	
		5-6		5		
	10	3-1	20"	6 A	Fill br-gray c-f Sand	11.5
		3-2		B	Misc. fill red br. silty clay, tr. fine sand	
		2-1	13"	7	Same	
		1-1				
	15	1-1	15"	8	Misc. fill gray clayey silt, some fine sand	15.5
		1			Bottom OF Boring	
	20				NOTE: All samples were screened for VOC's with A PID. S#1 (1'-2') and S#4 (6'-7') were saved, the remaining samples were discarded	

THE PORT AUTHORITY OF N.Y & N.J.

ENGINEERING DEPARTMENT

MATERIALS ENGINEERING DIVISION

PID READINGS

PROJECT: PE BAY AVE TERMINAL

BORING No. MW-1 DATE: 9-23-99

FIELD READINGS BY: M. OLDEH PID Model: MINI RAE

TIME	SAMPLE No.	IN-SITU Split Spoon Reading	HEAD-Space Reading	BREATHING Zone Reading	REMARKS
AM	1	—	0	0	
	2	—	0	0	
	3	—	0	0	
	4	—	0	0	
	5	—	0	0	
	6A	—	0	0	
	6B	—	0	0	
	7	—	0	0	
	8	—			

PORT AUTHORITY OF NY & NJ
Engineering Department - Materials Division

Well Installation Report

Sheet 3 of 4

PROJECT				CONTRACT NO.
P.E. BAY AVE TERMINAL				426-99-006
LOCATION				CONTRACTOR
LAID OUT IN THE FIELD AS PER DRAWING				CRAIG
WELL NO.	WELL TYPE	INSPECTOR	DRILLER	DATE
MW-1	"A" MONITOR	M. OUDEH	S. BURNS	9-23-99

Well Development Report

(NOTE: WATER LEVEL READINGS FROM TOP OF PVC)

DATE			
9/23/99	WATER LEVEL BEFORE 8.0'	WATER LEVEL AFTER 7.9'	TAKEN 60 MINUTES AFTER

2 " dia. PVC pipe w/ locking cap

L1 = 0.3'

L2 = 4.7'

L3 = 10'

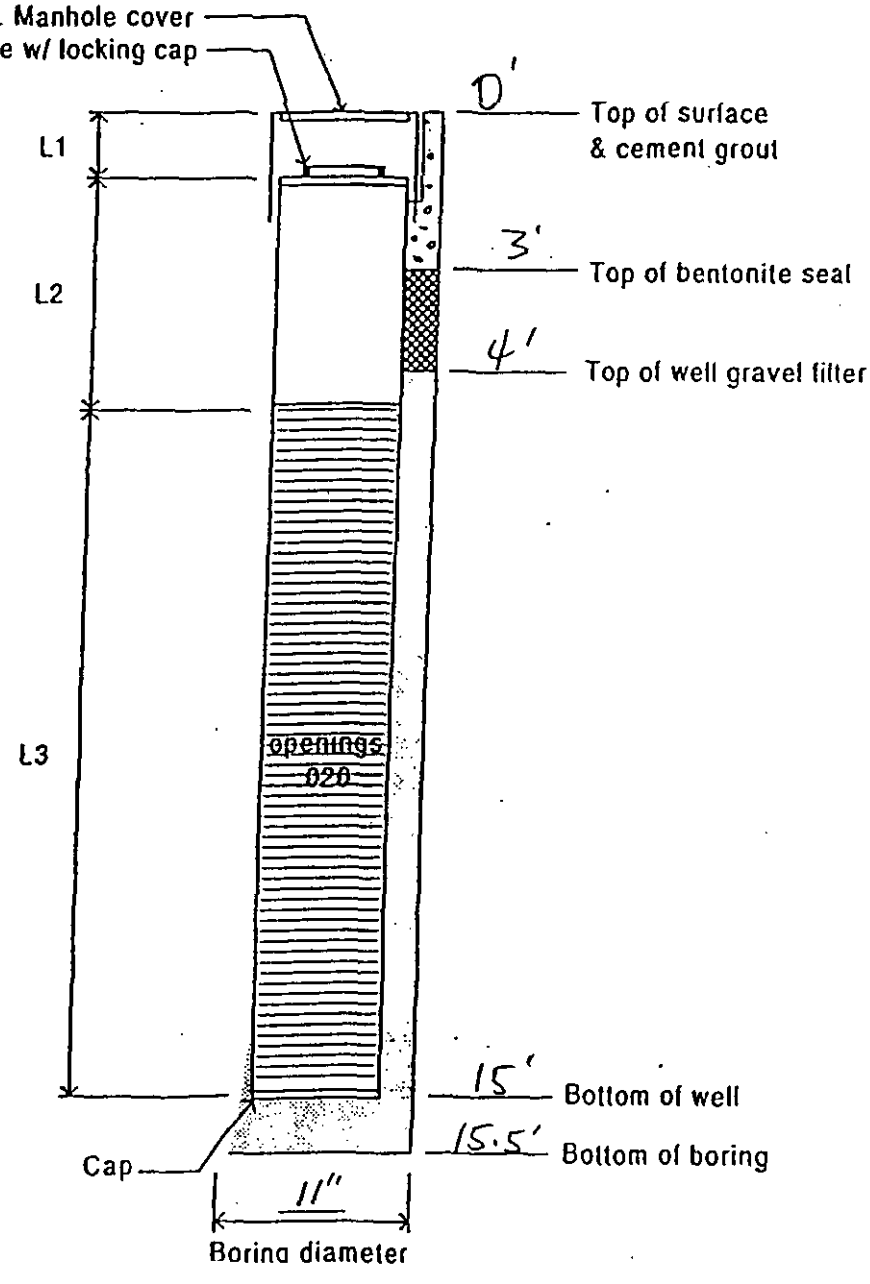

THE PORT AUTHORITY OF N.Y & N.J.

ENGINEERING DEPARTMENT
MATERIALS ENGINEERING DIVISION
CHAIN OF CUSTODY RECORD

Sheet 4 of 4

JECT: DE BAY AVE TERMINAL

ATION: Laid out in the field as per drawing | DATE: 9/23/99

ING No: MW-1 | TOTAL No. OF SAMPLES: 2

ATURE OF ALL
ENT AT SAMPLING

QUISHED	DATE 9/23/99	RECEIVED
IGN)	TIME	BY (SIGN)
QUISHED	DATE	RECEIVED
IGN)	TIME	BY (SIGN)
QUISHED	DATE	RECEIVED
GN)	TIME	BY LAB

RKS: 1'-2' Vial # NJ826009179 9-2

6'-7' 5

Samples taken in 2 one pt. Jars & 2 4 oz Jars

PA 547
6-90

THE PORT AUTHORITY OF NY & NJ

Engineering Department
Construction Division
Materials Engineering Section

BORING REPORT

SHEET 1 OF 4

PROJECT	NAME OF CONTRACTOR	BORING NO.	SURFACE ELEV.
P.E. Bay Ave Terminal	CRAIG	MW-2	
LOCATION		**CONTRACT NO.**	**DATE**
LAID OUT IN THE FIELD AS PER DRAWING		426.99-006	9-22-99

SPOON	CASING SIZE	HOLE TYPE
2" O.D. 1 3/8" I.D.	H.S. Augers	"A" Nextor

HAMMER (SAFETY)	HAMMER
140 # FALL 30"	# FALL "

DRILLER: S. BURNS

INSPECTOR: M. OUDEH

GROUND WATER LEVEL

Date	Time	Depth	Remarks
9/22	9:20 Am	5.9'	found in S#3

CASING BLOWS/FT.	DEPTH	SPOON BLOWS/6"	RE-COV'D[1]	SAMP.[2] NO.	[3]SAMPLE DESCRIPTION AND REMARKS LINE LOCATES CHANGE OF PROFILE	
H.S.	0				ASPHALT PAVEMENT	0.5
		HAND			CRUSHED ROCK	1.0
Augers		AUGER	Full	1	Fill br. m-f Sand, tr. gravel, tr. silt	
				2	Misc. fill br. c-f Sand, little brick, tr gravel, tr. silt	
	5			3A	Same	5.2'
				3B	Misc. fill red-br silty clay	
		4-8	20"	4	Misc. fill red-br. silty clay, little m-f Sand, tr. gravel	
		9-7				
		4-5	19"	5	fill br. m-f Sand, tr. gravel, tr. silt	
	10	5-7				10.0
		WOH/12"	6"	6A	Misc. fill red-br silty clay, tr. fine sand	11.0'
		2-1		6B	Misc. fill grey-br. clayey silt, tr. fine sand	
		WOH	24"	7	Same	
						14.0'
	15				Bottom of Boring	
					NOTE: All the samples were screened for VOC's with a PID. S#1 (1'-2') and #3A (4'-5') were Sand and the remaining were discarded.	
	20					

THE PORT AUTHORITY OF N.Y & N.J.

ENGINEERING DEPARTMENT

MATERIALS ENGINEERING DIVISION

PID READINGS

PROJECT: PE BAY AVE TERMINAL

BORING No. MW-2 | DATE: 9-22-99

FIELD READINGS BY: M. OUDEH | PID Model: MINI RAE

TIME	SAMPLE No.	IN-SITU Split Spoon Reading	HEAD-Space Reading	BREATHING Zone Reading	REMARKS
AM	1	–	0	0	
	2	–	0	0	
	3A	–	0	0	
	3B	–	0	0	
	4	–	0	0	
	5	–	0	0	
	6A	–	0	0	
	6B	–	0	0	
	7	–	0	0	

PORT AUTHORITY OF NY & NJ
Engineering Department - Materials Division

Well Installation Report

Sheet 3 of 4

PROJECT: PE BAY AVE TERMINAL				CONTRACT NO.: 426-99-006
LOCATION: LAID OUT IN THE FIELD AS PER DRAWING				CONTRACTOR: CRAIG
WELL NO.: MW-2	WELL TYPE: TYPE "A" MONITOR	INSPECTOR: M. OUDEH	DRILLER: S. BURNS	DATE: 9-22-99

Well Development Report

(NOTE: WATER LEVEL READINGS FROM TOP OF PVC)

DATE: 9/22/99	WATER LEVEL BEFORE: 5.1'	WATER LEVEL AFTER: 5.8'	TAKEN: 60 MINUTES AFTER

L1 = 0.3'

L2 = 2.7'

L3 = 10'

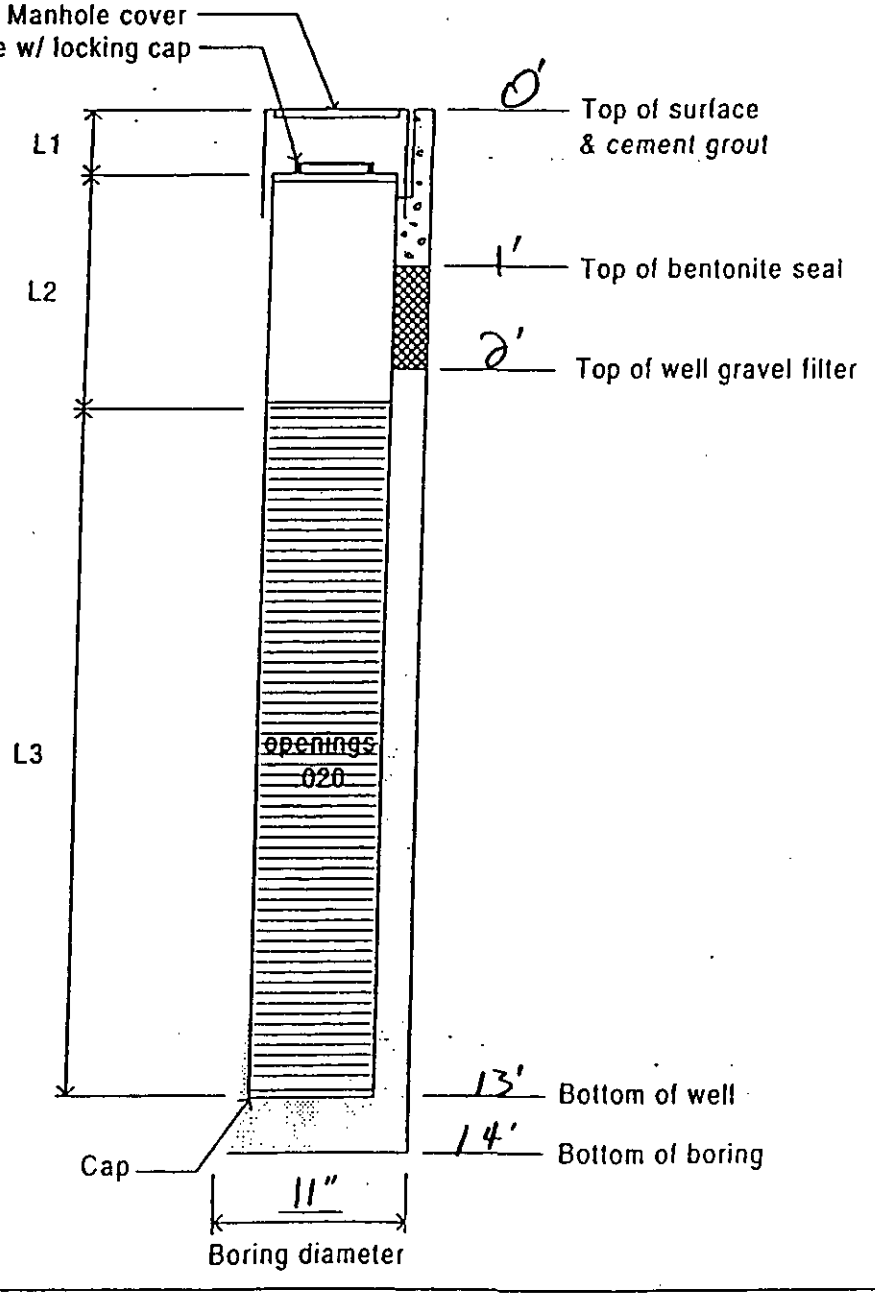

THE PORT AUTHORITY OF N.Y & N.J.

ENGINEERING DEPARTMENT
MATERIALS ENGINEERING DIVISION
CHAIN OF CUSTODY RECORD

PROJECT: P.E. Bay Ave Terminal

LOCATION: Laid out in the field as per drawing | DATE: 9-22-99

BORING No: MW-2 | TOTAL No. OF SAMPLES: 2

SIGNATURE OF ALL PRESENT AT SAMPLING

RELINQUISHED BY (SIGN)	DATE 9-22-99 TIME	RECEIVED BY (SIGN)
RELINQUISHED BY (SIGN)	DATE TIME	RECEIVED BY (SIGN)
RELINQUISHED BY (SIGN)	DATE TIME	RECEIVED BY LAB

REMARKS: 2 samples taken in 2 one pt. Jars
and 2 4 oz Jars for VOA's
Also 2 Vials with meth taken
1'-2' # NJ826009179 9.21
4'-5' # NJ5826D091799.23

PA 547
6-90

THE PORT AUTHORITY OF NY & NJ

Engineering Department
Construction Division
Materials Engineering Section

BORING REPORT

SHEET 1 OF 3

PROJECT: P.E. BAY AVE. TERMINAL	NAME OF CONTRACTOR: CRAIG	BORING NO.: SB-3	SURFACE ELEV.
LOCATION: LAID OUT IN THE FIELD AS PER DRAWING		CONTRACT NO.: 426-99-006	DATE: 9-25-99

SPOON	CASING SIZE	HOLE TYPE
2" O.D. 1 3/8" I.D.	H.S. Augers	

HAMMER (SAFETY)	HAMMER
140# FALL 30"	# FALL "

DRILLER: S. BURNS

INSPECTOR: M. OUDEH

GROUND WATER LEVEL

Date	Time	Depth	Remarks
9/25/99	Am	8.0'	Found in S#4

CASING BLOWS/FT.	DEPTH	SPOON BLOWS/6"	RE-COV'D	SAMP. NO.	SAMPLE DESCRIPTION AND REMARKS — LINE LOCATES CHANGE OF PROFILE	
H.S.	0				ASPHALT PAVEMENT	0.5'
					CRUSHED ROCK	1.0'
Augers		HAND AUGER	Full	1	Misc. Fill br. c-f Sand, Some cobbles, tr. Silt	
				2 A		
				B	Fill br. m-f Sand, tr. gravel, tr. Silt	
	5			3	Same	
		14-16	16"	4	Same	
		14-16				8.0'
	10				Bottom of Boring	
					NOTE: All Samples were screened for VOC's with a PID. S#1 (1'-2') and S# (6'-7.5') were saved and the remaining were discarded.	
	15					
	20					

THE PORT AUTHORITY OF N.Y & N.J.

ENGINEERING DEPARTMENT

MATERIALS ENGINEERING DIVISION

PID READINGS

PROJECT: PE BAY AVE. TERMINAL

BORING No. SB-3 DATE: 9/25/99

FIELD READINGS BY: M. OUDEH PID Model: MINI RAE

TIME	SAMPLE No.	IN-SITU Split Spoon Reading	HEAD-Space Reading	BREATHING Zone Reading	REMARKS
AM	1	–	0	0	
	2A	–	0	0	
	2B	–	0	0	
	3	–	0	0	
	4	–	0	0	

THE PORT AUTHORITY OF N.Y & N.J.

ENGINEERING DEPARTMENT
MATERIALS ENGINEERING DIVISION
CHAIN OF CUSTODY RECORD

Sheet 3 of 3

PROJECT: P.E. Bay Ave. Terminal

LOCATION: Laid out in the field as per drawing | DATE: 9/25/99

BORING No: SB-3 | TOTAL No. OF SAMPLES: 2

SIGNATURE OF ALL PRESENT AT SAMPLING

RELINQUISHED BY (SIGN)	DATE 9/25/99 TIME	RECEIVED BY (SIGN)
RELINQUISHED BY (SIGN)	DATE TIME	RECEIVED BY (SIGN)
RELINQUISHED BY (SIGN)	DATE TIME	RECEIVED BY LAB

REMARKS: 2 Samples taken in 2 ore pt. JARS and 2 4 oz JARS for VOA's

Sample #1 (1'-2') Vial # NJ8260092499-17

Sample # (6'-7.5') Vial # 18

PA 547
6-90

THE PORT AUTHORITY OF NY & NJ

Engineering Department
Construction Division
Materials Engineering Section

BORING REPORT

SHEET 1 OF 4

PROJECT: NJ Bay Ave Terminal	NAME OF CONTRACTOR: Craig	BORING NO.: MW-4	SURFACE ELEV.:
LOCATION: Laid out in the field as per drawing		CONTRACT NO.: 426-99-006	DATE: 9-22-99

SPOON	CASING SIZE	HOLE TYPE
2" O.D. 1 3/8" I.D.	H.S. Augers	"A" Monitor

HAMMER	HAMMER
(safety) 140# FALL 30"	# FALL "

DRILLER: S. Burns

INSPECTOR: M. Oudeh

GROUND WATER LEVEL

Date	Time	Depth	Remarks
9/22	Am	5.0'	found in S#3

CASING BLOWS/FT.	DEPTH	SPOON BLOWS/6"	RE-COV'D	SAMP. NO.	*SAMPLE DESCRIPTION AND REMARKS — LINE LOCATES CHANGE OF PROFILE	
H.S.	0				Asphalt	0.5'
					Crushed Rock	1.0'
Augers		hand	full	1	fill br. c-f Sand, tr. gravel, tr. Silt	
		auger		2 A	Misc fill br. c-f Sand, little brick, little gravel, tr. Silt	
				B	Misc. fill red-br. silty clay, tr. fine sand	4.7'
	5			3 A	Same	
				B	fill br-grey m-f Sand, tr. gravel, tr. silt	5.9'
		2-3	20"		same	6.8'
		3-2		4	Misc. fill red-br silty clay	
		3-3	22"	5	Misc. fill red-br. clayey silt, little fine sand	
	10	3-3				
		1-1	21"	6	Misc. fill red-br. clayey silt, some m-f sand, tr. gravel	
		2-3				12.0'
					Bottom of Boring	
	15				NOTE: All samples were screened for VOC's with a PID. S#1 (1'-2') and S#2A 3.5'-4' were saved and the remaining were discarded.	
	20					

THE PORT AUTHORITY OF N.Y & N.J.

ENGINEERING DEPARTMENT

MATERIALS ENGINEERING DIVISION

PID READINGS

PROJECT: P.E. BAY AVE TERMINAL

BORING No. MW-4 DATE: 9/22/99

FIELD READINGS BY: M. OUDEH PID Model: MINI RAE

TIME	SAMPLE No.	IN-SITU Split Spoon Reading	HEAD-Space Reading	BREATHING Zone Reading	REMARKS
AM	1	—	0	0	
Pm	2A	—	0	0	
	2B	—	0	0	
	3A	—	0	0	
	3B	—	0	0	
	4	—	0	0	
	5	—	0	0	
	6	—	0	0	

PORT AUTHORITY OF NY & NJ
Engineering Department - Materials Division

Well Installation Report

Sheet 3 of 4

PROJECT: PE BAY AVE TERMINAL				CONTRACT NO. 426-99-006
LOCATION: LAID OUT IN THE FIELD AS PER DRAWING				CONTRACTOR: CRAIG
WELL NO. MW-4	WELL TYPE "A" MONITOR	INSPECTOR M. OUDEH	DRILLER S. BURNS	DATE 9/22/99

Well Development Report

(NOTE: WATER LEVEL READINGS FROM TOP OF PVC)

DATE 9/22/99	WATER LEVEL BEFORE 4.9'	WATER LEVEL AFTER 5.1'	TAKEN 60 MINUTES AFTER

2" dia. PVC pipe w/ locking cap

L1 = 0.3'

L2 = 2.7'

L3 = 9.0'

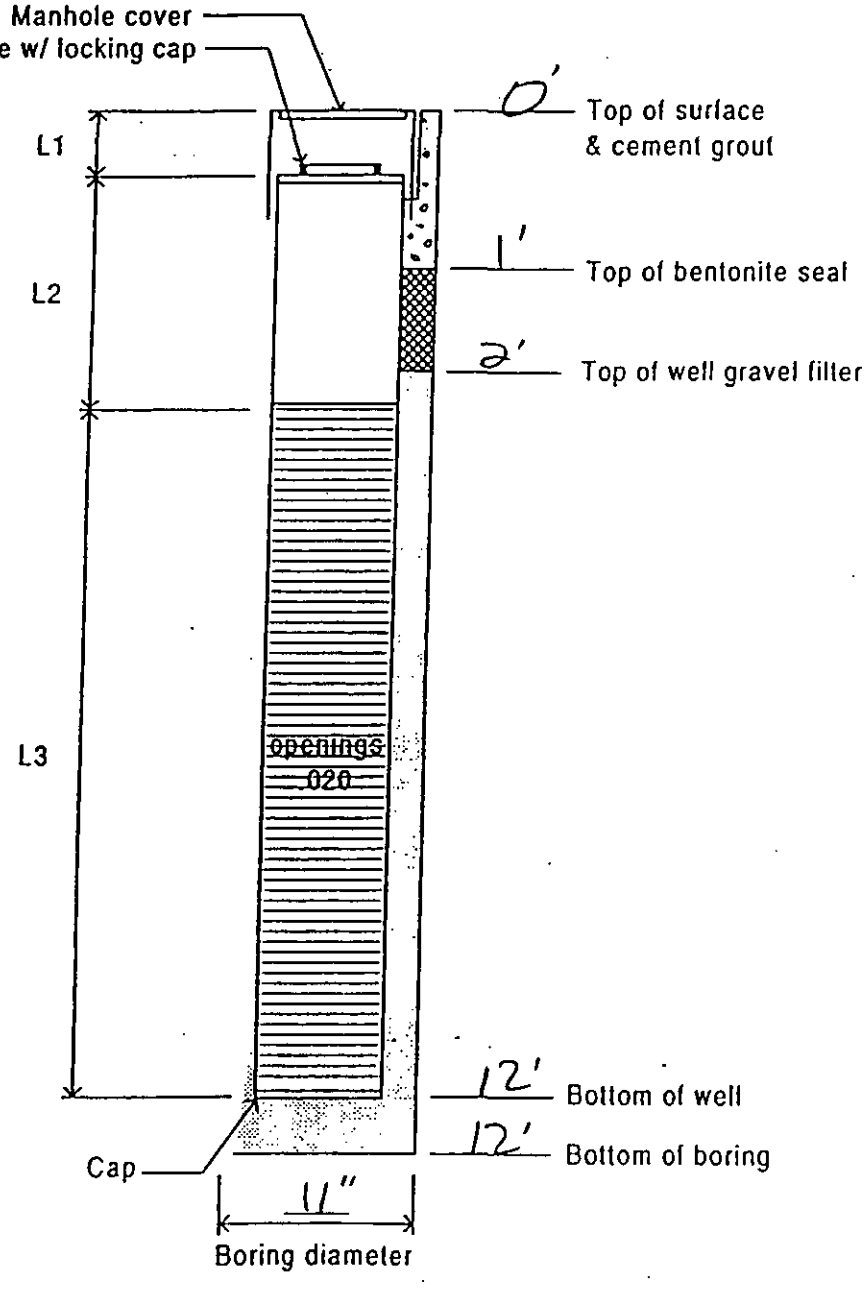

THE PORT AUTHORITY OF N.Y & N.J.

ENGINEERING DEPARTMENT
MATERIALS ENGINEERING DIVISION
CHAIN OF CUSTODY RECORD

PROJECT: P.E. Bay Ave Terminal

LOCATION: Laid out in the field as per drawing | DATE: 9-22-99

BORING No: MW-4 | TOTAL No. OF SAMPLES: 2

SIGNATURE OF ALL PRESENT AT SAMPLING

RELINQUISHED BY (SIGN)	DATE 9/22/99 TIME	RECEIVED BY (SIGN)
RELINQUISHED BY (SIGN)	DATE TIME	RECEIVED BY (SIGN)
RELINQUISHED BY (SIGN)	DATE TIME	RECEIVED BY LAB

REMARKS: Two Samples taken in Two one pt. Jars and Two 4 oz Jars for VOC's

ALSO:

Sample 1'-2' Vial # NJ826 0091799-20

3.5'-4' Vial # ——— -22

PA 547
-90

THE PORT AUTHORITY OF NY & NJ

Engineering Department
Construction Division
Materials Engineering Section

BORING REPORT

SHEET 1 OF 3

PROJECT: P.E. BAY AVE. TERMINAL	NAME OF CONTRACTOR: CRAIG	BORING NO.: SB-5	SURFACE ELEV.
LOCATION: Laid out in the field as per drawing		CONTRACT NO.: 426-99.006	DATE: 9-25-99

SPOON	CASING SIZE	HOLE TYPE
2 "O.D. 1 3/8 "I.D.	4 1/4 S. Augers	

HAMMER (Safety)	HAMMER
140 # FALL 30"	# FALL "

DRILLER: S. BURNS

INSPECTOR: M. Oudeh

GROUND WATER LEVEL

Date	Time	Depth	Remarks
9/25	AM	9.6'	found in S#5

CASING BLOWS/FT.	DEPTH	SPOON BLOWS/6"	RE-COV'D [1]	SAMP. NO. [2]	SAMPLE DESCRIPTION AND REMARKS LINE LOCATES CHANGE OF PROFILE
4 1/4	0	HAND			ASPHALT PAVEMENT 0.4'
Augers		AUGER	Full	1	CRUSHED ROCK 1.0 — Fill br. m-f Sand, tr. gravel, tr. Silt
				2	Same
	5			3	Same
		9-9	20"	4	Same
		10-22			
		23-30	19"	5	Same
	10	26-54			10.0' Bottom of Boring
	15				NOTE: All samples were screened for VOCs with a PID. S#1 (1'-2') and S#5 (8'-9') were saved and the remaining were discarded
	20				

THE PORT AUTHORITY OF N.Y & N.J.

ENGINEERING DEPARTMENT

MATERIALS ENGINEERING DIVISION

PID READINGS

Sheet 2 of 3

PROJECT: P.E. BAY AVE. TERMINAL

BORING No. SB-5 DATE: 9/25/99

FIELD READINGS BY: M. OUDEH PID Model: MINI RAE

TIME	SAMPLE No.	IN-SITU Split Spoon Reading	HEAD-Space Reading	BREATHING Zone Reading	REMARKS
AM	1	—	0	0	
	2	—	0	0	
	3	—	0	0	
	4	—	0	0	
	5	—	0	0	

THE PORT AUTHORITY OF N.Y & N.J.

ENGINEERING DEPARTMENT
MATERIALS ENGINEERING DIVISION
CHAIN OF CUSTODY RECORD

Sheet 3 of 3

'ROJECT: P.E. BAY AVE. TERMINAL

OCATION: Laid out in the field as per drawing | DATE: 9/25/99

ORING No: SB-5 | TOTAL No. OF SAMPLES: 2

IGNATURE OF ALL
RESENT AT SAMPLING

ELINQUISHED BY (SIGN)	DATE 9/25/99 TIME	RECEIVED BY (SIGN)
ELINQUISHED Y (SIGN)	DATE TIME	RECEIVED BY (SIGN)
ELINQUISHED Y (SIGN)	DATE TIME	RECEIVED BY LAB

EMARKS: 2 Samples taken in 2 one pt. Jars & 2 4 oz Jars for VOA's

Vial # NJ8260092499-11 Sample 1'-2'

Vial # NJ8260092499-10 Sample 8'-9'

PA 547
-90

THE PORT AUTHORITY OF NY & NJ

Engineering Department
Construction Division
Materials Engineering Section

BORING REPORT

SHEET 1 OF 3

PROJECT: P.E. BAY AVE. TERMINAL	NAME OF CONTRACTOR: CRAIG	BORING NO.: SB-6	SURFACE ELEV.
LOCATION: LAID OUT IN THE FIELD AS PER DRAWING		CONTRACT NO.: 426-99-006	DATE: 9-23-99

SPOON	CASING SIZE	HOLE TYPE
2 "O.D. 1 3/8 "I.D.	H.S. Augers	II

HAMMER (SAFETY)	HAMMER
140 # FALL 30"	# FALL "

DRILLER: S. BURNS

INSPECTOR: M. OUDEH

GROUND WATER LEVEL

Date	Time	Depth	Remarks
9/23	Am	5.0'	found in S#3b

CASING BLOWS/FT.	DEPTH	SPOON BLOWS/6"	RE-COV'D	SAMP. NO.	*SAMPLE DESCRIPTION AND REMARKS — LINE LOCATES CHANGE OF PROFILE	
H.S. Augers	0				ASPHALT PAVEMENT	0.5'
					CRUSHED ROCK	1.0
		Hand Auger	Full	1	fill br. M-F sand, tr. gravel, tr. silt	
				2	same	
				3 A	same	4.4'
	5			3 B	misc. fill grey clayey silt, little fine sand, tr. gravel	
		6-9 6-5	18"	4	fill br. m-f sand, little silt, tr. gravel	
		3-2 2-2	20"	5	SAME	
	10					10.0'
					Bottom OF Boring	
	15				NOTE: All the samples were screened for VOC's with a PID. S#1 (1'-2') and S# 3A (4'-4.5') were saved and the remaining were discarded.	
	20					

THE PORT AUTHORITY OF N.Y & N.J.

ENGINEERING DEPARTMENT

MATERIALS ENGINEERING DIVISION

PID READINGS

PROJECT: P.E. BAY AVE. TERMINAL

BORING No. SB-6 | DATE: 9-23-99

FIELD READINGS BY: M. OUDEH | PID Model: MINI RAE

TIME	SAMPLE No.	IN-SITU Split Spoon Reading	HEAD-Space Reading	BREATHING Zone Reading	REMARKS
Am	1	—	0	0	
	2	—	0	0	
	3A	—	0	0	
	3B	—	0	0	
	4	—	0	0	
	5	✓	0	0	

THE PORT AUTHORITY OF N.Y & N.J.

ENGINEERING DEPARTMENT
MATERIALS ENGINEERING DIVISION
CHAIN OF CUSTODY RECORD

Sheet 3 of 3

PROJECT: P.E. BAY AVE. TERMINAL

LOCATION: Laid out in the field as per drawing | DATE: 9/23/99

BORING No: SB-6 | TOTAL No. OF SAMPLES: 2

SIGNATURE OF ALL PRESENT AT SAMPLING

RELINQUISHED BY (SIGN)	DATE 9/23/99 TIME	RECEIVED BY (SIGN)
RELINQUISHED BY (SIGN)	DATE TIME	RECEIVED BY (SIGN)
RELINQUISHED BY (SIGN)	DATE TIME	RECEIVED BY LAB

REMARKS: Vial # NJ826009179 9-1 Sample #1 1'-2'

" " 4 Sample #3 4'-4.5'

2 samples taken in 2 one pt. JARS & 2 4 oz JARS

PA 547
6-90

THE PORT AUTHORITY OF NY & NJ

Engineering Department
Construction Division
Materials Engineering Section

BORING REPORT

SHEET 1 OF 4

PROJECT: P.E. BAY AVE. TERMINAL	NAME OF CONTRACTOR: CRAIG	BORING NO.: MW-7	SURFACE ELEV.
LOCATION: Laid out in the field as per drawing		CONTRACT NO.: 426-99-006	DATE: 9-24-99

SPOON	CASING SIZE	HOLE TYPE
2" O.D. 1 3/8" I.D.	H.S. Augers	"A" Monitor
HAMMER (SAFETY) 140 # FALL 30"	HAMMER # FALL "	

DRILLER: S. BURNS

INSPECTOR: M. OUDEH

GROUND WATER LEVEL

Date	Time	Depth	Remarks
9/24	AM	6.0'	Found in S#3

CASING BLOWS/FT.	DEPTH	SPOON BLOWS/6"	RE-COV'D	SAMP. NO.	SAMPLE DESCRIPTION AND REMARKS (LINE LOCATES CHANGE OF PROFILE)	
H.S.	0	HAND	FULL		ASPHALT PAVEMENT	0.5'
Augers		AUGER			CRUSHED ROCK	1.0'
				1	Fill br. m-f sand, tr. gravel, tr. silt	
				2	Same	
	5			3 A	Same	
				B	Misc. fill red-br silty clay, tr. fine sand	5.7'
		2-2	19"	4	Misc. Fill red-br clayey silt, little fine sand	
		2-2				
		2-1	18"	5	Same	
	10	2-2				
		WOH/18"	20"	6	Same	
		1				
		1-2	14"	7	Misc. Fill red-br clayey silt, some fine sand	
		3				13.5'
	15				Bottom of Boring	
					NOTE: All samples were screened for VOC's with a PID. S#1 (1'-2') & S#3 (5'-5.5') were saved and the remaining were discarded.	
	20					

THE PORT AUTHORITY OF N.Y & N.J.

ENGINEERING DEPARTMENT

MATERIALS ENGINEERING DIVISION

PID READINGS

PROJECT: P.E. Bay Ave. Terminal

BORING No. MW-7 DATE: 9/24/99

FIELD READINGS BY: M. Qudeh PID Model: Mini RAE

TIME	SAMPLE No.	IN-SITU Split Spoon Reading	HEAD-Space Reading	BREATHING Zone Reading	REMARKS
AM	1	—	0	0	
	2	—	0	0	
	3A	—	0	0	
	3B	—	0	0	
	4	—	0	0	
	5	—	0	0	
	6	—	0	0	
	7	—	0	0	

PORT AUTHORITY OF NY & NJ
Engineering Department - Materials Division

Well Installation Report

Sheet 3 of 4

PROJECT: RE BAY AVE. TERMINAL				CONTRACT NO. 426-99-006
LOCATION: Laid out in the field as per drawing				CONTRACTOR: Craig
WELL NO. MW-7	WELL TYPE "A" Monitor	INSPECTOR M. OUDEH	DRILLER S. BURNS	DATE 9/24/99

Well Development Report (NOTE: WATER LEVEL READINGS FROM TOP OF PVC)

DATE 9/24/99	WATER LEVEL BEFORE 6.1	WATER LEVEL AFTER 6.2'	TAKEN 60 MINUTES AFTER

L1 = 0.3'

L2 = 2.7'

L3 = 10.0'

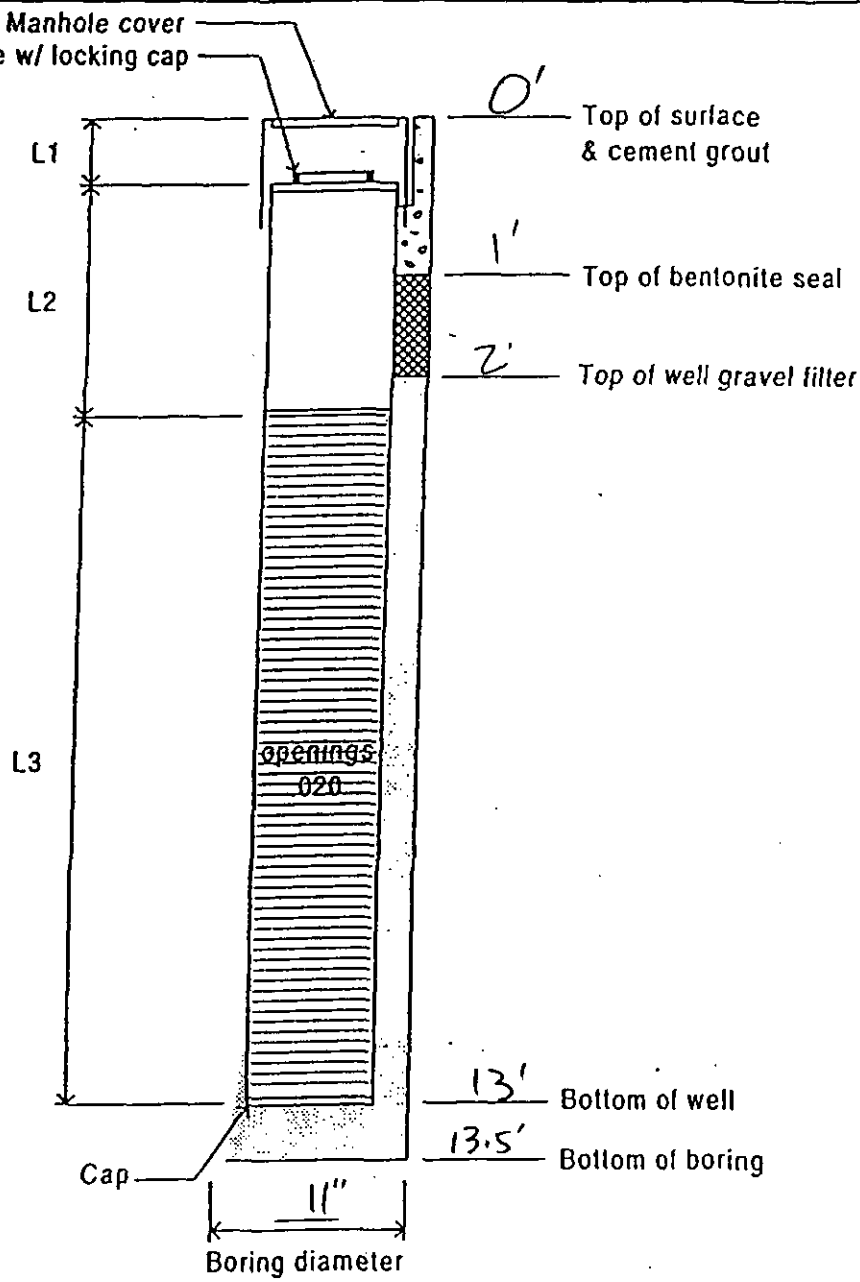

THE PORT AUTHORITY OF N.Y & N.J.

ENGINEERING DEPARTMENT
MATERIALS ENGINEERING DIVISION
CHAIN OF CUSTODY RECORD

PROJECT: P.E. BAY AVE. TERMINAL

LOCATION: Laid out in the field as per drawing | DATE: 9/24/99

BORING No: MW-7 | TOTAL No. OF SAMPLES: 2

SIGNATURE OF ALL PRESENT AT SAMPLING

RELINQUISHED BY (SIGN)	DATE 9/24/99 TIME	RECEIVED BY (SIGN)
RELINQUISHED BY (SIGN)	DATE TIME	RECEIVED BY (SIGN)
RELINQUISHED BY (SIGN)	DATE TIME	RECEIVED BY LAB

REMARKS: Vial # NJ8260091799-12 Sample 1'-2'

8 Sample 5'-5.5'

2 samples taken in 2 one pt. JARS & 2 4oz JARS for VOA's

PA 547
6-90

THE PORT AUTHORITY OF NY & NJ

Engineering Department
Construction Division
Materials Engineering Section

BORING REPORT

SHEET 1 OF 4

PROJECT: P.E. Bay Ave. Terminal	NAME OF CONTRACTOR: Craig	BORING NO.: MW-8	SURFACE ELEV.:
LOCATION: Laid out in the field as per drawing		CONTRACT NO.: 426-99.006	DATE: 9-25-99

SPOON	CASING SIZE	HOLE TYPE
2 "O.D. 1 3/8 "I.D.	H.S. Augers	4" Monitor

HAMMER (Safety) 140 # FALL 30 " HAMMER # FALL "

DRILLER: S. Burns

INSPECTOR: M. Dudek

GROUND WATER LEVEL

Date	Time	Depth	Remarks
9/25	AM	9.5'	Found in S#5

CASING BLOWS/FT.	DEPTH	SPOON BLOWS/6"	RE-COV'D	SAMP. NO.	SAMPLE DESCRIPTION AND REMARKS (LINE LOCATES CHANGE OF PROFILE)
H.S.	0	Hand	Full		Asphalt Pavement 0.5'
					Crushed Rock 1.0'
Auger		Auger		1	Fill tr. m-f sand, tr. gravel, tr. silt
				2	Same
	5			3	Same
		9-12	20"	4	Same
		12-15			
		11-13	19"	5	Same
		18-21			
	10	9-12	19"	6	Fill tr. grey m-f sand, tr. gravel, tr. silt
		13-13			
		8-6	18"	7	Same
		6-6			
	15	2-2	18"	8	Same
		3-3			
					Bottom of Boring 16.5'
	20				

NOTE: All samples were screened for VOC's with a PID. S#1 (1'-2') and S#3 (8'-9') were saved and the remaining were discarded.

THE PORT AUTHORITY OF N.Y & N.J.

ENGINEERING DEPARTMENT
MATERIALS ENGINEERING DIVISION
PID READINGS

PROJECT: P.E. BAY AVE TERMINAL

BORING No. MW-8 | DATE: 9/25/99

FIELD READINGS BY: M. OUDEH | PID Model: MINI RAE

TIME	SAMPLE No.	IN-SITU Split Spoon Reading	HEAD-Space Reading	BREATHING Zone Reading	REMARKS
AM	1	–	0	0	
	2	–	0	0	
	3	–	0	0	
	4	–	0	0	
	5	–	0	0	
	6	–	0	0	
	7	–	0	0	
	8	–	0	0	

PORT AUTHORITY OF NY & NJ
Engineering Department - Materials Division

Well Installation Report Sheet 3 of 4

PROJECT: PE BAY AVE TERMINAL				CONTRACT NO. 426-99-006
LOCATION: Laid out in the field as per drawing				CONTRACTOR: CRAIG
WELL NO. MW-8	WELL TYPE "A" Monitor	INSPECTOR M. QUDEH	DRILLER S. BURNS	DATE 9/25/99

Well Development Report (NOTE: WATER LEVEL READINGS FROM TOP OF PVC)

DATE 9/25/99	WATER LEVEL BEFORE 9.1'	WATER LEVEL AFTER 9.2'	TAKEN 60 MINUTES AFTER

2" dia. PVC pipe w/ locking cap

L1 = 0.3'

L2 = 6.2'

L3 = 10.0'

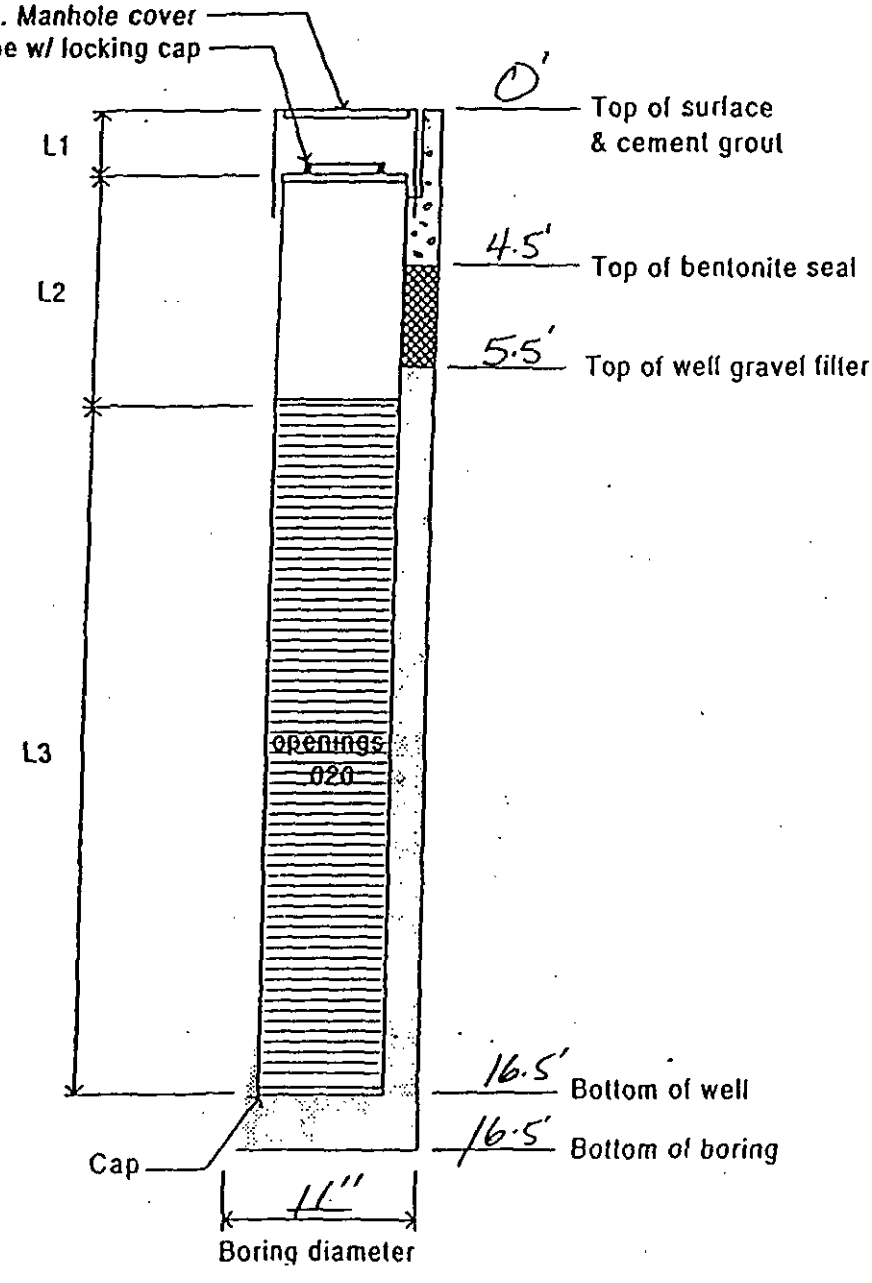

THE PORT AUTHORITY OF N.Y & N.J.

ENGINEERING DEPARTMENT
MATERIALS ENGINEERING DIVISION
CHAIN OF CUSTODY RECORD

PROJECT: P.E. BAY AVE TERMINAL

LOCATION: Laid out in the field as per drawing | DATE: 9/25/99

BORING No: MW-8 | TOTAL No. OF SAMPLES: 2

SIGNATURE OF ALL PRESENT AT SAMPLING

RELINQUISHED BY (SIGN)	DATE 9/25/99 TIME	RECEIVED BY (SIGN)
RELINQUISHED BY (SIGN)	DATE TIME	RECEIVED BY (SIGN)
RELINQUISHED BY (SIGN)	DATE TIME	RECEIVED BY LAB

REMARKS: 2 samples taken in 2 one pt. JARS & 2 4 oz JARS for VOA

Sample 1'-2' Vial # NJ8260092499-4

Sample 8'-9' Vial # ——— 5

A 547
6-90

THE PORT AUTHORITY OF NY & NJ

Engineering Department
Construction Division
Materials Engineering Section

BORING REPORT

SHEET 1 OF 3

PROJECT: PE BAY AVE TERMINAL	NAME OF CONTRACTOR: CRAIG	BORING NO.: SB-9	SURFACE ELEV.
LOCATION: LAID OUT IN THE FIELD AS PER DRAWING		CONTRACT NO.: 426-99-006	DATE: 9-22-99

SPOON: 2" O.D. 1 3/8" I.D. | CASING SIZE: H.S. Augers | HOLE TYPE: II

HAMMER (SAFety) 140 # FALL 30" | HAMMER # FALL "

DRILLER: S. BURNS

INSPECTOR: M. OUDEH

GROUND WATER LEVEL

Date	Time	Depth	Remarks
9/22	Pm	5.9'	found in S#3

CASING BLOWS/FT.	DEPTH	SPOON BLOWS/6"	RE-COV'D	SAMP. NO.	SAMPLE DESCRIPTION AND REMARKS (LINE LOCATES CHANGE OF PROFILE)
H.S. Augers	0	Hand Auger	full	1	ASPHALT 0.5' / CRUSHED ROCK 1.0' / Fill br. c-f sand, tr. gravel, tr. silt
				2	Same
	5			3	Same
		4-3 / 3-4	18"	4	Fill br-gray c-f Sand little silt, tr. gravel
		4-4 / 3-3	18"	5	Same
	10				10.0' Bottom of Boring
	15				NOTE: All samples were screened for VOCs with A-PID S#1 (1'-2') and S#3 (4.5'-5.5') were saved and the remaining were discarded.
	20				

THE PORT AUTHORITY OF N.Y & N.J.

ENGINEERING DEPARTMENT

MATERIALS ENGINEERING DIVISION

PID READINGS

Sheet 2 of 3

PROJECT: P.E. BAY AVE TERMINAL

BORING No. SB-9 | DATE: 9-22-99

FIELD READINGS BY: M. OUDEH | PID Model: MINI RAE

TIME	SAMPLE No.	IN-SITU Split Spoon Reading	HEAD-Space Reading	BREATHING Zone Reading	REMARKS
pm	1	–	0	0	
	2	–	0	0	
	3	–	0	0	
	4	–	0	0	
	5	–	0	0	

THE PORT AUTHORITY OF N.Y & N.J.

ENGINEERING DEPARTMENT
MATERIALS ENGINEERING DIVISION
CHAIN OF CUSTODY RECORD

Sheet 3 of 3

PROJECT: PE Bay Ave Terminal

LOCATION: Laid out in the field as per drawing | DATE: 9/22/99

BORING No: SB-9 | TOTAL No. OF SAMPLES: 2

SIGNATURE OF ALL PRESENT AT SAMPLING

RELINQUISHED BY (SIGN)	DATE 9/22/99 TIME	RECEIVED BY (SIGN)
RELINQUISHED BY (SIGN)	DATE TIME	RECEIVED BY (SIGN)
RELINQUISHED BY (SIGN)	DATE TIME	RECEIVED BY LAB

REMARKS: 2 Samples taken in 2 one pt. Jars & 2 4 oz Jars for VOA's.

Also:

1 (1'-2') Vial # NJ8260091799-3

2 (4.5'-5.5') Vial # ——— -19

547
-90

THE PORT AUTHORITY OF NY & NJ

Engineering Department
Construction Division
Materials Engineering Section

BORING REPORT

SHEET 1 OF 3

PROJECT	NAME OF CONTRACTOR	BORING NO.	SURFACE ELEV.
PE BAY AVE. TERMINAL	CRAIG	SB-10	
LOCATION: LAID OUT IN THE FIELD AS PER DRAWING		CONTRACT NO. 426-99-006	DATE 9-23-99

SPOON	CASING SIZE	HOLE TYPE
2" O.D. 1 3/8" I.D.	H.S. Augers	II

HAMMER (SAFETY)	HAMMER
140 # FALL 30"	# FALL "

DRILLER: S. BURNS

INSPECTOR: M. OUDEH

GROUND WATER LEVEL

Date	Time	Depth	Remarks
9/23/99	11:30 Am	5.9'	found in S#3

CASING BLOWS/FT.	DEPTH	SPOON BLOWS/6"	RE-COV'D	SAMP. NO.	SAMPLE DESCRIPTION AND REMARKS (LINE LOCATES CHANGE OF PROFILE)	
H.S.	0				ASPHALT PAVEMENT	0.4'
					CRUSHED ROCK	1.0'
Augers		Hand Auger	Full	1	Fill br. m-f sand, tr. gravel, tr. silt	
				2	Same	
	5			3	Same	
		4-6	16"	4	Fill br-grey m.f sand, tr. gravel, tr. silt	
		7-4				
		2-1	18"	5 A	Same	9.0'
	10	2-2		B	Misc. fill red-br silty clay, tr. fine sand	10.0'
					Bottom of Boring	
	15				NOTE: All SAMPLES WERE SCREENED FOR VOCs with a PID. S#1 (1'-2') and S#3 (5'-5.5') WERE SAVED and the remaining were discarded.	
	20					

THE PORT AUTHORITY OF N.Y & N.J.

ENGINEERING DEPARTMENT
MATERIALS ENGINEERING DIVISION
PID READINGS

Sheet 2 of 3

PROJECT: PE BAY AVE. TERMINAL

BORING No. SB-10 | DATE: 9-23-99

FIELD READINGS BY: M. OUDEH | PID Model: MINI RAE

TIME	SAMPLE No.	IN-SITU Split Spoon Reading	HEAD-Space Reading	BREATHING Zone Reading	REMARKS
AM	1	—	0	0	
	2	—	0	0	
	3	—	0	0	
	4	—	0	0	
	5A	—	0	0	
	5B	—	0	0	

THE PORT AUTHORITY OF N.Y & N.J.

ENGINEERING DEPARTMENT
MATERIALS ENGINEERING DIVISION
CHAIN OF CUSTODY RECORD

Sheet 3 of 3

PROJECT: P.E. BAY AVE TERMINAL

LOCATION: Laid out in the field as per drawing | DATE: 9/23/99

BORING No: SB-10 | TOTAL No. OF SAMPLES: 2

SIGNATURE OF ALL PRESENT AT SAMPLING

RELINQUISHED BY (SIGN)	DATE / TIME	RECEIVED BY (SIGN)
RELINQUISHED BY (SIGN)	DATE / TIME	RECEIVED BY (SIGN)
RELINQUISHED BY (SIGN)	DATE / TIME	RECEIVED BY LAB

REMARKS: Sample #1 (1'-2') Vial # NJ826091799-16
Sample #3 (5'-5.5') ——— 13

2 Samples taken in 2 one pt. JARS & 2 4 oz JARS.

PA 547
6-90

THE PORT AUTHORITY OF NY & NJ

Engineering Department
Construction Division
Materials Engineering Section

BORING REPORT

SHEET 1 OF 3

PROJECT	NAME OF CONTRACTOR	BORING NO.	SURFACE ELEV.
P.E. BAY AVE. TERMINAL	CRAIG	SB-11	
LOCATION: Laid out in the field as per drawing		CONTRACT NO. 426-99-006	DATE 9-25-99

SPOON	CASING SIZE	HOLE TYPE
2" O.D. 1 3/8" I.D.	H.S. Augers	

HAMMER (SAFETY)	HAMMER
140 # FALL 30"	# FALL "

DRILLER: S. Burns

INSPECTOR: M. Oudeh

GROUND WATER LEVEL

Date	Time	Depth	Remarks
9/25/99	Am	9.9'	Found in S#5

CASING BLOWS/FT.	DEPTH	SPOON BLOWS/6"	RE-COV'D[1]	SAMP.[2] NO.	[3]SAMPLE DESCRIPTION AND REMARKS ___ LINE LOCATES CHANGE OF PROFILE
H.S.	0	HAND	Full		ASPHALT PAVEMENT 0.5'
					CRUSHED ROCK 1.0'
augers		AUGER		1	Fill br. m.f. sand, tr. gravel, tr. silt
				2	Same
	5			3	Same
		5-8	18"	4	Same
		9-8			
		10-9	20"	5	Same
		6-13			
	10				10.0' Bottom of Boring
	15				Note: all the samples were screened for VOC's with a PID. Sample #1 (1'-2') and #5 (9'-9.5') were saved and the remaining were discarded.
	20				

THE PORT AUTHORITY OF N.Y & N.J.

ENGINEERING DEPARTMENT
MATERIALS ENGINEERING DIVISION
PID READINGS

PROJECT: P.C Bay AVG Terminal

BORING No. SB-11 | DATE: 9/25/99

FIELD READINGS BY: M DUDEH | PID Model: Mini RAE

TIME	SAMPLE No.	IN-SITU Split Spoon Reading	HEAD-Space Reading	BREATHING Zone Reading	REMARKS
Am	1	–	0	0	
	2	–	0	0	
	3	–	0	0	
	4	–	0	0	
	5	–	0	0	

THE PORT AUTHORITY OF N.Y & N.J.

ENGINEERING DEPARTMENT
MATERIALS ENGINEERING DIVISION
CHAIN OF CUSTODY RECORD

Sheet 3 of 3

PROJECT: PE Bay Ave. Terminal

LOCATION: Laid out in the field as per drawing | DATE: 9/25/99

BORING No: SB-11 | TOTAL No. OF SAMPLES: 2

SIGNATURE OF ALL PRESENT AT SAMPLING

RELINQUISHED BY (SIGN)	DATE 9/25/99 TIME	RECEIVED BY (SIGN)
RELINQUISHED BY (SIGN)	DATE TIME	RECEIVED BY (SIGN)
RELINQUISHED BY (SIGN)	DATE TIME	RECEIVED BY LAB

REMARKS: 2 Samples taken in 2 one pt. Jars & 2 4 oz Jars for VOC's

Vial # NJ8260092499-6 Sample 1'-2'

Vial # ——— 12 Sample 9'-9.5'

PA 547
6-90

THE PORT AUTHORITY OF NY & NJ

Engineering Department
Construction Division
Materials Engineering Section

BORING REPORT

SHEET 1 OF 3

PROJECT: PE Bay Ave. Terminal	NAME OF CONTRACTOR: CRAIG	BORING NO.: SB-12	SURFACE ELEV.
LOCATION: Laid out in the field as per drawing		CONTRACT NO.: 426-99-006	DATE: 9-25-99

SPOON	CASING SIZE	HOLE TYPE
2" O.D. 1 3/8" I.D.	HS. Aug.	

HAMMER (Safety) 140 # FALL 30" — HAMMER # FALL

DRILLER: S. Burns

INSPECTOR: M. Oudeh

GROUND WATER LEVEL

Date	Time	Depth	Remarks
9/25	9am	6.5'	found in S#4

CASING BLOWS/FT.[1]	DEPTH	SPOON BLOWS/6"	RE-COV'D[1]	SAMP.[2] NO.	[3]SAMPLE DESCRIPTION AND REMARKS LINE LOCATES CHANGE OF PROFILE	
HS	0	Hand	Full		Asphalt Pavement	0.4'
					Crushed Rock	1.0'
Augus		Auger		1	Misc. fill br. c-f sand, some cobbles, tr. silt, tr. gravel	
				2	Same	
	5			3	Fill br. m-f sand, tr. gravel, tr. silt	
				4	Same	7.0'
					Bottom of boring	
	10				Note: all samples were screened for VOCs with a PID. S#1 (1'-2') & S#3 (5'-6') were saved & the remaining were discarded.	
	15					
	20					

THE PORT AUTHORITY OF N.Y & N.J.

ENGINEERING DEPARTMENT
MATERIALS ENGINEERING DIVISION
PID READINGS

Sheet 2 of 3

PROJECT: P.E. Bay Ave. Terminal

BORING No. SB-12 DATE: 9-25-99

FIELD READINGS BY: M. OUDEH PID Model: Mini RAE

TIME	SAMPLE No.	IN-SITU Split Spoon Reading	HEAD-Space Reading	BREATHING Zone Reading	REMARKS
PM	1	–	0	0	
	2	–	0	0	
	3	/	0	0	
	4	/	0	0	

THE PORT AUTHORITY OF N.Y & N.J.

ENGINEERING DEPARTMENT
MATERIALS ENGINEERING DIVISION
CHAIN OF CUSTODY RECORD

Sheet 3 of 3

PROJECT: P.E. Bay Ave. Terminal

LOCATION: Laid out in the field as per drawing | DATE: 9/25/99

BORING No: SB-12 | TOTAL No. OF SAMPLES: 2

SIGNATURE OF ALL PRESENT AT SAMPLING

RELINQUISHED BY (SIGN)	DATE 9/25/99 TIME	RECEIVED BY (SIGN)
RELINQUISHED BY (SIGN)	DATE TIME	RECEIVED BY (SIGN)
RELINQUISHED BY (SIGN)	DATE TIME	RECEIVED BY LAB

REMARKS: 2 samples taken in 2 one pt. JARS & 2 4oz JARS for VOA'S.

Sample #1 (1'-2') Vial # NJ826000 92499-1

Sample # 3 (5'-6') 9

1 547
5-90

THE PORT AUTHORITY OF NY & NJ

Engineering Department
Construction Division
Materials Engineering Section

BORING REPORT

SHEET 1 OF 4

PROJECT	NAME OF CONTRACTOR	BORING NO.	SURFACE ELEV.
P.E. BAY AVE. TERMINAL	CRAIG	MW-13	
LOCATION: LAID OUT IN THE FIELD AS PER DRAWING		CONTRACT NO. 426-99-006	DATE 9-23-99

SPOON	CASING SIZE	HOLE TYPE
2" O.D. / 3/8" I.D.	H.S. Augers	"A" M.W.

HAMMER (SAFETY)	HAMMER
140 # FALL 30"	# FALL "

DRILLER: S. BURNS

INSPECTOR: M. OUDEH

GROUND WATER LEVEL

Date	Time	Depth	Remarks
9/23	PM	5.5'	Found in S#3

CASING BLOWS/FT.	DEPTH	SPOON BLOWS/6"	RE-COV'D	SAMP.* NO.	*SAMPLE DESCRIPTION AND REMARKS ___ LINE LOCATES CHANGE OF PROFILE	
H.S.	0				ASPHALT PAVEMENT	0.5'
AUGERS		HAND AUGER	FULL		CRUSHED ROCK	1.0'
				1	fill br. m-f Sand, tr. gravel, tr. silt (NOTE: MATERIAL IS MOIST.)	
				2	fill br. m-f Sand, tr. gravel, tr. silt	
	5			3	Same	
		6-10				
		9-8	19"	4	Same	
		5-6	19"	5	fill br.-grey m-f Sand, tr. gravel, tr. silt	
	10	4-3		A	SAME	10.2'
		1-2	24"	6 B	Misc Fill red-br silty clay, tr. fine Sand	
		1-3				
		WOH	15"	7	SAME	
						14.0'
	15				Bottom of Boring	
					NOTE: All samples were screened for VOC's with a PID. S#1 (1'-2') and S#3 (4.5'-5') were saved and the remaining were discarded.	
	20					

THE PORT AUTHORITY OF N.Y & N.J.

ENGINEERING DEPARTMENT
MATERIALS ENGINEERING DIVISION
PID READINGS

PROJECT: P.E. BAY AVE. TERMINAL

BORING No. MW-13 | DATE: 9-23-99

FIELD READINGS BY: M. OUDEH | PID Model: MINI RAE

TIME	SAMPLE No.	IN-SITU Split Spoon Reading	HEAD-Space Reading	BREATHING Zone Reading	REMARKS
PM	1	–	0	0	
	2	–	0	0	
	3	–	0	0	
	4	–	0	0	
	5	–	0	0	
	6	–	0	0	
	6A	–	0	0	
	7	–	0	0	

ORT AUTHORITY OF NY & NJ
ngineering Department - Materials Division

ell Installation Report

Sheet 3 of 4

OJECT P.E. BAY AVE. TERMINAL				CONTRACT NO. 726-99-006
CATION AID OUT IN THE FIELD AS PER DRAWING				CONTRACTOR CRAIG
L NO. MW-13	WELL TYPE "A" MONITOR	INSPECTOR M. DUDEH	DRILLER S. BURNS	DATE 9-23-99

ell Development Report (NOTE: WATER LEVEL READINGS FROM TOP OF PVC)

ATE 9/23/99	WATER LEVEL BEFORE 5.8'	WATER LEVEL AFTER 5.9'	TAKEN 60 MINUTES AFTER

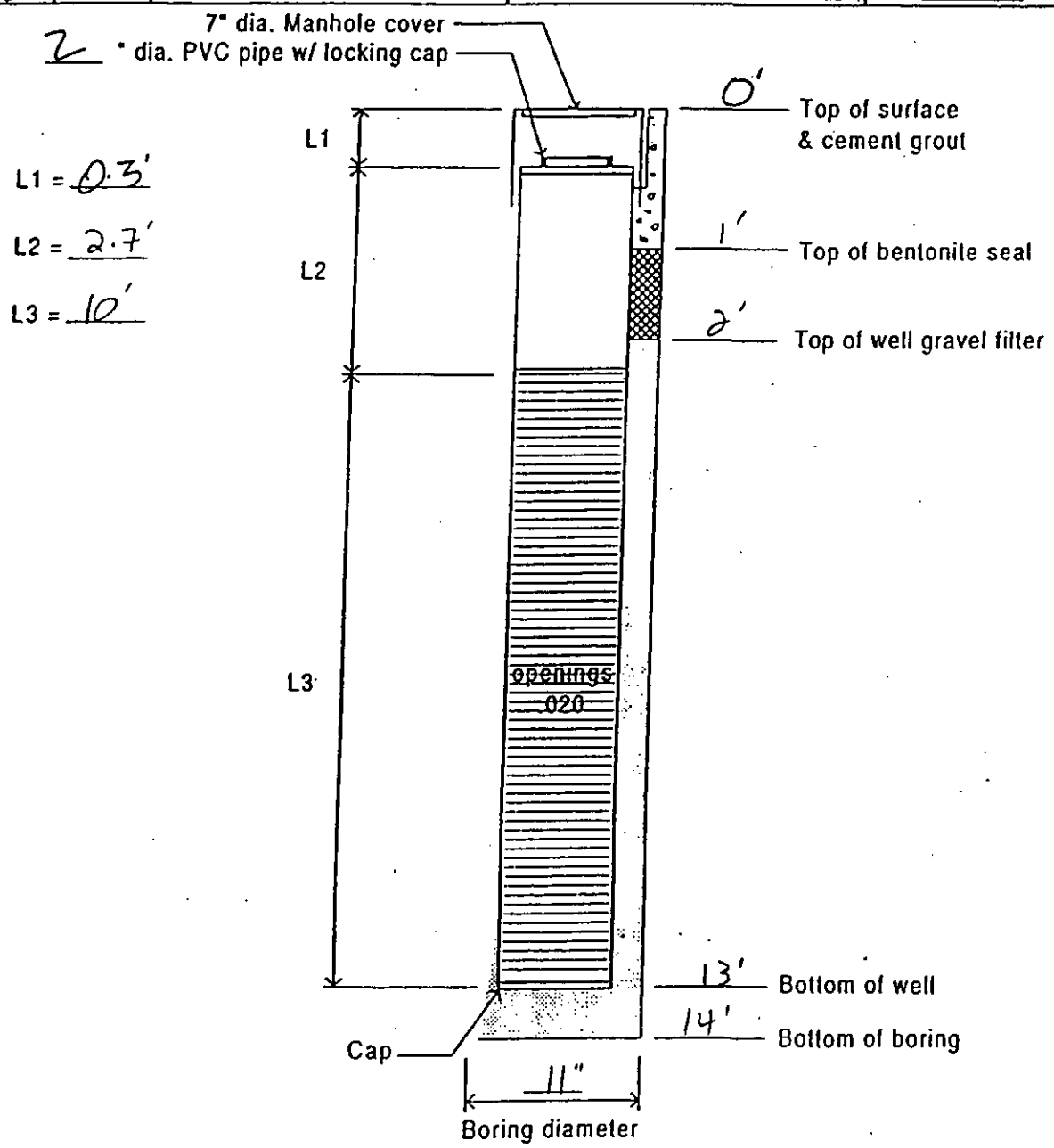

THE PORT AUTHORITY OF N.Y & N.J.

ENGINEERING DEPARTMENT
MATERIALS ENGINEERING DIVISION
CHAIN OF CUSTODY RECORD

Sheet 4 of 4

PROJECT: P.E. Bay Ave. Terminal

LOCATION: Laid out in the field as per drawing | DATE: 9/23/99

BORING No: MW-13 | TOTAL No. OF SAMPLES: 2

SIGNATURE OF ALL PRESENT AT SAMPLING

RELINQUISHED BY (SIGN)	DATE 9/23/99 TIME	RECEIVED BY (SIGN)
RELINQUISHED BY (SIGN)	DATE TIME	RECEIVED BY (SIGN)
RELINQUISHED BY (SIGN)	DATE TIME	RECEIVED BY LAB

REMARKS: Vial # NJ 8260091799-15 Sample #1 (1'-2')

14 Sample #3 (4.5'-5')

2 samples taken in 2 one pt. JARS & 2 4oz JARS.

THE PORT AUTHORITY OF NY & NJ

Engineering Department
Construction Division
Materials Engineering Section

BORING REPORT

SHEET 1 OF 4

BAY AVE TERMINAL	NAME OF CONTRACTOR: CRAIG	BORING NO.: MW-14	SURFACE ELEV.:
out in the feld as per drawing		CONTRACT NO.: 426-99-006	DATE: 9-24-99

	CASING SIZE	HOLE TYPE
O.D. 13/8" I.D.	H.S. Augers	"A" M.W.
SAFETY) HAMMER		
# FALL 30"	# FALL "	

S. BURNS

M. OUDEH

GROUND WATER LEVEL

Date	Time	Depth	Remarks
9/24/99	AM	9.7'	Found in S#5

DEPTH	SPOON BLOWS/6"	RE-COV'D	SAMP. NO.	SAMPLE DESCRIPTION AND REMARKS LINE LOCATES CHANGE OF PROFILE
0				ASPHALT PAVEMENT 0.5'
				CRUSHED ROCK 1.0'
	Hand auger	Full	1	Fill br. m-f Sand, tr. gravel, tr. silt
			2	same
5			3	Fill br. c-f Sand, some gravel, tr. silt
	8-9 12-14	18"	4	Same
	15-15 21-19	20"	5	Same
10	8-9 9-9	17"	6	Same
	5-5 6-6	18"	7	Fill br-grey c-f Sand, tr. gravel, tr. silt
15	3-3 5-6	20"	8	Fill br-grey m-f Sand, tr. gravel, tr. silt
	4-5-6	16"	9	SAME
				17.5' Bottom of BORING
0				NOTE: All the samples were screened for VOC's with a PID. S#1 (1'-2') & S#5 (8'-9') were saved and the remaining were discarded.

THE PORT AUTHORITY OF N.Y & N.J.

ENGINEERING DEPARTMENT

MATERIALS ENGINEERING DIVISION

PID READINGS

Sheet 2 of 4

OJECT: P.E. BAY AVE TERMINAL

ORING No. MW-14 | DATE: 9/24/99

LD READINGS BY: M. OUDEH | PID Model: MINI RAE

TIME	SAMPLE No.	IN-SITU Split Spoon Reading	HEAD-Space Reading	BREATHING Zone Reading	REMARKS
AM	1	—	0	0	
	2	—	0	0	
	3	—	0	0	
	4	—	0	0	
	5	—	0	0	
	6	—	0	0	
	7	—	0	0	
	8	—	0	0	
	9	—	0	0	

ORT AUTHORITY OF NY & NJ
ngineering Department - Materials Division

ll Installation Report

Sheet 3 of 4

OJECT P.E. BAY AVE. TERMINAL				CONTRACT NO. 426-99.006
TION laid out in the field as per drawing				CONTRACTOR CRAIG
ELL NO. MW-14	WELL TYPE "A" MONITOR	INSPECTOR M. OUDEH	DRILLER S. BURNS	DATE 9/24/99

ell Development Report

(NOTE: WATER LEVEL READINGS FROM TOP OF PVC)

24/99	WATER LEVEL BEFORE 9.5'	WATER LEVEL AFTER 9.5'	TAKEN 60 MINUTES AFTER

L1 = 0.3'

L2 = 6.7'

L3 = 10.0'

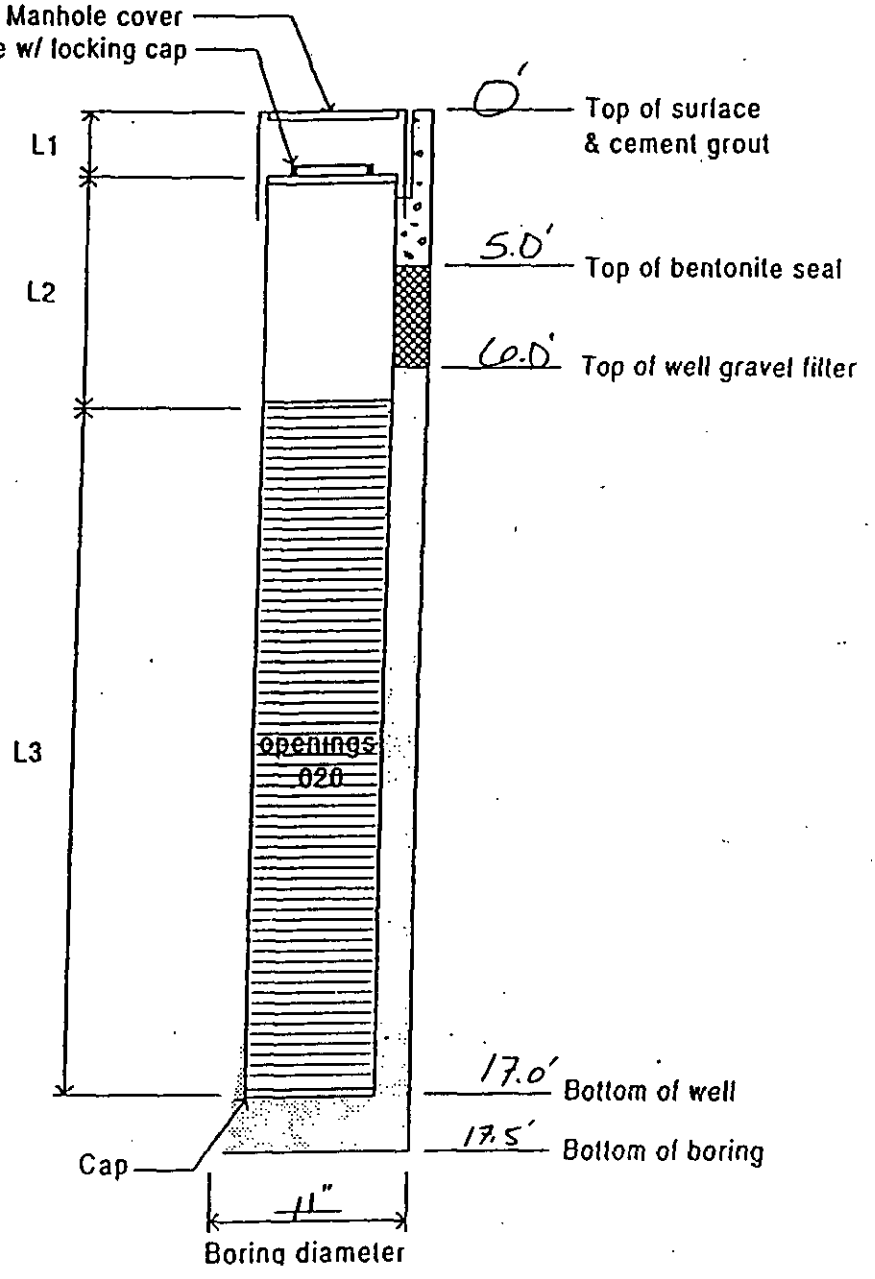

THE PORT AUTHORITY OF N.Y & N.J.

ENGINEERING DEPARTMENT
MATERIALS ENGINEERING DIVISION
CHAIN OF CUSTODY RECORD

Sheet 4 of 4

ROJECT: P.E. Bay Ave. Terminal

CATION: Laid out in the field as per drawing | DATE: 9-24-99

ORING No: MW-14 | TOTAL No. OF SAMPLES: 2

IGNATURE OF ALL ESENT AT SAMPLING

LINQUISHED Y (SIGN)	DATE 9/24/99 TIME	RECEIVED BY (SIGN)
LINQUISHED Y (SIGN)	DATE TIME	RECEIVED BY (SIGN)
LINQUISHED Y (SIGN)	DATE TIME	RECEIVED BY LAB

EMARKS: Vial # NJ8260091799-11 Sample 1'-2'

9 Sample 8'-9'

2 Samples taken in 2 one Qt. JARS & 2 4 oz JARS for VOA's

PA 547
6-90

THE PORT AUTHORITY OF NY & NJ

Engineering Department
Construction Division
Materials Engineering Section

BORING REPORT

SHEET 1 OF 3

PROJECT	NAME OF CONTRACTOR	BORING NO.	SURFACE ELEV.
P.E. BAY AVE. TERMINAL	CRAIG	SB-15	
LOCATION		**CONTRACT NO.**	**DATE**
LAID OUT IN THE FIELD AS PER DRAWING		426-99-006	9-24-99

SPOON	CASING SIZE	HOLE TYPE
2 "O.D. 1 3/8" I.D.	H.S. Augers	

HAMMER (SAFETY)	HAMMER
140 # FALL 30"	# FALL "

DRILLER: S. BURNS

INSPECTOR: M. DUDEH

GROUND WATER LEVEL

Date	Time	Depth	Remarks
9/24	AM	9.1'	Found in S#5

CASING BLOWS/FT.	DEPTH	SPOON BLOWS/6"	RE-COV'D[1]	SAMP.[2] NO.	[3]SAMPLE DESCRIPTION AND REMARKS (LINE LOCATES CHANGE OF PROFILE)
H.S.	0	HAND	FULL		ASPHALT PAVEMENT 0.5'
					CRUSHED ROCK 1.0'
		AUGER		1	Fill br. m-f sand, tr. gravel, tr. silt
				2	Same
	5			3	Same
		9-11	19"	4	Same
		14-14			
		13-13	19"	5	Same
		13-14			
	10				10.0' Bottom of Boring
	15				
	20				

Note: All samples were screened for VOC's with a PID. S#1 (1'-2') & S#5 (8'-8.5') were saved and the remaining were discarded.

THE PORT AUTHORITY OF N.Y & N.J.

ENGINEERING DEPARTMENT

MATERIALS ENGINEERING DIVISION

PID READINGS

ECT: P.E. BAY AVE. TERMINAL

RING No. SB-15 DATE: 9/24/99

READINGS BY: M. OUDEH PID Model: MINI RAE

..ME	SAMPLE No.	IN-SITU Split Spoon Reading	HEAD-Space Reading	BREATHING Zone Reading	REMARKS
3m	1	—	0	0	
	2	—	0	0	
	3	—	0	0	
	4	—	0	0	
	5	—	0	0	

THE PORT AUTHORITY OF N.Y & N.J.

ENGINEERING DEPARTMENT
MATERIALS ENGINEERING DIVISION
CHAIN OF CUSTODY RECORD

Sheet 3 of 3

PROJECT: P.U. Bay Ave. Terminal

LOCATION: Laid out in the field as per dwg. DATE: 9/24/99

BORING No: SB-15 TOTAL No. OF SAMPLES: 2

SIGNATURE OF ALL PRESENT AT SAMPLING

RELINQUISHED BY (SIGN)	DATE 9/24/99 TIME	RECEIVED BY (SIGN)
RELINQUISHED BY (SIGN)	DATE TIME	RECEIVED BY (SIGN)
RELINQUISHED BY (SIGN)	DATE TIME	RECEIVED BY LAB

REMARKS: Vial # NJ8260091799-7 Sample 1'-2'
10 Sample 8'-8.5'

2 samples taken in 2 one pt. JARS & 2 4 oz JARS for VOAs

THE PORT AUTHORITY

OF NEW YORK AND NEW JERSEY

CENTRAL SURVEY GROUP J.S.T.C. 3RD FLOOR

BOREHOLE REPORT

E.P.A.M.T.
CP8-381.030
BAY AVENUE TERMINAL

BORING OR WELL	N J STATE PLANE '27 NORTHING	N J STATE PLANE '27 EASTING	E.P.A.M.T. LOCAL GRID "E" STATION	E.P.A.M.T. LOCAL GRID "F" OFFSET	ELEVATIONS ELEV 300.00' = N.G.V.D. '29 + 2.653' RIM	PVC	GRADE
MW 1	671,903.20	2,144,391.86	63+49.89	7+56.03	308.53	306.24	306.50
MW 2	671,777.17	2,144,274.47	63+37.38	9+27.81	309.41	309.16	309.40
SB 3	671,480.78	2,144,501.21	64+74.22	7+36.16	306.38		306.40
MW 4	671,763.40	2,144,414.45	64+55.09	8+50.83	308.94	308.62	308.90
SB 5	671,825.48	2,144,753.91	66+80.75	5+89.75	307.98		308.00
SB 6	671,239.95	2,144,548.66	68+87.69	11+74.68	308.61		308.60
MW 7	670,809.37	2,144,299.03	69+62.94	16+66.66	308.51	308.14	308.50
MW 8	671,520.51	2,145,117.96	71+55.56	5+99.31	308.19	307.87	308.20
SB 9	670,906.11	2,145,002.59	74+50.63	11+50.42	308.51		308.50
SB 10	670,678.39	2,144,717.59	73+71.21	15+06.47	309.16		309.20
SB 11	671,144.16	2,145,619.18	77+82.00	5+78.55	308.04		308.00
SB 12	670,725.69	2,145,321.26	78+12.04	10+91.35	309.71		309.70
MW 13	670,450.30	2,145,039.71	77+65.18	14+82.39	308.83	308.46	308.80
MW 14	670,801.43	2,145,915.16	82+27.42	6+60.17	308.15	307.85	308.20
SB 15	670,437.68	2,145,675.96	82+68.94	10+93.54	308.19		308.20

WTC-OL 082698

(Port Authority Acknowledgment)

STATE OF NEW YORK

ss:

COUNTY OF NEW YORK

On the 22 day of Nov, 2000, before me personally came Lillian C. Borrone to me known, who, being by me duly sworn, did depose and say that she resides in ; that she is the Asst. Exec. Director of The Port Authority of New York and New Jersey, one of the corporations described in and which executed the foregoing instrument; that she knows the seal of said corporation; that the seal affixed to said instrument is such corporate seal; that it was so affixed by order of the Commissioners of said corporation; and that she signed her name thereto by like order.

KAREN E. EASTMAN
Notary Public, State of New York
No. 01EA4766314
Qualified in New York County
Commission Expires Feb. 28, 2001

Karen E. Eastman

STATE OF New Jersey)
) ss.
COUNTY OF Hudson)

Barbara J. Wurz
Notary Public, State of New Jersey
Registered in Essex County
My Commission Expires July 25, 2001

On the 25th day of Oct. in the year 2000, before me, the undersigned, a Notary Public in and for said state, personally appeared M. Brian Maher, personally known to me or proved to me on the basis of satisfactory evidence to be the individual(s) whose name(s) is (are) subscribed to the within instrument and acknowledged to me that he/she/they executed the same in his/her/their capacity(ies), and that by his/her/their signature(s) on the instrument, the individual(s), or the person upon behalf of which the individual(s) acted, executed the instrument.

Barbara J. Wurz
(notarial seal and stamp)

Port Authority Lease No. EP-249
Supplement No. 1

SUPPLEMENTAL AGREEMENT

THIS AGREEMENT, made as of March 1, 2002, by and between THE PORT AUTHORITY OF NEW YORK AND NEW JERSEY (hereinafter called "the Port Authority") and MAHER TERMINALS, INC. (hereinafter called "the Lessee"),

WITNESSETH, That:

WHEREAS, heretofore and as of October 1, 2000, the Port Authority and the Lessee entered into an agreement of lease (hereinafter called "the Lease") covering premises at the Elizabeth-Port Authority Marine Terminal, in the City of Elizabeth, County of Union and State of New Jersey; and

WHEREAS, the Port Authority and the Lessee desire to amend the Lease;

NOW, THEREFORE, for and in consideration of the foregoing and the agreements hereinafter contained the Port Authority and the Lessee hereby agree as follows:

1. The Port Authority and the Lessee hereby agree that the Port Authority shall perform an item of the "Class A Work", as such term is defined in Section 7(a)(1) of the Lease, described in subdivision (iii) of said Section 7(a)(i) as "dredging of three thousand three hundred (3,300) linear feet (which needs not be contiguous) of the Berthing Area to forty-five (45) feet below mean low water" (hereinafter called "the Forty-five Foot Dredging"). The Lessee shall have the right to elect to have the Port Authority perform an item of the "Class B Work" described in subdivision (v) of said section 7(a)(1) as "dredging of the three thousand three hundred (3,300) linear feet (which needs not be contiguous) of the Berthing Area to fifty (50) feet below mean low water" (hereinafter called "the Fifty Foot Dredging"). The Lessee's election to have the Port Authority perform the Fifty Foot Dredging shall be made by written notice to the Port Authority of such election. Notwithstanding any provision set forth above in this paragraph, the Port Authority shall not be obligated to perform either the Forty-five Foot Dredging or the Fifty Foot Dredging until the Lessee shall have completed the performance of the work item described in subdivision (ii) of said Section 7(a)(1) as "reinforcement of the berth to allow for dredging of three thousand three hundred (3,300) linear feet of the Berthing Area to fifty (50) feet below mean low water". It is anticipated that the Forty-five Foot Dredging will be performed pursuant to a work order or orders issued under a work order dredging and disposal contract (hereinafter called "the Forty-five Foot Dredging Contract"), with the Forty-five Foot Dredging Contract to cover dredging and disposal work in addition to the Forty-five Foot Dredging. It is further anticipated that the Fifty Foot Dredging will be performed pursuant to a work order or orders issued under a work order dredging and disposal contract (hereinafter called "the Fifty Foot Dredging Contract"), with the Fifty Foot Dredging Contract to cover dredging and disposal work in addition to the Fifty Foot Dredging. Upon completion of the Forty-five Foot Dredging or the Fifty Foot Dredging, the Port Authority shall certify to the Lessee by written certification the costs to the Port Authority of said respective dredging, and the Lessee shall pay rentals to the Port Authority on account of said respective dredging as set forth in paragraph 3 hereof. The parties agree that this Agreement is being entered into solely for the purpose of facilitating the performance of certain of "the Lessee's Construction Work", as such term is defined in section 7(a)(1) of the Lease, and except to the extent that any provision of this

CONFORMED COPY

CMe

Agreement is specifically inconsistent with the provisions of the Lease, nothing contained herein shall alter, expand or limit any of the rights or obligations of either party as set forth in the Lease.

2. The Lessee shall provide the Port Authority with sixty (60) days' prior written notice specifying the portion (if less than all) of the Forty-five Foot Dredging or the Fifty Foot Dredging, as the case may be, to be performed by the Port Authority. The aforesaid notice covering either all or the first portion of the Forty-five Foot Dredging shall set forth the amount, if any, of "the Construction Work Reimbursement Amount" or "the Financed Work Reimbursement Amount", as such terms are defined in Section 7(a)(2) and Section 7(a)(3) of the Lease, to be applied to the Forty-five Foot Dredging or the Fifty Foot Dredging, as the case may be. Upon receipt of the Lessee's aforesaid notice(s), and subject to the provisions of Section 36 of the Lease entitled "Force Majeure", the Port Authority shall proceed to deepen the Berthing Area to be dredged as specified in said notice (or such portion thereof as may be necessary), either directly or through a contractor, to a depth of forty-five (45) feet below mean low water or fifty (50) feet below mean low water, as the case may be, to such sloped depths as are deemed appropriate by the Port Authority, and which shall include normal overdraft amounts. The term "mean low water" as used in this paragraph shall mean low water as most recently at the time of execution of this Agreement determined by observations of the United States Coast and Geodetic Survey. Notwithstanding the foregoing, any dredging required under this Agreement shall be only such as shall produce (or leave in place) such depths and slopes as may be required in the opinion of the Port Authority for underwater support of structures, which opinion shall be controlling. The Port Authority's obligation to perform the Forty-five Foot Dredging and/or the Fifty Foot Dredging shall be conditioned upon all necessary permits and governmental authorizations for the respective dredging having been obtained, including any such permits and governmental authorizations regarding the dredging, transportation or disposal of dredged material.

3. (a) For all purposes of the Lease as herein amended, the following terms shall have the respective meanings provided below.

(1) "Forty-five Foot Dredging Rental Payment Start Date" shall mean the date as of which the Port Authority shall certify to the Lessee that the Port Authority has substantially completed performance of the Forty-five Foot Dredging.

(2) "Forty-five Foot Dredging Period" shall mean the period from the commencement of the Forty-five Foot Dredging through the day preceding the Forty-five Foot Dredging Rental Payment Start Date.

(3) "Forty-five Foot Dredging Rental Payment Period" shall mean the period commencing on the Forty-five Foot Dredging Rental Payment Start Date and ending on September 30, 2030.

(4) "The Port Authority's Costs of the Forty-five Foot Dredging Period" shall mean the product obtained by multiplying (i) the Berth Dredging Overhead Charge, as defined in subdivision (11) of this subparagraph, by (ii) all payments made by the Port Authority during the Forty-five Foot Dredging Period on account of the Direct Project Cost, as defined in subdivision (12) hereof, of a Dredging Project, as defined in paragraph e(4) of Section 16 of the Lease.

(5) "Fifty Foot Dredging Rental Payment Start Date" shall mean the date as of which the Port Authority shall certify to the Lessee that the Port Authority has substantially completed performance of the Fifty Foot Dredging.

(6) "Fifty Foot Dredging Period" shall mean the period from the commencement of the Fifty Foot Dredging through the day preceding the Fifty Foot Dredging Rental Payment Start Date.

(7) "Fifty Foot Dredging Rental Payment Period" shall mean the period commencing on the Fifty Foot Dredging Rental Payment Start Date and ending on September 30, 2030.

(8) "The Port Authority's Costs of the Fifty Foot Dredging Period" shall mean the product obtained by multiplying (i) the Berth Dredging Overhead Charge, as defined in subdivision (11) of this subparagraph, by (ii) all payments made by the Port Authority during the Fifty Foot Dredging Period on account of the Direct Project Cost, as defined in subdivision (12) hereof, of a Dredging Project, as defined in paragraph e(4) of Section 16 of the Lease.

(9) "Y" shall mean, as the context requires, the number (with the decimal carried to seven places) obtained by dividing the sum of (i) the average of the weekly Index of 25 Revenue Bonds as reported in the publication "The Bond Buyer" for the one hundred eighty (180) day period immediately preceding the expiration of, respectively, the Forty-five Foot Dredging Period and the Fifty Foot Dredging Period, and (ii) one hundred seventy-five (175) basis points, by the whole number twelve (12). For purposes of example and illustration only, the Index of 25 Revenue Bonds for the week ending February 27, 2003 was 5.10% as set forth in the table entitled "Bond Buyer Indexes" on page 52 of The Bond Buyer, Vol. 343, No. 31583, New York, N.Y. dated Friday, February 28, 2003. In the event that The Bond Buyer or its weekly Index of 25 Revenue Bonds shall be discontinued at any time during the term of the letting a comparable substitute for such Index shall be mutually agreed upon in writing by the Lessee and the Port Authority within thirty (30) days after discontinuance. In the event that the Port Authority and the Lessee shall fail to agree upon such a substitute within the time hereinabove specified then upon notice of either party such dispute shall be disposed of by arbitration in accordance with the then existing rules of the American Arbitration Association or any successor association. One half of the cost of said arbitration shall be borne by the Port Authority and the other half of said cost shall be borne by the Lessee.

(10) "Monthly Rental Factor" shall mean, as the context requires, the factor or factors derived in accordance herewith from time to time by the application of the following formula:

$$\frac{1}{\frac{1}{Y} - \frac{1}{Y(1+Y)^t}} = \text{Monthly Rental Factor}$$

Where t (a power) equals the number of calendar months (expressed in whole numbers) in any given Facility Rental Payment Period or Berth Rental Payment Period that shall occur during the term of the letting hereunder.

(11) "Berth Dredging Overhead Charge" shall mean the following: (i) one hundred fifteen percent (115%) if the total direct cost solely of the dredging, transportation and disposal of dredged material performed in connection with a Dredging Project, all as set forth in the contract or contracts entered into by the Port Authority for the performance of the dredging, transportation and disposal of dredged material in connection with

a Dredging Project, calculated in terms of the cost of such work per cubic yard of dredged material (hereinafter called "the Cubic Yard Dredging and Disposal Cost"), does not exceed Twenty-four Dollars and No Cents ($24.00); (ii) one hundred twelve and one-half percent (112.5%) if the Cubic Yard Dredging and Disposal Cost exceeds Twenty-four Dollars and No Cents ($24.00) but does not exceed Thirty-five Dollars and No Cents ($35.00); and one hundred ten percent (110%) if the Cubic Yard Dredging and Disposal Cost exceeds Thirty-five Dollars and No Cents ($35.00).

(12) "Direct Project Cost" shall mean the sum of the following costs of a Dredging Project as determined in accordance with normal Port Authority accounting practice: (i) all payments made by the Port Authority to third parties in connection with the performance of a Dredging Project, including without limitation all payments for environmental testing and sampling and for the dredging, transportation and disposal of dredged material; (ii) all of the Port Authority's direct labor costs in connection with a Dredging Project; (iii) all materials and services provided by the Port Authority in connection with a Dredging Project; and (iv) all contract services provided by the Port Authority in lieu of any item includable in sub-subdivision (ii) or (iii) of this subdivision.

(b) In addition to all other rentals payable by the Lessee under the Lease as herein amended, the Lessee shall pay to the Port Authority a rental (hereinafter called "the Forty-five Foot Dredging Rental") equal to the result of (i) multiplying Y for the Forty-five Foot Dredging Period and the product obtained by multiplying the amount of each payment, if any, made by the Port Authority during the Forty-five Foot Dredging Period on account of the cost of any Dredging Project by the number of days from the date of such payment to the expiration date of the Forty-five Foot Dredging Period and (ii) dividing the result of that calculation by 30. The Forty-five Foot Dredging Rental, if any, shall be payable as set forth in subparagraph (c) of this paragraph.

(c) In addition to all other rentals payable by the Lessee under the Lease as herein amended, the Lessee agrees to pay to the Port Authority a rental on account of the payments, if any, made by the Port Authority during the Forty-five Foot Dredging Period on account of the cost of a Dredging Project (hereinafter called "the Forty-five Foot Annual Berth Rental") at a monthly rate equal to the product obtained by multiplying the Monthly Rental Factor calculated in connection with the Forty-five Foot Dredging Rental Payment Period by the sum of (i) the amount of the Forty-five Foot Dredging Rental payable by the Lessee pursuant to subparagraph (b) of this paragraph and (ii) the Port Authority's Costs of the Forty-five Foot Dredging Period, which rental, if any, shall be payable during the Forty-five Foot Rental Payment Period in advance on the first day thereof and on the first day of each calendar month thereafter during such period. The rental, if any, payable pursuant to this subparagraph (c) shall not be subject to abatement or suspension or reduction for any reason whatsoever.

(d) In addition to all other rentals payable by the Lessee under the Lease as herein amended, the Lessee shall pay to the Port Authority a rental (hereinafter called "the Fifty Foot Dredging Rental") equal to the result of (i) multiplying Y for the Fifty Foot Dredging Period and the product obtained by multiplying the amount of each payment, if any, made by the Port Authority during the Fifty Foot Dredging Period on account of the cost of any Dredging Project by the number of days from the date of such payment to the expiration date of the Fifty Foot Dredging Period and (ii) dividing the result of that calculation by 30. The Fifty Foot Dredging Rental, if any, shall be payable as set forth in subparagraph (e) of this paragraph.

(e) In addition to all other rentals payable by the Lessee under the Lease as herein amended, the Lessee agrees to pay to the Port Authority a rental on account of the payments, if any, made by the Port Authority during the Fifty Foot Dredging Period on account of the cost of a Dredging Project (hereinafter called "the Fifty Foot Dredging Rental") at

a monthly rate equal to the product obtained by multiplying the Monthly Rental Factor calculated in connection with the Fifty Foot Dredging Rental Payment Period by the sum of (i) the amount of the Fifty Foot Dredging Rental payable by the Lessee pursuant to subparagraph (d) of this paragraph and (ii) the Port Authority's Costs of the Fifty Foot Dredging Period, which rental, if any, shall be payable during the Fifty Foot Dredging Rental Payment Period in advance on the first day thereof and on the first day of each calendar month thereafter during such period. The rental, if any, payable pursuant to this subparagraph (e) shall not be subject to abatement or suspension or reduction for any reason whatsoever.

4. As hereby amended, all the terms, provisions, covenants and conditions of the Lease shall continue in full force and effect.

5. The Lessee represents and warrants that no broker has been concerned in the negotiation of this Agreement and that there is no broker who is or may be entitled to be paid a commission in connection therewith. The Lessee shall indemnify and save harmless the Port Authority of and from all claims for commission or brokerage made by any and all persons, firms or corporations whatsoever for services in connection with the negotiation or execution of this Agreement.

6. Neither the Commissioners of the Port Authority nor any of them, nor any officer, agent or employee thereof, shall be charged personally by the Lessee with any liability, or held liable to the Lessee under any term or provision of this Agreement, or because of its execution or attempted execution, or because of any breach, or attempted or alleged breach thereof.

7. This Agreement, together with the Lease (to which it is supplementary) constitutes the entire agreement between the Port Authority and the Lessee on the subject matter, and may not be changed, modified, discharged or extended except by instrument in writing duly executed on behalf of both the Port Authority and the Lessee. The Lessee agrees that no representations or warranties shall be binding upon the Port Authority unless expressed in writing in the Lease or in this Agreement.

IN WITNESS WHEREOF, the Port Authority and the Lessee have executed these presents as of the date first above written.

ATTEST:

THE PORT AUTHORITY OF NEW YORK AND NEW JERSEY

By RICHARD M. LARRABEE

(Title) DIRECTOR, PORT COMMERCE DEPT.

(Seal)

ATTEST:

Secretary

MAHER TERMINALS, INC.

By

(Title) Chairman & CEO

(Corporate Seal)

APPROVED:
FORM | TERMS

MLPF-10672 Ack, NJ

STATE OF NEW YORK)
COUNTY OF NEW YORK)ss.
)

On this 18th day of August, 2003, before me, the subscriber, a notary public of New York, personally appeared RICHARD M. LARRABEE the DIRECTOR, PORT COMMERCE DEPT. of The Port Authority of New York and New Jersey, who I am satisfied is the person who has signed the within instrument: and, I having first made known to him the contents thereof, he did acknowledge that he signed, sealed with the corporate seal and delivered the same as such officer aforesaid and that the within instrument is the voluntary act and deed of such corporation, made by virtue of the authority of the Board of Commissioners.

Marie M. Edwards
(notarial seal and stamp)

Marie M. Edwards
Notary Public, State of New York
No. 01ED4959693
Qualified in Kings County
Commission Expires Jan. 6, 2006

STATE OF New Jersey)
COUNTY OF Union)ss.
)

On this 24 day of July, 2003, before me, the subscriber, a notary public of , personally appeared M. Beiaj Mahon the Chairman & CEO

who I am satisfied is the person who has signed the within instrument; and I having first made known to him the contents thereof, he did acknowledge that he signed, sealed with the corporate seal and delivered the same as such officer aforesaid and that the within instrument is the voluntary act and deed of such corporation, made by virtue of the authority of the Board of Directors.

Virginia S. Kochan
(notarial seal and stamp)

VIRGINIA S. KOCHAN
Notary Public, State of New Jersey
Registered in Union County
My Commission Expires Aug. 12, 2006

AGREEMENT

between

THE PORT AUTHORITY OF NEW YORK AND NEW JERSEY

and

MAHER TERMINALS, INC.

Dated as of September 1, 2001

CONFOR

Red. 1

MLPF 4473.1

THIS AGREEMENT OF LEASE, made as of the 1st day of September, 2001, by and between THE PORT AUTHORITY of NEW YORK and NEW JERSEY (hereinafter called "the Port Authority") a body corporate and politic created by Compact between the States of New York and New Jersey with the consent of the Congress of the United States of America and having an office and place of business at One World Trade Center, New York, New York 10048, and MAHER TERMINALS, INC., a New Jersey corporation (hereinafter called "the Lessee") with an office and place of business at One Journal Square Plaza, Jersey City, New Jersey 07306, whose representative is M. Brian Maher,

WITNESSETH, That:

The Port Authority and the Lessee, for an in consideration of the covenants and mutual agreements hereinafter contained, do hereby agree as follows:

ARTICLE I. The Port Authority hereby lets to the Lessee and the Lessee hereby hires and takes from the Port Authority, at the Elizabeth-Port Authority Marine Terminal (sometimes hereinafter called "the Facility"), in the City of Elizabeth, County of Union and State of New Jersey, the following described premises:

> the open area and the enclosed spaces shown in diagonal crosshatching on the sketch attached hereto, hereby made a part hereof and marked "Exhibit A",

together with the buildings, structures, fixtures, improvements, and other property, if any, of the Port Authority located or to be located therein or thereon, the said open area and enclosed spaces, buildings, structures, fixtures, improvements and other property of the Port Authority being hereinafter called "the premises". The Port Authority and the Lessee hereby acknowledge that the foregoing premises constitute non-residential property.

ARTICLE II. The term of the letting shall commence at 12:01 o'clock A.M. on September 1, 2001 and, unless sooner terminated, shall expire at 11:59 o'clock P.M. on August 31, 2015.

ARTICLE III. The Lessee shall pay a basic rental as set forth in Special Endorsements No. 2 and No. 3 hereto.

ARTICLE IV. The Lessee shall use and occupy the premises for the following purposes only, and for no other purpose whatsoever:

As set forth in Special Endorsement No. 1 hereto.

ARTICLE V. The Port Authority and the Lessee agree that the letting shall be subject to and in accordance with, and the Lessee and the Port Authority each for itself agrees that it will perform all the obligations imposed upon it by, the Terms and Conditions (Sections 1 through 30) hereof and the following endorsements and attachments, all annexed hereto and made a part hereof, with the same effect as if the same were set forth herein in full:

TITLE	NUMBER	DATE
Services	Standard Endorsement No. L5.1	10/6/75
Elizabeth-Port Authority Marine Terminal	Standard Endorsement No. L19.11	10/6/73
Insurance	Standard Endorsement No. L21.1	3/25/82
Abatement	Standard Endorsement No. L27.4	10/6/68
Special Endorsements		
Space Plan - Exhibit A		
Schedule naming Rules, Regulations, Rates and Charges applying at Port Authority Marine Terminals - Exhibit R		

ARTICLE VI. The within, together with the said Terms and Conditions, endorsements and attachments, constitutes the entire agreement of the Port Authority and the Lessee on the subject matter, and may not be changed, modified, discharged or extended except by written instrument duly executed by the Port Authority and the Lessee. The Lessee agrees that no representations or warranties shall be binding upon the Port Authority unless expressed in writing in this Agreement.

IN WITNESS WHEREOF, the Port Authority and the Lessee hereto have executed these presents as of the date first above written.

THE PORT AUTHORITY OF NEW YORK AND NEW JERSEY

ATTEST:

Daniel D. Bergstein
Secretary
The Port Authority of NY & NJ

By _____
RICHARD M. LARRABEE
Title DIRECTOR, PORT COMMERCE DEPT.
(Seal)

MAHER TERMINALS, INC.

ATTEST:

Secretary

By _____

Title: Chairman and Chief Executive Officer
(Corporate Seal)

APPROVED:
FORM | TERMS

TERMS AND CONDITIONS

SECTION 1. *Ingress and Egress*

The Lessee shall have the right of ingress and egress between the premises and the city streets outside the Facility. Such right shall be exercised by means of such pedestrian or vehicular ways to be used in common with others having rights of passage within the Facility, as may from time to time be designated by the Port Authority for the use of the public. The use of any such way shall be subject to the rules and regulations of the Port Authority which are now in effect or which may hereafter be promulgated for the safe and efficient operation of the Facility. The Port Authority may, at any time, temporarily or permanently close, or consent to or request the closing of, any such way or any other area at, in or near the Facility presently or hereafter used as such, so long as a means of ingress and egress as provided above remains available to the Lessee. The Lessee hereby releases and discharges the Port Authority, and all municipalities and other governmental authorities, and their respective successors and assigns, of and from any and all claims, demands, or causes of action which the Lessee may now or at any time hereafter have against any of the foregoing, arising or alleged to arise out of the closing of any way or other area, whether within or outside the Facility. The Lessee shall not do or permit anything to be done which will interfere with the free access and passage of others to space adjacent to the premises or in any streets, ways and walks near the premises.

SECTION 2. *Governmental and Other Requirements*

(a) The Lessee shall procure from all governmental authorities having jurisdiction of the operations of the Lessee hereunder, all licenses, certificates, permits or other authorization which may be necessary for the conduct of such operations.

(b) The Lessee shall promptly observe, comply with and execute the provisions of any and all present and future governmental laws, rules, regulations, requirements, orders and directions which may pertain or apply to its operations or the use and occupancy of the premises hereunder, and in addition shall make all improvements, repairs and alterations which may be so required.

(c) The obligation of the Lessee to comply with governmental requirements is provided herein for the purpose of assuring proper safeguards for the protection of persons and property in or near the Facility and proper operation by the Lessee. Such provision herein is not to be construed as a submission by the Port Authority to the application to itself of such requirements or any of them.

SECTION 3. *Rules and Regulations*

(a) The Lessee covenants and agrees to observe and obey (and to compel its officers, employees and others on the premises with its consent to observe and obey) the Rules and Regulations of the Port Authority as now supplemented and now in effect, and such further reasonable rules and regulations (including amendments and supplements thereto) for the government of the conduct and operations of the Lessee as may from time to time during the letting be promulgated by the Port Authority for reasons of safety, health, or preservation of property, or for the maintenance of the good and orderly appearance of the premises, or for the safe or efficient operation of the Facility. The Port Authority agrees that, except in cases of emergency, it will give notice to the Lessee of every such further rule or regulation at least five (5) days before the Lessee shall be required to comply therewith.

(b) If a copy of the Rules and Regulations is not attached, then the Port Authority will notify the Lessee thereof by either delivery of a copy, or by publication in a newspaper published in the Port of New York District or by making a copy available at the office of the Secretary of the Port Authority.

(c) No statement or provision in the said Rules and Regulations shall be deemed a representation or promise by the Port Authority that the services or privileges described shall be or remain available, or that the charges, prices, rates or fees stated therein shall be or remain in effect throughout the letting, all of the same being subject to change by the Port Authority from time to time whenever it deems a change advisable.

SECTION 4. *Method of Operation*

(a) In the performance of its obligations hereunder and in the use of the premises the Lessee shall conduct its operations in an orderly and proper manner, so as not to annoy, disturb or be offensive to others near the premises or at the Facility and within twenty four hours remove the cause of any objection made by the Port Authority relative to the demeanor, conduct or appearance of any of the employees of the Lessee or others on the premises with the consent of the Lessee.

(b) The Lessee shall not allow any garbage, debris or other waste materials (whether solid or liquid) to collect or accumulate on the premises and the Lessee shall remove from the premises and from the Facility all garbage, debris and other waste materials (whether solid or liquid) arising out of its operations hereunder. Any such material which may be temporarily stored shall be kept in suitable waste receptacles, the same to be made of metal and equipped with tight-fitting covers, and in any case to be designed and constructed to contain safely the waste material placed by the Lessee therein. The receptacles shall be provided and maintained by the Lessee and shall be kept covered except when being filled or emptied. The Lessee shall use extreme care when effecting removal of all such material, shall effect such removal at such times and by such means as first approved by the Port Authority, and shall in no event make use of any facilities or equipment of the Port Authority except with the prior consent thereof.

(c) The Lessee shall not do or permit to be done anything which may interfere with the effectiveness or accessibility of the utility, mechanical, electrical and other systems installed or located anywhere at the Facility.

(d) The Lessee shall not commit any nuisance or permit its employees or others on the premises with its consent to commit or create or continue or tend to create any nuisance on the premises or in or near the Facility.

(e) The Lessee shall take all reasonable measures to keep the sound level of its operations as low as possible and to eliminate vibrations tending to damage the premises or the Facility or any part thereof.

(f) The Lessee shall not cause or permit to be caused or produced upon the premises, to permeate the same or to emanate therefrom, any unusual, noxious or objectionable smokes, gases vapors or odors.

(g) The Lessee shall not do or permit to be done any act or thing at the Facility which shall or might subject the Port Authority to any liability or responsibility for injury to any person or persons or damage to any property.

(h) The Lessee shall not overload any floor, roof, land surface, bulkhead, pavement, landing, pier or wharf at the Facility, and shall repair, replace or rebuild any such, including but not limited to supporting members, damaged by overloading. For the purpose of this paragraph (h), any placing on the premises of a load per square foot in excess of the number of pounds avoirdupois, if any, stated in any Special Endorsement hereto shall constitute overloading, but an overload may be created by a lesser weight. Nothing in this paragraph or elsewhere in this Agreement shall be or be construed to be a representation by the Port Authority of the weight capacity of any part of the Facility.

(i) The Lessee shall not do or permit to be done any act or thing upon the premises or at the Facility which (1) will invalidate or conflict with any fire insurance policies covering the premises or any part thereof, or the Facility, or any part thereof or (2) which, in the opinion of the Port Authority, may constitute an extra-hazardous condition, so as to increase the risks normally attendant upon the operations permitted by this Agreement, or (3) which will increase the rate of any fire insurance, extended coverage or rental insurance on the Facility or any part thereof or on the contents of any building thereon. The Lessee shall promptly observe, comply with and execute the provisions of any and all present and future rules and regulations, requirements, orders and directions of the National Fire Protection Association and, if the premises are located in New York, of the Insurance Services Office of New York, or, if the premises are located in New Jersey, of the Insurance Services Office of New Jersey, or of any other board or organization exercising or which may exercise similar functions, which may pertain or apply to the operations of the Lessee on the premises, and the Lessee shall, subject to and in accordance with the provisions of this Agreement relating

to construction by the Lessee, make any and all structural and non-structural improvements, alterations or repairs of the premises that may be required at any time hereafter by any such present or future rule, regulation, requirement, order or direction. If by any reason of any failure on the part of the Lessee to comply with the provisions of this paragraph any fire insurance, extended coverage or rental insurance rate on the premises or any part thereof, or on the Facility or any part thereof, shall at any time be higher than it otherwise would be, then the Lessee shall pay to the Port Authority that part of all premiums paid by the Port Authority which shall have been charged because of such violation or failure by the Lessee.

(j) From time to time and as often as required by the Port Authority, the Lessee shall conduct pressure, water-flow, and other appropriate tests of the fire extinguishing system and fire-fighting equipment on the premises whether furnished by the Port Authority or by the Lessee. The Lessee shall keep all fire-fighting and fire extinguishing equipment well supplied with a fresh stock of chemicals and with sand, water or other materials as the case may be for the use of which such equipment is designed, and shall train its employees in the use of all such equipment, including in such training periodic drills.

SECTION 5. *Signs*

(a) Except with the prior consent of the Port Authority, the Lessee shall not erect, maintain or display any advertising, signs, posters or similar devices at or on the premises or elsewhere at the Facility.

(b) Upon demand by the Port Authority, the Lessee shall remove, obliterate, or paint out any and all advertising, signs, posters and similar devices placed by the Lessee on the premises or elsewhere on the Facility and in connection therewith at the expiration or earlier termination of the letting, shall restore the premises and the Facility to the same condition as at the commencement of the letting. In the event of a failure on the part of the Lessee so to remove, obliterate or paint out each and every sign or piece of advertising and so to restore the premises and the Facility, the Port Authority may perform the necessary work and the Lessee shall pay the costs thereof to the Port Authority on demand.

SECTION 6. *Indemnity*

The Lessee shall indemnify and hold harmless the Port Authority, its Commissioners, officers, employees and representatives, from all claims and demands of third persons including but not limited to claims and demands for death, claims and demands for personal injuries, and claims and demands for property damages, arising out of the use or occupancy of the premises by the Lessee or by others with its consent or out of any other acts or omissions of the Lessee, its officers and employees on the premises or elsewhere at the Facility, or out of the acts or omissions of others on the premises with the consent of the Lessee, including claims and demands of the party from which the Port Authority derives its rights in the Facility for indemnification arising by operation of law or through agreement of the Port Authority with such party.

SECTION 7. *Maintenance and Repair*

(a) The Lessee shall at all times keep the premises clean, and in an orderly condition and appearance, together with all the fixtures, equipment and personal property of the Lessee located in or on the premises.

(b) The Lessee shall repair, replace, rebuild and paint all or any part of the premises which may be damaged or destroyed by the acts or omissions of the Lessee or by those of its officers, employees or of other persons on or at the premises with the consent of the Lessee.

(c) With respect to all parts of the premises, including, but without limitation thereto, such of the following as are or may be during the term of the letting located in or on the premises; fences, the exterior and interior of the building walls the exterior and interior and operating mechanisms of and attachments to windows and skylights, screens, roofs, foundations, steel work, columns, the exterior and interior and operating mechanisms of and attachments to doors, partitions, floors, ceilings, inside and outside paved and unpaved areas, glass of every kind, and the utility, mechanical,

electrical and other systems, the Lessee shall take the same good care of the premises that would be taken by a reasonably prudent owner who desired to keep and maintain the same so that at the expiration or termination of the letting and at all times during the letting, the same (or a reconstruction of all or any part thereof) will be in as good condition as at the commencement thereof (or, in the case of improvements made during the letting hereunder, in as good condition as at the time of the installation or construction thereof), except for reasonable wear which does not adversely affect the watertight condition or structural integrity of the building or other structures on the premises or adversely affect the efficient or the proper utilization of any part of the premises. To that end, the Lessee shall make frequent periodic inspections and, from time to time as the necessity therefor arises and regardless of the cause of the condition requiring the same, the Lessee shall perform all necessary preventive maintenance including but not limited to painting (the exterior of the building, areas of joint or common use and areas visible to the general public to be painted in colors which have been approved by the Port Authority), and, except under circumstances as set forth in paragraph (a) of Section 8 of these Terms and Conditions, the Lessee shall make all necessary repairs and replacements and do all necessary rebuilding with respect to all parts of the premises, all of which shall be in quality equal to the original in materials and workmanship and regardless of whether such repairs and replacements are structural or non-structural, ordinary or extraordinary, foreseen or unforeseen. The Lessee shall commence to perform each of its obligations hereunder within twenty days after notice from the Port Authority and shall thereafter continue the same to completion with reasonable diligence.

(d) The obligation of the Lessee as set forth in paragraphs (b) and (c), of this Section, in the event of damage or destruction covered by any contract of insurance under which the Port Authority is the insured, is hereby released to the extent that the loss is recouped by actual payment to the Port Authority of the proceeds of such insurance; *provided, however*, that, if this release shall invalidate any such policy of insurance or reduce, limit or void the rights of the Port Authority thereunder, then the release shall be void and of no effect.

SECTION 8. *Casualty*

(a) *In the event that, as a result of a casualty insured against in favor of the Port Authority under the* standard form of fire insurance policy and extended coverage endorsement carried by it on any structure, building or portion of a building which is or is a part of the premises, the same is damaged (without the fault of the Lessee, its officers, employees, or others on or at the premises with its consent) so as to render it untenantable in whole or substantial part, then

(1) if, in the opinion of the Port Authority, the necessary repairs or rebuilding can be completed within ninety (90) days after the occurrence of the damage, the Port Authority shall repair or rebuild with due diligence, and the rental hereunder shall be abated as provided in this Agreement, for the period from the occurrence of the damage to the completion of the repairs or rebuilding, whether or not the work of repair or rebuilding is actually completed within the said ninety (90) days; or

(2) if, in the opinion of the Port Authority, such repairs or rebuilding cannot be completed within ninety (90) days after the occurrence of the damage or if one or more of the structures or buildings which are a part of the premises or the entire premises require rebuilding, then the Port Authority shall have options: (i) to proceed with due diligence to repair or to rebuild as necessary or (ii) to terminate the letting as to the damaged structure or structures, building or buildings or portion thereof only; or (iii) to cancel this Agreement and terminate the letting as to the entire premises; and the rental payable under this Agreement shall be abated, as provided in this Agreement, either, as the case may require, for the period from the occurrence of the damage to the completion of repairs and rebuilding, or for the period from the occurrence of the damage to the effective date of termination, for the area or areas involved.

(b) "Substantial part" *shall mean for the purpose of this Section at least twenty-five percent (25%) of the* usable floor space in the structure or building or part thereof comprising the premises, or, if there is more than one structure or building on the premises, at least twenty-five percent (25%) of the aggregate usable floor space comprising *the premises in all of the structures and buildings covered by insurance.*

(c) The parties hereby stipulate that if the premises are in New Jersey neither the provisions of Titles 46:8-6 and 46:8-7 of the Revised Statutes of New Jersey nor those of any other similar statute shall extend or apply to this Agreement and if the premises are in New York, neither the provisions of Section 227 of the Real Property Law of New York nor those of any other similar statute shall extend or apply to this Agreement.

(d) In the event of damage to or a partial or total destruction of the premises, the Lessee shall within five days of the occurrence commence to remove all of its damaged property and all debris thereof from the premises or from the portion thereof destroyed and thereafter shall diligently continue such removal and if the Lessee does not perform its obligation hereunder, the Port Authority may remove such debris and dispose of the same and may remove such property to a public warehouse for deposit or may retain the same in its own possession and sell the same at public auction, the proceeds of which shall be applied first to the expenses of removal, storage and sale, second to any sums owed by the Lessee to the Port Authority, with any balance remaining to be paid to the Lessee; if the expenses of such removal, storage and sale shall exceed the proceeds of sale, the Lessee shall pay such excess to the Port Authority upon demand.

SECTION 9. *Assignment and Sublease*

a) The Lessee covenants and agrees that it will not sell, convey, transfer, assign, mortgage or pledge this Agreement or any part thereof, or any rights created thereby or the letting thereunder or any part thereof.

(b) The Lessee shall not sublet the premises or any part thereof.

(c) If the Lessee assigns, sells, conveys, transfers, mortgages, pledges or sublets in violation of subdivisions (a) or (b) of this Section or if the premises are occupied by anybody other than the Lessee, the Port Authority may collect rent from any assignee, sublessee or anyone who claims a right to this Agreement or letting or who occupies the premises and shall apply the net amount collected to the rental herein reserved; and no such collection shall be deemed a waiver by the Port Authority of the covenants contained in subdivisions (a) and (b) of this Section nor an acceptance by the Port Authority of any such assignee, sublessee, claimant or occupant as tenant, nor a release of the Lessee by the Port Authority from the further performance by the Lessee of the covenants contained herein.

(d) The Lessee further covenants and agrees that it will not use or permit any person whatsoever to use the premises or any portion thereof for any purpose other than as provided in Article IV of this Agreement.

SECTION 10. *Condemnation*

(a) In any action or other proceeding by any governmental agency or agencies for the taking for a public use of any interest in all or part of the premises, or in case of any deed, lease or other conveyance in lieu thereof (all of which are in this Section referred to as "taking or conveyance"), the Lessee shall not be entitled to assert any claim to any compensation, award or part thereof made or to be made therein or therefor or any claim to any consideration or rental or any part thereof paid therefor, or to institute any action or proceeding or to assert any claim against such agency or agencies or against the Port Authority for any such taking or conveyance, it being understood and agreed between the parties hereto that the Port Authority shall be entitled to all compensation or awards made or to be made or paid, and all such consideration or rental, free of any claim or right of the Lessee.

(b) In the event that all or any portion of the premises is required by the Port Authority to comply with any present or future governmental law, rule, regulation, requirement, order or direction, the Port Authority may by notice given to the Lessee terminate the letting with respect to all or such portion of the premises so required. Such termination shall be effective on the date specified in the notice. The Lessee hereby agrees to deliver possession of all or such portion of the premises so required upon the effective date of such termination in the same condition as that required for the delivery of the premises upon the date originally fixed by this Agreement for the expiration of the term of the letting. No taking by or conveyance to any governmental authority as described in paragraph (a) of this Section, nor any delivery

by the Lessee nor taking by the Port Authority pursuant to this paragraph, shall be or be construed to be an eviction of the Lessee or a breach of this Agreement or be made the basis of any claim by the Lessee against the Port Authority for damages, consequential or otherwise.

(c) In the event that the taking or conveyance covers the entire premises, or in the event that the letting is terminated with respect to the entire premises pursuant to paragraph (b) of this Section, then this Agreement shall, as of the date possession is taken by such agency or agencies from the Port Authority, or as of the effective date of such termination, cease and determine in the same manner and with the same effect as if the said date were the original date of expiration hereof.

(d) In the event that the taking or conveyance covers a part only of the premises, or in the event that the letting is terminated pursuant to paragraph (b) of this Section with respect to a part only of the premises, then the letting as to such part shall, as of the date possession thereof is taken by such agency or agencies, or as of the effective date of such termination, cease and determine in the same manner and with the same effect as if the term of the letting had on that date expired, and the basic rental shall be abated as provided hereinafter.

(e) In the event that the taking or conveyance or the delivery by the Lessee or taking by the Port Authority pursuant to paragraph (b) of this Section covers fifty percent (50%) or more of the total usable area of the premises including both open and enclosed space, then the Lessee and the Port Authority shall each have an option exercisable by notice given within ten (10) days after such taking or conveyance to terminate the letting hereunder, as of the date of such taking, and such termination shall be effective as if the date of such taking were the original date of expiration hereof.

SECTION 11. *Construction by the Lessee*

Except with the prior consent of the Port Authority, the Lessee shall not erect any structures, make any improvements or do any other construction work on the premises or alter, modify, or make additions, improvements or repairs to or replacements of, any structure now existing or built at any time during the letting, or install any fixtures, and in the event any construction, improvement, alteration, modification, addition, repair or replacement is made with or without such consent and unless the consent of the Port Authority shall expressly provide otherwise, the same shall immediately become the property of the Port Authority, and the Lessee shall have no right to remove the same either during the letting or at the expiration thereof unless the Port Authority, at any time prior to the expiration of the term of the letting, or any extension or renewal thereof, or within sixty (60) days after expiration or earlier termination of the term of the letting, shall give notice to the Lessee to remove the same, or to cause the same to be changed to the satisfaction of the Port Authority, in which case the Lessee agrees to remove the same, or change it in compliance with such notice. In case of any failure on the part of the Lessee to comply with such notice, the Port Authority may effect the removal or change, and the Lessee hereby agrees to pay the cost thereof to the Port Authority upon demand.

SECTION 12. *Additional Rent and Charges*

(a) If the Port Authority has paid any sum or sums or has incurred any obligations or expense which the Lessee has agreed to pay or reimburse the Port Authority for, or if the Port Authority is required or elects to pay any sum or sums or incurs any obligations or expense by reason of the failure, neglect or refusal of the Lessee to perform or fulfill any one or more of the conditions, covenants or agreements contained in this Agreement or as a result of an act or omission of the Lessee contrary to the said conditions, covenants and agreements, the Lessee shall pay to the Port Authority the sum or sums so paid or the expense so incurred, including all interest, costs, damages and penalties and the same may be added to any installment of rent thereafter due hereunder, and each and every part of the same shall be and become additional rent, recoverable by the Port Authority in the same manner and with like remedies as if it were originally a part of the basic rental as set forth in Article III hereof.

(b) For all purposes under this Section and in any suit, action or proceeding of any kind between the parties hereto, any receipt showing any payment of sum or sums by the Port Authority for any work done or material furnished shall be *prima facie* evidence against the Lessee that the amount of such payment was necessary and reasonable. Should

the Port Authority elect to use its operating and maintenance staff in performing any work and to charge the Lessee with the cost of same, any time report of any employee of the Port Authority showing hours of labor or work allocated to such work, or any stock requisition of the Port Authority showing the issuance of materials for use in the performance thereof shall likewise be *prima facie* evidence against the Lessee that the amount of such charge was necessary and reasonable.

(c) The term "cost" in this Agreement shall mean and include: (1) Payroll costs, including contributions to the Retirement System, or the cost of participation in other pension plans or systems, insurance costs, sick leave pay, holiday, vacation and authorized absence pay; (2) Cost of materials and supplies used; (3) Payments to contractors; (4) Any other direct costs; and (5) 30% of the sum of the foregoing.

SECTION 13. *Rights of Entry Reserved*

(a) The Port Authority, by its officers, employees, agents, representatives and contractors shall have the right at all reasonable times to enter upon the premises for the purpose of inspecting the same, for observing the performance by the Lessee of its obligations under this Agreement, and for the doing of any act or thing which the Port Authority may be obligated or have the right to do under this Agreement or otherwise.

(b) Without limiting the generality of the foregoing, the Port Authority, by its officers, employees, agents, representatives, and contractors, and furnishers of utilities and other services, shall have the right, for its own benefit, for the benefit of the Lessee, or for the benefit of others than the Lessee at the Facility, to maintain existing and future utility, mechanical, electrical and other systems and to enter upon the premises at all reasonable times to make such repairs, replacements or alterations as may, in the opinion of the Port Authority, be deemed necessary or advisable and, from time to time, to construct or install over, in or under the premises new systems or parts thereof, and to use the premises for access to other parts of the Facility otherwise not conveniently accessible; *provided, however*, that in the exercise of such rights of access, repair, alteration or new construction the Port Authority shall not unreasonably interfere with the use and occupancy of the premises by the Lessee.

(c) In the event that any property of the Lessee shall obstruct the access of the Port Authority, its employees, agents or contractors to any of the existing or future utility, mechanical, electrical and other systems and thus shall interfere with the inspection, maintenance or repair of any such system, the Lessee shall move such property, as directed by the Port Authority, in order that the access may be had to the system or part thereof for its inspection, maintenance or repair, and, if the Lessee shall fail to so move such property after direction from the Port Authority to do so, the Port Authority may move it and the Lessee hereby agrees to pay the cost of such moving upon demand.

(d) Nothing in this Section shall or shall be construed to impose upon the Port Authority any obligations so to construct or maintain or to make repairs, replacements, alterations or additions, or shall create any liability for any failure so to do. The Lessee is and shall be in exclusive control and possession of the premises and the Port Authority shall not in any event be liable for any injury or damage to any property or to any person happening on or about the premises nor for any injury or damage to the premises nor to any property of the Lessee or of any other person located in or thereon (other than those occasioned by the acts of the Port Authority).

(e) At any time and from time to time during ordinary business hours within the three (3) months next preceding the expiration of the letting, the Port Authority, by its agents and employees, whether or not accompanied by prospective lessees, occupiers or users of the premises, shall have the right to enter thereon for the purpose of exhibiting and viewing all parts of the same and during such three- month period the Port Authority may place and maintain on the premises, the usual "To Let" signs, which signs the Lessee shall permit to remain without molestation.

(f) If, during the last month of the letting, the Lessee shall have removed all or substantially all its property from the premises, the Port Authority may immediately enter and alter, renovate and redecorate the premises.

(g) The exercise of any or all of the foregoing rights by the Port Authority or others shall not be or be construed to be an eviction of the Lessee nor be made the grounds for any abatement of rental nor any claim or demand for damages, consequential or otherwise.

SECTION 14. *Limitation of Rights and Privileges Granted*

(a) The premises are let to the Lessee and the Lessee takes the same subject to all the following: (i) easements. restrictions, reservations, covenants and agreements if any, to which the premises may be subject, rights of the public in and to any public street (ii) rights, if any, of any enterprise, public or private which is engaged in furnishing heating, lighting, power, telegraph, telephone, steam, or transportation services and of the municipality and State in which the premises are located, (iii) permits, licenses, regulations and restrictions, if any, of the United States, the municipality or State in which the premises are located, or other governmental authority

(b) No greater rights or privileges with respect to the use of the premises or of the facility or any part thereof are granted or intended to be granted to the Lessee by this Agreement, or by any provision thereof, than the rights and privileges expressly and specifically granted.

(c) Nothing in this Agreement contained shall grant to the Lessee any rights whatsoever in the air space above the roof of the building or buildings or portion of a building or buildings, if any are included in the premises, (except to the extent required in either case for the performance of any of the obligations of the Lessee hereunder), or more than twenty (20) feet above the present ground level of any open area included in the premises.

SECTION 15. *Prohibited Acts*

(a) Unless otherwise expressly permitted so to do, the Lessee shall not install, maintain or operate, or permit the installation, maintenance or operation on the premises of any vending machine or device designed to dispense or sell food, beverages, tobacco, tobacco products or merchandise of any kind, whether or not included in the above categories, or of any restaurant, cafeteria, kitchen, stand or other establishment of any type for the preparation, dispensing or sale of food, beverages tobacco, tobacco products or merchandise of any kind, whether or not included in the above categories, or of any equipment or device for the furnishing to the public of service of any kind, including therein, without limitation thereto, telephone pay-stations.

(b) The Port Authority, by itself or by contractors, lessees or permittees, shall have the exclusive right to install, maintain and receive and retain the revenues from all coin-operated or other machines or devices for the sale of merchandise of all types, or for the rendering of services, which may be operated on the premises; *provided, however,* that no such machine or device shall be installed except upon the request of the Lessee. This provision shall not be construed to confer upon the Lessee any right to have such machine installed except at the sole discretion of the Port Authority.

SECTION 16. *Termination*

(a) If any one or more of the following events shall occur, that is to say:

(1) The Lessee shall become insolvent, or shall take the benefit of any present or future insolvency statute, or shall make a general assignment for the benefit of creditors, or file a voluntary petition in bankruptcy or a petition or answer seeking an arrangement or its reorganization or the readjustment of its indebtedness under the federal bankruptcy laws or under any other law or statute of the United States or of any State thereof, or consent to the appointment of a receiver, trustee or liquidator of all or substantially all of its property; or

(2) By order or decree of a court the Lessee shall be adjudged bankrupt or an order shall be made approving a petition filed by any of its creditors or, if the Lessee is a corporation, by any of its stockholders, seeking its reorganization or the readjustment of its indebtedness under the federal bankruptcy laws or under any law or statute of the United States or of any State thereof; or

(3) A petition under any part of the federal bankruptcy laws or an action under any present or future insolvency law or statute shall be filed against the Lessee and shall not be dismissed within thirty (30) days after the filing thereof; or

(4) The letting or the interest of the Lessee under this Agreement shall be transferred to, pass to or devolve upon, by operation of law or otherwise, any other person, firm or corporation; or

(5) The Lessee, if a corporation, shall, without the prior approval of the Port Authority, become a possessor or merged corporation in a merger, a constituent corporation in a consolidation, or a corporation in dissolution; or

(6) If the Lessee is a partnership, and the said partnership shall be dissolved as the result of any act or omission of its partners or any of them, or by operation of law or the order or decree of any court having jurisdiction, or for any other reason whatsoever; or

(7) By or pursuant to, or under authority of any legislative act, resolution or rule, or any order or decree of any court or governmental board, agency or officer, a receiver, trustee, or liquidator shall take possession or control of all or substantially all of the property of the Lessee, and such possession or control shall continue in effect for a period of fifteen (15) days; or

(8) The Lessee shall voluntarily abandon, desert or vacate the premises or discontinue its operations at the premises or at the Facility or, after exhausting or abandoning any right of further appeal, the Lessee shall be prevented for a period of thirty (30) days by action of any governmental agency from conducting its operations on the premises, regardless of the fault of the Lessee; or

(9) Any lien shall be filed against the premises because of any act or omission of the Lessee and shall not be discharged within twenty (20) days; or

(10) The Lessee shall fail duly and punctually to pay the rental or to make any other payment required hereunder when due to the Port Authority; or

(11) The Lessee shall fail to keep, perform and observe each and every other promise, covenant and agreement set forth in this agreement, on its part to be kept, performed or observed, within ten (10) days after its receipt of notice of default thereunder from the Port Authority (except where fulfillment of its obligation requires activity over a period of time, and the Lessee shall have commenced to perform whatever may be required for fulfillment within ten (10) days after receipt of notice and continues such performance without interruption except for causes beyond its control);

then upon the occurrence of any such event or at any time thereafter during the continuance thereof, the Port Authority may by five (5) days' notice terminate the letting and the Lessee's rights hereunder, such termination to be effective upon the date specified in such notice. Such right of termination and the exercise thereof shall be and operate as a conditional limitation.

(b) If any of the events enumerated in paragraph (a) of this Section shall occur prior to the commencement of the letting, the Lessee shall not be entitled to enter into possession of the premises, and the Port Authority, upon the occurrence of any such event, or at any time thereafter, during the continuance thereof, by twenty-four (24) hours' notice, may cancel the interest of the Lessee under this agreement, such cancellation to be effective upon the date specified in such notice.

(c) No acceptance by the Port Authority of rentals, fees, charges or other payments in whole or in part for any period or periods after a default of any of the terms, covenants and conditions hereof to be performed, kept or observed by the Lessee shall be deemed a waiver of any right on the part of the Port Authority to terminate the letting. No waiver by the Port Authority of any default on the part of the Lessee in performance of any of the terms, covenants or conditions hereof to be performed, kept or observed by the Lessee shall be or be construed to be a waiver by the Port Authority of any other or subsequent default in performance of any of the said terms, covenants and conditions.

(d) The rights of termination described above shall be in addition to any other rights of termination provided in this Agreement and in addition to any rights and remedies that the Port Authority would have at law or in equity consequent upon any breach of this Agreement by the Lessee, and the exercise by the Port Authority of any right of termination shall be without prejudice to any other such rights and remedies.

SECTION 17. *Right of Re-entry*

The Port Authority shall, as an additional remedy upon the giving of a notice of termination as provided in Section 16 of these Terms and Conditions, have the right to re-enter the premises and every part thereof upon the effective date of termination without further notice of any kind, and may regain and resume possession either with or without the institution of summary or any other legal proceedings or otherwise. Such re-entry, or regaining or resumption of possession, however, shall not in any manner affect, alter or diminish any of the obligations of the Lessee under this Agreement, and shall in no event constitute an acceptance of surrender.

SECTION 18. *Waiver of Redemption*

The Lessee hereby waives any and all rights to recover or regain possession of the premises and all rights of redemption, granted by or under any present or future law in the event it is evicted or dispossessed for any cause, or in the event the Port Authority obtains possession of the premises in any lawful manner.

SECTION 19. *Survival of the Obligations of the Lessee*

(a) In the event that the letting shall have been terminated in accordance with a notice of termination as provided in Section 16 of these Terms and Conditions, or the interest of the Lessee shall have been cancelled pursuant thereto, or in the event that the Port Authority has re-entered, regained or resumed possession of the premises in accordance with the provisions of Section 17 of these Terms and Conditions, all of the obligations of the Lessee under this Agreement shall survive such termination or cancellation, re-entry, regaining or resumption of possession and shall remain in full force and effect for the full term of the letting, as originally fixed in Article II hereof, and the amount or mounts of damages or deficiency shall become due and payable to the Port Authority to the same extent, at the same time or times and in the same manner as if no termination, cancellation, re-entry, regaining or resumption of possession had taken place. The Port Authority may maintain separate actions each month to recover the damage or deficiency then due or at its option and at any time may sue to recover the full deficiency less the proper discount, for the entire unexpired term.

(b) The amount of damages for the period of time subsequent to termination or cancellation (or re-entry, regaining or resumption of possession) an account of the Lessee's rental obligations, shall be the sum of the following:

(1) The amount of the total of all annual rentals, less the installments thereof prior to the effective date of termination except that the credit to be allowed for the installment paid on the first day of the month in which the termination is effective shall be prorated for the part of the month the letting remains in effect on the basis of a 30-day month; and

(2) An amount equal to all expenses incurred by the Port Authority in connection with regaining possession and restoring and reletting the demised premises, for legal expenses, boiler insurance premiums, if any, putting the premises in order including without limitation, cleaning, decorating and restoring (on failure of the Lessee to restore), maintenance and brokerage fees.

SECTION 20. *Reletting by the Port Authority*

The Port Authority, upon termination or cancellation pursuant to Section 16 of these Terms and Conditions, or upon any re-entry, regaining or resumption of possession pursuant to Section 17 of these Terms and Conditions, may occupy the premises or may relet the premises and shall have the right to permit any person, firm or corporation to enter

upon the premises and use the same. Such reletting may be of part only of the premises or of the premises or a part thereof together with other space, and for a period of time the same as or different from the balance of the term hereunder remaining, and on terms and conditions the same as or different from those set forth in this Agreement. The Port Authority shall also, upon termination or cancellation pursuant to Section 16 of these Terms and Conditions, or upon re-entry, regaining or resumption of possession pursuant to Section 17 of these Terms and Conditions have the right to repair and to make structural or other changes in the premises, including changes which alter the character of the premises and the suitability thereof for the purposes of the Lessee under this Agreement, without affecting, altering or diminishing the obligations of the Lessee hereunder. In the event either of any reletting or of any actual use and occupancy by the Port Authority (the mere right to use and occupy not being sufficient however) there shall be credited to the account of the Lessee against its survived obligations hereunder any net amount remaining after deducting from the amount actually received from any lessee, licensee, permittee or other occupier in connection with the use of the said premises or portion thereof during the balance of the term of the letting as the same is originally stated in this Agreement, or from the market value of the occupancy of such portion of the premises as the Port Authority may itself during such period actually use and occupy, all expenses, costs and disbursements incurred or paid by the Port Authority in connection therewith. No such reletting or such use and occupancy shall be or be construed to be an acceptance of a surrender.

SECTION 21. *Remedies to Be Nonexclusive*

All remedies provided in this Agreement shall be deemed cumulative and additional and not in lieu of or exclusive of each other or of any other remedy available to the Port Authority at law or in equity, and the exercise of any remedy, or the existence herein of other remedies or indemnities shall not prevent the exercise of any other remedy.

SECTION 22. *Surrender*

(a) The Lessee covenants and agrees to yield and deliver peaceably to the Port Authority possession of the premises on the date of the cessation of the letting, whether such cessation be by termination, expiration or otherwise, promptly and in the same condition as at the commencement of the letting, reasonable wear arising from use of the premises to the extent permitted elsewhere in this Agreement, excepted.

(b) Unless the same are required for the performance by the Lessee of its obligations hereunder, the Lessee shall have the right at any time during the letting to remove from the premises, and, on or before the expiration or earlier termination of the letting, shall so remove its equipment, removable fixtures and other personal property, and all property of third persons for which it is responsible, repairing all damage caused by such removal. If the Lessee shall fail to remove such property on or before the termination or expiration of the letting, the Port Authority may remove such property to a public warehouse for deposit or may retain the same in its own possession and in either event may sell the same at public auction, the proceeds of which shall be applied: first, to the expenses of removal, including repair required thereby, and of storage and sale; second, to any sums owed by the Lessee to the Port Authority, with any balance remaining to be paid to the Lessee; if the expenses of such removal, repair, storage and sale shall exceed the proceeds of sale, the Lessee shall pay such excess to the Port Authority upon demand. The Lessee shall indemnify the Port Authority against all claims based on Port Authority action hereunder.

SECTION 23. *Acceptance of Surrender of Lease*

No agreement of surrender or to accept a surrender shall be valid unless and until the same shall have been reduced to writing and signed by the duly authorized representatives of the Port Authority and of the Lessee. Except as expressly provided in this Section, neither the doing of, nor any omission to do, any act or thing, by any of the officers, agents or employees of the Port Authority, shall be deemed an acceptance of a surrender of the letting or of this Agreement.

SECTION 24. *Notices*

(a) All notices, permissions, requests, consents and approvals given or required to be given to or by either party shall be in writing (which shall include a telegram when delivered to the telegraph company), and all such notices

and requests shall be telegraphed or personally delivered to the party or to the duly designated officer or representative of such party or delivered to an office or residence of such party, officer or representative during regular business hours, or delivered to the residence of such party, officer or representative or delivered to the premises, or forwarded to him or to the party at the office or residence address by registered mail. The Lessee shall designate an office within the Port of New York District and an officer or representative whose regular place of business is at such office. Until further notice, the Port Authority hereby designates its Executive Director, and the Lessee designates the person whose name appears on the first page of this Agreement as their respective officers or representatives upon whom notices and requests may be served, and the Port Authority designates its office at One World Trade Center, New York, New York 10048, and the Lessee designates its office, the address of which is set forth on the first page of this Agreement, as their respective offices where notices and requests may be served.

(b) If any notice is mailed or delivered, the giving of such notice shall be complete upon receipt or, in the event of a refusal by the addressee, upon the first tender of the notice to the addressee or at the permitted address. If any notice is sent by telegraph, the giving of such notice shall be complete upon receipt or, in the event of a refusal by the addressee, upon the first tender of the notice by the telegraph company to the addressee or at the address thereof.

SECTION 25. *General*

(a) Wherever in this Agreement the Lessee agrees or is required to do or has the right to do, any act or thing, the following shall apply:

(1) If the Lessee is a corporation, its obligation shall be performed by it and its rights shall be exercised only by its officers and employees or

(2) If the Lessee is a partnership, its obligations shall be performed and its rights shall be exercised by its partners and employees only or

(3) If the Lessee is an individual, his obligations shall be performed and his rights shall be exercised by himself and his employees only;

(4) None of the provisions of this paragraph (a) shall be taken to alter, amend or diminish any obligation of the Lessee assumed in relation to its invitees, business visitors, agents, representatives, contractors, customers, guests, or other persons firms or corporations doing business with it or using or on or at the premises with its consent.

(b) If more than one individual or other legal entity is the Lessee under this Agreement, each and every obligation hereof shall be the joint and several obligation of each such individual or other legal entity.

(c) Unless otherwise stated in Article IV on page 2 of this Agreement, the rights of user thereby granted to the Lessee with respect to the premises shall be exercised by the Lessee only for its own account and, without limiting the generality of the foregoing, shall not be exercised as agent, representative, factor, broker, forwarder, bailee, or consignee without legal title to the subject matter of the consignment.

(d) The Lessee's representative, hereinbefore specified in this Agreement, (or such substitute as the Lessee may hereafter designate in writing) shall have full authority to act for the Lessee in connection with this Agreement and any things done or to be done hereunder, and to execute on the Lessee's behalf any amendments or supplements to this Agreement or any extension thereof.

(e) The Section headings in these Terms and Conditions and in the endorsements, if any, attached hereto are inserted only as a matter of convenience and for reference, and they in no way define or limit or describe the scope or intent of any provision hereof.

(f) All payments required of the Lessee by this Agreement shall be made at the office of the Treasurer of the Port Authority, One World Trade Center, New York, New York 10048, or to such other officer or address as may be substituted therefor. If the commencement date of the letting under this Agreement is other than the first day of a calendar month, the basic rental for the portion of the month during which the letting is effective shall be the amount of the monthly installment prorated on a daily basis using the actual number of days in the month, and if the expiration or termination date of the letting is other than the last day of a calendar month, the basic rental for the portion of the month during which the letting is effective shall be the amount of the monthly installment similarly prorated.

(g) This Agreement does not constitute the Lessee the agent or representative of the Port Authority for any purpose whatsoever. Neither a partnership nor any joint adventure is hereby created, notwithstanding the fact that all or a portion of the rental to be paid hereunder may be determined by gross receipts from the operations of the Lessee hereunder.

(h) The phrase "utility, mechanical, electrical and other systems" shall mean and include (without limitation thereto) the following: machinery, engines, dynamos, boilers, elevators, escalators, incinerators and incinerator flues, systems for the supply of fuel, electricity, water, gas and steam, plumbing, heating, sewerage, drainage, ventilating, air conditioning, communications, fire-alarm, fire-protection, sprinkler, telephone, telegraph and other systems, fire hydrants, fire hoses, and their respective wires, mains, conduits, lines, tubes, pipes, equipment, motors, cables, fixtures and other equipment.

(i) All designations of time herein contained shall refer to the time-system then officially in effect in the municipality wherein the premises are located.

SECTION 26. *Premises*

(a) The Lessee acknowledges that it has not relied upon any representation or statement of the Port Authority or its Commissioners, officers, employees or agents as to the condition of the premises or the suitability thereof for the operations permitted on the premises by this Agreement. The Lessee, prior to the execution of this Agreement, has thoroughly examined the premises and has found them to be in good order and repair and determined them to be suitable for the Lessee's operations hereunder. Without limiting any obligation of the Lessee to commence operations hereunder at the time and in the manner stated elsewhere in this Agreement, the Lessee agrees that no portion of the premises will be used initially or at any time during the letting which is in a condition unsafe or improper for the conduct of the Lessee's operations hereunder so that there is possibility of injury or damage to life or property and the Lessee further agrees that before any use it will immediately correct any such unsafe or improper condition.

(b) The Port Authority shall not be liable to the Lessee, or to any person, for injury or death to any person or persons whomsoever, or damage to any property whatsoever at any time in the premises or elsewhere at the Facility, including but not limited to any such injury, death or damage from falling material, water, rain, hail, snow, gas, steam, or electricity, whether the same may leak into, or fall, issue, or flow from any part of the Facility, or from any other place or quarter.

(c) If permission is given to the Lessee to enter into the possession of the premises or to occupy space other than the premises prior to the date specified in Article II as the commencement of the term of the letting, the Lessee agrees that such possession or occupancy shall be deemed to be under all the terms, covenants, conditions and provisions of this Agreement except as to the covenant to pay rent and except as may be expressly provided otherwise by the written instrument, if any, giving such possession or occupancy; in either case, rent shall commence on the date specified in this Agreement, and in the event of possession of the premises, the date of such possession shall be the date of commencement of the term hereunder.

SECTION 27. *Postponement*

If the Port Authority shall not give possession of the premises on the date fixed in Article II for the commencement of the term, by reason of the fact that the premises or any part thereof are in the course of construction,

repair, alteration or improvement or by reason of the fact that the occupant thereof failed or refused to deliver possession to the Port Authority, or by reason of any cause or condition beyond the control of the Port Authority, the Port Authority shall not be subject to any liability for the failure to give possession on said date. No such failure to give possession on the date of commencement of the term shall in any wise affect the validity of this Agreement or the obligations of the Lessee hereunder, nor shall the same be construed in any wise to extend the term beyond the date stated in Article II for expiration. However, the rent shall not commence until possession of the premises is tendered by the Port Authority to the Lessee; the tender shall be made by notice given at least five (5) days prior to the effective date of the tender and in the event that such notice of tender is not given for possession to commence on or before one hundred eighty-five (185) days after the date stated in Article II for commencement of the term then this Agreement shall be deemed cancelled, except that each party shall and does hereby release the other party of and from any and all claims or demands based on this Agreement, or a breach or alleged breach thereof.

SECTION 28. *Force Majeure*

(a) The Port Authority shall not be liable for any failure, delay or interruption in performing its obligations hereunder due to causes or conditions beyond its control, including, without limitation thereto, strikes, boycotts, picketing, slow-downs, work stoppages or labor troubles of any other type (whether affecting the Port Authority, its contractors, or subcontractors). Further, the Port Authority shall not be liable unless the failure, delay or interruption shall result from failure on the part of the Port Authority to use reasonable care to prevent or reasonable efforts to cure such failure, delay or interruption.

(b) The Port Authority shall be under no obligation to supply any service or services if and to the extent and during any period that the supplying of any such service or services or the use of any component necessary therefor shall be prohibited or rationed by any federal, state or municipal law, rule, regulation, requirement, order or direction and if the Port Authority deems it in the public interest to comply therewith, even though such law, rule, regulation, requirement, order or direction may not be mandatory on the Port Authority as a public agency.

(c) No abatement, diminution or reduction of the rent or other charges payable by the Lessee, shall be claimed by or allowed to the Lessee for any inconvenience, interruption, cessation or loss of business or other loss caused, directly or indirectly, by any present or future laws, rules, requirements, orders, directions, ordinances or regulations of the United States of America, or of the state, county or city governments, or of any other municipal, governmental or lawful authority whatsoever, or by priorities, rationing or curtailment of labor or materials, or by war or any matter or thing resulting therefrom, or by any other cause or causes beyond the control of the Port Authority, nor shall this Agreement be affected by any such causes.

SECTION 29. *Brokerage*

The Lessee represents and warrants that no broker has been concerned in the negotiation of this Agreement and that there is no broker who is or may be entitled to be paid a commission in connection therewith. The Lessee shall indemnify and save harmless the Port Authority of and from any claim for commission or brokerage made by any and all persons, firms or corporations whatsoever for services in connection with the negotiation and execution of this Agreement.

SECTION 30. *Non-liability of Individuals*

Neither the Commissioners of the Port Authority nor any of them, nor any officer, agent, or employee thereof, shall be charged personally by the Lessee with any liability, or held liable to the Lessee under any term or provision of this Agreement, or because of its execution or attempted execution, or because of any breach, or attempted or alleged breach, thereof.

(a) The Port Authority agrees to grant (if requested so to do by the Lessee), to suppliers of water, gas, electricity and telephone service operating in the vicinity a right of way or rights of way under the Facility from the streets outside of the Facility to the premises for the sole purpose of supplying such service or services to the Lessee. No such right of way shall include the right to use any system, equipment or portion thereof constructed or owned by or leased to the Port Authority.

(b) The Lessee shall promptly pay all water bills covering its own consumption. Such payment shall include any factor which may have been included by the appropriate governmental authority as a sewer-rent or other charge for the use of a sewer system. In the event that any such water bill shall remain unpaid for a period of six (6) months after the same becomes due and payable, or in the event that any such bill remains unpaid at the date of expiration or earlier termination of the letting under this Agreement, the Port Authority may pay the same and any interest or penalties thereon, and the total payment or payments at any time so made shall constitute an additional item of rental, payable to the Port Authority upon demand. Where sewage is contained in tanks periodically cleaned by a contractor paid by the Port Authority the Lessee shall pay such portion of the contract charge as may be reasonably determined by the Port Authority, on demand.

(c) Unless the Port Authority has expressly undertaken to heat the enclosed portions of the premises, if any, the Lessee agrees to heat the enclosed portions of the premises to a sufficient temperature so that the plumbing, fire-protection and sprinkler systems, if any, will not be damaged by reason of low temperatures.

(d) If any federal, state, municipal or other governmental body, authority or agency, or any public utility, assesses, levies, imposes, makes or increases any charge, fee, rent or assessment on the Port Authority, for any service, system or utility now or in the future supplied to or available at the premises or to any tenant, lessee, occupant or user thereof, or to the structures or buildings which, or a portion or portions of which, are included in the premises, (including but not limited to any sewer-rent or other charge for the use of a sewer system or sysems), the Lessee shall, at the option of the Port Authority exercised at any time and from time to time by notice to the Lessee, pay, in accordance with such notice, such charge, fee, rent or assessment or such increase thereof (or the portion thereof allocated by the Port Authority to the premises or to the operations of the Lessee under this Agreement) either directly to the governmental body, authority or agency, or to the public utility, or directly to the Port Authority, as such notice may direct. All payments to be made by the Lessee hereunder shall constitute items of additional rental.

(e) No failure, delay or interruption in any service or services, whether such service or services shall be supplied by the Port Authority or by others, shall relieve or be construed to relieve the Lessee of any of its obligations hereunder or shall be or be construed to be an eviction of the Lessee, or shall constitute grounds for any diminution or abatement of the rental or rentals payable under this Agreement, or grounds for any claim by the Lessee for damages, consequential or otherwise.

(f) In the event any one or more structures within or attached to the premises but not accessible directly from the enclosed portion of the premises is or are in use as a valve-room or valve-rooms for a sprinkler system, the same shall not be deemed a portion of the premises hereunder, and the Lessee shall afford access thereto through and across the premises at all times as required by the Port Authority for itself or its contractors, with or without tools, equipment, parts and supplies.

Standard Endorsement No. L 5.1

Services

All Facilities

10/6/75

(a) As used in this Agreement:

(1) "Elizabeth-Port Authority Marine Terminal", "Elizabeth-Port Authority Piers", "Facility", or "marine terminal" shall mean the land and premises in the City of Elizabeth, in the County of Union and State of New Jersey, title to which was vested in the Port Authority by an Order Vesting Title in and Directing Delivery of Possession to The Port of New York Authority dated March 14, 1958, filed March 17, 1958 in the Superior Court of New Jersey, Law Division, Union County, Docket No. L-7065-56, in the case of The Port of New York Authority, plaintiff, vs. Edward J. Grassmann, et al., defendants, the lands title to which was so conveyed having been described fully in the Second Amended Complaint filed in the said case on May 16, 1957, and lands contiguous or adjacent thereto within the County of Union which may have been heretofore or may hereafter be acquired by the Port Authority to use for marine terminal purposes.

(2) "Letting" shall include any extension of the letting under this Agreement, whether made by agreement or by operation of law.

(3) "Manager of the Facility", "Facility Manager" or "Manager" shall mean the person or persons from time to time designated by the Port Authority to exercise the powers and functions vested in the said Manager or in the Superintendent of the Facility by this Agreement; but until further notice from the Port Authority to the Lessee, it shall mean the Manager (or the Acting Manager) Port Authority Marine Terminals-New Jersey for the time being, or his duly designated representative or representatives.

(b) The rights of the Port Authority in the Facility are those acquired by it pursuant to the order described in subparagraph (1) of paragraph (a) of this Standard Endorsement, together with those which may be acquired by any subsequent order or orders, deed or deeds, leases or other instruments transferring or assigning additional adjacent property, and no greater rights are granted or intended to be granted to the Lessee hereunder than the Port Authority has power thereunder to grant.

(c) No designation in this Agreement of any area as a street, highway, roadway or other comparable characterization, whether or not by name, shall be or be deemed to be an admission, recognition or acknowledgment of any public or private rights in the area so designated, or as a dedication for or a consent to any public or private use of the same. All use in this Agreement of names and designations in connection with such areas is merely for the purpose of fixing geographical locations.

(d) This Agreement and the letting hereunder are subject and subordinate to all mortgages which may now or hereafter affect the premises or the Facility and to all renewals, modifications, consolidations, replacements and extensions thereof, and the Lessee agrees to execute any instrument which may be deemed necessary or desirable further to effect the subordination of this Agreement and the letting hereunder to any and all such mortgages.

(e) Without in anywise limiting the obligations of the Lessee as elsewhere stated in this Agreement, the Lessee shall be liable to the Port Authority for all damage done to the Facility or to any part thereof or to any property of the Port Authority thereon through any act or omission of those in charge of or operating any vessels, steamers, barges, lighters, other floating equipment or any trucks, other vehicles or other transportation equipment, while any such is at, coming to, or leaving the premises.

(f) The Port Authority covenants and agrees that as long as it remains the owner of the premises, the Lessee, upon paying all rentals hereunder and performing all the covenants, conditions and provisions of this Agreement on its part to be performed, shall and may peaceably and quietly have, hold and enjoy the premises free of any act or acts of the Port Authority except as expressly permitted in this Agreement.

(g) If by the provisions of Article IV or by other express provision in this Agreement the Lessee is authorized to use the premises to store for distribution items of merchandise or other materials (whether for the account of the Lessee or of others, as may be specifically provided elsewhere in this Agreement) such storage shall be substantially for merchandise and materials waterborne to the Facility or intended to be waterborne from the Facility, except that as specifically authorized from time to time by the Port Authority, the Lessee may store non-waterborne items, the handling of which is necessary as an incident to its business at the premises. "Waterborne to (or from) the Facility" shall mean and include all shipments consigned to or from the Facility which reach or leave the Port of New York by water carrier.

(a) The Lessee in its own name as assured shall secure and pay the premium or premiums for such of the following policies of insurance affording those coverages as to which minimum limits are fixed in the schedule set forth below. Each such policy shall be maintained in at least the limit fixed with respect thereto, shall cover the operations of the Lessee under this Agreement, and shall be effective throughout the term of the letting.

SCHEDULE

	Policy	Minimum Limit
(1)	Commercial general liability insurance (to include contractual liability endorsement)	
	(i) Bodily-injury liability:	
	For injury or wrongful death to one person:	$10,000,000.00
	For injury or wrongful death to more than one person in any one occurrence:	$10,000,000.00
	(ii) Property-damage liability:	
	For all damages arising out of injury to or destruction of property in any one occurrence:	$10,000,000.00
	(iii) Products liability:	$ _____
(2)	Automotive liability insurance:	
	(i) Bodily-injury liability	
	For injury or wrongful death to one person:	$2,000,000.00
	For injury or wrongful death to more than one person in any one occurrence:	$2,000,000.00
	(ii) Property-damage liability:	
	For all damages arising out of injury to or destruction of property in any one occurrence:	$2,000,000.00
(3)	Plate and mirror glass insurance, covering all plate and mirror glass in the premises, and the lettering, signs, or decorations, if any, on such plate and mirror glass:	$ _____
(4)	Boiler and machinery insurance, covering all boilers, pressure vessels and machines operated by the Lessee in the premises:	$ _____
(5)	"Additional Interest" policy of boiler and machinery insurance, covering all boilers, pressure vessels and machines operated by the Lessee in the premises:	$ _____
(6)	Garagekeepers' legal liability:	$ _____

(b) The Port Authority shall be named as an additional insured in any policy of liability insurance required by this Endorsement, unless the Port Authority shall, at any time during the term of the letting under this Agreement, direct otherwise in writing, in which case the Lessee shall cause the Port Authority not to be so named.

(c) In any policy of insurance on property other than that of the Lessee required by this Endorsement, the Port Authority shall be named as the owner except that as to property as to which the Port Authority is itself a lessee, the Port Authority shall be named as the lessee and the owner shall be named as the owner. Each shall be endorsed substantially as follows:

> "Loss, if any, under this policy, as to the interest of the owner and as to the interest of the Port Authority of New York and New Jersey, shall be adjusted solely with the Port Authority and all proceeds under this policy shall be paid solely to the Port Authority."

(d) Any "Additional Interest" policy of boiler and machinery insurance required by this Endorsement shall provide protection under Sections 1 and 2 only of the Insuring Agreements of the form of policy approved for use as of the date hereof by the Insurance Rating Board, New York, New York.

(e) As to any insurance required by this Endorsement, a certified copy of each of the policies or a certificate or certificates evidencing the existence thereof, or binders, shall be delivered to the Port Authority within ten (10) days after the execution of this Agreement. In the event any binder is delivered, it shall be replaced within thirty (30) days by a certified copy of the policy or a certificate. Each such copy or certificate shall contain a valid provision or endorsement that the policy may not be cancelled, terminated, changed or modified, without giving ten (10) days' written advance notice thereof to the Port Authority. A renewal policy shall be delivered to the Port Authority at least fifteen (15) days prior to the expiration date of each expiring policy, except for any policy expiring after the date of expiration of the term of the letting under this Agreement, as the same may be form time to time extended. If at any time any of the policies shall be or become unsatisfactory to the Port Authority as to form or substance, of if any of the carriers issuing such policies shall be or become unsatisfactory to the Port Authority, the Lessee shall promptly obtain a new and satisfactory policy in replacement.

(f) Each policy of insurance required by this Endorsement shall contain a provision that the insurer shall not, without obtaining express advance permission from the General Counsel of the Port Authority, raise any defense involving in any way the jurisdiction of the tribunal over the person of the Port Authority, the immunity of the Port Authority, its Commissioners, officers, agents or employees, the governmental nature of the Port Authority or the provisions of any statutes respecting suits against the Port Authority.

(a) If at any time the Lessee shall become entitled to an abatement of basic rental under the provisions of this Agreement or otherwise, such abatement shall be computed as follows:

(1) For each square foot of usable open area the use of which is denied to the Lessee, at the annual rate of $1.79*

(2) For each square foot of usable covered area the use of which is denied to the Lessee, at the annual rate of $1.79*

(b) If no rates are filled in above then the abatement of basic rental shall be made on an equitable basis, giving effect to the amount and character of the area the use of which is denied the Lessee, as compared with the entire area of such character included in the premises.

(c) If an exemption amount is fixed in this Agreement, it shall be reduced in the same proportion as the total basic rental is abated.

(d) For the purposes of this Endorsement, the number of square feet of covered area shall be computed as follows: by measuring from the inside surface of outer building walls to the surface of the public area side, or of the non-exclusive area side, as the case may require, of all partitions separating the area measured from adjoining areas designated for the use of the public or for use by the Lessee in common with others, and to the center of partitions separating the area measured from adjoining area exclusively used by others; no deduction will be made for columns, partitions, pilasters or projections necessary to the building and contained within the area measured. Permanent partitions enclosing elevators shafts, stairs, fire towers, vents, pipe shafts, meter closets, flues, stacks and any vertical shafts have the same relation to the area measured as do outer building walls.

(e) In the event that during the term of the letting under this Agreement the Lessee shall be partially evicted (actually or constructively) and shall remain in possession of the premises or the balance thereof, the Lessee agrees that notwithstanding it might have the right to suspend payment of the rent in the absence of this provision, it will pay at the times and in the manner herein provided, the full basic rental less only an abatement thereof computed in accordance with the above.

* for the period commencing on September 1, 2001 and continuing through August 31, 2003, the rate thereafter to be adjusted during the term of the letting proportionately to the adjustment in basic rental in accordance with the provisions of Special Endorsement No. 3 hereto.

SPECIAL ENDORSEMENTS

1. The Lessee shall use the premises for the following purposes only, and for no other purpose whatsoever: (a) the receipt, handling, and storage predominately of cargo housed in containers, and also of non-containerized cargo, transported or to be transported by seagoing vessels permitted to be berthed in the "Berthing Area" (as such term is defined in Section 1(a) of Lease No. EP-249 between the parties and dated as of October 1, 2000 and hereinafter called "the Terminal Lease"), and the storage of ships' stores, supplies and gear on or from such seagoing vessels and other craft permitted to be berthed in the Berthing Area; (b) the parking of motor vehicles and of trailers and semi-trailers owned or operated by the Lessee or by the employees of the Lessee or by persons doing business with it at the Facility for the purposes set forth in this Special Endorsement; (c) the storage and repair of cargo containers, chassis, other cargo-handling equipment, and necessary amounts of dunnage used in the operations of the Lessee under this Agreement and the Terminal Agreement; and (d) such office space (with related automobile parking) incidental to and necessary for the foregoing operations of the Lessee.

2. The Lessee shall pay to the Port Authority an annual rental (hereinafter called "the basic rental") during the period from September 1, 2001 through August 31, 2015 at the rate of Two Million Four Hundred Three Thousand Eight Hundred Ten Dollars and Sixty-nine Cents ($2,403,810.69) per annum, payable in advance in equal monthly installments of Two Hundred Thousand Three Hundred Seventeen Dollars and Fifty-six Cents ($200,317.56) on September 1, 2001 and on the first day of each calendar month thereafter during such period. The basic rental set forth in this Special Endorsement shall be adjusted during the term of the letting in accordance with the provisions of Special Endorsement No. 3 to this Agreement.

3. (a) As used in paragraph (b) of this Special Endorsement:

(1) "Index" shall mean the Consumer Price Index for All Urban Consumers - New York-Northern New Jersey-Long Island, NY-NJ-CT (All Items, unadjusted 1982-84=100) published by the Bureau of Labor Statistics of the United States Department of Labor.

(2) "Base Period" shall mean the calendar month of August, 2001.

(3) "Adjustment Period" shall mean, as the context requires, the calendar month of August, 2003 and the calendar month of August in each calendar year which thereafter occurs alternately during the term of the letting under this Agreement.

(4) "Anniversary Date" shall mean, as the context requires, September 1, 2003 and each anniversary of such date which thereafter occurs alternately during the term of the letting under this Agreement.

(5) "Percentage Increase" shall mean the percentage of increase in the Index on each Anniversary Date equal to a fraction the numerator of which shall be the Index for the Adjustment Period immediately preceding such Anniversary Date less the Index for the Base Period and the denominator of which shall be the Index for the Base Period.

(b) Commencing on each Anniversary Date and for the period commencing with such Anniversary Date and continuing through to the day preceding the next Anniversary Date, or the expiration date of the term of the letting under this Agreement, as the case may be, both dates inclusive, in lieu of the basic rental set forth in Special Endorsement No. 2 hereto the Lessee shall pay a basic rental at a rate per annum equal to the greater of:

(1) the sum obtained by adding to the basic rental set forth in Special Endorsement No. 2 hereto the product obtained by multiplying such basic rental by one hundred percent (100%) of the Percentage Increase for such Anniversary Date, or

(2) the basic rental payable immediately prior to such Anniversary Date including all amounts included therein as a result of prior adjustments thereof pursuant to the provisions of this paragraph, or

(3) the amount set forth in the Schedule annexed to this Agreement, hereby made a part hereof, and marked "Schedule A" opposite the respective Anniversary Date.

Notwithstanding any other provision of this Agreement, the basic annual rental that shall be payable pursuant to Special Endorsement No. 2 hereto and this Special Endorsement commencing with each Anniversary Date and continuing through to the day preceding the following Anniversary Date, or the expiration date of the term of the letting under this Agreement, as the case may be, both dates inclusive, shall in no event exceed the amount set forth in the Schedule annexed to this Agreement, hereby made a part hereof, and marked "Schedule B" opposite the respective Anniversary Date. For example, if the Percentage Increase for the calendar month of August, 2003 is shown to be five percent (5%) then the basic annual rental payable under Special

Endorsement No. 2 hereto and this Special Endorsement for the two-year period commencing September 1, 2003 shall be $2,403,810.69 plus five percent (5%) thereof or $2,524,001.22, but if (1) said increase is shown to be three percent (3%) then the basic annual rental for that two-year period shall be $2,500,924.64, and if (2) said increase is shown to be ten percent (10%) then the basic annual rental for that two-year period shall be $2,599,961.64.

(c) In the event the Index to be used in computing any adjustment referred to in paragraph (b) of this Special Endorsement is not available on the effective date of such adjustment, the Lessee shall continue to pay the basic rental at the annual rate then in effect subject to retroactive adjustment at such time as the specified Index becomes available, provided, however, that the Port Authority may at its option substitute for such Index the Index for the latest preceding month then published to constitute the specified Index. In the event the United States Consumer Price Index for All Urban Consumers - New York-Northern New Jersey-Long Island, NY-NJ-CT (All Items, unadjusted 1982-84=100) shall hereafter be converted to a different standard reference base or otherwise revised or the United States Department of Labor shall cease to publish the United States Consumer Price Index for All Urban Consumers - New York-Northern New Jersey-Long Island, NY-NJ-CT (All Items, unadjusted 1982-84=100), then for the purposes hereof there shall be substituted for the Index such other appropriate index or indices properly reflecting changes in the value of current United States money in a manner similar to that established in the Index used in the latest adjustment as the Port Authority may in its discretion determine.

If after an adjustment in basic rental shall have been fixed for any period, the Index used for computing such adjustment shall be changed or adjusted, then the rental adjustment for that period shall be recomputed and from and after notification of the change or adjustment, the Lessee shall make payments based upon the recomputed rental and upon demand shall pay any excess in the basic rental due for such period as recomputed over amounts theretofore actually paid on account of the basic rental for such period. If such change or adjustment results in a reduction in the basic rental due for any period prior to notification, the Port Authority will credit the Lessee with the difference between the basic rental as recomputed for that period and amounts of basic rental actually paid.

If any adjustment of basic rental referred to in paragraph (b) of this Special Endorsement is effective on a day other than the first day of a calendar month, there shall be

payable in advance on the effective date of rental adjustment an installment of basic rental equal to 1/12th of the increment of annual basic rental as adjusted multiplied by a fraction, the numerator of which shall be the number of days from the effective date of the rental adjustment to the end of the calendar month in which the rental adjustment was effective and the denominator of which shall be the number of days in that calendar month.

4. Abatement of basic rental, if any, to which the Lessee may be entitled shall be computed in accordance with the provisions of Standard Endorsement No. L27.4 attached hereto and hereby made a part hereof.

5. (a) The policy of commercial general liability insurance required by Standard Endorsement No. L21.1 to this Agreement (i) shall include a contractual liability endorsement covering the Lessee's indemnity obligations under this Agreement; (ii) without limiting any other provision of the Agreement, shall include the Port Authority as an additional insured for purposes of both premises operations and completed-operations; (iii) shall not exclude claims arising out of or in connection with operations conducted within fifty feet of railroad property; and (iv) shall include coverage for the Lessee's liability for physical loss or damage to cargo in the Lessee's care, custody or control. If the Lessee's operations entail the ownership, maintenance, operation, or use of any watercraft, whether owned, non-owned, or hired, the Lessee shall have any exclusion for such watercraft deleted or shall purchase equivalent coverage under a policy of Protection and Indemnity Insurance and shall provide the Port Authority with a certificate of insurance evidencing such coverage. The policy of automobile liability insurance required by said Standard Endorsement No. L21.1 shall cover all owned, non-owned and hired vehicles. (b) In addition to the policies of insurance required under said Standard Endorsement No. L21.1, the Lessee in its own name as assured shall secure and pay the premium or premiums for a policy of Environmental Liability Insurance, with a minimum combined single limit coverage for bodily injury and property damage for both gradual and sudden occurrences of $5,000,000.00. (c) Each policy of insurance required by said Standard Endorsement No. L21.1 and the policies of Protection and Indemnity Insurance and of Environmental Liability Insurance shall contain an endorsement providing that the protections afforded the Lessee thereunder with respect to any claim or action against the Lessee by a third party shall pertain and apply with like effect with respect to any claim or action against the Lessee by the Port Authority and against the Port Authority by the Lessee, but said endorsement shall not limit, vary, change or affect the protections afforded the Port Authority as an additional insured.

SPECIAL ENDORSEMENTS

6. Notwithstanding anything contained in Special Endorsement No. 5 to this Agreement or in Standard Endorsement No. L21.1 annexed to this Agreement, it is specifically understood and agreed that the Port Authority shall have the right upon notice to the Lessee given from time to time and at any time to require the Lessee to increase any or all of the limits set forth in said Special Endorsement No. 5 or said Standard Endorsement No. L21.1 to commercially reasonably amounts and the Lessee shall promptly comply therewith and shall promptly submit a certificate or certificates evidencing the same to the Port Authority.

7. The Lessee shall secure and maintain in its own name as assured and shall pay the premiums on the following policy of insurance in the limit set forth below, which policy shall be effective during the term of the letting under this Agreement:

(1) All risk property damage insurance covering the full replacement cost of any property owned, leased, or within the care, custody or control of the Lessee and now or in the future located on or constituting a part of the premises, except for any personal property owned by the Port Authority. Full replacement cost shall be determined by the Port Authority. No omission on the part of the Port Authority to make such determination shall relieve the Lessee of its obligations to maintain the appropriate insurance under this Special Endorsement. Such insurance shall cover and insure against such hazards and risks as at least would be insured against under the Standard Form of Fire Insurance policy in the State of New Jersey, or any successor thereto, and the broadest form of extended coverage endorsement prescribed as of the effective date of said insurance by the rating organization having jurisdiction, including without limitation hazards and risks of flood, earthquake, windstorm, cyclone, tornado, hail, explosion, riot, civil commotion, aircraft, vehicles and smoke, and, if the Port Authority so requests, also covering nuclear property losses and contamination and boiler and machinery hazards and risks (if said coverage regarding nuclear property losses and contamination is or becomes available).

(2) Unless otherwise directed by the Port Authority, the property damage insurance policy required by this Special Endorsement shall name the Port Authority and the Lessee (with insurance clauses consistent with the provisions of this Agreement) as the insureds, as their respective interests may appear, and shall provide that loss,

if any, shall be adjusted with and payable to the Port Authority. As to any insurance required by this Special Endorsement, a certificate of insurance, or binders, shall be delivered by the Lessee to the Port Authority simultaneously with the delivery of an executed copy of this Agreement by the Lessee. In the event any binder is delivered, it shall be replaced within thirty (30) days by a certificate of insurance. Each such policy shall contain a valid provision or endorsement that the policy may not be cancelled, terminated, changed or modified, without giving at least thirty (30) days' written advance notice thereto to the Port Authority and an endorsement to the effect that the insurance as to the interest of the Port Authority shall not be invalidated by any act or negligence of the Lessee or any other insured. Each policy of insurance shall have attached thereto an endorsement that the Port Authority will be given at least thirty (30) days' prior notice of any material change in the policy. A certificate of insurance with respect to a renewal policy shall be delivered to the Port Authority at least fifteen (15) days prior to the expiration date of each expiring policy, except for any policy expiring after the date of expiration of the effective term hereof. If at any time the policy required by this Special Endorsement shall be or become unsatisfactory to the Port Authority as to form or substance, or if the carrier issuing such policy shall be or become unsatisfactory to the Port Authority, the Lessee shall promptly obtain a new and satisfactory policy in replacement.

The proceeds of insurance from coverages secured in accordance with this Special Endorsement shall be made available to the Lessee and shall be applied by the Lessee strictly and solely to the repair, replacement, or rebuilding of the premises as elsewhere provided in this Agreement.

8. The Lessee shall secure and maintain in its own name as assured and shall pay the premiums on the Standard Form of "All Risk" insurance policy insuring the full replacement value of all of the Lessee's trade fixtures, equipment and other personal property. The Port Authority shall not be liable to the Lessee for loss or damage caused by any risk covered by said policy of insurance. Said policy of insurance shall be subject to the provisions of paragraph (e) of Standard Endorsement No. L21.1 to this Agreement, and shall contain an endorsement waiving any rights of subrogation of the insurer against the Port Authority.

9. The Lessee acknowledges that the premises are located on a former landfill facility and that hazardous wastes

and substances, including but not limited to polyclorinated biphenyl contaminated waste oil, have been located at the premises (which hazardous wastes and substances are hereinafter called "the Existing Wastes"). The Lessee agrees that in its use and occupancy of and in the conduct of its operations at the premises: (a) the Lessee shall make every effort not to conduct or allow any activity that causes or results in any penetration, breakage, cracking or other damage to the paved surface of the premises, and in the event that any said damage shall occur to said paved surface, the Lessee shall repair or replace the same with extreme promptness; (b) except as set forth in the immediately succeeding sentence of this paragraph, the Lessee shall in no event engage in or allow any removal, excavation or disruption of the landfill or soil at the premises; and (c) the Lessee shall make every effort not to conduct or allow any other activity that causes or results in any exacerbation of the condition of the premises with respect to the Existing Wastes. The Lessee shall be permitted to remove, excavate or disrupt the landfill or soil at the premises solely on the following conditions (which removal, excavation and/or disruption is hereinafter called "the Excavation Work"): (aa) the Lessee shall obtain the consent of the Port Authority for the performance of any of the Excavation Work, and the performance of the Excavation Work shall be subject to the terms and conditions of the Lease and an approved Construction Application which the Lessee shall prepare and submit to the Port Authority and to such further procedures, requirements and directions as the Port Authority shall determine; (bb) the Lessee shall obtain any required approval of any governmental entity, including without limitation the New Jersey Department of Environmental Protection, having jurisdiction over the performance of the Excavation Work and shall perform the Excavation Work in accordance with any laws, rules, regulations, requirements, orders or directives of any such governmental entity or entities; and (cc) the Lessee shall pay all of the costs and expenses of, arising out of, or resulting from, the performance of the Excavation Work, including without limitation all costs of the disposal of any soil and of obtaining any governmental permits or other governmental authorizations applicable to the performance the Excavation Work. Without limiting the generality of any provisions of this Agreement, and subject to the provisions of Special Endorsement No. 11 hereto, the Lessee shall maintain and repair the paved surface of the premises in accordance with any laws, rules, regulations, requirements, orders or directives of any governmental entity, including without limitation the New Jersey Department of Environmental Protection, that may at any time apply to said paved surface during the term of the letting.

SPECIAL ENDORSEMENTS

10. Without limiting the generality of any provisions of this Agreement, including without limitation the provisions of Section 13 of the Terms and Conditions hereof, the Port Authority, by its officers, employees, agents, representatives and contractors, shall have the right at any time and from time to time during the term of the letting to enter upon the premises for the purpose of conducting environmental testing and/or environmental remediation. Said environmental testing may include, without limitation, soil borings, the establishing and maintenance of wells for the testing or monitoring of groundwater, and the gathering and removal of soil or groundwater from the premises. The Lessee shall make available such portion or portions of the premises for such period or periods that the Port Authority shall determine to be necessary for the performance of said environmental testing and/or environmental remediation, and the Lessee shall not damage or disrupt or allow any damage to or disruption of any wells, equipment or other devices employed in said environmental testing, and further the Lessee shall conduct its operations on the premises in such a way so as not to interfere with the performance of any of said environmental testing or environmental remediation. All of the rights of the Port Authority under this paragraph may be made available to any third party designated by the Port Authority acting in its sole discretion. Without limiting the generality of any provisions of this Agreement, including without limitation the provisions of Section 13(g) of the Terms and Conditions hereof, the exercise of any or all of the foregoing rights by the Port Authority or others shall not be or be construed to be an eviction of the Lessee nor be made the grounds for any abatement of rental nor any claim or demand for damages, consequential or otherwise.

11. Without limiting the generality of any provisions of this Agreement, the Lessee shall not dispose of, release or discharge, nor permit anyone to dispose of, release or discharge any hazardous waste or substance on or from the premises or at the Facility. Any hazardous waste or substance disposed of, released or discharged by the Lessee or permitted by the Lessee to be disposed of, released or discharged on or from the premises or at the Facility shall, upon notice by the Port Authority to the Lessee and subject to the provisions of Section 11 of the Terms and Conditions hereof, be completely removed and/or remediated by the Lessee. Further, the Lessee undertakes and agrees that it shall be obligated to comply with the requirements of all environmental laws, rules, regulations, requirements, orders and directives of any governmental entity which may pertain or apply to its operations or to its use and occupancy of the premises under this Agreement. The obligations of the Lessee

pursuant to this Special Endorsement shall survive the expiration or termination of this Agreement.

12. The provisions of Sections 2, 4, 6, 7, and 19(b)(2) of the Terms and Conditions of this Agreement and of Special Endorsement No. 11 to this Agreement shall not apply to the Existing Wastes; provided, however, that the provisions of said Sections and Special Endorsement shall apply to the Existing Wastes in the event that any disposal of, release or discharge of the Existing Wastes or any portion thereof on or from the premises or at the Facility is caused by or results from the acts or omissions of the Lessee or of others on the premises or at the Facility with its consent; and further provided, that, the provisions of said Sections and Special Endorsement shall apply to the Existing Wastes to the extent that the presence of the Existing Wastes does not impose any additional cost or expense upon the Lessee with respect to its compliance with the provisions of said Sections or Special Endorsement.

13. The Port Authority shall have the right to temporarily terminate the letting of portions of the premises under this Agreement up to a total of six (6) acres at any one time, without cause, at any time and from time to time during "the Port Redevelopment Period", as such term is hereinafter defined, upon thirty (30) days' written notice to the Lessee (each of which portion of the terminated premises is hereinafter individually called "the Temporarily Surrendered Space"). The aforesaid notice shall designate the exact size, location and configuration of the Temporarily Surrendered Space and the effective date of the termination. Termination under the provisions of this Special Endorsement shall have the same effect as if the effective date of termination stated in the aforesaid notice were the date of expiration of the term of the letting of the Temporarily Surrendered Space under this Agreement. The Lessee shall provide to the Port Authority and/or any designee of the Port Authority a fully adequate right of entry through the premises under this Agreement for the purpose of ingress and egress at all times between the Temporarily Surrendered Space and such pedestrian or vehicular ways used in common with others having rights of passage within the Facility and providing access to the premises as the Port Authority shall determine from time to time acting in its sole discretion. The Temporarily Surrendered Space shall be returned to the leasehold on or before the end of "the Port Redevelopment Period", upon thirty (30) days' written notice from the Port Authority to the Lessee, and upon the effective date stated in said notice the Temporarily Surrendered Space shall be and become part of the premises under this Agreement, subject to and in accordance with all the terms, provisions, covenants and conditions hereof, including without

limitation the escalated basic rental as provided for in Special Endorsement No. 3 hereto. Without limiting the generality of any provision of this Agreement, the Lessee shall be entitled to an abatement of the basic rental payable under the provisions of Special Endorsements No. 2 and No. 3 hereto for the period from the effective date of the termination of the Temporarily Surrendered Space to the effective date of its return to the leasehold as set forth in the immediately preceding sentence, with said abatement to be computed in accordance with the provisions of Standard Endorsement No. L27.4 hereto. For purposes of this Agreement, "the Port Redevelopment Period" shall mean the period commencing on September 1, 2001 and ending on December 31, 2007; provided, however, that any notice of termination under this Special Endorsement may be given by the Port Authority to the Lessee on or before August 2, 2001, such that the premises under this Agreement on the commencement of the term of the letting on September 1, 2001 may be reduced by up to six (6) acres in accordance with the provisions of this Special Endorsement.

14. (a) The Lessee shall not discriminate against employees or applicants for employment because of race, creed, color, national origin, sex, age, disability or marital status, and shall undertake or continue existing programs of affirmative action to ensure that minority group persons and women are afforded equal employment opportunity without discrimination. Such programs shall include, but not be limited to, recruitment, employment, job assignment, promotion, upgrading, demotion, transfer, layoff, termination, rates of pay or other forms of compensation, and selections for training or retraining, including apprenticeship and on-the-job training.

(b) In addition to and without limiting the foregoing, it is hereby agreed that the Lessee, in connection with its continuing operation, maintenance and repair of the premises, or any portion thereof, and in connection with every award or agreement for concessions or consumer services at the Facility, shall throughout the Term commit itself to and use good faith efforts to implement an extensive program of Affirmative Action, including specific affirmative action steps to be taken by the Lessee, to ensure maximum opportunities for employment and contracting by minorities and women. In meeting the said commitment the Lessee agrees to submit its said extensive Affirmative Action program, including the specific affirmative action steps to be taken by the Lessee to meet its aforesaid commitment, within sixty (60) days after the commencement of the Term to the Port Authority for its review and approval. The Lessee shall incorporate in its said program such revisions and changes as the Port Authority and the Lessee may agree upon from

time to time. The Lessee throughout the Term shall document its efforts in implementing the said program, shall keep the Port Authority fully advised of the Lessee's progress in implementing the said program and shall supply to the Port Authority such information, data and documentation with respect thereto as the Port Authority may from time to time and at any time request, including but not limited to, annual reports. The obligations imposed on the Lessee under this paragraph shall not be construed to impose any greater requirements on the Lessee than those which may be imposed on the Lessee under applicable law.

(c) "Minority" as used herein includes:(i) Black (all persons having origins in any of the Black African racial groups not of Hispanic origin);(ii) Hispanic (all persons of Mexican, Puerto Rican, Dominican, Cuban, Central or South American culture or origin, regardless of race); (iii) Asian and Pacific Islander (all persons having origins in any of the original peoples of the Far East, Southeast Asia, the Indian Subcontinent, or the Pacific Islands); and (iv) American Indian or Alaskan Native (all persons having origins in any of the original peoples of North America and maintaining identifiable tribal affiliations through membership and participation or community identification).

(d) In the implementation of this Special Endorsement the Port Authority may consider compliance by the Lessee with the provisions of any federal, state or local law concerning affirmative action equal employment opportunity which are at least equal to the requirements of this Special Endorsement, as effectuating the provisions of this Special Endorsement. If the Port Authority determines that by virtue of such compliance with the provisions of any such federal, state or local law that the provisions hereof duplicate or conflict with such law the Port Authority may waive the applicability of the provisions of this Special Endorsement to the extent that such duplication or conflict exists.

(e) Nothing herein provided shall be construed as a limitation upon the application of any laws which establish different standards of compliance or upon the application of requirements for the hiring of local or other area residents.

(f) Nothing in this Special Endorsement shall grant or be deemed to grant to the Lessee the right to make any agreement or award for concessions or consumer services at the Facility.

15. The Lessee shall have the right to install, maintain and operate or permit the installation, maintenance and

operation on the premises of vending machines or devices designed to dispense or sell food, beverages, tobacco, tobacco products or merchandise of any kind, whether or not included in the above categories, and shall also have the right to install, maintain and operate or permit the installation, maintenance and operation on the premises of a small kitchen, for the benefit of officers and employees of the Lessee and their families and business guests of such officers and employees, and which machines and kitchen shall be operated at no profit to the Lessee and shall be installed, maintained and/or operated either directly by the Lessee or by an independent contractor(s) of the Lessee who has/have received a permit or permits from the Port Authority so to do; provided, however, that in the event any operation permitted under this Special Endorsement violates health regulations and upon notice of termination of such operation from the Port Authority, the Lessee or the independent contractor(s), as the case may be, shall immediately cease such operation as specified in said notice. The Lessee agrees that the aforesaid installation(s) shall be performed subject to the terms and conditions of the Lease and an approved Construction Application which the Lessee shall prepare and submit to the Port Authority.

16. If the Lessee should fail to pay any amount required under this Agreement when due to the Port Authority, including without limitation any payment of rental or any payment of utility fees or charges, or other charges or fees, or if any such amount is found to be due as the result of an audit, then, in such event, the Port Authority may impose (by statement, bill or otherwise) a late charge with respect to each such unpaid amount for each late charge period hereinbelow described during the entirety of which such amount remains unpaid, each such late charge not to exceed an amount equal to eight-tenths of one percent of such unpaid amount for each late charge period. There shall be twenty-four late charge periods during each calendar year; each late charge period shall be for a period of at least fifteen (15) calendar days except one late charge period each calendar year may be for a period of less than fifteen (but not less than thirteen) calendar days. Without limiting the generality of the foregoing, late charge periods in the case of amounts found to have been owing to the Port Authority as the result of Port Authority audit findings shall consist of each late charge period following the date the unpaid amount should have been paid under this Agreement. Each late charge shall be payable immediately upon demand made at any time therefor by the Port Authority. No acceptance by the Port Authority of payment of any unpaid amount or of any unpaid late charge amount shall be deemed a waiver of the right of the Port Authority to payment of any late charge or late charges payable under the provisions of this Special Endorsement, with respect to such unpaid amount.

Each late charge shall be and become additional rent, recoverable by the Port Authority in the same manner and with like remedies as if it were originally a part of the rentals as set forth in this Agreement. Nothing in this Special Endorsement is intended to, or shall be deemed to, affect, alter, modify or diminish in any way (i) any rights of the Port Authority under this Agreement, including without limitation the Port Authority's rights set forth in Section 16 of the Terms and Conditions of this Agreement entitled "Termination" or (ii) any obligations of the Lessee under this Agreement. In the event that any late charge imposed pursuant to this Special Endorsement shall exceed a legal maximum applicable to such late charge, then, in such event, each such late charge payable under this Agreement shall be payable instead at such legal maximum.

17. Prior to the execution of this Agreement by either party hereto, the following changes were made in the Terms and Conditions of this Agreement:

(a) The phrase "or (iii) to cancel this Agreement and terminate the letting as to the entire premises;" appearing in the fifth and sixth lines of paragraph (a)(2) of Section 8 thereof was deleted therefrom.

(b) The following clause was inserted following the word "conveyance" appearing in the sixth line of Section 10 thereof:

> ", except for the possible claim to an award for trade fixtures installed by the Lessee and/or an award for moving expenses if (i) such claim is then allowed by law and (ii) such award is made separate and apart from the award made or to be made to the Port Authority in such proceeding and any such award to the Lessee will not directly or indirectly reduce the amount of compensation payable to the Port Authority;"

(c) The following clause was inserted following the word "premises" appearing as the last word in the last line of paragraph (c) of Section 14 thereof:

> "(except to the extent required for the placement of lights and utilities, the placement and operation of equipment (excluding container cranes) on the premises and the movement and storage of containers, chassis and other cargo). If any construction or

installation is performed under this Agreement or on the premises hereunder, the height thereof above ground shall be as determined solely by the Port Authority."

(d) Paragraphs (a) and (b) of Section 15 thereof were deleted therefrom and the following paragraphs were inserted in lieu thereof:

"(a) The Lessee shall not do or permit to be done anything which may interfere with the effectiveness or accessibility of the drainage and sewerage system, water system, communications system, fuel system, electrical, fire-protection system, sprinkler system, alarm system, fire hydrants and hoses and other systems, if any, installed or located on, under, or in the premises.

(b) The Lessee shall not dispose of nor permit any one to dispose of any waste material (whether liquid or solid) by means of the toilets, manholes, sanitary sewers or storm sewers in the premises or on the Facility except after treatment in installations or equipment included in plans and specifications submitted to and approved by the Port Authority.

(c) The Lessee shall not operate any engine or any item of automotive equipment in any enclosed space on the premises unless such space is adequately ventilated and unless such engine or item of automotive equipment is equipped with a proper spark arresting device which has been approved by the Port Authority.

(d) The Lessee shall not fuel or defuel its automotive vehicles or other equipment in the enclosed portions of the premises without the prior approval of the Manager of the Facility.

(e) The Lessee shall not keep or store in the premises, explosives, inflammable liquids or solids or oxidized materials or use any cleaning materials having a harmful corrosive effect on any part of the premises.

SPECIAL ENDORSEMENTS

(f) The Lessee shall not use or permit the use of any truss or structural supporting member of the building or roof or any part thereof for the storage of any material or equipment, or to hoist, lift, move or support any material or equipment or other weight or load, by means of said trusses or structural supporting members unless said trusses or structural supporting members are specifically designed for such use.

(g) The Lessee shall not fuel or defuel equipment in the enclosed portions of the premises without prior approval of the Manager of the Facility."

(e) The phrase "as at the commencement of the letting, reasonable wear arising from use of the premises to the extent permitted elsewhere in this Agreement, excepted" following the word "condition" appearing in the third line of paragraph (a) of Section 22 thereof was deleted and the following phrase was inserted in lieu thereof:

"required by the provisions of Section 7(b) hereof regarding the condition of the premises at the expiration or termination of the letting hereunder"

Initialled:

For the Port Authority

For the Lessee

SCHEDULE A

September 1, 2003	2,500,924.64
September 1, 2005	2,601,962.00
September 1, 2007	2,707,081.26
September 1, 2009	2,816,447.35
September 1, 2011	2,930,231.82
September 1, 2013	3,048,613.18

SCHEDULE B

September 1, 2003	2,599,961.64
September 1, 2005	2,812,118.51
September 1, 2007	3,041,587.38
September 1, 2009	3,289,780.91
September 1, 2011	3,558,227.04
September 1, 2013	3,848,578.36

Form - All-Purpose Ack. N.Y. (rev 9/1/99)

STATE OF NEW YORK)
) ss.
COUNTY OF NEW YORK)

On the 25th day of MAY in the year 2001, before me, the undersigned, a Notary Public in and for said state, personally appeared RICHARD M. LARRABEE DIRECTOR, PORT COMMERCE DEPT, personally known to me or proved to me on the basis of satisfactory evidence to be the individual(s) whose name(s) is (are) subscribed to the within instrument and acknowledged to me that he/she/they executed the same in his/her/their capacity(ies), and that by his/her/their signature(s) on the instrument, the individual(s), or the person upon behalf of which the individual(s) acted, executed the instrument.

Millie Dominguez
(notarial seal and stamp)

MILLIE DOMINGUEZ
Notary Public, State of New York
No. 01DO6051706
Qualified in Bronx County
Commission Expires December 04, 2002

STATE OF New Jersey)
) ss.
COUNTY OF Hudson)

On the 25th day of April in the year 2001, before me, the undersigned, a Notary Public in and for said state, personally appeared M. BRIAN MAHER, personally known to me or proved to me on the basis of satisfactory evidence to be the individual(s) whose name(s) is (are) subscribed to the within instrument and acknowledged to me that he/she/they executed the same in his/her/their capacity(ies), and that by his/her/their signature(s) on the instrument, the individual(s), or the person upon behalf of which the individual(s) acted, executed the instrument.

Barbara J. Wurz
(notarial seal and stamp)

Barbara J. Wurz
Notary Public, State of New Jersey
Registered in Essex County
My Commission Expires July 25, 2001

Port Authority Lease No. EP-251
Supplement No. 1

SUPPLEMENTAL AGREEMENT

THIS AGREEMENT, made as of April 19, 2007, by and between THE PORT AUTHORITY OF NEW YORK AND NEW JERSEY (hereinafter called "the Port Authority") and MAHER TERMINALS LLC,

WITNESSETH, That:

WHEREAS, heretofore and as of September 1, 2001, the Port Authority and Maher Terminals, Inc. entered into an agreement of lease (hereinafter, as the said agreement of lease has been heretofore amended, modified and supplemented, called "the Lease") covering premises at the Elizabeth-Port Authority Marine Terminal, in the City of Elizabeth, County of Union and State of New Jersey; and

WHEREAS, heretofore and on or about December 31, 2006, Maher Terminals, Inc. was merged into a corporation of the same name and such corporation was converted into a limited liability company (hereinafter called "the Lessee"); and

WHEREAS, the Port Authority and the Lessee desire to amend the Lease;

NOW, THEREFORE, for and in consideration of the mutual agreements hereinafter contained the Port Authority and the Lessee hereby agree as follows:

1. (a) Effective as of 11:59 o'clock P.M. on the "Surrender Date" (as such term is defined in subparagraph (h) of this paragraph), the Lessee has granted, bargained, sold, surrendered and yielded up and does by these presents grant, bargain, sell, surrender and yield up to the Port Authority, its successors and assigns, forever, that part of the premises let to the Lessee constituting the "Surrendered Area" (as such term is defined in subparagraph (f) of this paragraph), and the term of years with respect thereto under the Lease as herein amended yet to come and has given, granted and surrendered and by these presents does give, grant and surrender to the Port Authority, its successors and assigns, all the rights, rights of renewal, licenses, privileges and options of the Lessee granted by the Lease as herein amended with respect to the Surrendered Area all to the intent and purpose that the said term under the Lease as herein amended and the said rights, rights of renewal, licenses, privileges and options may be wholly merged, extinguished and

determined on the Surrender Date with the same force and effect as if the said term were in and by the provisions of the Lease as herein amended originally fixed to expire on such date; to have and to hold the same unto the Port Authority, its successors and assigns forever.

(b) The Lessee hereby covenants on behalf of itself, its successors and assigns that (i) it has not done or suffered and will not do or suffer anything whereby the Surrendered Area, or the Lessee's leasehold therein, has been or shall be encumbered, as of the Surrender Date in any way whatsoever; (ii) the Lessee is and will remain until the Surrender Date the sole and absolute owner of the leasehold estate in the Surrendered Area and of the rights, rights of renewal, licenses, privileges and options granted by the Lease as herein amended with respect thereto and that the same are and will remain until the Surrender Date free and clear of all liens and encumbrances of whatsoever nature; and (iii) the Lessee has full right and power to make this Agreement.

(c) All promises, covenants, agreements and obligations of the Lessee with respect to the Surrendered Area under the Lease as herein amended or otherwise which under the provisions thereof would have matured upon the date originally fixed in the Lease as herein amended for the expiration of the term thereof, or upon the termination of the Lease as herein amended prior to the said date, or within a stated period after expiration or termination, shall, notwithstanding such provisions, mature upon the Surrender Date and shall survive the partial surrender provided for in this paragraph.

(d) The Lessee has released and discharged and does by these presents release and discharge the Port Authority from any and all obligations on the part of the Port Authority to be performed under the Lease as herein amended with respect to the Surrendered Area for that portion of the term subsequent to the Surrender Date. The Port Authority does by these presents release and discharge the Lessee from any and all obligations on the part of the Lessee to be performed under the Lease as herein amended with respect to the Surrendered Area for that portion of the term subsequent to the Surrender Date; it being understood that nothing herein contained shall release, relieve or discharge the Lessee from any liability for rentals or for other charges that may be due or become due to the Port Authority for any period or periods prior to the Surrender Date, or for breach of any other obligation on the Lessee's part to be performed under the Lease as herein amended for or during such period or periods or maturing pursuant to subparagraph (c) of this paragraph.

(e) In consideration of the making of this Agreement by the Port Authority, the Lessee hereby agrees to terminate its occupancy of the Surrendered Area and to deliver actual physical possession of the same to the Port Authority on or before the Surrender Date in the condition required by the Lease as herein amended upon surrender. The Lessee further agrees that it will remove from the Surrendered Area its equipment, removable fixtures and other personal property, and all property of third persons for which it is responsible, repairing all damage caused by such removal. If the Lessee shall fail to remove such property on or before the Surrender Date, the Port Authority may remove such property to a public warehouse for deposit or may retain the same in its own possession and in either event may sell the same at public auction, the proceeds of which shall be applied: first, to the expenses of removal, including repair required thereby, and of storage and sale; second, to any sums owed by the Lessee to the Port Authority, with any balance remaining to be paid to the Lessee; if the expenses of such removal, repair, storage and sale shall exceed the proceeds of sale, the Lessee shall pay such excess to the Port Authority upon demand. The Lessee shall indemnify the Port Authority against all claims based on Port Authority action hereunder.

(f) The term "Surrendered Area" shall mean all or a part of the premises shown in diagonal crosshatching and designated as "Area of Partial Surrender (permanent)" on the sketch attached hereto, hereby made a part hereof and marked "Exhibit PS-1". The determination of whether the Surrendered Area shall constitute all of such area or part of it, and in the latter case the size, location and configuration thereof, shall be made by the Port Authority acting in its sole discretion. The Port Authority shall provide the Lessee with written notice prior to the Surrender Date of the Port Authority's determination of the Surrendered Area and if the Surrendered Area is less than all of the space designated as Area of Partial Surrender (permanent) on Exhibit PS-1 annexed hereto, the Port Authority and the Lessee shall enter into an agreement supplementary to the Lease as herein amended containing a space exhibit showing the Surrendered Area.

(g) The Port Authority and the Lessee agree that from and after the Surrender Date, the basic rental payable under the Lease shall be abated at the annual rate equal to the product obtained by multiplying (1) the number of square feet constituting the Surrendered Area by (2) the abatement rate applicable thereto from time to time under Special Endorsement No. L27.4 annexed to the Lease.

(h) The term "Surrender Date" shall mean the date set forth in written notice given by the Port Authority to the

Lessee as the date that the Surrendered Area is required in connection with the performance of work on the ExpressRail Elizabeth second lead track and/or the Bay Avenue relocation project (hereinafter called "the Rail Work").

2. (a) The Lessee hereby grants to the Port Authority, its employees, agents, representatives, contractors, subcontractors and designees a right of entry and exclusive occupancy and possession of all or a portion of that part of the premises let to the Lessee constituting "the Temporarily Surrendered Area" (as such term is defined in subparagraph (b) of this paragraph) for its use by the Port Authority in connection with the performance of the Rail Work (which right of entry and exclusive occupancy and possession of said portion of the premises is hereinafter called "the Temporary Surrender"). The Temporary Surrender shall commence on "the Temporary Surrender Date" (as such term is defined in subparagraph (c) of this paragraph) and shall terminate on the date set forth in written notice given by the Port Authority to the Lessee as the date that the Temporarily Surrendered Area is no longer of use in connection with the performance of the Rail Work (which date, as so determined, is hereinafter called "the Exit Date"). The Lessee shall be entitled to an abatement of the basic rental payable under the Lease at the annual rate equal to the product obtained by multiplying (1) the number of square feet constituting the Temporarily Surrendered Area by (2) the abatement rate applicable thereto from time to time under Special Endorsement No. L27.4 annexed to the Lease commencing on the Temporary Surrender Date and continuing through the Exit Date, except that if the Temporary Surrender Date shall be a day other than the first day of a calendar month then the monthly abatement amount allowable for the month in which the Temporary Surrender Date shall occur shall be prorated based on the number of days from the Temporary Surrender Date through the last day of the month in which the Temporary Surrender Date shall occur, and if the Exit Date shall be a day other than the last day of a calendar month then the monthly abatement amount allowable for the month in which the Exit Date shall occur shall be prorated based on the number of days from the first day of the month in which the Exit Date shall occur through the Exit Date. Nothing contained in this agreement shall or shall be deemed to create any obligation on the part of the Port Authority to perform any or all of the Rail Work.

(b) The term "Temporarily Surrendered Area" shall mean all or a part of the premises shown in diagonal hatching and designated as "Areas of temporary Partial Surrender" on Exhibit PS-1 annexed hereto. The determination of whether the Temporarily Surrendered Area shall constitute all of such area or part of it, and in the latter case the size, location and

configuration thereof, shall be made by the Port Authority acting in its sole discretion. The Port Authority shall provide the Lessee with written notice prior to the Temporary Surrender Date of the Port Authority's determination of the Temporarily Surrendered Area and if the Temporarily Surrendered Area is less than all of the space designated as Areas of temporary Partial Surrender on Exhibit PS-1 annexed hereto, the Port Authority and the Lessee shall enter into an agreement supplementary to the Lease as herein amended containing a space exhibit showing the Temporarily Surrendered Area.

(c) The term "Temporary Surrender Date" shall mean the date set forth in written notice given by the Port Authority to the Lessee as the date that the Temporarily Surrendered Area is required in connection with the performance of the Rail Work.

(d) During the period of the Temporary Surrender, the Temporarily Surrendered Area shall be and be deemed to be removed from the premises under the Lease as herein amended, and the Lessee shall not have the obligations set forth in the Lease as herein amended with respect to the Temporarily Surrendered Area during the period of the Temporary Surrender including, without limitation, responsibility for the activities thereon by the Port Authority or by third parties. Nothing set forth in the immediately preceding sentence shall limit in any way the rights of the Port Authority under law with respect to the Lessee apart from such rights as shall arise directly from the Lease as herein amended.

(e) During the period of the Temporary Surrender, the Port Authority shall install and maintain such fencing and/or other devices to secure the boundaries of the Temporarily Surrendered Area and the remainder of the premises as shall be reasonably required for the safety of persons and property at the premises.

3. In addition to the rights granted to the Port Authority under paragraphs 1 and 2 of this Agreement, the Port Authority shall perform such work in the Temporarily Surrendered Area as it shall determine in its sole discretion for the purpose of relocating the entry area to the premises in connection with the Rail Work (which relocation work is hereinafter called "the Entry Relocation Work"). The Entry Relocation Work shall be performed by the Port Authority in substantial conformity with the nine (9) pages of the Port Authority's plans attached hereto and hereby made a part hereof, entitled "EXPRESSRAIL - ELIZABETH LEAD TRACKS AND SOUTH BAY AVENUE", dated 11/13/2006, and bearing the following drawing numbers: S003, T012, T013, C017, C018, C033, C034, C055 and C056.

4. As hereby amended, all the terms, provisions, covenants and conditions of the Lease shall continue in full force and effect.

5. The Lessee represents and warrants that no broker has been concerned in the negotiation of this Agreement and that there is no broker who is or may be entitled to be paid a commission in connection therewith. The Lessee shall indemnify and save harmless the Port Authority of and from all claims for commission or brokerage made by any and all persons, firms or corporations whatsoever for services in connection with the negotiation or execution of this Agreement.

6. Neither the Commissioners of the Port Authority nor any of them, nor any officer, agent or employee thereof, shall be charged personally by the Lessee with any liability, or held liable to the Lessee under any term or provision of this Agreement, or because of its execution or attempted execution, or because of any breach, or attempted or alleged breach thereof.

7. This Agreement, together with the Lease (to which it is supplementary) constitutes the entire agreement between the Port Authority and the Lessee on the subject matter, and may not be changed, modified, discharged or extended except by instrument in writing duly executed on behalf of both the Port Authority and the Lessee. The Lessee agrees that no representations or warranties shall be binding upon the Port Authority unless expressed in writing in the Lease or in this Agreement.

IN WITNESS WHEREOF, the Port Authority and the Lessee have executed these presents as of the date first above written.

ATTEST:

THE PORT AUTHORITY OF NEW YORK AND NEW JERSEY

By _____

(Title) RICHARD M. LARRABEE DIRECTOR, PORT COMMERCE DEPT.

(Seal)

WITNESS:

MAHER TERMINALS LLC

_____ Secretary

By _____

(Title) Chief Executive Officer

APPROVED:

FORM	TERMS

Form - All-Purpose Ack. N.Y. (rev 9/1/99)

STATE OF NEW YORK)
) ss.
COUNTY OF NEW YORK)

On the 15th day of October in the year 2007, before me, the undersigned, a Notary Public in and for said state, personally appeared RICHARD M. LARRABEE DIRECTOR, PORT COMMERCE DEPT., personally known to me or proved to me on the basis of satisfactory evidence to be the individual(s) whose name(s) is (are) subscribed to the within instrument and acknowledged to me that he/she/they executed the same in his/her/their capacity(ies), and that by his/her/their signature(s) on the instrument, the individual(s), or the person upon behalf of which the individual(s) acted, executed the instrument.

Lucy Ambrosino
(notarial seal and stamp)

LUCY AMBROSINO
NOTARY PUBLIC, STATE OF NEW YORK
No. 01AM6101070
QUALIFIED IN NEW YORK COUNTY
MY COMMISSION EXPIRES NOV. 3, 2011

STATE OF New Jersey)
) ss.
COUNTY OF Union)

On the 19th day of September in the year 2007, before me, the undersigned, a Notary Public in and for said state, personally appeared Basil Maher & Scott Schley, personally known to me or proved to me on the basis of satisfactory evidence to be the individual(s) whose name(s) is (are) subscribed to the within instrument and acknowledged to me that he/she/they executed the same in his/her/their capacity(ies), and that by his/her/their signature(s) on the instrument, the individual(s), or the person upon behalf of which the individual(s) acted, executed the instrument.

Virginia S. Kochan
(notarial seal and stamp)

VIRGINIA S. KOCHAN
Notary Public, State of New Jersey
Registered in Union County
My Commission Expires Aug. 12, 2011