Torres Rojas, Genara

FOIL 1391

From:	craig.irwin@wedbush.com
Sent:	Friday, January 13, 2012 10:37 AM
To:	Duffy, Daniel
Cc:	Torres Rojas, Genara; Van Duyne, Sneree
Subject:	Freedom of Information Online Request Form

Information:

First Name: Craig
Last Name: Irwin
Company: Wedbush Securities
Mailing Address 1: 90 Park Avenue
Mailing Address 2:
City: New York
State: NY
Zip Code: 10016
Email Address: craig.irwin@wedbush.com
Phone: 212-938-9926
Required copies of the records: Yes

List of specific record(s):
We would like to request--dating back to 2006--all summary reports, internal analysis, tender documents, and funding disbursed for the procurement, trials and testing of LED lighting fixtures in roadway and tunnel applications. Our request specifically excludes LED traffic lights. Aside from the September 2007 press release we understand and observe, as a daily customer there have been several LED fixture trials in the Holland Tunnel since 2007. Various tenders have also taken place, including the most recent 4292011 tender. On the most recent LED lighting tender we would look for details on intended scope and agency requirements for a purchase if there has yet to be any final commitment. Thank you for your help and consideration in executing this Freedom of Information request. Sincerely, Craig Irwin

THE PORT AUTHORITY OF NY & NJ

Daniel D. Duffy
FOI Administrator

December 4, 2012

Mr. Craig Irwin
Wedbush Securities
90 Park Avenue
New York, NY 10016

Re: Freedom of Information Reference No. 12917

Dear Mr. Irwin:

This is a response to your January 13, 2012 request, which has been processed under the Port Authority's Freedom of Information Code (the "Code", copy attached) for copies of records related to LED lighting fixtures from 2006 to the present.

Material responsive to your request and available under the Code can be found on the Port Authority's website at http://www.panynj.gov/corporate-information/foi/12917-O.pdf. Paper copies of the available records are available upon request.

Certain material responsive to your request is exempt from disclosure pursuant to exemption (4) of the Code.

Please refer to the above FOI reference number in any future correspondence relating to your request.

Very truly yours,

Daniel D. Duffy
FOI Administrator

attachment

225 Park Avenue South
New York., NY 10003
T: 212 435 3642 F: 212 435 7555

CREATIVE LIGHTING SOLUTIONS

LED LIGHTS & ACCESSORIES

877.877.2340 CREATIVELIGHTINGS.COM

INVOICE

Date: 02/25/2011 **Order#:** **8174**

Order Comments:

MFG Order - ETA 2-3 Weeks to ship. Thank you! No returns once on truck for delivery. Delivery must be taken on speacial orders such as this thank you so mcuh . KL 03/31/11

Bill To: (Customer ID#2226)

Port Authority / NY / NJ
Stuart Stahl
New Jersey Service Garage #2
13th & Provost St.
Jersey City, NJ 07310
United States
201-360-5003
sstahl@panynj.gov

Ship To:

Port Authority / NY / NJ
Stuart Stahl
New Jersey Service Garage #2
13th & Provost St.
Jersey City, NJ 07310
United States
201-360-5003

Payment Method:

Credit Card: MasterCard
Stephen Olmo

Shipping Method:

UPS Ground

Code	Description	Qty	Price	Total
CL-SMDT8-8-DW40W648-SP	**LED T8 Tube Light, 8ft, Day White, 40W, 648 LEDs, 90V-277V**	**40**	$125.00	$5,000.00
^ DOCS-T8-INSTALL	**Installation Docs/Warning Labels for T8 LED Tube Lights**	**40**	$0.00	$0.00
DSC-CL-SHIPDISC	**Shipping Discount (Free Ship)**	1	-$68.50	-$68.50

Subtotal: $4,931.50
Tax: $0.00
Shipping & Handling: $68.50
Grand Total: $5,000.00

*** Please remit any payments to:*
Creative Lighting Solutions - A/R, 27245 Capel Road, Columbia Station, OH 44028

PLEASE NOTE: NET 30 Accounts are due paid in full 30 days after shipping. Interest will accrue monthly on overdue accounts as follows:
0-30 Days: 0% 30-60 Days: 1.5% 60-90 Days: 2.5%

THE PORT AUTHORITY OF NY & NJ
1 Madison Avenue, 7th Floor, New York NY 10010

Date 04/07/2011

REQUEST FOR QUOTATION

Collective# 0000024420
Bid Due Date 04/29/2011
Bids must be received no later than 11:00 AM on the above Bid Due Date.

Contact person/Telephone
Shanta Nelson/212-435-3980

Deliver Goods/Services To:
Holland Tunnel
13th Street & Provost Street
Jersey City NJ 07302

Quantity	Description	Unit Price	Total
	LED Lamps Delivery To: Holland Tunnel 13th & Provost Street Jersey City, New Jersey 07302 Attn: Stephen Olmo Note: Please contact Stephen Olmo 24 hours prior to delivery for instructions. Attachments: "DIVISION 16 SECTION 16555C LIGHT EMITTING DIODE (LED) DIRECT REPLACEMENT LAMP" and "APPENDIX A SUBMITTAL REQUIREMENTS" dated 4/6/11 to be made part of this contract. Note: Submittal requirements listed in "APPENDIX A SUBMITTAL REQUIREMENTS" shall be submitted within five(5) business days of notification from the Port Authority to determine compliance with the requirements specified in the document entitled. "DIVISION 16. SECTION 16555C. LIGHT EMITTING DIODE (LED) DIRECT REPLACEMENT LAMP" A price preference of 10 % is available for NY/NJ Minority and Women Business Enterprises (M/WBE) or 5% for NY/NJ Small Business Enterprises (SBE) certified by the Port Authority (PA) by the day before bid opening for awards not exceeding $1,000,000. My firm was certified as a _____on_____. ****QUOTE ONLY FULLY DELIVERED PRICES*******		
	PLEASE QUOTE FULLY DELIVERED PRICES — PAYMENT TERMS	Total Delivered Price	

This Quotation is subject to the terms and conditions set forth on the back page hereof. Bidder is advised to read these before signing.

We have read the instructions and, if favored with an order, we agree to furnish the items enumerated herein at the prices and under the conditions indicated.

Signed _____
Firm Name _____
Telephone number_____Date_____
Fax Number_____
Federal Taxpayer ID _____

Bidder Must Sign In Two Places

NOTICE TO BIDDERS: Unless the following term of assurance that the above offer is irrevocable is signed, the offer submitted herein shall not be deemed to be complete.

The foregoing offer shall be irrevocable for 90 days after the date on which the Port Authority of New York and New Jersey opens this proposal.

Signed_____Date_____
Firm Name_____

THE PORT AUTHORITY OF NY & NJ
1 Madison Avenue, 7th Floor, New York NY 10010

Date 04/07/2011

REQUEST FOR QUOTATION

Bid Due Date
04/29/2011

Quantity	Description	Unit Price	Total
	This is a Formal Bid Invitation Mail Sealed Bids to: The Port Authority of NY & NJ Attn: Bid Custodian Procurement Department One Madison Avenue, 7th Floor New York, N.Y. 10010 by the date and time listed above, where it will be publicly opened and read. Bids are only accepted Monday through Friday, excluding Port Authority holidays,between the hours of 8 A.M. & 5 P.M., via regular mail,express delivery service or hand delivery. If you do not use or have an envelope provided, you must clearly mark the outside envelope/package with 'BID ENCLOSED' and show the company name, address, as well as Bid number and Due date as stated on this bid document. A valid photo id is required to gain access into the building, to attend the bid opening or hand deliver a bid.		
	LED LAMPS		
	PLEASE QUOTE FULLY DELIVERED PRICES — PAYMENT TERMS	Total Delivered Price	

This Quotation is subject to the terms and conditions set forth on the back page hereof. Bidder is advised to read these before signing.

We have read the instructions and, if favored with an order, we agree to furnish the items enumerated herein at the prices and under the conditions indicated.

Signed _____
Firm Name _____
Telephone number_____Date_____
Fax Number_____
Federal Taxpayer ID _____

Bidder Must Sign In Two Places

NOTICE TO BIDDERS: Unless the following term of assurance that the above offer is irrevocable is signed, the offer submitted herein shall not be deemed to be complete.

The foregoing offer shall be irrevocable for 90 days after the date on which the Port Authority of New York and New Jersey opens this proposal.

Signed_____Date_____
Firm Name_____

THE PORT AUTHORITY OF NY & NJ
1 Madison Avenue, 7th Floor, New York NY 10010

REQUEST FOR QUOTATION

Bid Due Date
04/29/2011

Quantity	Description	Unit Price	Total
	Furnish and deliver light emitting diode (LED) lamp to replace existing 96-inch (GE Model 15358, F96/T12 75W, single-pin base) and 72-inch (GE Model 13743, F72/T12, 55W, single-pin base) fluorescent tubular lamps used for providing tunnel roadway illumination. The LED lamps will be installed by the Port Authority in existing light fixtures using the existing sockets and will be enclosed inside gasketed tempered glass tubes. The retrofitted lighting system shall meet the current Illuminating Engineering Society of North America RP-22-05 Recommended Practices for Tunnel Lighting. The procurement will be in two parts: 1. PRE-PRODUCTION TESTING: The Port Authority will purchase twenty-four (24) LED lamps (each ninety-six (96)-inches in length) and two (2) LED lamps (each seventy-two (72)-inches in length) from the selected manufacturer for a pre-production evaluation. The pre-production lamps shall be delivered to the Port Authority within forty-five (45) calendar days upon written notification from the Port Authority. Payment shall be net sixty (60) days. All pre-production LED lamps shall be of identical design, components, and assembly. 2. PURCHASE OF REMAINING LED LAMPS: Contingent upon verification, testing, and at the sole discretion of the Authority, the balance - quantity of three thousand six hundred and forty seven (3,647) 96-inch and fifty-eight (58) 72-inch		
	PLEASE QUOTE FULLY DELIVERED PRICES — PAYMENT TERMS	Total Delivered Price	

This Quotation is subject to the terms and conditions set forth on the back page hereof. Bidder is advised to read these before signing.

We have read the instructions and, if favored with an order, we agree to furnish the items enumerated herein at the prices and under the conditions indicated.

Signed _____
Firm Name _____
Telephone number _____ Date _____
Fax Number _____
Federal Taxpayer ID _____

Bidder Must Sign In Two Places

NOTICE TO BIDDERS: Unless the following term of assurance that the above offer is irrevocable is signed, the offer submitted herein shall not be deemed to be complete.

The foregoing offer shall be irrevocable for 90 days after the date on which the Port Authority of New York and New Jersey opens this proposal.

Signed _____ Date _____
Firm Name _____

THE PORT AUTHORITY OF NY & NJ
1 Madison Avenue, 7th Floor, New York NY 10010

REQUEST FOR QUOTATION

Bid Due Date
04/29/2011

Quantity	Description	Unit Price	Total
	lamps will be purchased. All specification requirements and test criteria shall be binding to the procurement of the lamps for permanent installation. Payment shall be net thirty (30) days. Pricing: (60) 72" LED lamps x $_____ = $_____ (3,671) 96" LED Lamps x $_____ = $_____ Grand Total $_____ NOTE: Since the wattage of the new LED lamps has ongoing impacts on the operating costs of the tunnel, the Port Authority is seeking the most efficient lamp at the best pricing. Accordingly, the bid shall be adjusted to reflect the energy efficiency of the LED lamp. The adjustment shall be applied only to those lamps exceeding 5.00 watts per foot. Lamps exceeding 6.00 watts per foot shall not be accepted. For lamps 5.00 watts or less, the adjustment will equal zero (0). The adjustment is being added to the base bid price for evaluation purposes only. If applicable, please note the total adjustment for lamps that exceed 5.00 watts per foot, up to 6.00 watts per foot below, based on the following formulas:		
	PLEASE QUOTE FULLY DELIVERED PRICES — PAYMENT TERMS	Total Delivered Price	

This Quotation is subject to the terms and conditions set forth on the back page hereof. Bidder is advised to read these before signing.

We have read the instructions and, if favored with an order, we agree to furnish the items enumerated herein at the prices and under the conditions indicated.

Signed _____
Firm Name _____
Telephone number_____Date_____
Fax Number_____
Federal Taxpayer ID _____

Bidder Must Sign In Two Places

NOTICE TO BIDDERS: Unless the following term of assurance that the above offer is irrevocable is signed, the offer submitted herein shall not be deemed to be complete.

The foregoing offer shall be irrevocable for 90 days after the date on which the Port Authority of New York and New Jersey opens this proposal.

Signed_____Date_____
Firm Name_____

THE PORT AUTHORITY OF NY & NJ
1 Madison Avenue, 7th Floor, New York NY 10010

Date 04/07/2011

REQUEST FOR QUOTATION

Bid Due Date
04/29/2011

Quantity	Description	Unit Price	Total
	60" Lamps: ___(wattage of lamp)- 5 x 6 x 60 x 8760 x 0.145 x 5 ÷ 1000= $ _____ 72" Lamps: ___(wattage of lamp)- 5 x 8 x 3671 x 8760 x 0.145 x 5 ÷1000= $ _____ Grand Total: $ _____		
1	**The item covers the following services:** LED LAMPS		
	PLEASE QUOTE FULLY DELIVERED PRICES — PAYMENT TERMS	**Total Delivered Price**	

This Quotation is subject to the terms and conditions set forth on the back page hereof. Bidder is advised to read these before signing.

We have read the instructions and, if favored with an order, we agree to furnish the items enumerated herein at the prices and under the conditions indicated.

Signed _____
Firm Name _____
Telephone number_____Date_____
Fax Number_____
Federal Taxpayer ID _____

Bidder Must Sign In Two Places

NOTICE TO BIDDERS: Unless the following term of assurance that the above offer is irrevocable is signed, the offer submitted herein shall not be deemed to be complete.

The foregoing offer shall be irrevocable for 90 days after the date on which the Port Authority of New York and New Jersey opens this proposal.

Signed_____Date_____
Firm Name_____

PA2809-03

TERMS AND CONDITIONS

1. The Port Authority (PA) reserves the right to request information relating to seller's responsiblity, experience and capability to perform the work.
2. Unless otherwise provided, complete shipment of all items must be in one delivery FOB delivery point. Payment will not be made on partial deliveries unless authorized in advance by the party to be charged and the discount, if any, will be taken on the total order.
3. PA payment terms are net 30 days. Cash discounts for prompt payment of invoices may be taken but will not be considered in determining award, except in the case of tie bids.
4. Separate unit and total FOB delivered prices must be shown.
5. Sales to the PA and to PATH are currently exempt from New York and New Jersey State and local taxes and generally from federal taxation. The seller certifies that there are no federal, state, municipal or any other taxes included in the prices shown hereon.
6. The PA shall have the absolute right to reject any or all proposals or to accept any proposal in whole or part and to waive defects in proposals.
7. Unless the phrase "no substitute" is indicated, bidder may offer alternate manufacturer / brands, which shall be subject to Port Authority approval. Please indicate details of product being offered with bid.
8. Acceptance of seller's offer will be only by Purchase Order Form signed by the PA. No change shall be made in the agreement except in writing.
9. If the seller fails to perform in accordance with the terms of this purchase order, the PA may obtain the goods or services from another contractor and charge the seller the difference in price, if any, a reletting cost of $100, plus any other damages to the PA.
10. Upon request, sellers are encouraged to extend the terms and conditions of any terms agreement with the PA to other government and quasi-government entities by separate agreement.
11. By signing this quotation or bid, the seller certifies to all statements on Form PA 3764 regarding non-collusive bidding; compliance with the PA Code of Ethics; and the existence of investigations, indictments, convictions, suspensions, terminations, debarments and other stated occurrences to assist the PA in determining whether there are integrity issues which would prevent award of the contract to the seller. The PA has adopted a policy set forth in full on PA 3764, that it will honor a determination by an agency of the State of New York or New Jersey that a bidder is not eligible to bid on or be awarded public contracts because the bidder has been determined to have engaged in illegal or dishonest conduct or to have violated prevailing wage legislation. The Terms and Conditions of PA 3764 apply to this order. A copy can be obtained by calling (212) 435-3902 or at http://www.panynj.gov/pdf/PA3764.pdf.
12. The vendor may subcontract the services or use a supplier for the furnishing of materials required hereunder to such persons or entities as the Manager, Purchasing Services may from time to time expressly approve in writing. All further subcontracting shall also be subject to such approval.
13. The successful bidder (vendor) shall not issue nor permit to be issued any press release, advertisement, or literature of any kind, which refers to the Port Authority or that goods will be, are being or have been provided to it and/or that services will be, are being or have been performed for it in connection with this Agreement, unless the vendor first obtains the written approval of the Port Authority. Such approval may be withheld if for any reason the Port Authority believes that the publication of such information would be harmful to the public interest or is in any way undesirable.

DIVISION 16

SECTION 16555C

LIGHT EMITTING DIODE (LED) DIRECT REPLACEMENT LAMP

PART I – GENERAL

1.01 SUMMARY

A. The specification describes the requirements for a light emitting diode (LED) lamp to replace existing 96-inch (GE Model 15358, F96/T12 75W, single-pin base) and 72-inch (GE Model 13743, F72/T12, 55W, single-pin base) fluorescent tubular lamps used for providing tunnel roadway illumination. The LED lamps will be installed by the Port Authority in existing light fixtures using the existing sockets and will be enclosed inside gasketed tempered glass tubes. For details of existing installation, see Appendix C. The retrofitted lighting system shall meet the current Illuminating Engineering Society of North America RP-22-05 Recommended Practices for Tunnel Lighting.

B. The procurement will be in two parts:

1. PRE-PRODUCTION TESTING: The Port Authority will purchase twenty-four (24) 96" LED lamps and two (2) 72" lamps. Lamps will be purchased for the purpose of testing and verification that all requirements of the specifications are met. Additional testing will be performed by the Port Authority to verify electromagnetic compatibility and electromagnetic interference (EMC/EMI) with existing radio systems operating inside the tunnel.

2. PURCHASE OF REMAINING LED LAMPS: Contingent upon verification, testing, and at the sole discretion of the Port Authority, all specification requirements and test criteria shall be binding to the procurement of the lamps for permanent installation.

1.02 REFERENCES

A. The LED lamp described in this specification shall meet the requirements of the following standards, codes, and regulatory agencies:

1. American National Standards Institute (ANSI)

   a. ANSI C 2 - National Electrical Safety Code

   b. ANSI C78.377- 2008 - Specifications for the Chromaticity of Solid State Lighting Products

   c. ANSI C82.SSL1- Power Supply

   d. ANSI C82.77-2002 - Harmonic Emission Limits – Related Power Quality Requirements for Lighting

2. American Association of State and Highway Transportation Officials (AASHTO)

3. American Society for Testing and Materials (ASTM)

4. Department of Defense

a. MIL-STD-461F – Requirements for the Control of Electromagnetic Interference and Emissions Susceptibility (This requirement is applicable to 1.01.B.1, Purchase of Remaining LED Lamps).

5. Department of Energy (DOE)
   a. LED Luminaire Lifetime: Recommendations for Testing and Reporting
6. Federal Communications Commission (FCC)
   a. 47 CFR Part 15 - Radio Frequency Devices Underwriters Laboratories
7. Federal Trade Commission (FTC)
   a. The Energy Policy Act of 1992
   b. Lamp Efficiency Labeling and Standards
8. Illuminating Engineering Society of North America (IESNA)
   a. TM-16-05 - Technical Memorandum on Light Emitting Diode (LED) Sources and Systems
   b. RP-22-05 - Recommended Practices for Tunnel Lighting
   c. LM-71-96 - Approved Guide for Photometric Measurement of Tunnel Lighting Installations
   d. LM-80-08 - Lumen Maintenance
9. National Fire Protection Association (NFPA)
   a. NFPA 101- Life Safety Code
   b. NFPA 70-2005 - National Electrical Code International Building Code, New Jersey Edition (NJ IBC)
10. New York City Electrical Code (NYCEC)
11. The International Code Council (ICC) Unified Building Code
12. Underwriters Laboratories (UL)
   a. UL 1598 - Retrofit Luminaire Conversions
   b. UL 8750 - Outline of Investigation for Light-Emitting Diode (LED) Light Sources for Use in Lighting Products

1.03 DESIGN AND PERFORMANCE REQUIREMENTS

A. The LED lamp shall be designed to meet all requirements of IESNA RP-22-05, including but not limited to: veiling luminance, flicker effect, luminance values, and uniformity. The LED lamp shall conform to all references listed in paragraph 1.02. Maintained luminance of the interior zone shall be a minimum of five-candela per square meter (5 cd/sqm) at the road surface, with a uniformity ratio below 3:1. Average pavement luminance of the interior zone shall meet IESNA RP-22-05 for Heavy traffic at 35 mph. The tunnel wall up to ten (10) feet above the roadway shall have at least an average luminance of one-third of the average roadway level as defined in the IESNA RP-22-05 standard.

B. The LED lamp shall be designed for continuous operation under the following environmental conditions:

1. Temperature: Minus twenty (-20) degrees centigrade to plus forty-five (45) degrees centigrade.
2. Humidity: Eighty (80) percent relative humidity.

C. Lamp and lamp components shall be Restriction of Hazardous Substances (RoHS) compliant.

D. Lamp power consumption shall not exceed 6.00 watts per foot. (Measured at a twenty-five (25) degree centigrade ambient temperature and two hundred and seventy-seven (277) Volts).

E. Lumen depreciation cannot exceed 30% over a five (5)-year period based on running the lamp 100% of the time.

1.04 QUALITY ASSURANCE

A. Entities manufacturing lamps and lamp components specified herein shall have a minimum of three years manufacturing experience in LED lighting production.

B. Lamps and lamp components for which there is a nationally recognized standard shall be safety tested by a Nationally Recognized Testing laboratory, such as Underwriters Laboratories Inc. (UL), or approved equal, and bear conformance labeling by the third party inspection authority certifying that the lamp or lamp component is listed as suitable for the purposes specified.

1.05 DELIVERY, STORAGE, AND HANDLING

A. Deliver materials in unopened protective packaging. Handle materials in a manner to prevent damage. Any lamps damaged during shipping shall be replaced at no cost to the Port Authority.

1.06 SUBMITTALS

A. See Appendix A for submittal requirements.

PART II – PRODUCTS

2.01 MANUFACTURERS

A. Subject to compliance with the requirements of this Section, diodes shall be as made by one of the below manufacturers or an approved equal as determined by the Port Authority:

1. AVAGO
2. CREE
3. LUMILED
4. NICHIA
5. OSRAM/SYLVANIA

B. All diodes shall be from one manufacturer; the use of diodes from multiple manufacturers will not be accepted.

2.02 MATERIALS

A. Any item, accessory or component not identified in the specifications but necessary or required for the proper fabrication, installation or operation in carrying out the intent of these specifications, shall be furnished as though they were specifically delineated, described, or mentioned.

B. Light Emitting Diodes (LEDs):

1. All LED's shall be "InGaN" Indium Gallium Nitride technology and L70 life rated for 50,000 hours @ 25°C ambient.

2. All supplied LEDs shall fall within a two-step MacAdam Ellipse, as per IESNA LM-80.

3. All LED's shall have a Color Rendering Index (CRI) of 70+.

4. All LED's shall have a Color Temperature of 6500°K or less. Lamps consisting of diodes with major varying degrees of color temperature will not be accepted.

C. LED Lamp Construction

1. LED lamps shall be ninety-six (96)-inches and seventy-two (72)-inches in length. No other lengths are acceptable.

2. LED lamps shall not exceed T12 in diameter. However, all lamps, regardless of length, shall be of the same diameter.

3. LED lamp shall be designed for mounting in existing fluorescent single pin connection.

4. Optical System:

a. The optical system shall provide adequate light distribution onto roadway and minimize disabling glare.

b. For optimum light distribution, all light must exit the lamp in 100° - 120° cone.

c. Asymmetric distribution is preferred.

d. Manufacturer to provide means or marks on LED lamp to facilitate field aiming the lamp in order to comply with the manufacturer's computer modeling.

5. Lampshell shall have a clear polycarbonate lens / aluminum body.

6. Individual LED modules shall be wired so that a catastrophic failure of one LED module will result in a loss of the damaged LED module only and shall not result in a failure of the entire lamp.

7. Heat sinking shall be provided to maintain L70 life and lumen output. The ambient temperature and the temperature at the p-n junction of the photodiode shall be controlled by use of an appropriately sized heat sink.

8. Quality of Visual Environment and Glare

a. The LED lamp light distribution shall be designed such that it does not provide disabling glare to drivers or flicker effect.

b. Polar plots given in photometric reports depict the pattern of light emitted through the ninety degree (90°) (horizontal) plane and zero degree (0°)

(vertical) plane. In general, LED lamp must provide a reduction in luminous intensity in the seventy degree (70°) to ninety degree (90°) vertical angles to avoid glare.

9. The LED lamps shall be rated for 277-Volt, 1 phase operation.
10. The LED lamp shall be designed to keep the wattage constant for the L80 life of the lamp while allowing the light levels to diminish to no less than the requirements of 1.03. LED lamps that vary wattage over time, while maintaining light levels, are not acceptable.
11. Total LED lamp weight shall not exceed three (3) pounds.
12. Total harmonic distortion induced into an AC power line by a LED lamp shall not exceed twenty (20) percent.

D. POWER SUPPLY

1. Power supply must be integral to the LED lamp.
2. Operating life of power supply shall be a minimum of fifty thousand (50,000) hours.
3. Power supply shall be designed to operate from a supply voltage 277 Volts AC ± 10 percent, 60Hz. Power supplies rated 90V – 277V are acceptable.
4. *The power supply shall provide a power factor of 0.90 or greater.*

2.03 ELECTROMAGNETIC COMPATIBILITY & ELECTROMAGNETIC INTERFERENCE (EMC / EMI) TO BE TESTED BY THE PORT AUTHORITY:

A. The lamps will be subject to the following existing environment: close proximity of the existing radiating antenna cables to the existing lighting fixtures. The radiating antenna cables are located at a distance approximately one-foot to one-inch from the existing lighting fixtures. These conditions are applicable to paragraph 1.01.B.1 (Pre-production Testing) and paragraph 1.01.B.2 (Purchase of Remaining LED Lamps).

Standard equipment specifications and associated parameters for radio and wireless system performance reliability are applicable.

B. EMC/EMI *requirements for the permanent installation* as applicable to paragraph 1.01.B.2:

1. The LED lamp assembly, including electrical and electronics components, shall not present harmful interference to the existing radio systems operating in the AM, FM, Personal Communications Service (PCS), Advance Wireless Service (AWS), VHF, UHF, and 800 MHz radio frequencies bands.
2. The LED lamp assembly, including electrical and electronics components, shall not experience any degradation in performance due to operation in the existing environment.

C. The test criteria per paragraph 1.01.B.1 (Pre-production Testing) will apply as binding qualifiers and requirements for 1.01.B.2 (Purchase of Remaining LED Lamps).

2.04 LABELING

A. Lamps and lamp packaging shall be labeled with the date of manufacture (month, day, and year) along with a lot number.

PART III – EXECUTION

3.01 INSTALLATION

A. Installation of the LED lamps will be done by the Port Authority. Existing fluorescent lamp ballasts and starters will be removed by the Port Authority prior to installing LED lamps into existing fixtures.

3.02 PRE-PRODUCTION TESTING

A. The Port Authority will purchase twenty-four (24) LED lamps (each ninety-six (96)-inches in length) and two (2) LED lamps (each seventy-two (72)-inches in length) from the selected manufacturer for a pre-production evaluation. Upon written request, the manufacturer shall fabricate and supply the lamps to the Port Authority. The pre-production lamps shall be delivered to the Port Authority within forty-five (45) calendar days upon written notification from the Port Authority. All pre-production LED lamps shall be of identical design, components, and assembly.

B. The lamps will be tested by the Port Authority for compliance with IESNA RP-22-05, to confirm the computer modeling.

C. Light level measurement (Luminance): All light level measurements will be performed by the Port Authority based on IESNA LM-71-96.

D. The LED lamp assembly, including electrical and electronics components, will be tested by the Port Authority for the subject of electromagnetic compatibility and electromagnetic interference with the existing tunnel radio systems operating in the AM, FM, VHF, UHF , 800 MHz, PCS, and AWS radio frequencies bands. The test criteria and methods will be based on FCC rules, and the MIL-STD-461F standard, as well as *on any other requirements necessary to ensure LED Lamp compatibility in the tunnel* environment per paragraph 2.03.

E. The testing of the pre-production lamps will be for a minimum of forty-five (45) calendar days to ensure that the lamps:

1. Meet IESNA RP-22-05.
2. Do not interfere with the existing tunnel radio systems.
3. Meet the specifications stated herein.

F. Approval or rejection of the pre-production LED lamps, notwithstanding compliance with the requirements specified herein, and without assigning any reason(s), therefore shall be at the sole discretion of the Port Authority. If the pre-production LED lamps receive Port Authority approval, then the Port Authority may purchase the remaining quantity of lamps requested.

G. If the pre-production LED lamps are rejected (not approved) by the Port Authority due to non-compliance with the requirements specified herein, the bidder, at the bidder's expense, may be given up to forty-five (45) calendar days by the Port Authority, from the date that the bidder was notified of the rejection, to remedy the reason or reasons for the non-compliance. In the event that the bidder fails to remedy the non-compliance within the forty-five (45) days provided, the Port Authority, in its sole discretion, may reject the bidder's Proposal for the purchase of the remaining LED lamps.

3.03 PURCHASE OF REMAINING LED LAMPS

A. Upon written notification from the Port Authority, deliver 100 percent of the balance - quantity of three thousand six hundred and forty seven (3,647) 96-inch and fifty-eight (58) 72-inch lamps no later than twelve (12) weeks. The balance of lamps shall be delivered in their entirety, as one shipment. Partial deliveries of the lamps will not be accepted.

B. All LED lamp design, components and assembly shall be identical to the tested and approved pre-production LED lamps to ensure compliance to the test results.

3.04 PAYMENT TERMS

A. The payment terms for the purchase of the pre-production lamps shall be Net 60 days.

B. The payment terms for the balance of the remaining lamps (if purchased) shall be Net 30 days.

3.05 WARRANTY

A. Provide written warranty on the lamp and lamp components for a period of three years from the date of delivery acceptance. Any lamp defective in manufacture or fails to meet the design and performance requirements within the three (3)-year warranty period shall be replaced without cost or obligation to the Port Authority.

PART IV – PERFORMANCE EVALUATION

4.01 PRICING

A. Since the wattage of the new LED lamps has ongoing impacts on the operating costs of the tunnel, the Port Authority is seeking the most efficient lamp at the best pricing. Accordingly, the bid shall be adjusted to reflect the energy efficiency of the LED lamp. The adjustment shall be applied only to those lamps exceeding 5.00 watts per foot. Lamps exceeding 6.00 watts per foot shall not be accepted. For lamps 5.00 watts or less, the adjustment will equal zero (0). The adjustment is being added to the base bid price for evaluation purposes only. If applicable, please note the total adjustment for lamps that exceed 5.00 watts per foot, up to 6.00 watts per foot based on the following formulas:

a. 60" Lamps: (wattage of lamp) - 5 x 6 x 60 x 8760 x 0.145 x 5 ÷ 1000

b. 72" Lamps: (wattage of lamp) – 5 x 8 x 3671 x 8760 x 0.145 x 5 ÷ 1000

END OF SECTION

DIVISION 16

SECTION 16555C

LIGHT EMITTING DIODE (LED) DIRECT REPLACEMENT LAMP

APPENDIX A

SUBMITTAL REQUIREMENTS

The following shall be submitted within five (5) business days of notification from the Port Authority to determine compliance with the requirements specified in the document entitled "Division 16. Section 16555C. Light Emitting Diode (LED) Direct Replacement Lamp":

A. Assembly Drawings
   1. Provide an illustration showing the basic lamp assemblies, dimensions (including length and diameter), and assembly materials.

B. Catalog cut sheets and specifications:
   1. For the LED showing the following:
      a. Type of LED, Manufacturer and Part Number
   2. For the LED lamps showing the following:
      a. Restriction of Hazardous Substances (RoHS) compliancy
      b. Input Voltage / Amperage
      c. Energy Consumption in Watts
      d. Efficacy in Lumens per Watt
      e. Color Rendering Index (CRI)
      f. Color Temperature
      g. Total Lumens
      h. Total Weight
      i. Operating Life
   3. For the power supply showing the following:
      a. Manufacturer and Part Number
      b. Operating Life
      c. Power Factor
      d. Operating Voltage /Amperage
      e. Total Harmonic Distortion
      f. Wiring Diagram

C. Certified Test Reports

1. Provide the following information prepared by an independent testing laboratory for qualifications for pre-production testing and for permanent installation:

   a. Candela distribution data, presented graphically and numerically in no more than five (5) degree increments (5, 10, 15, etc.). Data developed for up and down quadrants normal, parallel and at 22.5, 45, 167.5 degrees to fixture axis if light output is asymmetric.

   b. Zonal lumens stated numerically in ten (10) degree increments (10, 20, etc.) and LED lamp efficiency.

   c. Luminance table with data presented numerically, showing maximum luminance of the LED lamp at the shielding angles. Readings should be taken both crosswise and lengthwise.

   d. Input Watts.

   e. LED lamp efficiency.

   f. LM-80 Test Report

   g. FCC Part 15 Certificate of Compliance.

D. Computer Modeling

1. In order to demonstrate compliance of the proposed LED replacement lamps to the IESNA RP-22-05 requirements, submit lighting calculation for 100 running feet of tunnel.

   a. Calculation Parameters:

      1) LLF – 0.58 including:

         a) Power Supply Loss;

         b) Tunnel Surface Dirt Depreciation;

         c) LED Lamp Lumen Depreciation

      2) Reflectance's:

         a) Ceiling – 20%;

         b) Walls – 50% Reflectance;

         c) Roadway Classification R4 – smooth texture asphalt.

      3) Existing Tunnel Lighting:

         a) The existing fluorescent fixtures are spanned between existing power node pockets (former recessed light boxes), which are roughly twenty-feet on center, so that two (8) feet fluorescent fixtures are located in between the 20-foot span, with two (2) feet between the lamps.

         b) For fixture locations, tunnel cross-section, and dimensions see Appendix B.

2. All modeling shall be performed in AGi32 version 2.02 or later. No other modeling software shall be accepted.

a. Provide a complete listing of all reflectances used for computer modeling.

b. All assumptions used in the modeling shall be submitted in tabular form as well as in the submitted files. This shall include LED lamp efficiency, lumen deprecation, surface reflectance values (roadway, ceiling, and walls), power supply efficiency, lumen value at design junction temperature and drive current, drive current and forward voltage, etc.

c. All calculations shall be run with an internal summer tunnel temperature of forty-five (45) deg C.

d. Point by points shall be run on the roadway surface and tunnel walls for luminance (cd/sqm) and illuminance (Fc). This shall be performed for each of the following design conditions: Initial installation (less than 500 hours), five (5)-years, and ten (10)-years.

e. The model shall be run in full calculation mode, utilizing the radiosity calculation engine to compute luminance (cd/sqm) for the roadway surface and tunnel walls. Veiling luminance shall also be included.

f. Pseudo-color with scaling shall be provided.

In the event that any of the foregoing is requested and is not furnished within five (5) days thereafter, or within such additional time as the Port Authority, in its sole discretion, may allow, the Port Authority may not be in a position to determine whether the bidder is qualified, whether the bidder understands the requirements of the contract, or whether the bidder is responsive and may, in its sole discretion, reject the bidder's bid.

END OF APPENDIX A

DIVISION 16

SECTION 16555C

LIGHT EMITTING DIODE (LED) DIRECT REPLACEMENT LAMP

APPENDIX A

SUBMITTAL REQUIREMENTS

The following shall be submitted within five (5) business days of notification from the Port Authority to determine compliance with the requirements specified in the document entitled "Division 16. Section 16555C. Light Emitting Diode (LED) Direct Replacement Lamp":

A. Assembly Drawings
   1. Provide an illustration showing the basic lamp assemblies, dimensions (including length and diameter), and assembly materials.

B. Catalog cut sheets and specifications:
   1. For the LED showing the following:
      a. Type of LED, Manufacturer and Part Number
   2. For the LED lamps showing the following:
      a. Restriction of Hazardous Substances (RoHS) compliancy
      b. Input Voltage / Amperage
      c. Energy Consumption in Watts
      d. Efficacy in Lumens per Watt
      e. Color Rendering Index (CRI)
      f. Color Temperature
      g. Total Lumens
      h. Total Weight
      i. Operating Life
   3. For the power supply showing the following:
      a. Manufacturer and Part Number
      b. Operating Life
      c. Power Factor
      d. Operating Voltage /Amperage
      e. Total Harmonic Distortion
      f. Wiring Diagram

C. Certified Test Reports

1. Provide the following information prepared by an independent testing laboratory for qualifications for pre-production testing and for permanent installation:

   a. Candela distribution data, presented graphically and numerically in no more than five (5) degree increments (5, 10, 15, etc.). Data developed for up and down quadrants normal, parallel and at 22.5, 45, 167.5 degrees to fixture axis if light output is asymmetric.

   b. Zonal lumens stated numerically in ten (10) degree increments (10, 20, etc.) and LED lamp efficiency.

   c. Luminance table with data presented numerically, showing maximum luminance of the LED lamp at the shielding angles. Readings should be taken both crosswise and lengthwise.

   d. Input Watts.

   e. LED lamp efficiency.

   f. LM-80 Test Report

   g. FCC Part 15 Certificate of Compliance.

D. Computer Modeling

1. In order to demonstrate compliance of the proposed LED replacement lamps to the IESNA RP-22-05 requirements, submit lighting calculation for 100 running feet of tunnel.

   a. Calculation Parameters:

      1) LLF – 0.58 including:

         a) Power Supply Loss;

         b) Tunnel Surface Dirt Depreciation;

         c) LED Lamp Lumen Depreciation

      2) Reflectance's:

         a) Ceiling – 20%;

         b) Walls – 50% Reflectance;

         c) Roadway Classification R4 – smooth texture asphalt.

      3) Existing Tunnel Lighting:

         a) The existing fluorescent fixtures are spanned between existing power node pockets (former recessed light boxes), which are roughly twenty-feet on center, so that two (8) feet fluorescent fixtures are located in between the 20-foot span, with two (2) feet between the lamps.

         b) For fixture locations, tunnel cross-section, and dimensions see Appendix B.

2. All modeling shall be performed in AGi32 version 2.02 or later. No other modeling software shall be accepted.

a. Provide a complete listing of all reflectances used for computer modeling.

b. All assumptions used in the modeling shall be submitted in tabular form as well as in the submitted files. This shall include LED lamp efficiency, lumen deprecation, surface reflectance values (roadway, ceiling, and walls), power supply efficiency, lumen value at design junction temperature and drive current, drive current and forward voltage, etc.

c. All calculations shall be run with an internal summer tunnel temperature of forty-five (45) deg C.

d. Point by points shall be run on the roadway surface and tunnel walls for luminance (cd/sqm) and illuminance (Fc). This shall be performed for each of the following design conditions: Initial installation (less than 500 hours), five (5)-years, and ten (10)-years.

e. The model shall be run in full calculation mode, utilizing the radiosity calculation engine to compute luminance (cd/sqm) for the roadway surface and tunnel walls. Veiling luminance shall also be included.

f. Pseudo-color with scaling shall be provided.

In the event that any of the foregoing is requested and is not furnished within five (5) days thereafter, or within such additional time as the Port Authority, in its sole discretion, may allow, the Port Authority may not be in a position to determine whether the bidder is qualified, whether the bidder understands the requirements of the contract, or whether the bidder is responsive and may, in its sole discretion, reject the bidder's bid.

END OF APPENDIX A

DIVISION 16
SECTION 16555C
LIGHT EMITTING DIODE (LED) DIRECT REPLACEMENT LAMP
APPENDIX C

DETAILS OF EXISTING HOLLAND TUNNEL

FLUORESCENT LIGHT FIXTURES

Assembly "A" - Lamp Carriers

Assembly "A" is the combination of eight (8) feet or six (6) feet long lamp and the carrier type A8 or A6 respectively. The maximum length for an eight (8) feet long lamp including Carrier type A8 is approximately 120 inches and for six (6) feet long lamp including Carrier type A6 is approximately 90 inches. See Figure 3.42.

A part list per lamp assembly is listed below:

No.	Qty.	Description	Material	Finish
1	1	Boot	#40 Durometer Neoprene	Black
2	1	Spinning	#.032 GA Aluminum	Natural
3	1	Carrier	Clean Glass	---
4	1	Ext. Channel	Aluminum	Natural
5	1	Low Voltage Contact	#.032 GA Aluminum	Silver Plated Contact Surface
6	1	Lamp	F72/T12 CW or F96/T12 CW	CW
7	1	High Voltage Socket	Kulka #572	Screw Contact
8	1	Ferrule	Bronze	Chrome Plated
9	1	Gasket	1-9/16 ID, 2-5/16 OD Neoprene	Blk Cemented to Ferrule

10	1	Insulator	Havalex	Natural
11	1	End Cap	Bronze	Chrome Plated
12	1	Washer Gasket	3-1/8" OD X 1/16" Thk. Neoprene	40 Dorometer Black
13	1	Washer Gasket	2-7/8" OD x 1/8" Thk. Neoprene	60 Dorometer Black
14	1	Gasket Ring Clamp	Bronze	Chrome Plated
15	4	Fl. Hd. Ms. 8.32 x 3/8"	Phosphor Bronze	Chrome Plated
16	1	Low Voltage Sleeve	Brass	Silver Plated Brush Contact Surface
17	1	High Voltage Pin	Brass	Silver Plated Brush Contact Surface
18	2	Part #15 Screw	SS 8-32 x 1/4"	Natural

Assembly "B" - Spring Carrier

Assembly "B" is the combination of spring and the stainless steel tube. One side of the steel tube is welded to a 1/8" thick steel plate with a 1/4" center hole. The spring is made of stainless steel and is bolted with 1-1/4" bolt in the welded plate side. The spring is A.I.S.I. type 302, stress relieved at 550°F for 45 minutes, 11" long at rest, spring rate 2-1/2 lbs. per inch compression, deflection 7-3/4". The tube is stainless steel, cold drawn, O.D. - 3.5", I.D. - 3.37", lbs/in. ft. - 2.385. See Figure 3.43.

Assembly "C" - Socket Carrier

Assembly "C" is the combination of socket and the stainless tube. See Figure 3.44.

A part list of socket assembly is listed below:

No.	Qty.	Description	Material	Finish
1		Wire	Spec.	Spec.
2	1	Contact Block	Diallyl Phthalate	Brown
3	2	Brush	Beryllium Copper	Silver Plated
4	4	Round Head Machine Screw	#6-32 x 1/4" Brass	Cadmium
5	1	Round Head Machine Screw	#6-32 x 5/8" Brass	Cadmium
6	2	Hex. Nut	#6-32 Brass	Cadmium
7	1	Lock Washer	#6 Brass	Cadmium
8	3	Flat Head M/C Screw	10-22 x 1/4 St'l Steel	Passivated
9	3	Connector	See Spec.	---
10	1	High Voltage Contact	Beryllium Copper	Silver Plated

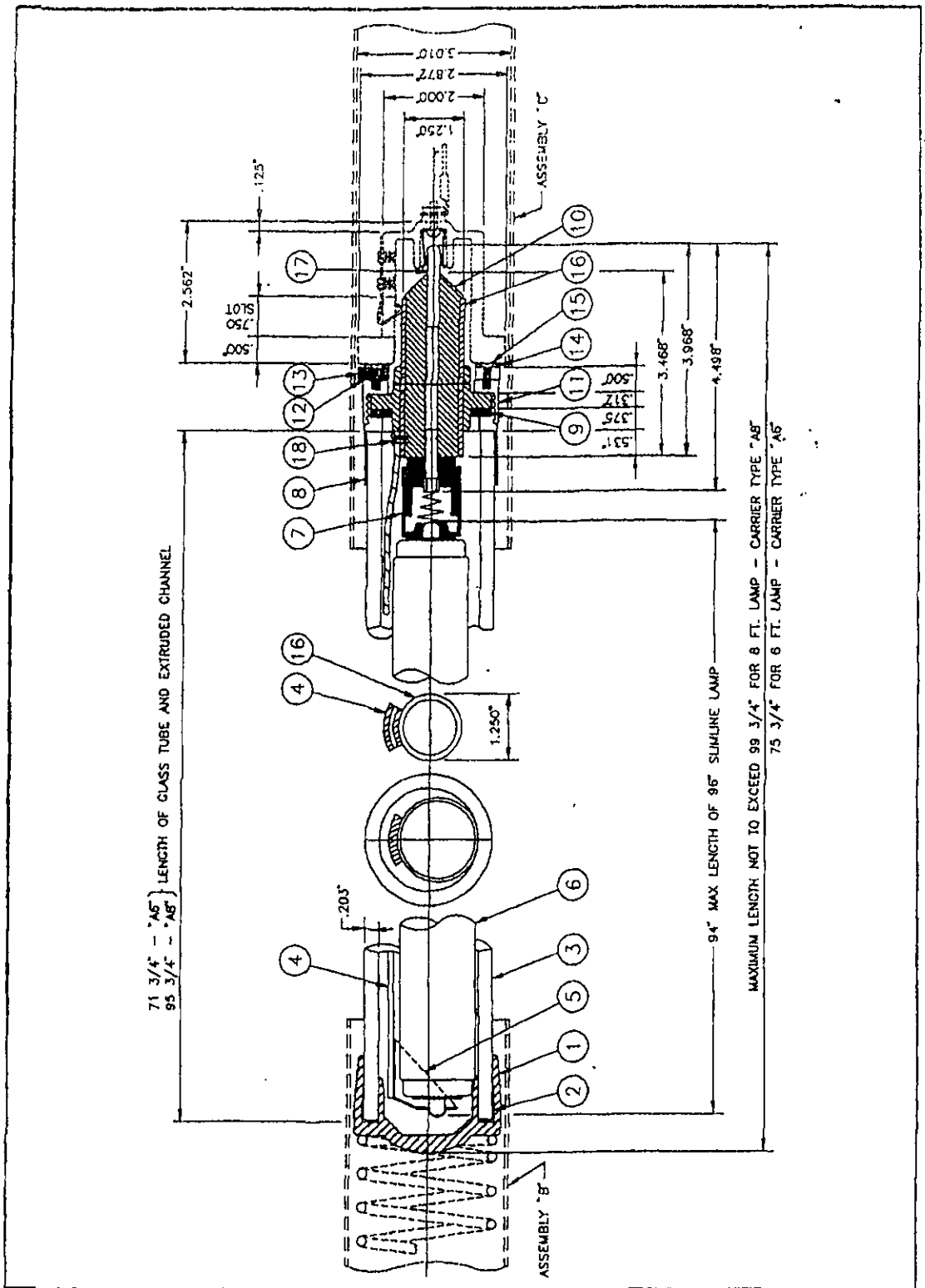

Figure 3.42 Fluorescent Fixture – Assembly "A" Details

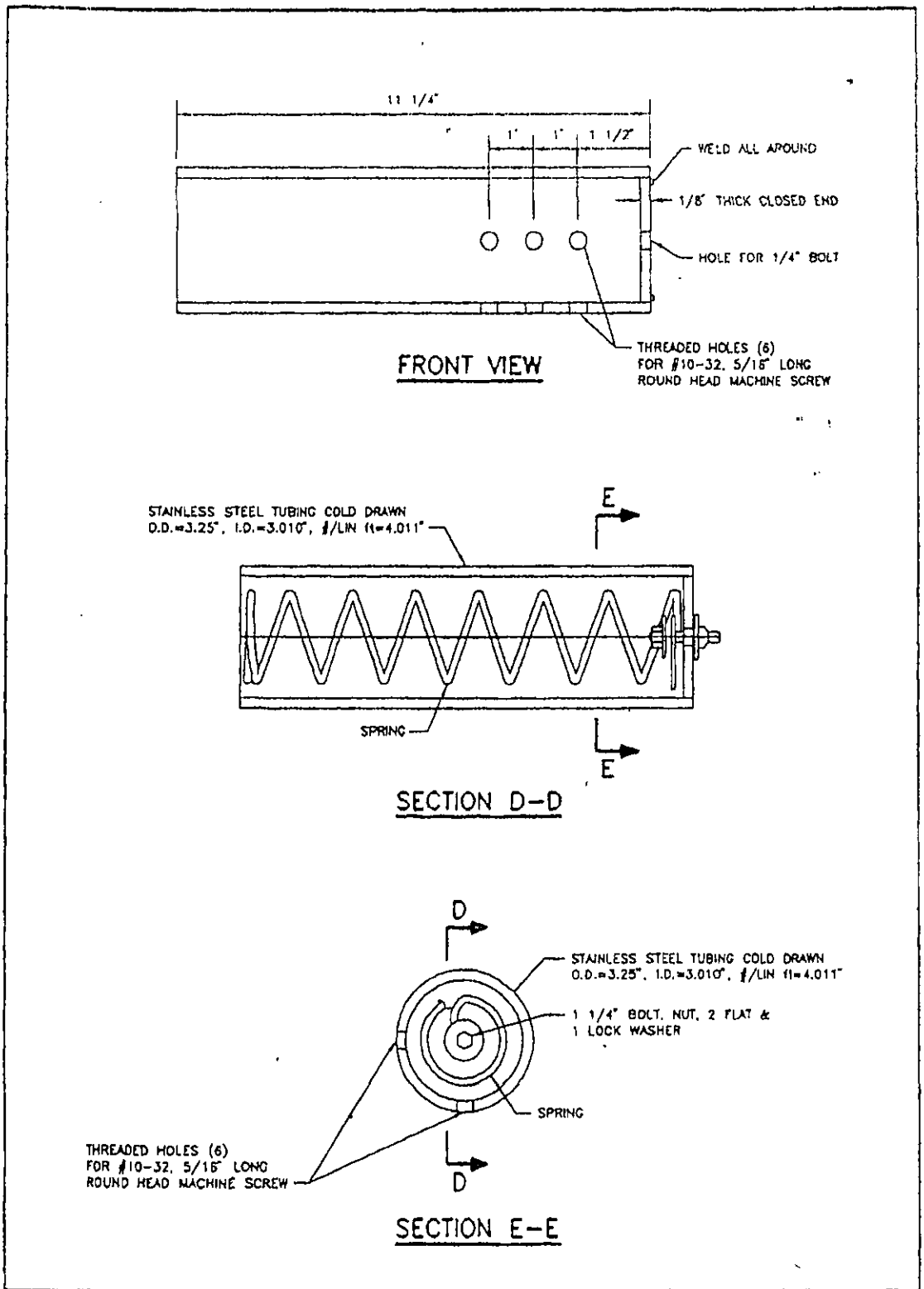

Figure 3.43 Fluorescent Fixture – Assembly "B" Details

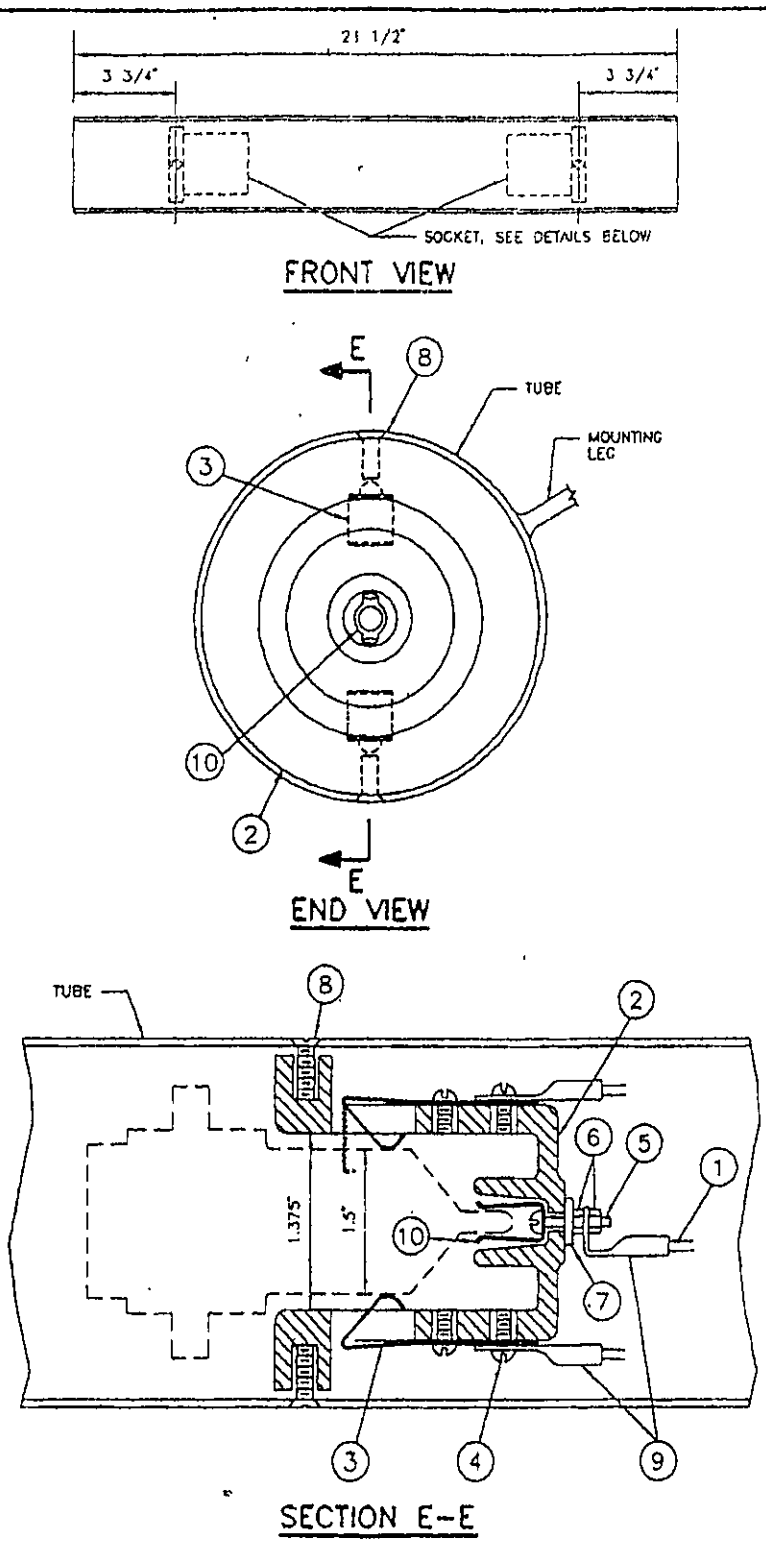

Figure 3.44 Fluorescent Fixture – Assembly "C" Details

16555C-C6

DIVISION 16
SECTION 16555C
LIGHT EMITTING DIODE (LED) DIRECT REPLACEMENT LAMP
APPENDIX B

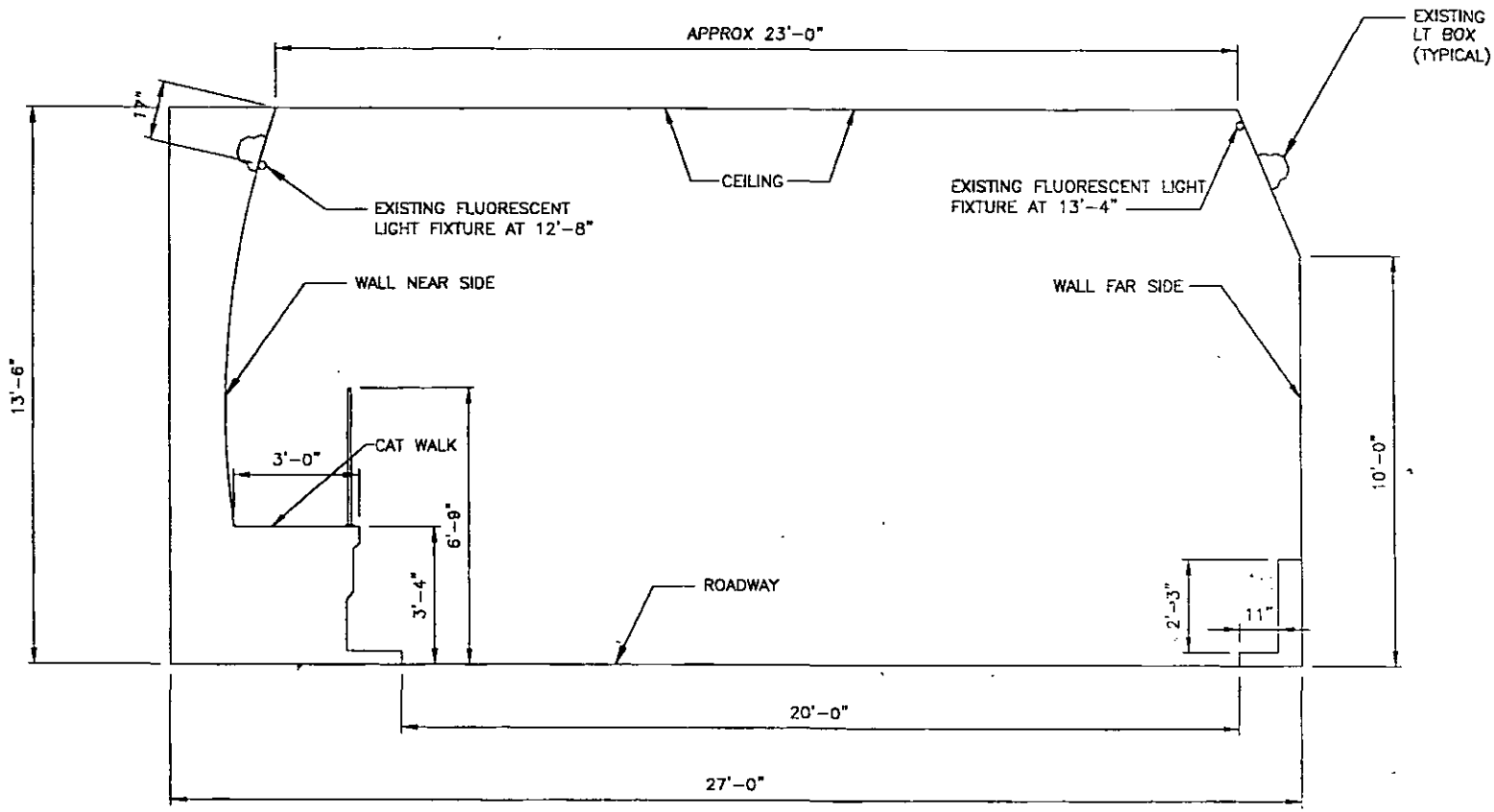

TUNNEL SECTION

NOTE: ALL DIMENSIONS ARE APPROXIMATE

THE PORT AUTHORITY OF NY & NJ	HOLLAND TUNNEL	Discipline: ELECTRICAL	06-11-2010 Date	
A.FRENKEL D.LEAHY A.SPIVAK (Designed by / Drawn by / Checked by)	LED LIGHTING UPGRADE	DIVISION 16 SECTION 16555C APPENDIX B TUNNEL SECTION	HT-224.050 Contract Number; 06487000 PID Number	Drawing Number 8KE-1

10/20/10

PHOTOGRAPHS OF EXISTING HOLLAND TUNNEL

FLUORESCENT LIGHT FIXTURES

PHOTO #1 – FLUORESCENT LIGHT FIXTURE

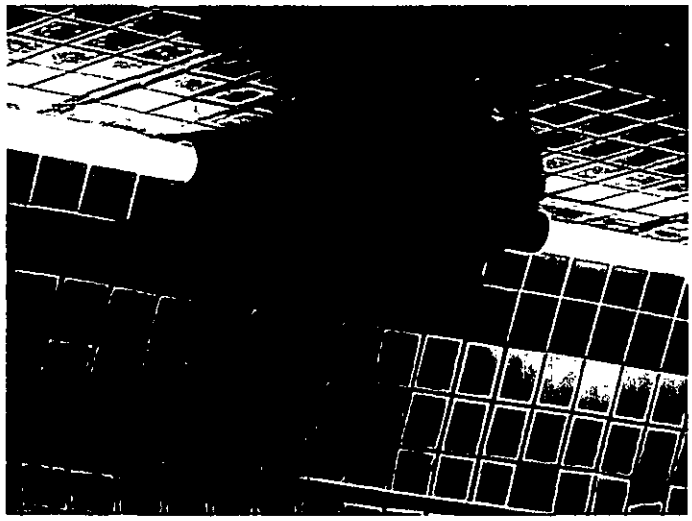

PHOTO #2 – CLOSER VIEW OF FLUORESCENT LIGHT FIXTURE SHOWING LAMP CARRIER

THE PORT AUTHORITY OF NY & NJ
1 Madison Avenue, 7th Floor, New York NY 10010

Date 10/05/2010

REQUEST FOR QUOTATION

	Collective# / RFQ Number / Bid Due Date 0000022694 / 1 / 11/01/2010 Bids must be received no later than 11:00 AM on the above Bid Due Date.
Contact person/Telephone Shanta Nelson/212-435-3980	**Deliver Goods/Services To:** Holland Tunnel *13th Street & Provost Street* Jersey City NJ 07302

Quantity	Description	Unit Price	Total
	LED Lamps Delivery To: Holland Tunnel 13th & Provost Street Jersey City, New Jersey 07302 Attn: Stephen Olmo Note: Please contact Stephen Olmo 24 hours prior to delivery for instructions. Attachments: "DIVISION 16 SECTION 16555C LIGHT EMITTING DIODE (LED) DIRECT REPLACEMENT LAMP", Appendix B and "APPENDIX A SUBMITTAL REQUIREMENTS" dated 10/4/10 to be made part of this contract. Note: Submittal requirements listed in "APPENDIX A SUBMITTAL REQUIREMENTS" shall be submitted within five(5) business days of notification from the Port Authority to determine compliance with the requirements specified in the document entitled. "DIVISION 16. SECTION 16555C. LIGHT EMITTING DIODE (LED) DIRECT REPLACEMENT LAMP" A price preference of 10 % is available for NY/NJ Minority and Women Business Enterprises (M/WBE) or 5% for NY/NJ Small Business Enterprises (SBE) certified by the Port Authority (PA) by the day before bid opening for awards not exceeding $1,000,000. My firm was certified as a		
	PLEASE QUOTE FULLY DELIVERED PRICES — **PAYMENT TERMS**	**Total Delivered Price**	

This Quotation is subject to the terms and conditions set forth on the back page hereof. Bidder is advised to read these before signing.

We have read the instructions and, if favored with an order, we agree to furnish the items enumerated herein at the prices and under the conditions indicated.

Signed _____
Firm Name _____
Telephone number _____ Date _____
Fax Number _____
Federal Taxpayer ID _____

Bidder Must Sign In Two Places

NOTICE TO BIDDERS: Unless the following term of assurance that the above offer is irrevocable is signed, the offer submitted herein shall not be deemed to be complete.

The foregoing offer shall be irrevocable for 90 days after the date on which the Port Authority of New York and New Jersey opens this proposal.

Signed _____ Date _____
Firm Name _____

THE PORT AUTHORITY OF NY & NJ
1 Madison Avenue, 7th Floor, New York NY 10010

REQUEST FOR QUOTATION

RFQ Number / Bid Due Date
11/01/2010

Quantity	Description	Unit Price	Total
	_____on_____.		
	****QUOTE ONLY FULLY DELIVERED PRICES*******		
	PLEASE QUOTE FULLY DELIVERED PRICES — PAYMENT TERMS	Total Delivered Price	

This Quotation is subject to the terms and conditions set forth on the back page hereof. Bidder is advised to read these before signing.

We have read the instructions and, if favored with an order, we agree to furnish the items enumerated herein at the prices and under the conditions indicated.

Signed _____
Firm Name _____
*Telephone number*_____*Date*_____
Fax Number_____
Federal Taxpayer ID _____

Bidder Must Sign In Two Places

NOTICE TO BIDDERS: Unless the following term of assurance that the above offer is irrevocable is signed, the offer submitted herein shall not be deemed to be complete.

The foregoing offer shall be irrevocable for 90 days after the date on which the Port Authority of New York and New Jersey opens *this proposal.*

Signed_____Date_____
Firm Name_____

THE PORT AUTHORITY OF NY & NJ
1 Madison Avenue, 7th Floor, New York NY 10010

Date 10/05/2010

REQUEST FOR QUOTATION

RFQ Number / Bid Due Date
/ 11/01/2010

Quantity	Description	Unit Price	Total
	This is a Formal Bid Invitation Mail Sealed Bids to: The Port Authority of NY & NJ Attn: Bid Custodian Procurement Department One Madison Avenue, 7th Floor New York, N.Y. 10010 by the date and time listed above, where it will be publicly opened and read. Bids are only accepted Monday through Friday, excluding Port Authority holidays,between the hours of 8 A.M. & 5 P.M., via regular mail,express delivery service or hand delivery. If you do not use or have an envelope provided, you must clearly mark the outside envelope/package with 'BID ENCLOSED' and show the company name, address, as well as Bid number and Due date as stated on this bid document. A valid photo id is required to gain access into the building, to attend the bid opening or hand deliver a bid.		
	LED LAMPS		
	PLEASE QUOTE FULLY DELIVERED PRICES — PAYMENT TERMS	**Total Delivered Price**	

This Quotation is subject to the terms and conditions set forth on the back page hereof. Bidder is advised to read these before signing.

We have read the instructions and, if favored with an order, we agree to furnish the items enumerated herein at the prices and under the conditions indicated.

Signed _____
Firm Name _____
Telephone number _____ Date _____
Fax Number _____
Federal Taxpayer ID _____

Bidder Must Sign In Two Places

NOTICE TO BIDDERS: Unless the following term of assurance that the above offer is irrevocable is signed, the offer submitted herein shall not be deemed to be complete.

The foregoing offer shall be irrevocable for 90 days after the date on which the Port Authority of New York and New Jersey opens this proposal.

Signed _____ Date _____
Firm Name _____

THE PORT AUTHORITY OF NY & NJ
1 Madison Avenue, 7th Floor, New York NY 10010

REQUEST FOR QUOTATION

RFQ Number / Bid Due Date
/ 11/01/2010

Quantity	Description	Unit Price	Total
	Furnish and deliver light emitting diode (LED) lamp to replace existing 96-inch (GE Model 15358, F96/T12 75W, single-pin base) and 72-inch (GE Model 13743, F72/T12, 55W, single-pin base) fluorescent tubular lamps used for providing tunnel roadway illumination. The LED lamps will be installed by the Port Authority in existing light fixtures using the existing sockets and will be enclosed inside gasketed tempered glass tubes. The retrofitted lighting system shall meet the current Illuminating Engineering Society of North America RP-22-05 Recommended Practices for Tunnel Lighting. The procurement will be in two parts: 1. PRE-PRODUCTION TESTING: The Port Authority will purchase twenty-four (24) LED lamps (each ninety-six (96)-inches in length) and two (2) LED lamps (each seventy-two (72)-inches in length) from the selected manufacturer for a pre-production evaluation. The pre-production lamps shall be delivered to the Port Authority within forty-five (45) calendar days upon written notification from the Port Authority. Payment shall be net sixty (60) days. All pre-production LED lamps shall be of identical design, components, and assembly. 2. PURCHASE OF REMAINING LED LAMPS: Contingent upon verification, testing, and at the sole discretion of the Authority, the balance - quantity of three thousand six hundred and forty seven (3,647) 96-inch and fifty-eight (58) 72-inch		
	PLEASE QUOTE FULLY DELIVERED PRICES — PAYMENT TERMS	Total Delivered Price	

This Quotation is subject to the terms and conditions set forth on the back page hereof. Bidder is advised to read these before signing.

We have read the instructions and, if favored with an order, we agree to furnish the items enumerated herein at the prices and under the conditions indicated.

Signed _____
Firm Name _____
Telephone number_____ Date_____
Fax Number_____
Federal Taxpayer ID _____

Bidder Must Sign In Two Places

NOTICE TO BIDDERS: Unless the following term of assurance that the above offer is irrevocable is signed, the offer submitted herein shall not be deemed to be complete.

The foregoing offer shall be irrevocable for 90 days after the date on which the Port Authority of New York and New Jersey opens this proposal.

Signed_____ Date_____
Firm Name_____

THE PORT AUTHORITY OF NY & NJ
1 Madison Avenue, 7th Floor, New York NY 10010

Date 10/05/2010

REQUEST FOR QUOTATION

RFQ Number / Bid Due Date
/ 11/01/2010

Quantity	Description	Unit Price	Total
	lamps will be purchased. All specification requirements and test criteria shall be binding to the procurement of the lamps for permanent installation. Payment shall be net thirty (30) days. Pricing: (80) 72" LED lamps x $_____ = $_____ (3,671) 96" LED Lamps x $_____ = $_____ Grand Total $_____		
1.000	**The item covers the following services:** LED LAMPS		
	PLEASE QUOTE FULLY DELIVERED PRICES	**PAYMENT TERMS**	**Total Delivered Price**

This Quotation is subject to the terms and conditions set forth on the back page hereof. Bidder is advised to read these before signing.

We have read the instructions and, if favored with an order, we agree to furnish the items enumerated herein at the prices and under the conditions indicated.

Signed _____
Firm Name _____
Telephone number_____Date_____
Fax Number_____
Federal Taxpayer ID _____

Bidder Must Sign In Two Places

NOTICE TO BIDDERS: Unless the following term of assurance that the above offer is irrevocable is signed, the offer submitted herein shall not be deemed to be complete.

The foregoing offer shall be irrevocable for 90 days after the date on which the Port Authority of New York and New Jersey opens this proposal.

Signed_____Date_____
Firm Name_____

PA260/9-03

TERMS AND CONDITIONS

1. The Port Authority (PA) reserves the right to request information relating to seller's responsiblity, experience and capability to perform the work.
2. Unless otherwise provided, complete shipment of all items must be in one delivery FOB delivery point. Payment will not be made on partial deliveries unless authorized in advance by the party to be charged and the discount, if any, will be taken on the total order.
3. PA payment terms are net 30 days. Cash discounts for prompt payment of invoices may be taken but will not be considered in determining award, except in the case of tie bids.
4. Separate unit and total FOB delivered prices must be shown.
5. Sales to the PA and to PATH are currently exempt from New York and New Jersey State and local taxes and generally from federal taxation. The seller certifies that there are no federal, state, municipal or any other taxes included in the prices shown hereon.
6. The PA shall have the absolute right to reject any or all proposals or to accept any proposal in whole or part and to waive defects in proposals.
7. Unless the phrase "no substitute" is indicated, bidder may offer alternate manufacturer / brands, which shall be subject to Port Authority approval. Please indicate details of product being offered with bid.
8. Acceptance of seller's offer will be only by Purchase Order Form signed by the PA. No change shall be made in the agreement except in writing.
9. If the seller fails to perform in accordance with the terms of this purchase order, the PA may obtain the goods or services from another contractor and charge the seller the difference in price, if any, a reletting cost of $100, plus any other damages to the PA.
10. Upon request, sellers are encouraged to extend the terms and conditions of any terms agreement with the PA to other government and quasi-government entities by separate agreement.
11. By signing this quotation or bid, the seller certifies to all statements on Form PA 3764 regarding non-collusive bidding; compliance with the PA Code of Ethics; and the existence of investigations, indictments, convictions, suspensions, terminations, debarments and other stated occurrences to assist the PA in determining whether there are integrity issues which would prevent award of the contract to the seller. The PA has adopted a policy set forth in full on PA 3764, that it will honor a determination by an agency of the State of New York or New Jersey that a bidder is not eligible to bid on or be awarded public contracts because the bidder has been determined to have engaged in illegal or dishonest conduct or to have violated prevailing wage legislation. The Terms and Conditions of PA 3764 apply to this order. A copy can be obtained by calling (212) 435-3902 or at http://www.panynj.gov/pdf/PA3764.pdf.
12. The vendor may subcontract the services or use a supplier for the furnishing of materials required hereunder to such persons or entities as the Manager, Purchasing Services may from time to time expressly approve in writing. All further subcontracting shall also be subject to such approval.
13. The successful bidder (vendor) shall not issue nor permit to be issued any press release, advertisement, or literature of any kind, which refers to the Port Authority or that goods will be, are being or have been provided to it and/or that services will be, are being or have been performed for it in connection with this Agreement, unless the vendor first obtains the written approval of the Port Authority. Such approval may be withheld if for any reason the Port Authority believes that the publication of such information would be harmful to the public interest or is in any way undesirable.

DIVISION 16

SECTION 16555C

LIGHT EMITTING DIODE (LED) DIRECT REPLACEMENT LAMP

PART I – GENERAL

1.01 SUMMARY

A. The specification describes the requirements for a light emitting diode (LED) lamp to replace existing 96-inch (GE Model 15358, F96/T12 75W, single-pin base) and 72-inch (GE Model 13743, F72/T12, 55W, single-pin base) fluorescent tubular lamps used for providing tunnel roadway illumination. The LED lamps will be installed by the Port Authority in existing light fixtures using the existing sockets and will be enclosed inside gasketed tempered glass tubes. The retrofitted lighting system shall meet the current Illuminating Engineering Society of North America RP-22-05 Recommended Practices for Tunnel Lighting.

A. The procurement will be in two parts:

1. PRE-PRODUCTION TESTING: The Port Authority shall purchase twenty-four (24) 96" LED lamps and two (2) 72" lamps. Lamps will be purchased for the purpose of testing and verification that all requirements of the specifications are met. Additional testing will be performed by the Authority to verify electromagnetic compatibility and electromagnetic interference (EMC/EMI) with existing radio systems operating inside the tunnel.

2. PURCHASE OF REMAINING LED LAMPS: Contingent upon verification, testing, and at the sole discretion of the Authority, the balance - quantity of three thousand six hundred and forty seven (3,647) 96-inch and fifty-eight (58) 72-inch lamps will be purchased. All specification requirements and test criteria shall be binding to the procurement of the lamps for permanent installation.

1.02 REFERENCES

A. The LED lamp described in this specification shall meet the requirements of the following standards, codes, and regulatory agencies:

1. American National Standards Institute (ANSI)

   a. ANSI C 2 - National Electrical Safety Code

   b. ANSI C78.377- 2008 - Specifications for the Chromaticity of Solid State Lighting Products

   c. ANSI C82.SSL1- Power Supply

   d. ANSI C82.77-2002 - Harmonic Emission Limits – Related Power Quality Requirements for Lighting

2. American Association of State and Highway Transportation Officials (AASHTO)

3. American Society for Testing and Materials (ASTM)

4. Department of Defense

a. MIL-STD-461F – Requirements for the Control of Electromagnetic Interference and Emissions Susceptibility (This requirement is applicable to 1.01.B.1, the procurement for permanent installation.)

5. Department of Energy (DOE)
   a. LED Luminaire Lifetime: Recommendations for Testing and Reporting
6. Federal Communications Commission (FCC)
   a. 47 CFR Part 15 - Radio Frequency Devices Underwriters Laboratories
   b. 47 CFR Part 18 - Industrial, Scientific and Medical Equipment
7. Federal Trade Commission (FTC)
   a. The Energy Policy Act of 1992
   b. Lamp Efficiency Labeling and Standards
8. Illuminating Engineering Society of North America (IESNA)
   a. TM-16-05 - Technical Memorandum on Light Emitting Diode (LED) Sources and Systems
   b. RP-22-05 - Recommended Practices for Tunnel Lighting
   c. LM-71-96 - Approved Guide for Photometric Measurement of Tunnel Lighting Installations
   d. LM-79-08 - Approved Method for the Electrical and Photometric Measurements of Solid-State Lighting Products
   e. LM-80-08 - Lumen Maintenance
9. International Electrotechnical Commission (IEC)
   a. IEC 60529 - Degrees of protection provided by enclosures (IP Code)
10. National Fire Protection Association (NFPA)
    a. NFPA 101- Life Safety Code
    b. NFPA 70-2005 - National Electrical Code International Building Code, New Jersey Edition (NJ IBC)
11. New York City Electrical Code (NYCEC)
12. The International Code Council (ICC) Unified Building Code
13. Underwriters Laboratories (UL)
    a. UL 1598 - Retrofit Luminaire Conversions
    b. UL 8750 - Outline of Investigation for Light-Emitting Diode (LED) Light Sources for Use in Lighting Products

1.03 DESIGN AND PERFORMANCE REQUIREMENTS

A. The LED lamp shall be designed to meet all requirements of IESNA RP-22-05, including but not limited to: veiling luminance, flicker effect, luminance values, and uniformity. The LED lamp shall conform to all references listed in paragraph 1.02. Maintained luminance of the interior zone shall be a minimum of five-candela per square meter (5 cd/sqm) at the road surface, with a uniformity ratio below 3:1. Average

pavement luminance of the interior zone shall meet IESNA RP-22-05 for Heavy traffic at 35 mph. The tunnel wall up to ten (10) feet above the roadway shall have at least an average luminance of one-third of the average roadway level as defined in the IESNA RP-22-05 standard.

B. The LED lamp shall be designed for continuous operation under the following environmental conditions:

1. Temperature: Minus forty (40) degrees centigrade to plus forty-five (45) degrees centigrade.
2. Humidity: Ninety-five (95) percent relative humidity.

C. Lamp and lamp components shall be Restriction of Hazardous Substances (RoHS) compliant.

D. Lamp power consumption shall not exceed 5.0 watts per foot. (Measured at a forty (40) degree centigrade ambient temperature and two hundred and seventy-seven (277) Volts).

E. Lumen depreciation cannot exceed 20% over a five (5)-year period based on running the lamp 100% of the time.

1.04 QUALITY ASSURANCE

A. Entities manufacturing lamps and lamp components specified herein shall have a minimum of three years manufacturing experience in LED lighting production.

B. Lamps and lamp components for which there is a nationally recognized standard shall be safety tested by a Nationally Recognized Testing laboratory, such as Underwriters Laboratories Inc. (UL), MET Laboratories, or approved equal, and bear conformance labeling by the third party inspection authority certifying that the lamp or lamp component is listed as suitable for the purposes specified.

1.05 DELIVERY, STORAGE, AND HANDLING

A. Deliver materials in unopened protective packaging. Handle materials in a manner to prevent damage. Any lamps damaged during shipping shall be replaced at no cost to the Port Authority.

1.06 SUBMITTALS

A. See Appendix A for submittal requirements.

PART II – PRODUCTS

2.01 MANUFACTURERS

A. Subject to compliance with the requirements of this Section, diodes shall be as made by one of the below manufacturers or an approved equal as determined by the Port Authority of NY & NJ (PA):

1. AVAGO
2. CREE
3. LUMILED

4. NICHIA
5. OSRAM/SYLVANIA

B. All diodes shall be from one manufacturer; the use of diodes from multiple manufacturers will not be accepted.

2.02 MATERIALS

A. Any item, accessory or component not identified in the specifications but necessary or required for the proper fabrication, installation or operation in carrying out the intent of these specifications, shall be furnished as though they were specifically delineated, described, or mentioned.

B. Light Emitting Diodes (LEDs):

1. All LED's shall be "InGaN" Indium Gallium Nitride technology and L80 life rated for 50,000 hours @ 45°C ambient.
2. All supplied LEDs shall fall within a two-step MacAdam Ellipse, as per IESNA LM-79 & LM-80.
3. All LED's shall have a Color Rendering Index (CRI) of 70+.
4. All LED's shall have a Color Temperature of 6500°K or less. Lamps consisting of diodes with major varying degrees of color temperature will not be accepted.

C. LED Lamp Construction

1. LED lamps shall be ninety-six (96)-inches and seventy-two (72)-inches in length. No other lengths are acceptable.
2. LED lamps shall be T12 or T8 in diameter.
3. LED lamp shall be designed for mounting in existing fluorescent single pin connection.
4. Optical System:
   a. The optical system shall provide adequate light distribution onto roadway and minimize disabling glare.
   b. For optimum light distribution, all light must exit the lamp in a one hundred and twenty degree (120°) cone.
   c. Asymmetric distribution is preferred.
   d. Manufacturer to provide means or marks on LED lamp to facilitate field aiming the lamp in order to comply with the manufacturer's computer modeling.
5. LED lamp shall have an Ingress Protection (IP) rating of fifty-four (54).
6. Lampshell shall have a clear polycarbonate lens / aluminum body.
7. LED lamps shall not have any LED module longer than six inches. Individual LED modules shall be wired so that a catastrophic failure of one LED module will result in a loss of the damaged LED module only and shall not result in a failure of the entire lamp.

8. Heat sinking shall be provided to maintain L80 life and lumen output. The ambient temperature and the temperature at the p-n junction of the photodiode shall be controlled by use of an appropriately sized heat sink.
9. Quality of Visual Environment and Glare
   a. The LED lamp light distribution shall be designed such that it does not provide disabling glare to drivers or flicker effect.
   b. Polar plots given in photometric reports depict the pattern of light emitted through the ninety degree (90°) (horizontal) plane and zero degree (0°) (vertical) plane. In general, LED lamp must provide a reduction in luminous intensity in the seventy degree (70°) to ninety degree (90°) vertical angles to avoid glare.
10. The LED lamps shall be rated for 110-277-volt operation with 1 phase wiring.
11. The LED lamp shall be designed to keep the wattage constant for the L80 life of the lamp while allowing the light levels to diminish to no less than the requirements of 1.03. LED lamps that vary wattage over time, while maintaining light levels, are not acceptable.
12. Total LED lamp weight shall not exceed three (3) pounds.
13. Total harmonic distortion induced into an AC power line by a LED lamp shall not exceed twenty (20) percent.

D. POWER SUPPLY

1. Power supply must be integral to the LED lamp.
2. Operating life of power supply shall be a minimum of fifty thousand (50,000) hours.
3. Power supply shall be designed to operate from a supply voltage ranging from 110 Volts to 277 Volts AC ± 10 percent, 60Hz.
4. The power supply shall provide a power factor of 0.90 or greater.

2.03 ELECTROMAGNETIC COMPATIBILITY & ELECTROMAGNETIC INTERFERENCE (EMC / EMI):

A. The lamps will be subject to the following existing environment: close proximity of the existing radiating antenna cables to the existing lighting fixtures. The radiating antenna cables are located at a distance approximately one-foot to one-inch from the existing lighting fixtures. These conditions are applicable to paragraph 1.01.B.1 (Pre-production Testing) and paragraph 1.01.B.2 (Procurement for Permanent Installation).

   Standard equipment specifications and associated parameters for radio and wireless system performance reliability are applicable.

B. EMC/EMI requirements for the permanent installation as applicable to paragraph 1.01.B.2:

1. The LED lamp assembly, including electrical and electronics components, shall not present harmful interference to the existing radio systems operating in the

AM, FM, Personal Communications Service (PCS), Advance Wireless Service (AWS), VHF, UHF, and 800 MHz radio frequencies bands.

2. The LED lamp assembly, including electrical and electronics components, shall not experience any degradation in performance due to operation in the existing environment.

C. The test criteria per paragraph 1.01.B.1 (Pre-production Testing) will apply as binding qualifiers and requirements for 1.01.B.2 (Procurement for Permanent Installation).

2.04 LABELING

A. Lamps and lamp packaging shall be labeled with the date of manufacture (month, day, and year) along with a lot number.

PART III – EXECUTION

3.01 INSTALLATION

B. Installation of the LED lamps will be done by the Port Authority. Existing fluorescent lamp ballasts and starters will be removed by the Port Authority prior to installing LED lamps into existing fixtures.

3.02 PRE-PRODUCTION TESTING

A. *The Port Authority will purchase twenty-four (24) LED lamps (each ninety-six (96)-*inches in length) and two (2) LED lamps (each seventy-two (72)-inches in length) from the selected manufacturer for a pre-production evaluation. Upon written request, the manufacturer shall fabricate and supply the lamps to the Port Authority. The pre-production lamps shall be delivered to the Port Authority within forty-five (45) calendar days upon written notification from the Port Authority. All pre-production LED lamps shall be of identical design, components, and assembly.

B. The lamps will be tested by the Port Authority for compliance with IESNA RP-22-05, confirm the computer modeling.

C. Light level measurement (Luminance): All light level measurements will be performed by the Port Authority based on IESNA LM-71-96.

D. The LED lamp assembly, including electrical and electronics components, will be tested by the Port Authority for the subject of electromagnetic compatibility and electromagnetic interference with the existing tunnel radio systems operating in the AM, FM, VHF, UHF , 800 MHz, PCS, and AWS radio frequencies bands. The test criteria and methods will be based on FCC rules, and the MIL-STD-461F standard, as well as on any other requirements necessary to ensure LED Lamp compatibility in the tunnel environment per paragraph 2.03.

E. The testing of the pre-production lamps will be for a minimum of forty-five (45) calendar days to ensure that the lamps:

1. Meet IESNA RP-22-05.
2. Do not interfere with the existing tunnel radio system.
3. Meet the specifications stated herein.

F. Approval or rejection of the pre-production LED lamps, notwithstanding compliance with the requirements specified herein, and without assigning any reason(s),

therefore shall be at the sole discretion of the Port Authority. If the pre-production LED lamps receive Port Authority approval, then the Port Authority may purchase the remaining quantity of lamps requested.

G. If the pre-production LED lamps are rejected (not approved) by the Port Authority due to non-compliance with the requirements specified herein, then bidder, at the bidder's expense, may be given up to forty-five (45) calendar days by the Port Authority, from the date that the bidder was notified of the rejection, to remedy the reason(s) for the non-compliance. In the event that the bidder fails to remedy the non-compliance within the forty-five (45) days provided, the Port Authority, in its sole discretion, may reject the bidder's bid for the purchase of the remaining LED lamps; provided, however, that the Port Authority may, in its sole discretion, request of the next lower bidder to submit pre-production lamps consistent with the terms of these specifications.

3.03 PURCHASE OF REMAINING LED LAMPS

A. Upon written notification from the Authority, deliver 100 percent of the balance - quantity of three thousand six hundred and forty seven (3,647) 96-inch and fifty-eight (58) 72-inch lamps no later than twelve (12) weeks. The balance of lamps shall be delivered in their entirety, as one shipment. Partial deliveries of the lamps will not be accepted.

B. All LED lamp design, components and assembly shall be identical to the tested and approved pre-production LED lamps to ensure compliance to the test results.

3.04 PAYMENT TERMS

A. The payment terms for the purchase of the pre-production lamps shall be Net 60 days.

B. The payment terms for the balance of the remaining lamps (if purchased) shall be Net 30 days.

3.05 WARRANTY

A. Provide written warranty on the lamp and lamp components for a period of three years from the date of delivery acceptance. Any lamp defective in manufacture or fails to meet the design and performance requirements within the three (3)-year warranty period shall be replaced without cost or obligation to the Port Authority.

END OF SECTION

DIVISION 16

SECTION 16555C

LIGHT EMITTING DIODE (LED) DIRECT REPLACEMENT LAMP

APPENDIX A

SUBMITTAL REQUIREMENTS

The following shall be submitted within five (5) business days of notification from the Port Authority to determine compliance with the requirements specified in the document entitled "Division 16. Section 16555C. Light Emitting Diode (LED) Direct Replacement Lamp":

A. Assembly Drawings

1. Provide an illustration showing the basic lamp assemblies, dimensions (including length and diameter), and assembly materials.

B. Catalog cut sheets and specifications:

1. For the LED showing the following:
   a. Type of LED, Manufacturer and Part Number
2. For the LED lamps showing the following:
   a. Ingress Protection (IP) Rating
   b. Restriction of Hazardous Substances (RoHS) compliancy
   c. Input Voltage / Amperage
   d. Energy Consumption in Watts
   e. Efficacy in Lumens per Watt
   f. Power Factor
   g. Color Rendering Index (CRI)
   h. Color Temperature
   i. Total Lumens
   j. Harmonic Factor
   k. Total Weight
   l. Operating Life
3. For the power supply showing the following:
   a. Manufacturer and Part Number
   b. Operating Life
   c. Power Factor
   d. Operating Voltage /Amperage
   e. Total Harmonic Distortion

f. Wiring Diagram

C. Certified Test Reports

1. Provide the following information prepared by an independent testing laboratory for qualifications for pre-production testing and for permanent installation:

   a. Candela distribution data, presented graphically and numerically in no more than five (5) degree increments (5, 10, 15, etc.). Data developed for up and down quadrants normal, parallel and at 22.5, 45, 167.5 degrees to fixture axis if light output is asymmetric.

   b. Zonal lumens stated numerically in ten (10) degree increments (10, 20, etc.) and LED lamp efficiency.

   c. Luminance table with data presented numerically, showing maximum luminance of the LED lamp at the shielding angles. Readings should be taken both crosswise and lengthwise.

   d. Input Watts.

   e. LED lamp efficiency.

   f. Provide FCC Part 15 and Part 18 certifications or a certified test report.

D. Computer Modeling

1. In order to demonstrate compliance of the proposed LED replacement lamps to the IESNA RP-22-05 requirements, submit lighting calculation for 100 running feet of tunnel.

   a. Calculation Parameters:

      1) LLF – 0.58 including:

         a) Power Supply Loss;

         b) Tunnel Surface Dirt Depreciation;

         c) LED Lamp Lumen Depreciation

      2) Reflectance's:

         a) Ceiling – 20%;

         b) Walls – 50% Reflectance;

         c) Roadway Classification R4 – smooth texture asphalt.

      3) Existing Tunnel Lighting:

         a) The existing fluorescent fixtures are spanned between existing power node pockets (former recessed light boxes), which are roughly twenty-feet on center, so that two (8) feet fluorescent fixtures are located in between the 20-foot span.

         b) For fixture locations, tunnel cross-section, and dimensions see Appendix B.

2. All modeling shall be performed in AGi32 version 2.02 or later. All files along with printouts shall be submitted with the bid proposal. No other modeling

software shall be accepted.

a. *Provide a complete listing of all reflectances used for computer modeling.*

b. All assumptions used in the modeling shall be submitted in tabular form as well as in the submitted files. This shall include LED lamp efficiency, lumen deprecation, surface reflectance values (roadway, ceiling, and walls), power supply efficiency, lumen value at design junction temperature and drive current, drive current and forward voltage, etc.

c. All calculations shall be run with an internal summer tunnel temperature of forty-five (45) deg C.

d. Point by points shall be run on the roadway surface and tunnel walls for luminance (cd/sqm) and illuminance (Fc). This shall be performed for each of the following design conditions: Initial installation (less than 500 hours), five (5)-years, and ten (10)-years for daytime light levels.

e. The model shall be run in full calculation mode, utilizing the radiosity calculation engine to compute luminance (cd/sqm) for the roadway surface and tunnel walls. *Veiling luminance shall also be included.*

f. Pseudo-color with scaling shall be provided.

In the event that any of the foregoing is requested and is not furnished within five (5) business days thereafter, or within such additional time as the Port Authority, in its sole discretion, may allow, the Port Authority may not be in a position to determine whether the bidder is qualified, whether the bidder understands the requirements of the contract, or whether the bidder is responsive and may, in its sole discretion, reject the bidder's bid.

END OF APPENDIX A

DIVISION 16
SECTION 16555C
LIGHT EMITTING DIODE (LED) DIRECT REPLACEMENT LAMP
APPENDIX B

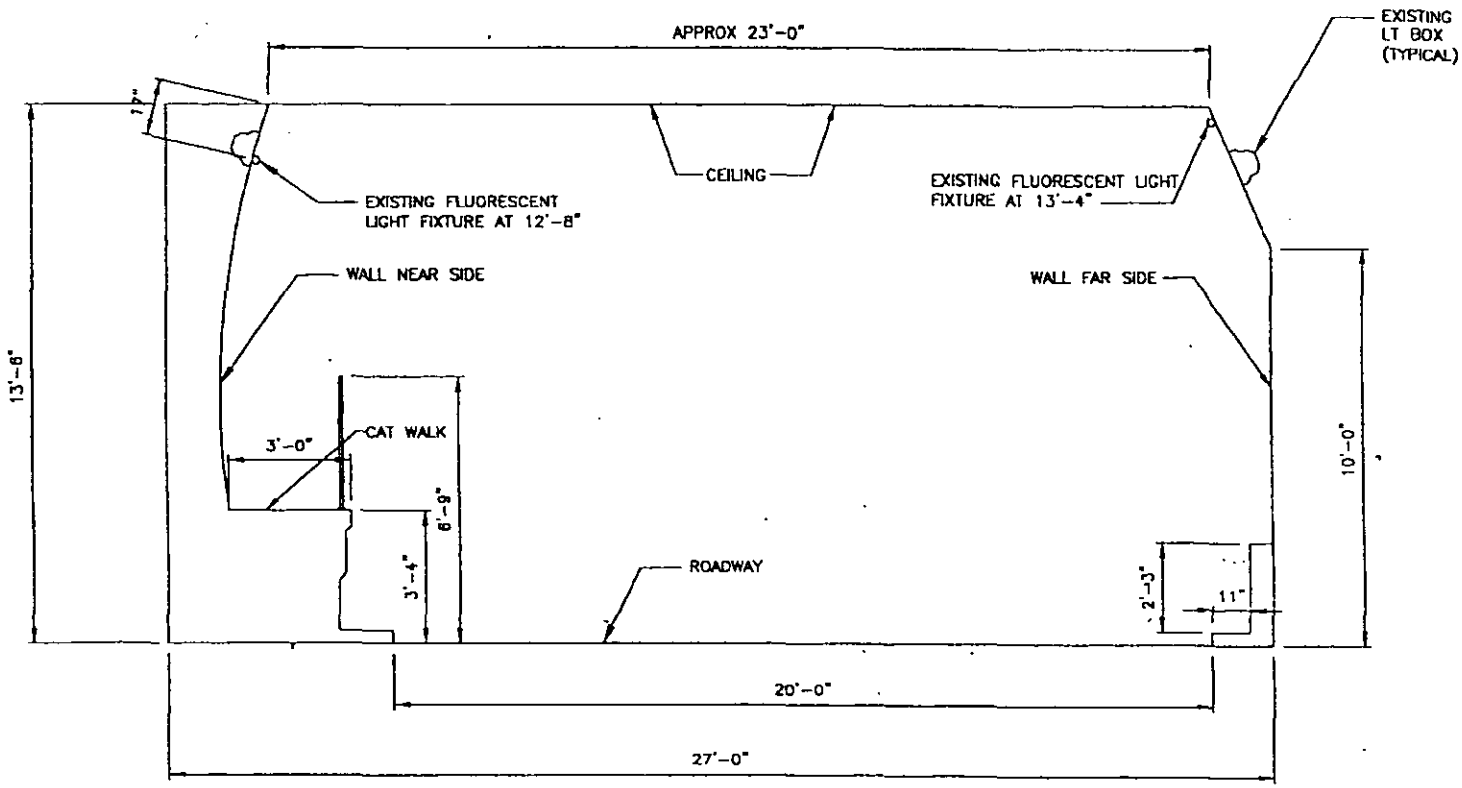

TUNNEL SECTION

NOTE: ALL DIMENSIONS ARE APPROXIMATE

THE PORT AUTHORITY OF NY & NJ	HOLLAND TUNNEL	ELECTRICAL	09-11-2010	
A.FRONGEL / D.LEAHY / A.STPIVAK	LED LIGHTING UPGRADE	DIVISION 16 SECTION 16555C APPENDIX B TUNNEL SECTION	HT-324,060 / 08-437000	BKE-1

New York Telecom Partners Proprietary: DO NOT DISTRIBUTE -- Document use is restricted

LED Lighting System Tests

for

Radio Frequency Impact Assessment

Revision F

4/29/2008

Contents

1 Purpose 3

1.1 Summary of existing antenna system 3

1.2 Test Equipment List 4

2 Test Procedures 4

2.1 Bench Tests 4

2.2 In-Tunnel Pilot System Tests 5

2.2.1 PHASE 1: BASELINE TUNNEL MEASUREMENTS 5

2.2.2 PHASE 2: DELLUX PILOT LIGHTING SYSTEM TUNNEL MEASUREMENTS: 7

2.2.3 PHASE 2A: LSI PILOT LIGHTING SYSTEM TUNNEL MEASUREMENTS: 8

3 Test Details 9

3.1 RF Pattern (Coupling Loss) Measurements: 9

3.2 RF Insertion Loss (Attenuation) Measurements: 10

3.3 Noise/Spurious Measurements: 10

3.4 Two-Tone Intermodulation Measurements: 10

4 Test Reports 10

1 Purpose

The Port Authority is preparing to replace the lighting system in Holland Tunnel with a new system that will be installed in close proximity to the existing antenna cable network. The current plan is to implement a pilot installation, assess the impact & take corrective actions before implementing the final installation.

The Purpose of this document is introduce RF testing criteria to help insure the final LED lighting system introduces no adverse degradation to the existing Port Authority Radio Systems as well as commercial wireless carriers in the tunnel.

Radio and Wireless Stakeholders include Port Authority Radio users and NYTP. NYTP represents the commercial wireless carriers. The concern relates to dropped calls on the commercial wireless services, poor radio communications to Port Authority (Life Safety) radio system, and AM/FM radio broadcast as emergency announcement systems. The concern is primarily centered on RF blockage resulting coverage dead-spots, and Radio interference.

1.1 Summary of existing antenna system

The tunnel has two radiating antenna cables installed by NYTP, and a least one additional cable for other Port Authority uses along the length of the tunnel wall (on the near wall), An existing AM radio antenna also exists on the tunnel Far wall.

Radio and Wireless systems on the NYTP dual antenna cables are:
AM Radio:
FM Radio:
VHF Radio:
UHF Radio:
800 MHz iDEN/SMR:
Cellular band:
PCS Band:
AWS Band:
WiFi Band

The antenna on the Far wall transmits commercial AM radio broadcasts.

The existing radio and wireless systems in the tunnels can be potentially impacted by the LED lighting system in the following manner:

- Downlink Interference to Port Authority field radios operating in the VHF, UHF, and 800 MHz SMR bands.
- Uplink Interference to the Port Authority radio head end equipment operating in the VHF, UHF, and SMR bands.
- Downlink interference to public's car radios tuned to the FM and AM radio stations.
- Downlink interference to NYTP's cellular phone devices operating in the iDEN and Cellular bands, PCS Band, and the AWS band.

- Uplink interference to NYTP's cellular phone head-end equipment operating in the 800 MHz iDEN and Cellular bands, PCS Band, and the AWS band.
- RF coverage blockage introduced by the LED lighting fixtures depending on their placement on the tunnel walls. This is applicable to all radio and wireless spectrum listed above.

1.2 Test Equipment List

Spectrum Analyzer	Advantest U3741 with Opt 28 battery pack & DC power supply (or equivalent)
Signal Generator (Qty 2)	Rohde and Schwarz SML03 (or equivalent)
Power Measurements	Power Meter or Spectrum Analyzer
Log Periodic Antenna, 290MHz -2000MHz	A.H. Systems SAS-510-2 (or equivalent)
Biconical Antenna, 20MHz – 330MHz	A.H. Systems SAS-542 (or equivalent)
Active Monopole Antenna, 9kHz – 60MHz	A.H. Systems SAS-550-1B (or equivalent)
Passive Loop Antenna, 20Hz – 2MHz	A.H. Systems SAS-560 (or equivalent)
Two-way combiner/divider	Microlab/FXR D2-14FN (800-2200), AFL (70-1000),
Directional and Omnidirectional Test antennas	Various

2 Test Procedures

2.1 Bench Tests

The objective of bench tests are to establish the potential severity of impact before conducting pilot tests in the tunnel, so that data obtained can be used in identifying the fixture locations for the pilot tests.

RF emissions testing of an LED lighting sample unit will be completed by NYTP, in conjunction with the Port Authority, at a Port Authority provided venue with appropriate AC power feeds provided for the Dellux LED lighting system sample fixture. The Port Authority will obtain and provide the Dellux LED lighting system sample fixture to be tested as well. (Coordination POC will be Ken Sagrestano). NYTP will complete emissions testing using a broadband antenna and spectrum analyzer to assess the spurious signals and their related power levels emitting from the antenna at distances of 1ft (for uplink bands) and 6ft (for downlink bands) from the cable. Testing will be completed in the following bands:

Downlink tests:
-AM Radio, FM Radio, VHF Radio, UHF Radio
- Port Authority Band:
- iDEN/SMR Band:
-Cellular band, PCS band, AWS Band, WiFi band

Uplink tests:
-VHF Radio, UHF Radio
- : Port Authority Band:
-)EN/SMR Band:
-Cellular band, PCS band, AWS Band, WiFi band

NYTP will also complete two-tone intermodulation testing using two signal generators, antennas, and a spectrum analyzer to assess potential intermodulation product generation due to the non-linear junction devices present within the LED light fixtures. Tests will be completed at a distance that simulates a condition similar to the field. Since the RADIAX cables are within 12 inches of the fixture when installed, the transmit power of the test system which will use a point-source antenna instead of RADIAX, along with its spacing of the antenna from the LED fixture, will be set to ensure similar power conditions that would be experienced in the tunnels. The tunnel RADIAX has a known coupling loss value as measured by a test receiver in a multi-path environment, so this coupling loss value, extrapolated to 12 inches or less distance, will be used along with the maximum power per carrier on the RADIAX cable at its launch point, to determine the similar power and spacing of the test antenna system; or at least test levels that are greater or equal to the equivalent operational levels. Testing will be completed in the following bands:

Downlink tests:
-VHF Radio, UHF Radio
- Port Authority Band:
- iDEN/SMR Band:
-Cellular band, PCS band, AWS Band, WiFi band

Upon completion of these tests, a test report will be finalized and submitted by NYTP to the Port Authority engineering staff for review and assessment to amend or modify, if required, the in-tunnel testing phase outlined below. These tests will determine if any major adjustments in the proposed fixture location is required prior to the in-tunnel testing. For expediency, this test report may be reviewed through a meeting/conference call between NYTP and the Port Authority in the event NYTP believes the test results deserve critical attention.

2.2 In-Tunnel Pilot System Tests

The preliminary configuration of the Dellux system in-tunnel testing pilot system would require at least four 4-foot fixtures separated 20-feet apart (centerline to centerline), mounted using the proposed revised mounted bracket design from Dellux. The following tests will be performed in that section of the tunnel in two phases – Phase 1 occurring prior to the installation of the test system, and Phase 2 occurring following the installation. In Phase 2, further emissions testing will be conducted.

It is noted that the LED system will replace the current fluorescent lighting as well as its ballasts. Any noise generated by the existing ballasts will need to be accounted for in the test results. Thus, if the existing ballast EMI is part of the existing noise floor, then the removal & replacement of electronic ballasts should make appropriate adjustments in calculations of final impacts.

2.2.1 PHASE 1: BASELINE TUNNEL MEASUREMENTS

Baseline testing will be performed on the cable network prior to the introduction of the Dellux system in the coverage area where the pilot system will be installed (the near wall portion).

Since the LSI pilot system has already been installed, baseline measurements will be performed while the LED system is turned off.

½" RADIAX Cable – Near Lane (far lane cable testing not required):

AM Band Measurements:

This is a downlink test only. The objective is to baseline the performance of the cable system prior to the introduction of the lighting system.

-Insertion Loss measurement over the section of cable under test
-Coupling Loss (coverage) measurement over the section of cable under test.

RXL7 1-5/8" RADIAX Cable – Near Lane:

These are downlink and uplink tests. The objective is to baseline the performance of the cable system prior to the introduction of the lighting system.

-Insertion Loss measurement over the section of cable under test
-Coupling Loss (coverage) measurement over the section of cable under test
-Two-tone Intermodulation test over the section of cable under test, for the following bands (typically measured at the center of the bands of interest):

-FM Band
-VHF Band
-UHF Band
- Port Authority Downlink Band:
- iDEN/SMR Downlink Band:
-Cellular downlink band

RCT7 1-5/8" RADIAX Cable – Near Lane:

These are downlink and uplink tests. The objective is to baseline the performance of the cable system prior to the introduction of the lighting system.

-Insertion Loss measurement over the section of cable under test
-Coupling Loss (coverage) measurement over the section of cable under test
- Two-tone Intermodulation test over the section of cable under test, for the following bands (typically measured at the center of the bands of interest):

- : Port Authority Uplink Band:
- iDEN/SMR Uplink Band:
-Cellular uplink band
-PCS uplink and downlink bands
-AWS uplink and downlink bands
-WiFi band

2.2.2 PHASE 2: DELLUX PILOT LIGHTING SYSTEM TUNNEL MEASUREMENTS:

These tests are to be performed upon installation of the pilot system. Coordination may be required between NYTP and the Port Authority to provide access for the injection of test signals onto Port controlled systems (800 trunk radio, VHF, UHF, AM and FM systems).

½" RADIAX Cable – Near Lane (far lane cable testing not required):

AM Band Measurements:
This is a downlink test only. The objective is to check how much EMI/noise the fixtures add to the existing noise floor, and to check how much impact the fixture itself has on the coupling characteristics of the cable, and thus allow quantification of the reduction of the reception of AM radio signals in patron cars.

-Insertion Loss measurement over the section of cable under test
-Coupling Loss (coverage) measurement over the section of cable under test.
-Spurious/Noise emissions testing at select points within the tunnel (start, mid, end, and 100ft away from pilot system)

RXL7 1-5/8" RADIAX Cable – Near Lane:

This is a downlink and uplink testing. The objective is to check how much EMI/noise the fixtures add to the existing noise floor, and to check how much impact the fixture itself has on the coupling characteristics of the cable, and thus allow quantification of the reduction of the reception of various radio signals.

-Insertion Loss measurement over the section of cable under test
-Coupling Loss (coverage) measurement over the section of cable under test
- Two-tone Intermodulation test over the section of cable under test, for the following bands (typically measured at the center of the bands of interest)
-Spurious/Noise emissions testing at select points within the tunnel (start, mid, end, and 100ft away from pilot system):

-FM Band
-VHF Band
-UHF Band
- Port Authority Downlink Band:
- iDEN/SMR Downlink Band:
-Cellular downlink band

RCT7 1-5/8" RADIAX Cable – Near Lane:

This is a downlink and uplink testing. The objective is to check how much EMI/noise the fixtures add to the existing noise floor, and to check how much impact the fixture itself has on the coupling characteristics of the cable, and thus allow quantification of the reduction of the reception of various radio signals

-Insertion Loss measurement over the section of cable under test
-Coupling Loss (coverage) measurement over the section of cable under test
- Two-tone Intermodulation test over the section of cable under test, for the following bands (typically measured at the center of the bands of interest)
-Spurious/Noise emissions testing at select points within the tunnel (start, mid, end, and 100ft away from pilot system):

- Port Authority Uplink Band:
- iDEN/SMR Uplink Band:
-Cellular uplink band
-PCS uplink and downlink bands
-AWS uplink and downlink bands
-WiFi band

2.2.3 PHASE 2A: LSI PILOT LIGHTING SYSTEM TUNNEL MEASUREMENTS:

An existing prototype lighting system from an alternate vendor is already installed in the Holland Tunnel which spans approximately 140 feet (21 fixtures) and is installed on each tunnel wall. No specific baseline data was taken in the location of this prototype system, so data will be compared, with noted exceptions and where applicable (i.e., age of system), with the initial testing performed at the time of the multiband system implementation in 2000/2001. The purpose of this testing will be to determine the impact, if any, of expanding the prototype system to the entire length of the tunnel.

<u>½" RADIAX Cable – Near Lane (far lane cable testing not required):</u>

AM Band Measurements:

This is a downlink test only. The objective is to check how much EMI/noise the fixtures add to the existing noise floor, and to check how much impact the fixture itself has on the coupling characteristics of the cable, and thus allow quantification of the reduction of the reception of AM radio signals in patron cars.

-Insertion Loss measurement over the section of cable under test
-Coupling Loss (coverage) measurement over the section of cable under test.
-Spurious/Noise emissions testing at select points within the tunnel (start, mid, end, and 100ft away from pilot system)

<u>RXL7 1-5/8" RADIAX Cable – Near Lane:</u>

This is a downlink and uplink testing. The objective is to check how much EMI/noise the fixtures add to the existing noise floor, and to check how much impact the fixture itself has on the coupling characteristics of the cable, and thus allow quantification of the reduction of the reception of various radio signals.-Insertion Loss measurement over the section of cable under test.

-Coupling Loss (coverage) measurement over the section of cable under test, for the following bands (typically measured at the center of the bands of interest)
-Spurious/Noise emissions testing at select points within the tunnel (start, mid, end, and 100ft away from pilot system):

-FM Band
-VHF Band
-UHF Band
- Port Authority Downlink Band:
- iDEN/SMR Downlink Band:
-Cellular downlink band

RCT7 1-5/8" RADIAX Cable – Near Lane:

This is a downlink and uplink testing. The objective is to check how much EMI/noise the fixtures add to the existing noise floor, and to check how much impact the fixture itself has on the coupling characteristics of the cable, and thus allow quantification of the reduction of the reception of various radio signals.

-Insertion Loss measurement over the section of cable under test
-Coupling Loss (coverage) measurement over the section of cable under test, for the following bands (typically measured at the center of the bands of interest)
-Spurious/Noise emissions testing at select points within the tunnel (start, mid, end, and 100ft away from pilot system):

- Port Authority Uplink Band:
- iDEN/SMR Uplink Band:
-Cellular uplink band
-PCS uplink and downlink bands
-AWS uplink and downlink bands
-WiFi band

3 Test Details

3.1 RF Pattern (Coupling Loss) Measurements:

A CW test signal is injected at the head end in the band of interest at a signal level of +10dBm. The RF signal is recorded on a spectrum analyzer using a calibrated antenna mounted to the vehicle while driving through the test area of the tunnel at a defined rate of speed (no more than 5 mph) at "0-span" to record the actual trace of the signal as the test analyzer/antenna system is moved along the tunnel parallel to the cable under test. The signal is captured on the analyzer and transferred to a PC for plotting and recording purposes. As mentioned in 2.2.2, this will probably require PA radio shop coordination since PA radio repeaters may need to be temporarily disconnected, or connection modified with a hybrid splitter.

3.2 RF Insertion Loss (Attenuation) Measurements:

Even minor changes in coupling performance of the cable can have an impact on the attenuation of the cable. For long runs of cable, even slight changes in attenuation can have an impact on performance at the ends of the link (e.g., at the NY-NJ state line). Using the CW test signal at the injection point and a power meter at connectorized junction points in the RADIAX cable, the CW signal at the input to the RADIAX and at the end of the RADIAX cable under test is recorded (at the connector). The results are compared with previous results and catalog specifications.

3.3 Noise/Spurious Measurements:

Using a spectrum analyzer and test antenna, the noise and spurious power isl be measured using a calibrated log-periodic antenna in the bands of interest.

3.4 Two-Tone Intermodulation Measurements:

Using two signal generators and a spectrum analyzer, the two RF signals of known frequency A and B, are combined using high-isolation combiners, and injected into the near end of the cable under test at a signal level of +10dBm. The spectrum analyzer is attached a test antenna in the field of coverage, where the primary A and B signal levels are recorded, along with the 2A+B, 2A-B, 2B+A and 2B-A intermodulation product signal levels.

4 Test Reports

The bench tests and pre- and post-RF measurement report will be provided to Port Authority engineers for review and consultation with NYTP engineering staff to determine corrective actions, if required. The report will include all test data and associated procedures. Data from the Pilot system will be analyzed and extrapolated to the scenario of full tunnel installation. The reports will be used to determine the overall impact expansion of either lighting system will have on the RF networks already installed in the tunnels. Corrective actions might include additional cable tests, relocation of lighting equipment, relocation of cables, etc. A set of the results will be provided to Andrew Corporation as well, for their review and feedback. Independent test reports will be provided for the Dellux and LSI option. Information Dellux will not be reflected in the LSI report and vice versa. Non Disclosure clauses will be applied.

Upon verification that performance meets acceptable criteria, additional testing should be performed on regular, defined intervals as additional light fixtures are installed, to ensure performance is as expected and/or to ensure no cable damage has occurred. Also, increased visual inspections (drive inspections) will be required on a minimum once per week basis during the construction efforts to spot check the system operation (using cell phones and two-way radios) and to visually verify integrity of the cable system. Drive test results shall be documented and provided by NYTP on a recurring basis.

Test Report
LED Lighting System Tests

for

Radio Frequency Impact Assessment

Phase I – Dellux LED Bench Tests

Revision A

6/26/2008

Contents

1 Purpose 3
1.1 Test Equipment List 3
2 Test Results – Spurious Measurements 4
2.1 Test Setup 4
2.2 Graph Formats 5
2.3 Bench Test Data 5
2.4 Bench Test Data Analysis 6
3 Test Results – Two-Tone Measurements 9
3.1 Test Setup/Results 9
4 Recommendations 10
5 APPENDIX I. Spurious Charts/Calculations 11
6 APPENDIX II. Intermodulation Test Data 28

1 Purpose

The Port Authority is preparing to replace the lighting system in Holland Tunnel with a new system that will be installed in close proximity to the existing antenna cable network. The plan is to complete detailed testing of the LED system through two phases - bench testing of the LED system to determine if harmful spurious emissions are generated by a stand-alone unit, and field testing of a partial (pilot) installation of the LED system in the tunnels. The tests results of both phases will be used to assess the impact & take corrective actions before implementing the final installation.

This report details the findings of the first phase of testing – the Bench Tests.

1.1 Test Equipment List

Spectrum Analyzer	Advantest R3131A-74
Signal Generator (Qty 2)	Rohde and Schwarz SML03
Log Periodic Antenna, 290MHz -2000MHz	A.H. Systems SAS-510-2
Biconical Antenna, 20MHz – 330MHz	A.H. Systems SAS-542
Active Monopole Antenna, 9kHz – 60MHz	A.H. Systems SAS-550-1B
Passive Loop Antenna, 20Hz – 2MHz	A.H. Systems SAS-560
Two-way combiner/divider	HP 11636A

2 Test Results – Spurious Measurements

2.1 Test Setup

Tests were configured as outlined in the test procedure, with a few exceptions. Due to time constraints, all tests were completed at the nominal distance of one foot from the test source (vs. 1 ft for the uplink and 6 ft for the downlink frequencies). Calibrated antennas were used at each band.

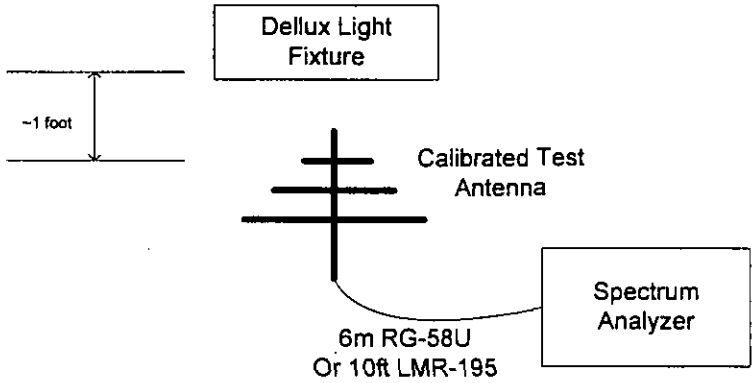

Figure 2.1-1: Test Configuration Overview

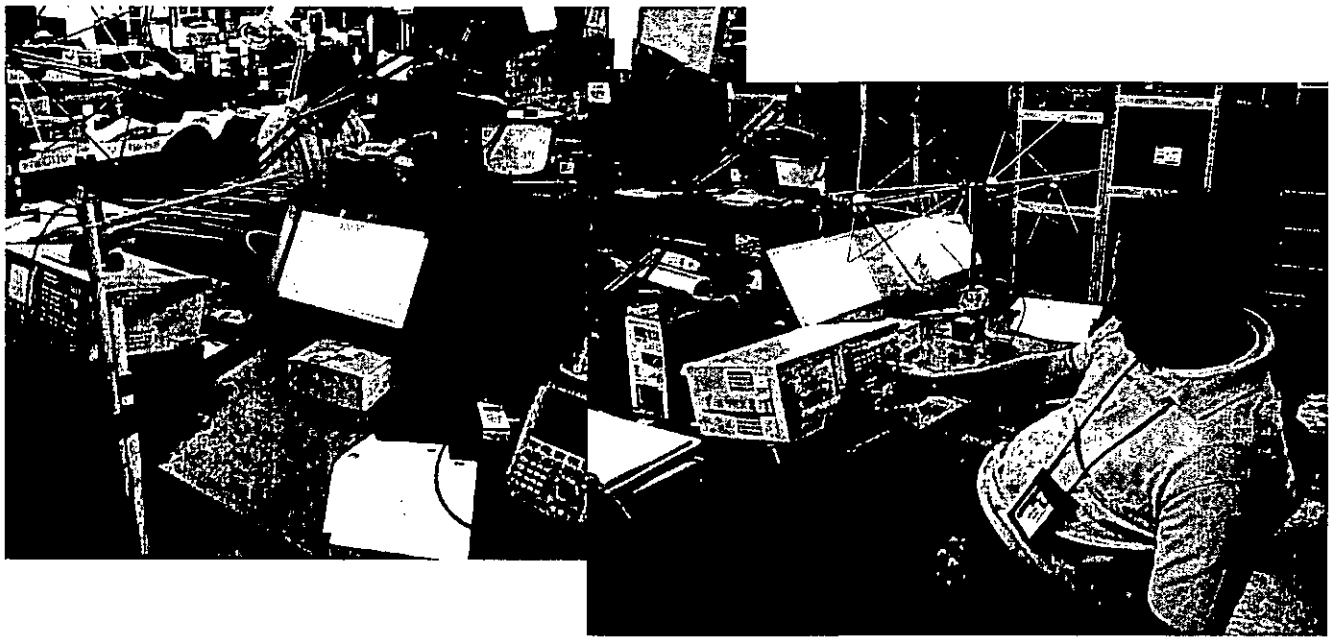

Figures 2.1-2 and 2.1-3: Test Configurations (>450MHz and FM/VHF)

2.2 Graph Formats

The tests results are provided using graphs that show the portion of the frequency spectrum under test, with two graphs and two Y axes. The left axis and graph (in blue) represent the spectrum with the Dellux lighting turned ON, and the right axis and graph (in red) represent the spectrum with the Dellux lighting turned OFF. In order to show both spectrums in detail, one of the axes is shifted by 10dB. An example is shown below in Figure 2.2-1

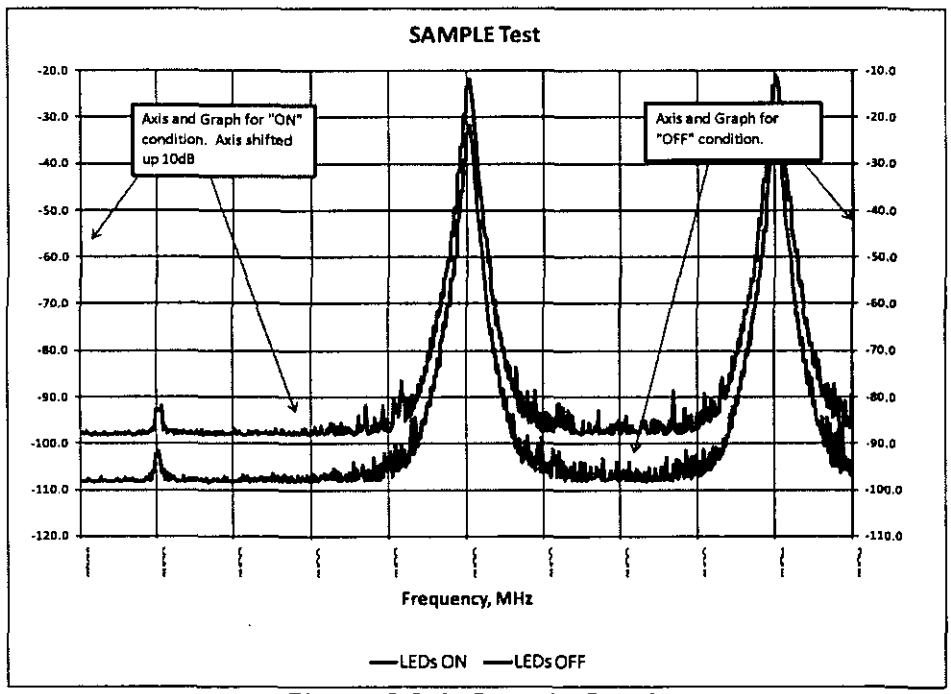

Figure 2.2-1: Sample Graph

2.3 Bench Test Data

The objective of the bench tests is to establish the potential severity of impact due to spurious emissions from the Dellux lighting system prior to its deployment into the tunnel system. RF emissions testing of the Dellux LED lighting sample was completed by NYTP, in conjunction with the Port Authority, at the Port Authority Radio Shop on May 13-14, 2008. NYTP completed emissions testing using broadband antenna(s) and a spectrum analyzer to determine what spurious signals and their related power levels are emitting from the antenna at a distance of 1ft (for all bands).

Details of all tests are provided in Appendix I. The following results were obtained:

AM Radio - No spurious detected
FM Radio, VHF Radio – No spurious detected
UHF Radio - Spurious Detected

800MHz bands - No spurious detected
PCS Bands – No spurious detected.
AWS Bands – No spurious detected.

Interfering carriers were detected in the UHF band at the following frequencies, due most likely from an on-board clock or switching power supply:

The spacing between each of these spurious signals is We contacted Dellux technical support and were advised that the Dellux lighting system uses a 24MHz crystal for its CPU clock. Also, detected to the left and right were 'side tones' at approximately away from the interfering signal. There was no direct correlation found for this interval (see charts in Appendix I for details).

A spurious signal was also detected at . This is most likely a harmonic of the spurious signal or could possibly be a 2nd order product of the and No other harmonics or 2nd order products were detected.

Of all the spurious signals detected, spurious signals could pose the biggest threat to service in the PA tunnels due to their proximity to operating Port Authority Land Mobile Radio service channels.

2.4 Bench Test Data Analysis

The worst-case spurious amplitude of was measured at using the test configuration above. This represents the power from one LED light, at one foot distance, using the calibrated test antenna. To determine the potential effect of many lights over the full length of the tunnel, we must factor in the additive effects of multiple spurious signals generated by multiple LED lights, with each coupling into the RADIAX cable at a specific distance from the cable over the entire length of the cable (which would include the loss of the cable back to a common receiver point. This is depicted in the illustration below:

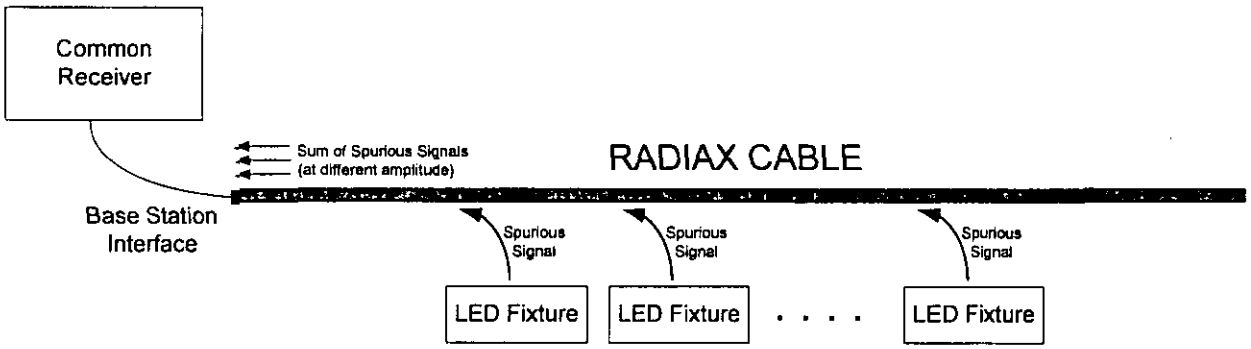

Figure 2.4-1: Additive Effect of Spurious Signals

First, factoring the calibrated antenna gain at : and using a path loss of one foot, the theoretical ERP of each LED light is when starting from a measured value of - in the test system. With an ERP of , we can estimate, based on the specified median coupling loss of the RADIAX cable, the actual signal amplitude coupled into the cable.

The RADIAX cable has a coupling loss of when measured at six feet. When factored to one foot, the coupling loss is . When factored to 25 feet (the other side of the tunnel), this becomes If we are to assume LED fixtures are placed at intervals of every 20 feet over the length of the tunnel (e.g., four foot long LED fixtures with 16 feet spacing between), the maximum number of LED lights on each side of the tube, over the entire length of the tunnel would be 428 for the North Tube and 419 for the South Tube.

The additive effect of the far lane and the near lane is negligible since the net coupling loss (i.e., path loss) is much higher for the larger distance, and thus the difference in received power level between the near lane (1 ft) and the far lane (~25ft) is in excess of .

The additive effect of all near lane fixtures was determined through an iterative process where each fixture radiated the power level described above, at a spacing of 1 ft from the RADIAX. The cable insertion loss to the fixture (20ft, 40ft, 60ft... away from the head-end) was calculated at each fixture point to represent a net signal strength from each fixture received at the head-end. The amplifier gain at the NYRB was also accounted for in the iterative process. The net additive effect of all of these fixtures in this scenario is approximately of signal increase, assuming all spurious signals added in phase, resulting in net noise/spurious signal of at the common receiver. This would result in extremely degraded performance for any radio systems receive channel operating on or near that frequency. The specifics of this calculation are provided in Appendix I.

One might note that the near/far lane signal differential above assumes free space propagation of the signal, and tunnels generally demonstrate something other than free space propagation. Assuming a worst case scenario where the far lane lights couple into the cable at the same level of the near lane lights, the net increase in power would still be no more than a factor of

3 Test Results – Two-Tone Measurements

3.1 Test Setup/Results

Tests were configured as outlined in the test procedure, with a few exceptions. Due to time constraints, all tests were completed at the nominal distance of one foot from the test source.

Tests at the lower end of the spectrum (AM through UHF) could not be performed due to lack of ability to achieve power levels similar to those in the tunnels for these frequencies. A power amplifier will be rented to perform tests in those bands at a future date. No issues were detected at lower power levels . An example at UHF is shown in Appendix II.

Since systems above operate at an input to the system of 1 watt or less, by the time these signals reach the tunnels (after combining/splitting/coupling and feed lines), the signals are lower in level, such that testing at power per channel is suitable for these bands.

An example of a two tone test at PCS frequencies is provided below. Like the previous section, the test graphs show the results with the LEDs on and off, with an offset in the data for clarity purposes. Additional tests (800 band, PCS band, and AWS band) are provided in Appendix II. No issues were found with the LED lighting system generating Intermod at these frequency bands.

4 Recommendations

The testing indicates a potential for problems with the Dellux lighting in the band and potentially the Though no services are presently in use in this band, it is possible that future services (licensed or unlicensed) may be financially viable in that band, so restricting service due to potential interference may not be in the long term best interest of the Port Authority.

The significant interference discovered across the band suggests that the Dellux lighting should not be recommended for use at any of the proposed locations where the proximity to the cable is within a few feet, until these units can be either better shielded or modified in some way to significantly minimize, or preferably eliminate, the spurious emissions at the levels discovered in our tests. Otherwise, the spurious frequencies identified in Section 2.3 must be considered unavailable for future use.

Test Report

LED Lighting System Tests

for

Radio Frequency Impact Assessment

Phase II – Tunnel Coverage Tests

Dellux Lighting System

Revision -

06/30/2008

Contents

1 Purpose 3
1.1 Test Equipment List 3
2 Test Results – Coupling and Insertion Loss Measurements 4
2.1 Test Setup 4
2.2 Graph Formats 5
2.3 Pilot System Test Data 6
2.4 Field Test Data Analysis 7
3 Recommendations 8
4 APPENDIX I. Pre Testing 9
4.1 RXL7 Cable Base Line Tests 9
4.2 RCT7 Cable Baseline Tests 11
5 APPENDIX II. Post Testing 15
5.1 RXL7 Cable Post Light Fixture Install 15
5.2 RCT7 Cable Post Light Fixture Install 18
6 APPENDIX III. RXL7 series vs RCT7 series cables. 22

1 Purpose

The Port Authority is preparing to replace the lighting system in Holland Tunnel with a new system that will be installed in close proximity to the existing antenna cable network. The plan is to complete detailed testing of the LED system through two phases - bench testing of the LED system to determine if harmful spurious emissions are generated by a stand-alone unit, and field testing of a partial (pilot) installation of the LED system in the tunnels. The test results of both phases will be used to assess the impact & take corrective actions, if necessary, before implementing the final installation.

This report details the findings of the second phase of testing – the coverage testing with pilot system of LED fixtures installed in the tunnel.

1.1 Test Equipment List

Spectrum Analyzer	Advantest R3131A-74
Signal Generator (Qty 2)	Rohde and Schwarz SML03
Log Periodic Antenna, 290MHz -2000MHz	A.H. Systems SAS-510-2
Biconical Antenna, 20MHz – 330MHz	A.H. Systems SAS-542
Active Monopole Antenna, 9kHz – 60MHz	A.H. Systems SAS-550-1B
Passive Loop Antenna, 20Hz – 2MHz	A.H. Systems SAS-560
Two-way combiner/divider	HP 11636A

2 Test Results – Coupling and Insertion Loss Measurements

2.1 Test Setup

The Holland Tunnel uses two RADIAX cables to provide radio coverage. One cable is an "RXL series" cable that provides coverage for FM, VHF, UHF, and downlink signals. The other cable is an "RCT series" cable that provides coverage from Each cable is mounted along the near lane of the tunnel, with the RXL series cable at the uppermost part of the wall near the ceiling, and the RCT series cable is approximately 1-2 feet below it. An overview of the different cable types is provided in Appendix III.

The Dellux LED fixtures were installed in the near lane of the south tube as a representative sample of the proposed lighting system considered for the entire tunnel. This pilot system of fixtures was mounted in a short section of the tube just prior to the NJ River Building Access Door, mounted approximately 1 ft below the lower RCT series cable. Tests on the cable were completed as outlined in the test procedure, with a baseline set of tests completed prior to the installation of the pilot system of LEDs, and the same tests completed after the installation of the pilot system, so that a comparison between the two sets of tests could be performed.

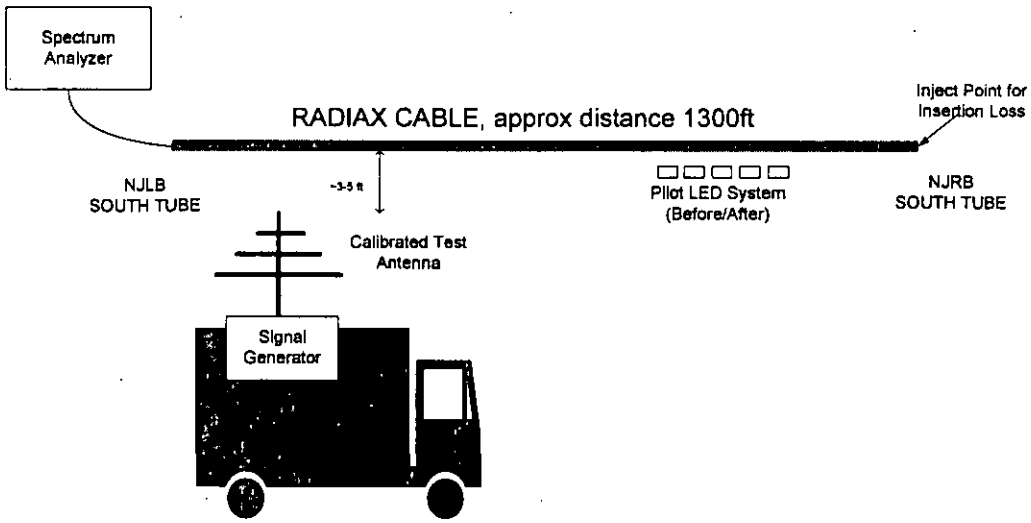

Figure 2.1-1: Test Configuration Overview

Tests were performed using on the two cables using a CW signal at various frequencies transmitted from a signal generator mounted on a test vehicle that travelled along the length of the cable. The CW signal was recorded in "0-span" using a spectrum analyzer located at the NJLB, which captured the signal in time intervals while the truck moved.

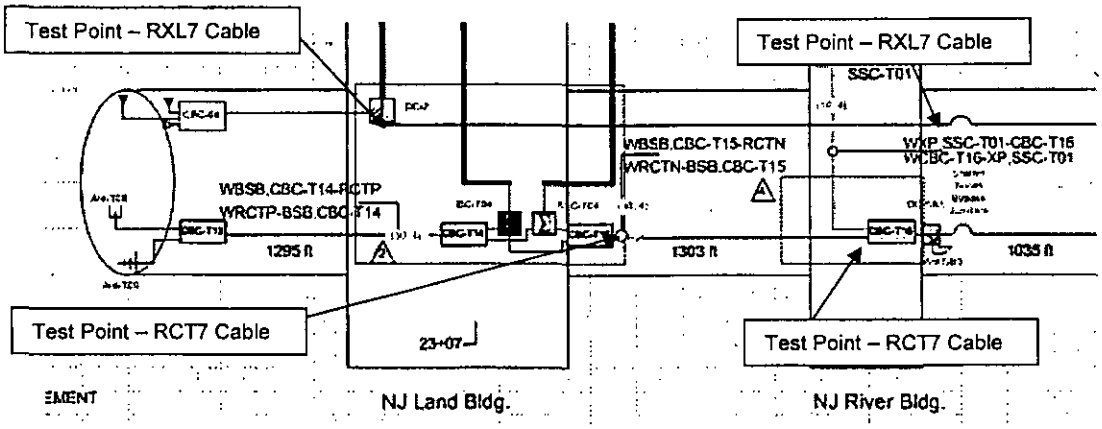

Figure 2.1-2 Test Location Detail

The test points identified for this test were chosen because they were the closest connection points in the cable network on either side of the pilot fixture system.

Figures 2.1-3 and 2.1-4: Test Break Points for each Cable

2.2 Graph Formats

The tests results are provided using graphs that show a measured loss trace, a coupling loss trace, and a calculated median loss trace. The measured loss trace includes insertion loss and coupling losses on the same trace (i.e,, the 'system loss'). This is evident on the graphs of higher frequencies where a 'slant' can be seen due to the higher insertion losses. The second trace has the insertion loss removed, which leaves just the coupling loss along the length of the cable under test. The median value of the coupling loss is a calculation of the median over the total number of data points of the coupling loss.

An example is shown below in Figure 2.2-1. The blue trace represents the measured loss which includes insertion and coupling loss. In this example, the signal *increases* over the length because the test vehicle was traveling from the NJRB toward the NJLB. The red trace represents the coupling loss only (insertion loss is removed).

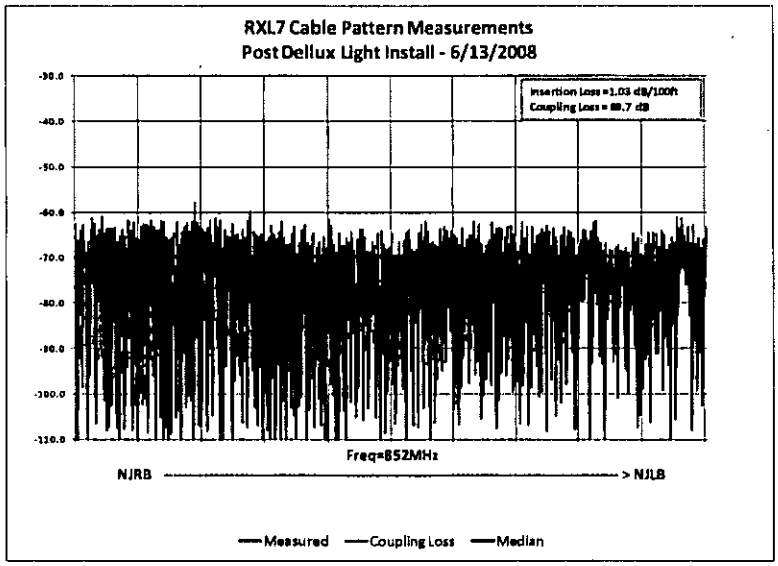

Figure 2.2-1: Sample Graph

The median coupling loss and the insertion loss of the cable, measured before and after pilot set of fixtures are installed, are compared to see if any detrimental changes in performance have occurred at any of the various frequencies tested.

2.3 Pilot System Test Data

The objective of the pilot system tests is to establish any detrimental impact due to obstruction/interference that may be caused by the Dellux lighting system when installed throughout the tunnels. When mounted in close proximity to radiating cables, metallic or conductive objects such as the light fixtures can have an adverse effect on radiating cable properties (namely coupling loss and insertion loss). In the Holland Tunnel system, this could impact performance of the wireless services that use the cable.

RF coupling and insertion loss testing of the pilot Dellux LED fixtures was completed by NYTP, in conjunction with the Port Authority, in the South Tube of the Holland Tunnel, between the Land Building and River Building, over a period of a few weeks in May and June, 2008. NYTP completed baseline testing (prior to the installation of the pilot LED system in the near lane) and post-testing using broadband antenna(s), signal generator, and a spectrum analyzer as outlined in the previous section to determine performance. Detailed plots of all tests are provided in Appendix I and Appendix II. A summary of the results are provided here:

Table 2.3-1: Measured Values

Cable	Freq, MHz	Cable Specification Insertion Loss (dB/100ft)	Cable Specification Coupling Loss (dB)	Pre Test Insertion Loss (dB/100ft)	Pre Test Coupling Loss (dB)	Post Test Insertion Loss (dB/100ft)	Post Test Coupling Loss (dB)
RXL7		0.21	66	0.24	59.9	0.25	62.5
RXL7		0.28	75	0.34	64.6	0.34	66.4
RXL7		0.53	85	0.61	68.7	0.70	71.1
RXL7		0.75	84	0.98	72.3	1.03	69.7
RXL7		0.77	84	1.00	64.0	1.05	68.5
RCT7		0.64	68	0.52	75.9	0.66	(n/a)
RCT7		0.66	67	0.57	69.3	0.67	70.4
RCT7		1.85	52	1.43	60.7	1.41	60.9
RCT7		1.66	55	1.35	64.3	1.33	66.6
RCT7		1.59	57	1.24	71.0	1.34	69.0
RCT7		1.49	59	1.16	73.7	1.36	74.1
RCT7		1.50	63	1.18	64.3	1.35	65.9

The cable specification comes from Andrew published data and typically represents measurements per a defined standard on a controlled test range in free space at 2m or 6m separation between the cable and the test antenna. RXL7 and RCT7 are the specific cable types form each series used in the Holland Tunnel. The "7" represents cable diameter of 1-5/8".

The Insertion loss and Coupling loss are independent measurements but make up the overall 'system loss' of the network. Differences between the Baseline and Post- test results and the specifications are expected because the tests in the Holland Tunnel could not directly follow the testing standards used by Andrew[1] The purpose of providing the specification data was to show our tests were comparable to the standard, but ultimately our goal was to maintain as much consistency as possible between Baseline and Post- tests to allow for comparisons between them.

Some other points to be noted about each cable include:

- For RXL7 cable, the interaction with metallic/conducting objects/walls can have a major impact on the individual performances of the insertion loss and/or coupling loss due to the nature of the design of the cable.
- For RCT7 cable, since it is tuned to 'radiate' signal vs creating a wave along its length, the affect of metallic objects/walls on insertion loss isn't as significant as it is with the RXL series cables.
- Objects within proximity to either cable can affect signal radiation properties

2.4 Field Test Data Analysis

Even in a stable environment such as a test range where Andrew and/or other manufacturers' test their cables, the tolerances on the measurements are pretty substantial (insertion loss +/- 10% and

[1] The IEC standards by which Andrew and other cable manufacturers test their radiating cables is in a free space environment away from metallic or conductive objects. Though the HT testing modeled the IEC standards, the environment is obviously not free space and our separation from the cable varied.

coupling loss +/- 5dB for RCT7 and insertion loss 10% and coupling loss +/-10dB for RXL7) in part due to manufacturing tolerances and in part due to environmental changes and test tolerances.

As evident in the graphs in the appendices, the repeatability of the tests performed was not to the level one would desire when making similar measurements in a more controlled laboratory environment. Changes in test vehicle speed, test vehicle/antenna spacing from the cable, and test vehicle direction of travel attributed to measurement variations between the Baseline and post tests. So, a direct comparison of the traces taken before and after the pilot LEDs were installed is generally not possible.

However, our primary goal is to compare overall performance from a system loss (coupling loss and insertion losses) perspective, as well as look for any anomalies in the traces as the test vehicle passed through the test fixture region of the cable. For the coupling and insertion losses, tests generally fell within the Andrew tolerance guidelines. So, even with variations in the traces, the net performance is similar (i.e., within reasonable tolerances) for the coupling and insertion loss values before and after the test fixtures were installed. In addition, we saw no visible impact in the traces as the test vehicle passed through the LED fixture location.

Under the test conditions presented, the overall performance of the RADIAX cables following the installation of the pilot fixtures in the near lane of the tunnel does not appear to have any adverse affect on coverage within the tunnels across all frequencies.

3 Recommendations

Based on the tests performed in the pilot test area, the LED lighting system is not causing any substantial obstructions such that installation of these fixtures could not continue if the same mounting methods are used. However, the pilot fixture system used for our testing is a relatively small sample of the planned LED system on which to base performance of the entire network (~1% of the total fixtures to be installed). It is suggested that on-going inspection and spot testing of the cable network be performed on regular intervals as new LED fixtures are installed.

6 APPENDIX III. RXL7 series vs RCT7 series cables.

(Excerpts from: "'Leaky' cables are a good thing", MRT Magazine, Oct 1, 2005, By Jay M. Jacobsmeyer, P.E.)

A radiating cable is a coaxial cable with apertures in its outer conductor. Several technologies have been developed to manufacture these apertures, from loose braid to corrugated and milled leaky cables and finally to slotted radiating cables. When the apertures or slots are spaced close together relative to a wavelength, the cable is a surface wave antenna and performs in coupled mode. When the slots are spaced roughly a wavelength apart, the cable will operate in radiating mode. (We will use the term radiating cable to mean any leaky coaxial cable, in either coupled or radiating mode. To distinguish between modes, we will use the term radiating-mode cable as opposed to radiating cable.) The geometries of coupled-mode and radiating-mode radiation are shown below.

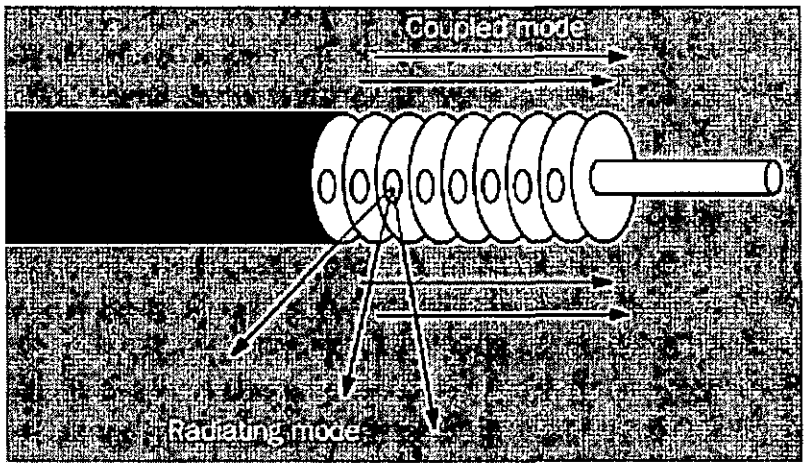

Coupled-mode radiation *(the RXL7 cable)* is a type of surface wave. Surface waves have a power flow that runs parallel to the cable axis. In free space, very little energy leaves the immediate vicinity of the cable. In practical environments, the fields are reflected and diffracted and provide good coverage within a region roughly 20 feet around the cable.

Signals from coupled-mode cables exhibit large variations in amplitude as one travels parallel to the cable. Coupling loss from coupled-mode cables increases with frequency.

When the slots are cut to ensure an in-phase addition of all apertures, the cable is then a radiating-mode cable *(the RCT7 cable)*. Such cables are more efficient than coupled-mode cables because they direct energy perpendicular to the cable axis. Radiating-mode cables exhibit stronger frequency dependence than do coupled-mode cables, but they still can be designed for broadband applications. If not designed properly, the cable will exhibit large attenuation spikes at resonant frequencies. Radiating-mode cables show high coupling loss at low frequencies up to the radiating-mode frequency, f_r. Above that frequency, the coupling loss drops rapidly and remains low for several hundred megahertz.

Radiating-mode cables also exhibit much smaller signal-level fluctuations than coupled-mode cables, and coupling loss from radiating-mode cables generally decreases with increasing frequency. Tests in Europe also show that radiating-mode cables are less sensitive to masking by vehicles and other moving objects in the vicinity of the cable.

Coupling loss is the most important performance specification for radiating cable. Coupling loss is defined as the ratio (in decibels, or dB) of power received at a half-wave dipole located a fixed distance from the cable to the power inside the cable. Coupling loss varies widely as one travels parallel to the cable. To be meaningful, coupling loss should be reported as a statistical measure, not a constant.

The most common measure is the 50% coupling loss, meaning the loss exceeded by 50% of the sample points. Typical values of 50% coupling loss range from 50 dB to 80 dB for a distance of 20 feet (6 meters) from the cable. Another common measure is the 95% coupling loss (loss exceeded by just 5% of sample points). The 95% coupling loss is more

meaningful than 50% coupling loss because no operator will settle for just 50% coverage. Also, two cables with identical 50% coupling losses could have significantly different 95% coupling losses.

Test Report

LED Lighting System Tests

for

Radio Frequency Impact Assessment

Tunnel Coverage Tests

LSI Linear Lighting System

Revision -

07/29/2008

Revision History

Revision	Revision Date	Revision Description

Contents

1 Purpose 4
1.1 Test Equipment List 4
2 Test Results – Coupling and Insertion Loss Measurements 5
2.1 Test Setup 5
2.2 Graph Formats 6
2.3 Pilot System Test Data 7
2.4 Field Test Data Analysis 11
3 Test Results – Spurious Emissions 11
3.1 Test Setup 11
3.2 Spurious Test Results 12
4 Recommendations 13
5 APPENDIX I. Post Testing 14
5.1 RXL7 Cable Post Light Fixture Install 14
5.2 RCT7 Cable Post Light Fixture Install 17
6 APPENDIX II: Spurious Test Results 21
7 APPENDIX III. RXL7 series vs RCT7 series cables 23

1 Purpose

The Port Authority is preparing to replace the lighting system in Holland Tunnel with a new system that will be installed in close proximity to the existing antenna cable network. The plan is to complete detailed testing of the LED system through tests of a partial (pilot) installation of the LED system in the tunnels. The test results will be used to assess the impact & take corrective actions, if necessary, before implementing the final installation.

1.1 Test Equipment List

Spectrum Analyzer	Advantest R3131A-74
Signal Generator (Qty 2)	Rohde and Schwarz SML03
Log Periodic Antenna, 290MHz -2000MHz	A.H. Systems SAS-510-2
Biconical Antenna, 20MHz – 330MHz	A.H. Systems SAS-542
Active Monopole Antenna, 9kHz – 60MHz	A.H. Systems SAS-550-1B
Passive Loop Antenna, 20Hz – 2MHz	A.H. Systems SAS-560
Two-way combiner/divider	HP 11636A
Broadband Amplifier, 25W, 1MHz to 500MHz	ENI 525LA

2 Test Results – Coupling and Insertion Loss Measurements

2.1 Test Setup

The Holland Tunnel uses two RADIAX cables to provide radio coverage. One cable is an "RXL series" cable that provides coverage for FM, VHF, UHF, and downlink signals. The other cable is an "RCT series" cable that provides coverage from . Each cable is mounted along the near lane of the tunnel, with the RXL series cable at the uppermost part of the wall near the ceiling, and the RCT series cable is approximately 1-2 feet below it. An overview of the different cable types is provided in Appendix III.

The LED fixtures were installed in the near and far lane of the south tube as a representative sample of the proposed lighting system considered for the entire tunnel. This pilot system of fixtures was mounted in a short section of the tube just passed the NJ Land Building Access Door, mounted approximately 1 ft below the lower RCT series cable. Tests on the cable were completed as outlined in the test procedure, with a baseline set of tests completed following the installation of the pilot system of LEDs.

In addition, spurious measurements were completed in close proximity to the LED system to determine if unwanted emissions from the LED system could impact the performance of the wireless services in the tunnels.

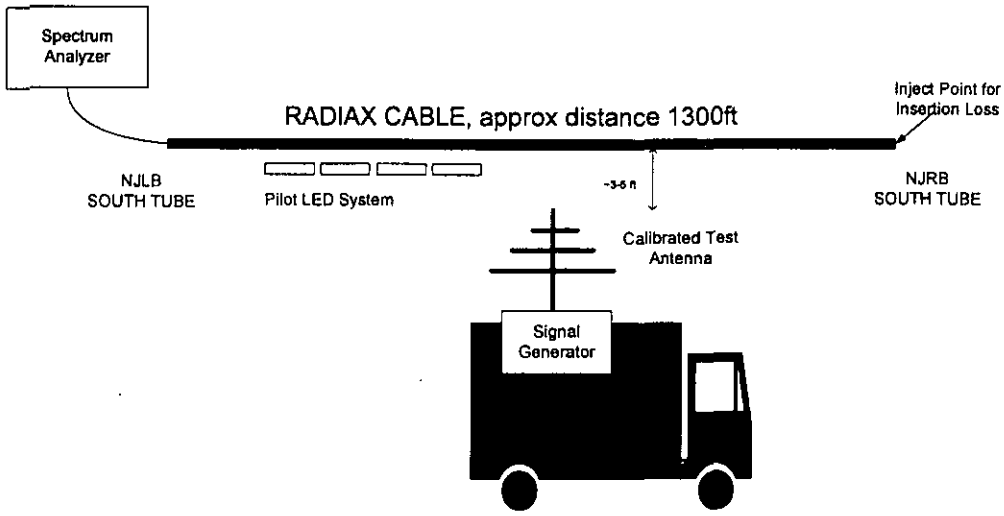

Figure 2.1-1: Insertion Loss/Coupling LossTest Configuration Overview

Tests were performed using on the radiating cables using a CW signal at various frequencies transmitted from a signal generator mounted on a test vehicle that travelled along the length of the cable. The CW signal was recorded in "0-span" using a spectrum analyzer located at the NJLB, which captured the signal in time intervals while the truck moved.

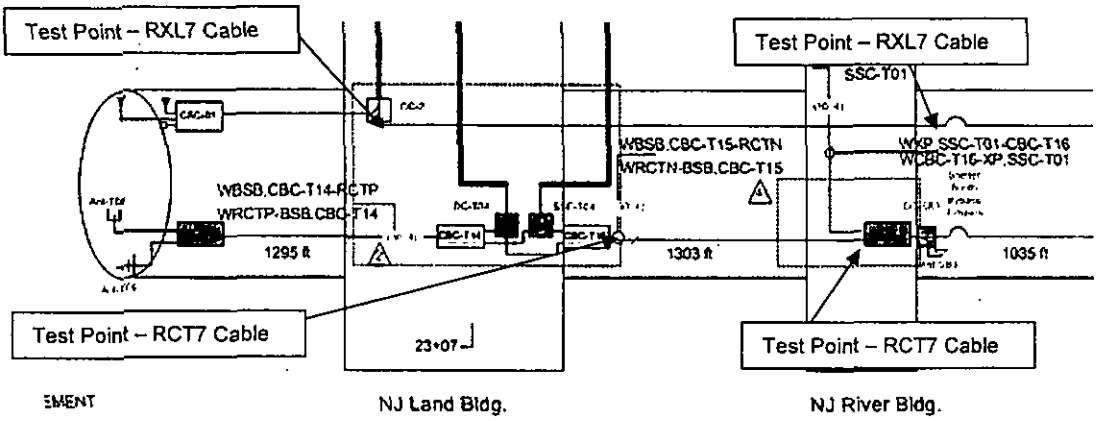

Figure 2.1-2 Test Location Detail

The test points identified for this test were chosen because they were the closest connection points in the cable network on either side of the pilot fixture system.

Figures 2.1-3 and 2.1-4: Test Break Points for each Cable

2.2 Graph Formats

The tests results are provided using graphs that show a measured loss trace, a coupling loss trace, and a calculated median loss trace. The measured loss trace includes insertion loss and coupling losses on the same trace (i.e,, the 'system loss'). This is evident on the graphs of higher frequencies where a 'slant' can be seen due to the higher insertion losses. The second trace has the insertion loss removed, which leaves just the coupling loss along the length of the cable under

test. The median value of the coupling loss is a calculation of the median over the total number of data points of the coupling loss.

An example is shown below in Figure 2.2-1. The blue trace represents the measured loss which includes insertion and coupling loss. In this example, the signal *decreases* over the length because the test vehicle was traveling from the NJLB toward the NJRB. The red trace represents the coupling loss only (insertion loss is removed).

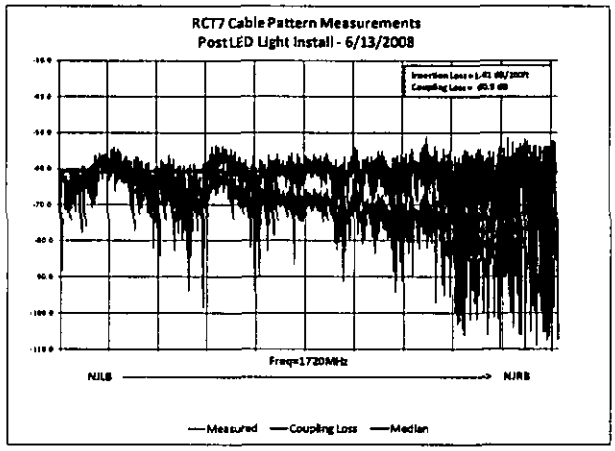

Figure 2.2-1: Sample Graph

The median coupling loss and the insertion loss of the cable, measured after pilot set of fixtures are installed, are compared with cable specifications and previous testing where possible, to see if any detrimental changes in performance have occurred at any of the various frequencies tested.

2.3 Pilot System Test Data

The objective of the pilot system tests is to establish any detrimental impact due to obstruction/interference that may be caused by the LSI lighting system when installed throughout the tunnels. When mounted in close proximity to radiating cables, metallic or conductive objects such as the light fixtures can have an adverse effect on radiating cable properties (namely coupling loss and insertion loss). In the Holland Tunnel system, this could impact performance of the wireless services that use the cable.

RF coupling and insertion loss testing of the cables in the vicinity of the pilot LED fixtures was completed by NYTP, in conjunction with the Port Authority, in the South Tube of the Holland Tunnel, between the Land Building and River Building, over a period of a few weeks in June and July, 2008. NYTP completed testing using broadband antenna(s), signal generator, and a spectrum analyzer as outlined in the previous section to determine performance. Detailed plots of all tests are provided in Appendix I and II. A summary of the results are provided here:

Table 2.3-1: Measured Values

Cable	Freq, MHz	Cable Specification Insertion Loss (dB/100ft)	Cable Specification Coupling Loss (dB)	Post Test Insertion Loss (dB/100ft)	Post Test Coupling Loss (dB)
RXL7		0.21	66	0.25	62.5
RXL7		0.28	75	0.34	66.4
RXL7		0.53	85	0.70	71.1
RXL7		0.75	84	1.03	69.7
RXL7		0.77	84	1.05	68.5
RCT7		0.64	68	0.66	(n/a)
RCT7		0.66	67	0.67	70.4
RCT7		1.85	52	1.41	60.9
RCT7		1.66	55	1.33	66.6
RCT7		1.59	57	1.34	69.0
RCT7		1.49	59	1.36	74.1
RCT7		1.50	63	1.35	65.9

The cable specification comes from Andrew published data and typically represents measurements per a defined standard on a controlled test range in free space at 2m or 6m separation between the cable and the test antenna. RXL7 and RCT7 are the specific cable types form each series used in the Holland Tunnel. The "7" represents cable diameter of 1-5/8".

The Insertion loss and Coupling loss are independent measurements but make up the overall 'system loss' of the network. Differences between the Specification and Post- test results are expected because the tests in the Holland Tunnel could not directly follow the testing standards used by Andrew[1] The purpose of providing the specification data was to show our tests were comparable to the standard and thus the LED light system has little impact, based on insertion loss, on system performance.

When comparing coupling/system loss to previous tunnel tests performed prior to the LED system being installed, we have to revert back to test data produced during the shelter booth upgrade project in Oct 2002. There is little data that directly correlates to all test frequencies, but specifically for cellular band downlink on RXL7 and PCS band services on the RCT7, Figure 2.3-1 and Figure 2.3-2 show a comparison of the coupling loss performance between the current system near the LED lighting and the test data taken in 2002. As you can see, though the median amplitude differences are expected due to distance measured from the cable and variations in input power levels, the slope and overall shape of the coupling loss performance between the two plots is consistent. Thus, no obvious changes are being caused by the LED lighting.

[1] The IEC standards by which Andrew and other cable manufacturers test their radiating cables is in a free space environment away from metallic or conductive objects. Though the HT testing modeled the IEC standards, the environment is obviously not free space and our separation from the cable varied.

Some other points to be noted about each cable include:

- For RXL7 cable, the interaction with metallic/conducting objects/walls can have a major impact on the individual performances of the insertion loss and/or coupling loss due to the nature of the design of the cable.
- For RCT7 cable, since it is tuned to 'radiate' signal vs creating a wave along its length, the affect of metallic objects/walls on insertion loss isn't as significant as it is with the RXL series cables.
- Objects within proximity to either cable can affect signal radiation properties

2.4 Field Test Data Analysis

Even in a stable environment such as a test range where Andrew and/or other manufacturers' test their cables, the tolerances on the measurements are pretty substantial (insertion loss +/- 10% and coupling loss +/- 5dB for RCT7 and insertion loss 10% and coupling loss +/-10dB for RXL7) in part due to manufacturing tolerances and in part due to environmental changes and test tolerances.

Our primary goal is to compare overall performance from a system loss (coupling loss and insertion losses) perspective, as well as look for any anomalies in the traces as the test vehicle passed through the test fixture region of the cable. For the coupling and insertion losses, tests generally fell within the Andrew tolerance guidelines. So, even with variations in the traces, the net performance is similar (i.e., within reasonable tolerances) for the coupling and insertion loss values before and after the test fixtures were installed. In addition, we saw no visible impact in the traces as the test vehicle passed through the LED fixture location.

Under the test conditions presented, the overall performance of the RADIAX cables following the installation of the pilot fixtures in the near lane of the tunnel does not appear to have any adverse affect on coverage within the tunnels across all frequencies.

3 Test Results – Spurious Emissions

3.1 Test Setup

Typically, tests of this nature would be performed in a lab environment where control external factors could be maintained. Since the LSI light system was already installed prior to starting these tests, the actual tests were made in the tunnel environment, simulating to the best extent possible the configuration that would have been used in the lab. External factors such as vehicle noise, ventilator noise, incoming RF signals, etc., were mitigated to the best extent possible, but obviously have some presence in the results. Due to time constraints, all tests were completed at the nominal distance of one foot from the test source (vs. 1 ft for the uplink and 6 ft for the downlink frequencies) and data was only taken below 1GHz. Calibrated antennas were used at each band.

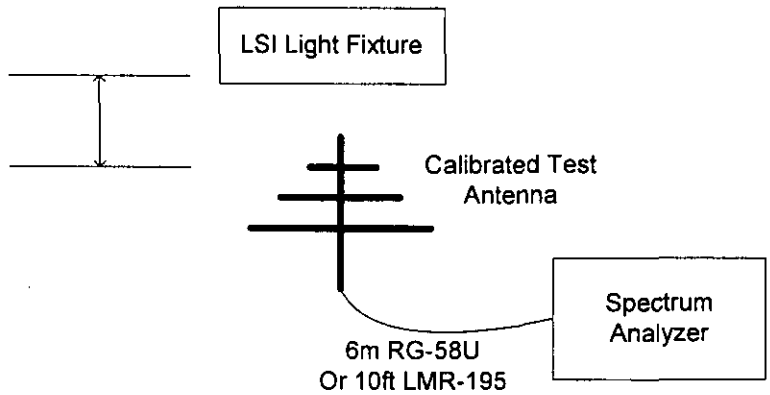

Figure 3.1-1: Test Configuration Overview

3.2 Spurious Test Results

Data in Appendix II demonstrates no spurious signals were detected in the bands of interest to levels as low as -105dBm (the noise floor of the analyzer in the tunnel). A lab environment would likely have allowed measurements to even lower levels in which spurious signals may possibly have been detected, but nothing from these tests indicates a concern or need to halt further installation of these fixtures.

Ex. 4

PORT AUTHORITY OF NEW YORK & NEW JERSEY

HOLLAND TUNNEL

LIGHTING TEST REPORT

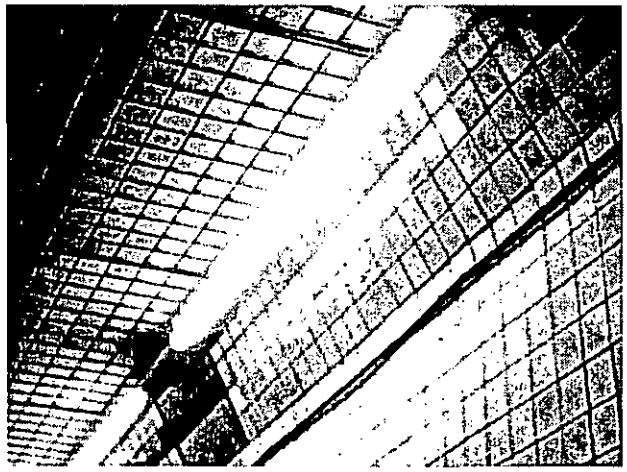

Prepared by the Port Authority Engineering Department

March 17, 2010

Revised May 19, 2010

PART 1 – EXECUTIVE SUMMARY

Engineering was requested by TB&T to perform luminance testing of the prototype Light Emitting Diode (LED) lighting and the existing fluorescent lighting inside the Holland Tunnel. The purpose of the testing was to determine the luminance levels of the fluorescent and LED lights, by LSI and Creative Lighting Solutions, and whether they met the lighting levels for tunnels as recommended by the Illuminating Engineering Society of North America (IESNA) / American National Standards Institute (ANSI) IESNA/ANSI. The report includes tables containing the details of the measured luminance levels for the LED's and fluorescent lights.

The report concludes that refurbishing of the existing fluorescent luminaire with a direct replacement LED lamp (by Creative Lighting) could achieve the daytime lighting levels for tunnels recommended by the IESNA/ANSI and could exceed the lighting levels of the existing fluorescent lights in the Holland Tunnel.

This Report does not address other important LED criteria, e.g. LED and power supply operating life, reliability, color consistency, quality of diodes, and electromagnetic interference. To ensure adequate, quality and longtime LED operation the aforementioned criteria must be included in the LED Lamp Material Specification as part of any Request for Bid.

PART 2 – INVESTIGATION AND ANALYSIS

A. TUNNEL TEST SECTIONS.

Between the hours of 12:00 AM and 4:00 AM on February 24, 2010, March 9, 2010, and May 15, 2010, PA Engineering, with the assistance of TB&T staff, took luminance measurements in the North and South Tubes of the Holland Tunnel of the following interior zone lighting sections:

1. LED lamps manufactured by LSI Industries (South Tube).

2. LED lamps manufactured by Creative Lighting Solutions (South Tube).

3. Existing fluorescent lamps (North and South Tubes).

B. CURRENT IESNA TUNNEL LIGHTING RECOMMENDATIONS

Currently the design standards for tunnel lighting in the US are based on the Illuminating Engineering Society of North America (IESNA) / American National Standards Institute (ANSI) IESNA/ANSI RP-22-2005 Recommended Practice for Tunnel Lighting.

For this test it is assumed that LED lighting would be considered for just the interior lighting zone and not the threshold lighting zones at the New Jersey and New York entrances of the tunnel. Currently the entrance lighting consists of high-pressure sodium luminaries and is used during the daytime to help the approaching drivers see obstacles immediately inside the tunnel.

Table 1: RP-22-2005 - Recommended Daytime Interior Zone Average Pavement Luminance in candela per square meter (cd/m^2)			
Traffic Speed	**Traffic Flow**		
	Low $\leq$ **2,400 AADT**	**Medium** > **2,400 AADT** < **24,000 AADT**	**Heavy** $\geq$ **24000 AADT**
100 km/h (60 mph)	6	8	10
80 km/h (50 mph)	4	6	8
60 km/h (40 mph)	3	4	6

"AADT" – Annual Average Daily Traffic

Recommended interior lighting levels for the Holland tunnel would include a daytime lighting level of 5 cd/m^2 obtained by extrapolation based on a posted speed of 35 mph and traffic volumes greater than 24,000 annual average daily traffic (AADT). At night this level could be reduced to 2.5 cd/m^2. The current light levels in the tunnel are based on older tunnel lighting standards and therefore less than current recommendations.

Other requirements of RP-22-2005 for tunnel lighting systems is that the walls of the tunnel, up to 3 m (10 ft.) above the roadway shoulder, should have at least an average luminance of one-third of the average roadway level. Greater luminance, up to the full pavement luminance, is desirable if a wall forms a major portion of the viewable background.

Also the uniformity ratios within the tunnel should be 2 to 1, average-to-minimum; and 3.5 to 1 maximum-to-minimum. The allowable glare generated by the lighting system should be limited to a veiling luminance ratio less than 0.3 and as defined in IESNA/ANSI RP-8.

C. MEASURED LIGHT LEVELS IN THE TUNNEL

Measurements for the tunnel were taken with a Minolta Luminance LS-100 Meter installed on a tripod in accordance with LM-71-96 Reaffirmed 2001 "IESNA Approved Guide for Photometric Measurement of Tunnel Lighting Installations". Lighting levels were determined for the pavement and walls for all lighting sections. The results are depicted in the following tables:

Photometric Measurement Table PL-F-R.
Lighting: **LSI LED**
Location: Far Side Lane, Road Surface

Luminance - cd/m2

Point Location	Near Centerline	Middle	Near Wall
Front Row	4.229	2.728	2.66
Rear Row	3.426	4.639	3.646
Average (5)*	**3.555**		
Ave/Min (2)**	1.336		
Max/Min (3.5)**	1.744		

Photometric Measurement Table PL-F-W.
Lighting: **LSI LED**
Location: Far Side Lane, Wall Surface

Luminance - cd/m2

Point Location	3 FT	6 FT	9 FT
Front Row	9.445	5.335	20.79
Rear Row	4.704	7.987	15.06
Average (1.7)*	**10.554**		
Ave/Min (2)**	2.244		
Max/Min (3.5)**	4.42		

* - Minimum daytime level recommended by RP-22

** - Maximum uniformity rate recommended by RP-22

Photometric Measurement Table LR-F-R (a).
Lighting: **Creative Lighting LED (initial)**
Location: Far Side Lane, Road Surface

	Luminance - cd/m2		
Point Location	Near Centerline	Middle	Near Wall
Front Row	3.2	2.511	6.071
Rear Row	2.899	3.023	6.715
Average Initial	4.07		
In-Service (5)*	**3.66**		
Ave/Min (2)**	1.621		
Max/Min (3.5)**	2.674		

Photometric Measurement Table LR-F-W(a).
Lighting: **Creative Lighting LED (initial)**
Location: Far Side Lane, Wall Surface

	Luminance - cd/m2		
Point Location	3 FT	6 FT	9 FT
Front Row	4.519	8.035	12.6
Rear Row	4.31	8.937	13.42
Average (1.7)*	**8.637**		
Ave/Min (2)**	2.004		
Max/Min (3.5)**	3.114		

* - Minimum daytime level recommended by RP-22

** - Maximum uniformity rate recommended by RP-22

Photometric Measurement Table F-F-R(b).
Lighting: **Creative Lighting LED (upgraded)**
Location: Far Side Lane, Road Surface

Luminance - cd/m2

Point Location	Near Centerline	Middle	Near Wall
Front Row	6.496	5.905	6,166
Rear Row	7.067	5.683	6.444
Average Initial	6.294		
In-Service (5)*	**5.665**		
Ave/Min (2)**	1.108		
Max/Min (3.5)**	1.244		

Photometric Measurement Table F-F-W(b).
Lighting: **Creative Lighting LED (upgraded)**
Location: Far Side Lane, Wall Surface

Luminance - cd/m2

Point Location	3 FT	6 FT	9 FT
Front Row	9.299	12.87	15.65
Rear Row	10.11	11.96	18.67
Average (1.7)*	**13.093**		
Ave/Min (2)**	1.408		
Max/Min (3.5)**	2.008		

* - Minimum daytime level recommended by RP-22

** - Maximum uniformity rate recommended by RP-22

Photometric Measurement Table F-F-R.

Lighting: **Existing Fluorescent (recently relamped)**

Location: Far Side Lane, Road Surface

Luminance - cd/m2

Point Location	Near Centerline	Middle	Near Wall
Front Row	4.669	4.155	6.668
Rear Row	4.424	4.524	7.668
Average Initial	5.351		
In-Service (5)*	**4.816**		
Ave/Min (2)**	1.288		
Max/Min (3.5)**	1.845		

Photometric Measurement Table F-F-W.

Lighting: **Existing Fluorescent (recently relamped)**

Location: Far Side Lane, Wall Surface

Luminance - cd/m2

Point Location	3 FT	6 FT	9 FT
Front Row	5.206	12.74	15.3
Rear Row	5.698	11.37	30.22
Average (1.7)*	**13.422**		
Ave/Min (2)**	2.578		
Max/Min (3.5)**	5.805		

* - Minimum daytime level recommended by RP-22

** - Maximum uniformity rate recommended by RP-22

The levels measured for the Creative Lighting LED lamps are considered initial levels (newly installed). The levels recommended in RP-22 are maintained (in-service) values. This is the light level after the lamps have depreciated over some time, therefore in order to adjust the measured Creative Lighting LED lamp and the newly replaced fluorescent lamp light levels Engineering applied a **10%** depreciation factor to the average value obtained by the measurements:

Creative Lighting LED lamp (initial)	4.07 cd/m2 x 0.9 = 3.663 cd/m2
Creative Lighting LED lamp (upgraded)	6.294 cd/m2 x 0.9 = 5.665 cd/m2
Existing Fluorescent lamps (new lamps)	5.351 cd/m2 x 0.9 = 4.816 cd/m2

Additional measurements of the fluorescent lighting were performed on March 9, 2010 and May 14, 2010 to verify the maintained luminance level of the existing fluorescent lamps (see Section D, this Report.)

The following table demonstrates the comparison of average measured roadway values and current RP-22 recommendations:

Comparison of Roadway Luminance Values and Lighting Uniformity

	Average Roadway Luminance, cd/m2	Uniformity Ave/ Min	Uniformity Max/ Min	Wattage per Linear Foot
RP-22 Recommendations	≥5	<2	<3.5	N/A
LSI LED	3.555	1.336	1.744	9.5**
Creative Lighting LED (initial)*	3.663	1.621	2.674	3.1
Creative Lighting LED (upgraded)*	5.665	1.108	1.244	3.75
Fluorescent*	4.816	1.288	1.845	8.5

* - 10% reduction applied to reflect Lamp Lumen Depreciation.

** - Measured at the time of prototype installation; manufacturer promised to reduce power consumption to 7 W/LF.

RP-22 Recommended Nighttime Interior Level is 2.5 cd/m^2.

D. TESTING OF THE FLUORESCENT LIGHTING

In order to verify the maintained (in-service) luminance value of the existing fluorescent lighting system, between the hours of 12:00 AM and 4:00 AM on March 9, 2010 and May 14, 2010, PA Engineering, with the assistance of TB&T staff, took luminance measurements in the North and South Tubes of the Holland Tunnel of the following interior zone fluorescent lighting sections:

1. North Tube, Station 78-00, Far and Near Side Lane;
2. North Tube, Station 58-00, Far and Near Side Lane;
3. South Tube, Station 48-00, Far and Near Side Lane;
4. South Tube, Station 33-00, Far and Near Side Lane.

The measurement results are depicted in the following tables:

Photometric Measurement Table N-F-R-78(a)
Lighting: **Fluorescent**
Location: North Tube, Far Side Lane, Road Surface, Station 78+00
Conditions: **Rechecked on May 17, 2010 under regular conditions**

Luminance - cd/m2

Point Location	Near Centerline	Middle	Near Wall
Front Row	5.221	4.225	4.957
Rear Row	4.839	4.006	4.784
Average (5)*	**4.672**		
Ave/Min (2)**	1.167		
Max/Min (3.5)**	1.303		

Photometric Measurement Table N-N-R-78(b).
Lighting: **Fluorescent**
Location: North Tube, Near Side Lane, Road Surface, Station 78+00
Conditions: Walls were power washed the night of measurements; roadway was wet.

Luminance - cd/m2

Point Location	Near Centerline	Middle	Near Wall
Front Row	6.339	3.371	3.427
Rear Row	7.659	3.666	3.656
Average (5)*	**4.686**		
Ave/Min (2)**	1.39		
Max/Min (3.5)**	2.272		

Photometric Measurement Table N-F-R-58.
Lighting: **Fluorescent**
Location: North Tube, Far Side Lane, Road Surface, Station 58+00
Conditions: Walls were power washed the night of measurements; Roadway was wet.

Luminance - cd/m2

Point Location	Near Centerline	Middle	Near Wall
Front Row	3.85	3.839	6.446
Rear Row	3.755	3.977	7.293
Average (5)*	**4.86**		
Ave/Min (2)**	1.294		
Max/Min (3.5)**	1.942		

Photometric Measurement Table N-N-R-58.
Lighting: **Fluorescent**

Location: North Tube, Near Side Lane, Road Surface, Station 58+00

Conditions: Walls were power washed the night of measurements; roadway was wet.

Luminance - cd/m2

Point Location	Near Centerline	Middle	Near Wall
Front Row	3.492	3.071	4.021
Rear Row	3.562	3.099	3.302
Average (5)*	**3.425**		
Ave/Min (2)**	1.115		
Max/Min (3.5)**	1.309		

Photometric Measurement Table S-F-R-48.

Lighting: **Fluorescent**

Location: South Tube, Far Side Lane, Road Surface, Station 48+00
Conditions: Walls were power washed the night of measurements

Luminance - cd/m2

Point Location	Near Centerline	Middle	Near Wall
Front Row	5.303	4.01	4.676
Rear Row	5.373	4.295	4.739
Average (5)*	**4.733**		
Ave/Min (2)**	1.18		
Max/Min (3.5)**	1.34		

Photometric Measurement Table S-N-R-48.

Lighting: **Fluorescent**

Location: South Tube, Near Side Lane, Road Surface, Station 48+00

Conditions: Walls were power washed the night of measurements

Luminance - cd/m2

Point Location	Near Centerline	Middle	Near Wall
Front Row	4.518	4.606	3.995
Rear Row	5.87	4.47	4.115
Average (5)*	**4.596**		
Ave/Min (2)**	1.15		
Max/Min (3.5)**	1.469		

Photometric Measurement Table S-F-R-33.

Lighting: **Fluorescent**

Location: South Tube, Far Side Lane, Road Surface, Station 33+00

Conditions: Walls were power washed the night of measurements

Luminance - cd/m2

Point Location	Near Centerline	Middle	Near Wall
Front Row	6.118	4.888	5.163
Rear Row	6.224	4.915	6.387
Average (5)*	**5.616**		
Ave/Min (2)**	1.149		
Max/Min (3.5)**	1.307		

Photometric Measurement Table S-N-R-33.

Lighting: **Fluorescent**

Location: South Tube, Near Side Lane, Road Surface, Station 33+00

Conditions: Walls were power washed the night of measurements

Luminance - cd/m2

Point Location	Near Centerline	Middle	Near Wall
Front Row	6.937	4.474	3.937
Rear Row	5.937	4.767	4.773
Average (5)*	**5.138**		
Ave/Min (2)**	1.305		
Max/Min (3.5)**	1.762		

* - Minimum daytime level recommended by RP-22

** - Maximum uniformity rate recommended by RP-22

Average Luminance values from the measurement tables were included in the following table:

No.	Tube	Lane	Station	Luminance, cd/m2	Comments
N-F-R-78	North	Far Side	78+00	4.672	
N-N-R-78	North	Near Side	78+00	4.686	
N-F-R-58	North	Far Side	58+00	4.86	
N-N-R-58	North	Near Side	58+00	3.425	
S-F-R-48	South	Far Side	48+00	4.733	
S-N-R-48	South	Near Side	48+00	4.596	
S-F-R-33	South	Far Side	33+00	5.616	
S-N-R-33	South	Near Side	33+00	5.138	
Average Roadway Luminance				**4.715**	

E. CONCLUSION

Based on the table values, all test sections would meet the nighttime interior requirements of the current RP-22-2005 but **only the <u>upgraded</u>** Creative Lighting LED lamps **meet** the current recommended daytime interior light level.

F. RECOMMENDATIONS

The Report indicates that the IESNA recommended luminance level is achievable by refurbishing of the existing fluorescent luminaires with direct replacement LED lamps. It does not address other important LED criteria, including the following:

- LED and power supply operating life;
- LED Reliability;
- Color consistency;
- Color temperature and Color Rendering Index (CRI);
- Allowable Lamp Lumen Depreciation;
- Allowable LED temperature;
- Electromagnetic interference;
- Adequate light distribution and glare control.

To ensure adequate, quality and longtime LED operation the aforementioned criteria must be incorporated in the LED Lamp Material Specification as part of Request for Bid.

Port Authority of New York & New Jersey.

Holland Tunnel

Lighting Test Report

Prepared by PA Engineering

August 31, 2011

A. Tunnel Test Sections.

On Tuesday, August 30, 2011 at 2:15 AM PA Engineering, PMD, and Facility staff took luminance measurements in the Holland Tunnel South Tube of the following interior zone lighting section:

LED retrofit tube light by Turtle and Hughes, direct replacement of the existing fluorescent lamps in August 2011.

The measurements were taken to perform pre-production testing of the LED lamps as indicated in the PA Specification 16555C, Section 3.02 "Pre-Production Testing."

B. Current Tunnel Lighting Recommendations

Currently the design standards for tunnel lighting in the US are based on the Illuminating Engineering Society of North America (IESNA) / American National Standards Institute (ANSI) IESNA/ANSI RP-22-2005 Recommended Practice for Tunnel Lighting.

For this test it is assumed that an LED retrofit would be considered for just the interior lighting system and not the elevated threshold lighting system at the New Jersey entrances of the tunnel which consists of primarily high pressure sodium luminaires and used during the daytime to help the approaching drivers see obstacles immediately inside the tunnel.

RP-22 Table 7: Recommended Daytime Interior Zone Average Pavement Luminance in candela per square meter (cd/m^2)

Traffic Speed	Traffic Flow		
	Low ≤ 2,400 AADT	Medium > 2,400 AADT < 24,000 AADT	Heavy ≥ 24000 AADT
100 km/h (60 mph)	6	8	10
80 km/h (50 mph)	4	6	8
60 km/h (40 mph)	3	4	6

"AADT" – Annual Average Daily Traffic

Recommended interior lighting levels for Holland tunnel would include daytime lighting of 5 cd/m^2 obtained by extrapolation based on a posted speed of 35 mph and traffic volumes greater than 24,000 annual average daily traffic (AADT). At night this level could be reduced to 2.5 cd/m^2. The current light levels in the tunnel are based on older tunnel lighting standards and therefore less than current recommendations.

Other requirements of RP-22 for tunnel lighting systems is that the walls of the tunnel, up to 3 m (10 ft.) above the roadway shoulder, should have at least an average luminance of one-third of the average roadway level. Greater luminance, up to the full pavement luminance, is desirable if a wall forms a major portion of the viewable background. Also the uniformity ratios within the tunnel should be 2 to 1, average-to-minimum; and 3.5 to 1 maximum-to-minimum. The allowable glare generated

by the lighting system should be limited to a veiling luminance ratio less than 0.3 and as defined in IESNA/ANSI RP-8.

C. Measured Light Levels in the Tunnel

Measurements for the tunnel were taken with a Minolta Luminance LS-100 Meter installed on a tripod in accordance with LM-71-96 Reaffirmed 2001 "IESNA Approved Guide for Photometric Measurement of Tunnel Lighting Installations. Lighting levels were determined for the pavement and walls. The results are depicted in the following tables:

Photometric Measurement Table PL-N-R.
Lighting: **Pre-Production LED.**
Location: Near Side Lane, Road Surface.

	Luminance - cd/m2		
Point Location	Near Centerline	Middle	Near Wall
Front Row	5.25	5.90	8.20
Rear Row	5.71	5.65	7.10
Average (5)*	**6.30**		
Ave/Min (2)**	1.20		
Max/Min (3.5)**	1.56		

Photometric Measurement Table PL-F-R.
Lighting: **Pre-Production LED.**
Location: Far Side Lane, Road Surface.

	Luminance - cd/m2		
Point Location	Near Centerline	Middle	Near Wall
Front Row	6.80	5.30	8.60
Rear Row	9.00	5.20	8.35
Average (5)*	7.21		
Ave/Min (2)**	1.39		
Max/Min (3.5)**	1.73		

Photometric Measurement Table PL-F-W.
Lighting: **Pre-Production LED.**
Location: Far Side Lane, Wall Surface.

Luminance - cd/m2

Point Location	3 FT	6 FT	9 FT
Front Row	11.00	18.02	23.05
Rear Row	9.50	17.5	21.50
Average (1.7)*	**16.76**		
Ave/Min (2)**	1.76		
Max/Min (3.5)**	2.43		

* - Minimum daytime level recommended by RP-22

The following table demonstrates the comparison of average measured roadway values and RP-22 recommendations:

Comparison of Roadway Luminance Values and Lighting Uniformity

	Average Roadway Luminance, cd/m2	Uniformity Ave/ Min	Uniformity Max/ Min	Wattage per Linear Foot
RP-22 Recommendations	≥5	<2	<3.5	N/A
Pre-Production LED	6.755*	1.39	1.73	5
Existing Fluorescent*	4.816	1.288	1.845	9.6**

* - Average of near and far lane measurements.
** - With magnetic ballast.

D. Conclusion

Based on the table values, the Pre-Production LED lighting test section meets the daytime interior requirements of the RP-22 and exceeds the existing fluorescent lighting performance with approximate energy saving of 4.6 W per linear foot of lamp.

RCC CONSULTANTS, INC.

LED LAB TEST PROCEDURES

Using MIL-STD-461E and IEC/EU EN 61000-4-3

Andy Alleshouse

8/12/2011

RE102 - CE102 and IEC/EU EN 61000-4-3 standards testing applied to one eight foot florescent lamp, one newly developed eight foot LED lamp and one newly developed six foot LED lamp.

Table of Contents

1. Purpose of lab test. 4
2. Modifications to this document. 4
3. Description of Equipment Under Test (EUT) 4
   a. LED Lamp Construction 4
   b. LED Lamp Electrical 4
   c. POWER SUPPLY 4
   d. ELECTROMAGNETIC COMPATIBILITY & ELECTROMAGNETIC INTERFERENCE (EMC / EMI): 4
      iv. Picture of LED lamp in outer fixture without outer glass tube. 5
      e. Picture of the right end of previous generation LED lamp showing the power connection. 7
      f. Picture of Left end of previous generation LED lamp showing the power connection. 7
      g. Picture of lamp installed in the tunnel 8
      h. Drawing 1 of lamp fixtures 9
      i. Drawing 2 of lamp fixtures (power end) 10
      j. Drawing 3 of lamp fixtures (non-powered end) 12
   4. Material to be supplied by customer. 13
   5. Material to be supplied by Lab. 13
6. Test to be preformed 13
   a. Time frame. 13
   b. Supporting Documents 13
   c. MIL-STD-461E Tests. 13
   ii. RE102, radiated emissions, electric field, 10 kHz to 18 GHz. 13
   2. RE102 applicability. 13
   3. RE102 limits. 14
   4. Test equipment, set up, test procedure, and data presentation. 14
vi. CE102, conducted emissions, power leads, 10 kHz to 10 MHz. 14
   1. Purpose. 14
   2. CE102 applicability. 14
   3. CE102 limits. 14
   4. Test equipment, set up, test procedure, and data presentation. 14
vii. Modified RE102, radiated emissions, electric field, per table vii-1. 14
   1. Modified RE102 Purpose. 14
   2. Modified RE102 applicability. 14
   3. Modified RE102 limits. 15
   Test equipment, set up, test procedure, and data presentation. 15

i. IEC/EU EN 61000-4-3 Radiated Immunity testing at a 10V/M test 15
1. IEC/EU EN 61000-4-3 Purpose. 15
2. IEC/EU EN 61000-4-3 applicability. 16
3. IEC/EU EN 61000-4-3 limits. 16
4. Test equipment, set up, test procedure, and data presentation. 16
Follow the requirements as specified in attachment 10. 16
7. Attachments. 16
c. Attachment 3 16
i. MIL-STD-461F-RE102.pdf 16
i. Attachment 9 16
i. MIL-STD-461F-CE102 17
j. Attachment 10 17
i. IEC EU 61000-4-3 radiated immunity testing standards. 17
k. Attachment 11 17
i. Modifications to Led lab test procedures 17
l. Attachment 12 17
i. Retlif sample CE102 test data 17

1. **Purpose of lab test.**
   To determine if the recently submitted 6 ft and 8 ft LED lights will interfere with wireless communications within the Holland Tunnel. The wireless communications fall within the AM, FM, VHF, 800 MHz, and UHF frequency bands.
2. **Modifications to this document.**
   a. See Attachment 11

3. **Description of Equipment Under Test (EUT)**
   Light emitting diode (LED) lamp to replace existing 96-inch (GE Model 15358, F96/T12 75W, Single-Pin Base) and 72- inch (GE Model 13743, F72/T12, 55W, Single-Pin Base) fluorescent tubular lamps used for providing tunnel roadway illumination. The LED lamps will be installed in existing light fixtures using the existing sockets and will be enclosed inside casketed tempered glass tubes.

   a. **LED Lamp Construction**
      i. LED lamps shall be 96-inches and 72-inches in length.
      ii. LED lamps shall be T12 or T8 in diameter.
      iii. LED lamp shall mount in existing fluorescent single pin connection.
      iv. Total LED lamp weight shall not exceed three pounds.

   b. **LED Lamp Electrical**
      i. The LED lamps shall be rated for 110-277-volt operation with 1 phase wiring. The LED lamp shall be designed to keep the wattage constant for the L80 life of the lamp while allowing the light levels to diminish to no less than 20% over 5 years.
      ii. Lamp power consumption shall not exceed 5.0 watts per foot. (Measured at a 40 degree Centigrade ambient temperature and 277 Volts).
      iii. Total harmonic distortion induced into an AC power line by a LED lamp.

   c. **POWER SUPPLY**
      i. Power supply must be integral to the LED lamp.
      ii. Operating life of power supply shall be a minimum of 50,000 hours.
      iii. Power supply shall be designed to operate from a supply voltage ranging from 110 Volts to 277 Volts AC + 10 percent, 60Hz.
      iv. The power supply shall provide a power factor of 0.90 or greater.

   d. **ELECTROMAGNETIC COMPATIBILITY & ELECTROMAGNETIC INTERFERENCE (EMC / EMI):**
      i. The lamps will be subject to the following existing environment:
         1. Radiax™ radiating antenna cables are in close proximity to the existing lighting fixtures.
         2. The distance between various Radiax™ cables and the existing lighting fixtures range from one-foot to less than one-inch. (see photo 2. i. below)
      ii. The LED lamp assembly, including electrical and electronics components, shall not present harmful interference to the existing radio systems operating in the AM, FM, Personal Communications Service (PCS), Advance Wireless Service (AWS), VHF, UHF, and 800 MHz radio frequencies bands.
      iii. The LED lamp assembly, including electrical and electronics components, shall not experience any degradation in performance due to operation in the existing environment.

iv. **Picture of LED lamp in outer fixture without outer glass tube. Note; This is the power feed end of the outer fixture.**

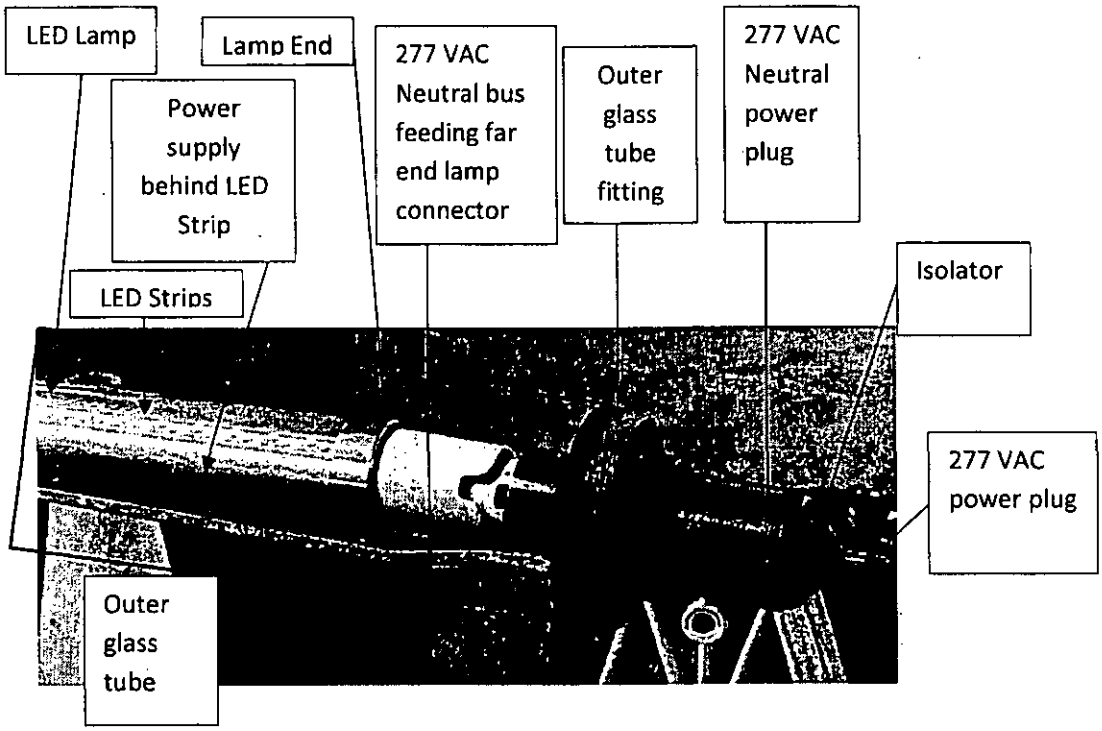

Drawing showing typical end power connection of LED lamp

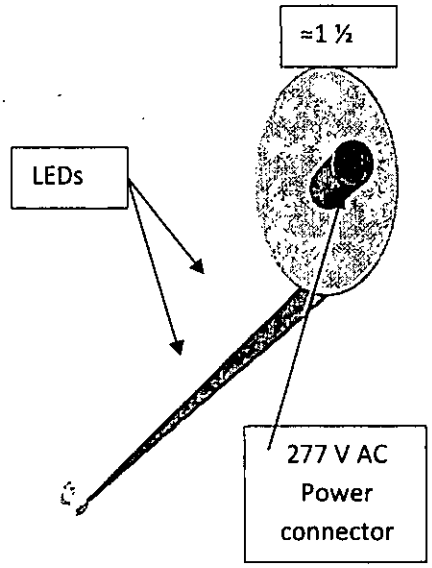

e. **Picture of the right end of previous generation LED lamp showing the power connection.**
   i. **Note; labeling on this tube should not be considered accurate. The light to be tested is next generation.**

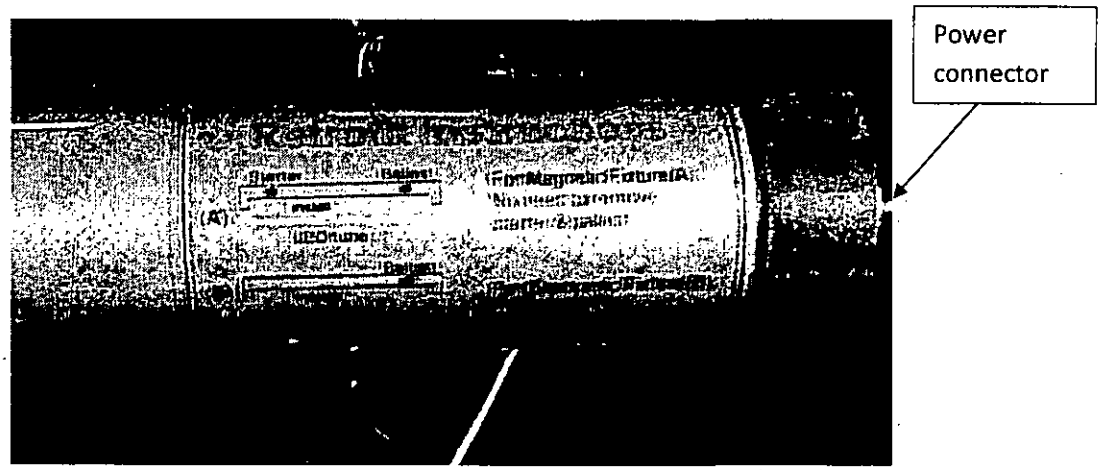

f. **Picture of Left end of previous generation LED lamp showing the power connection.**
   i. **Note; labeling on this tube should not be considered accurate. The light to be tested is next generation.**

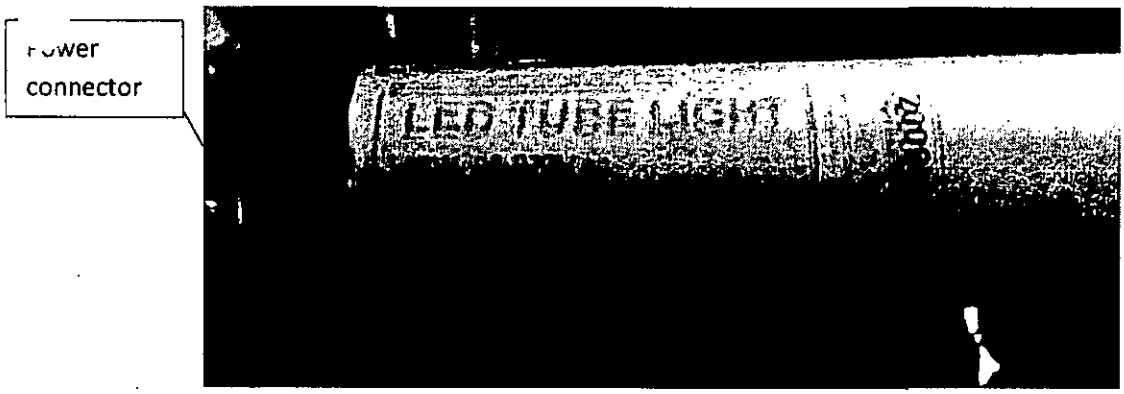

g. **Picture of lamp installed in the tunnel**

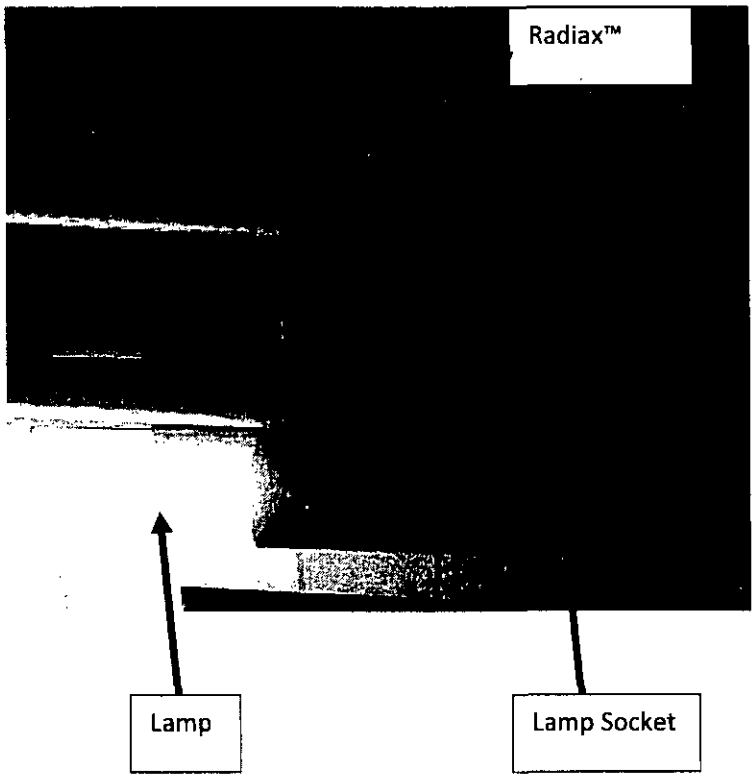

h. Drawing 1 of lamp fixtures

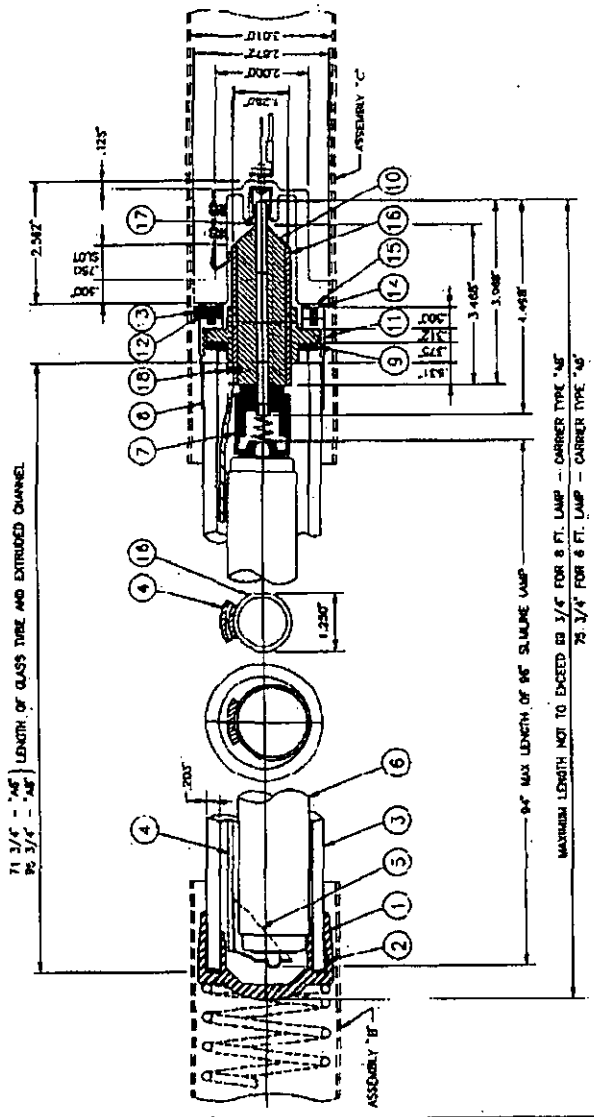

Figure 3.42 Fluorescent Fixture Assembly "A" Details

i. **Drawing 2 of lamp fixtures (power end)**

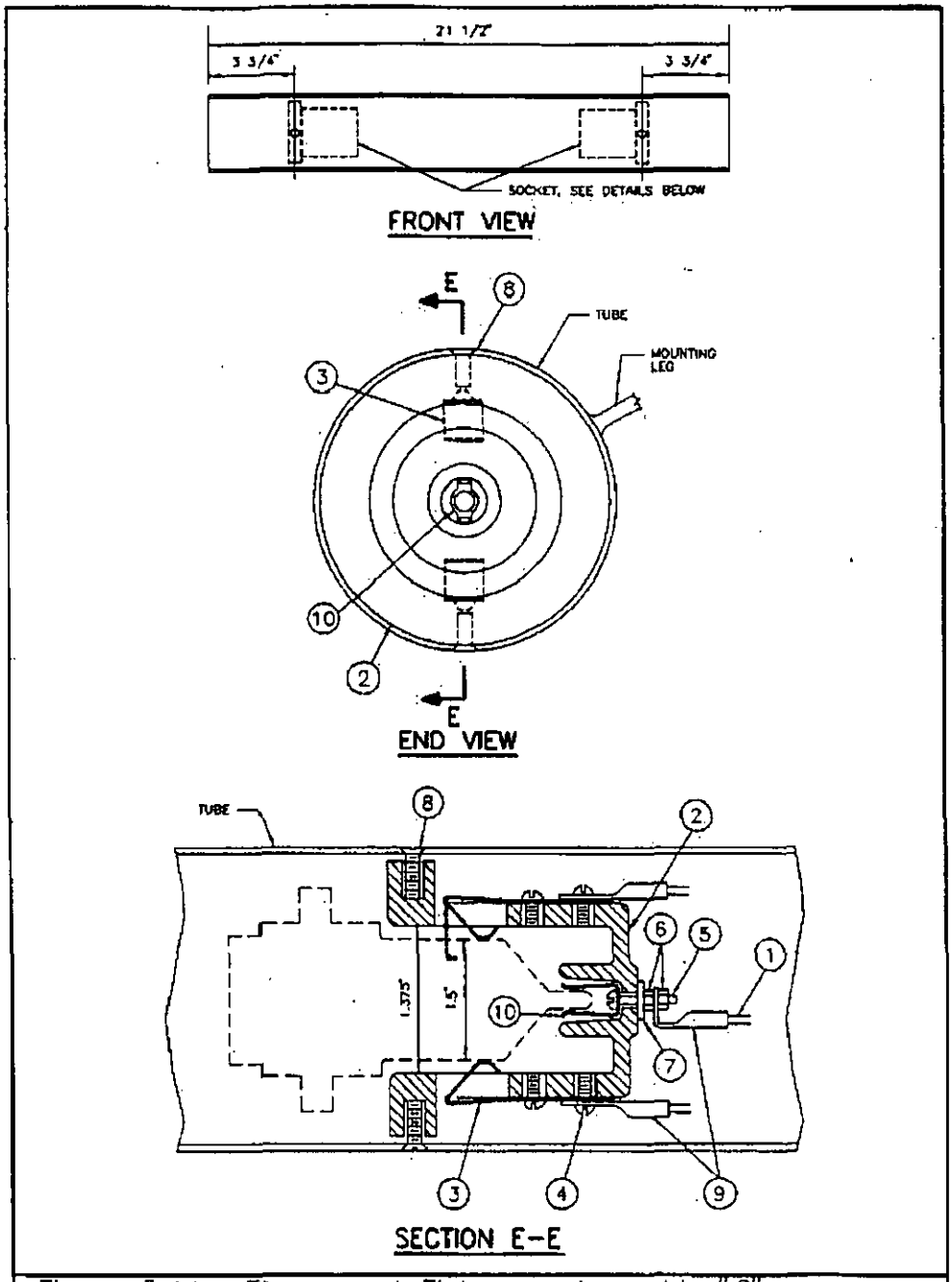

Figure 3.44 Fluorescent Fixture – Assembly "C" Details

j. **Drawing 3 of lamp fixtures (non-powered end)**

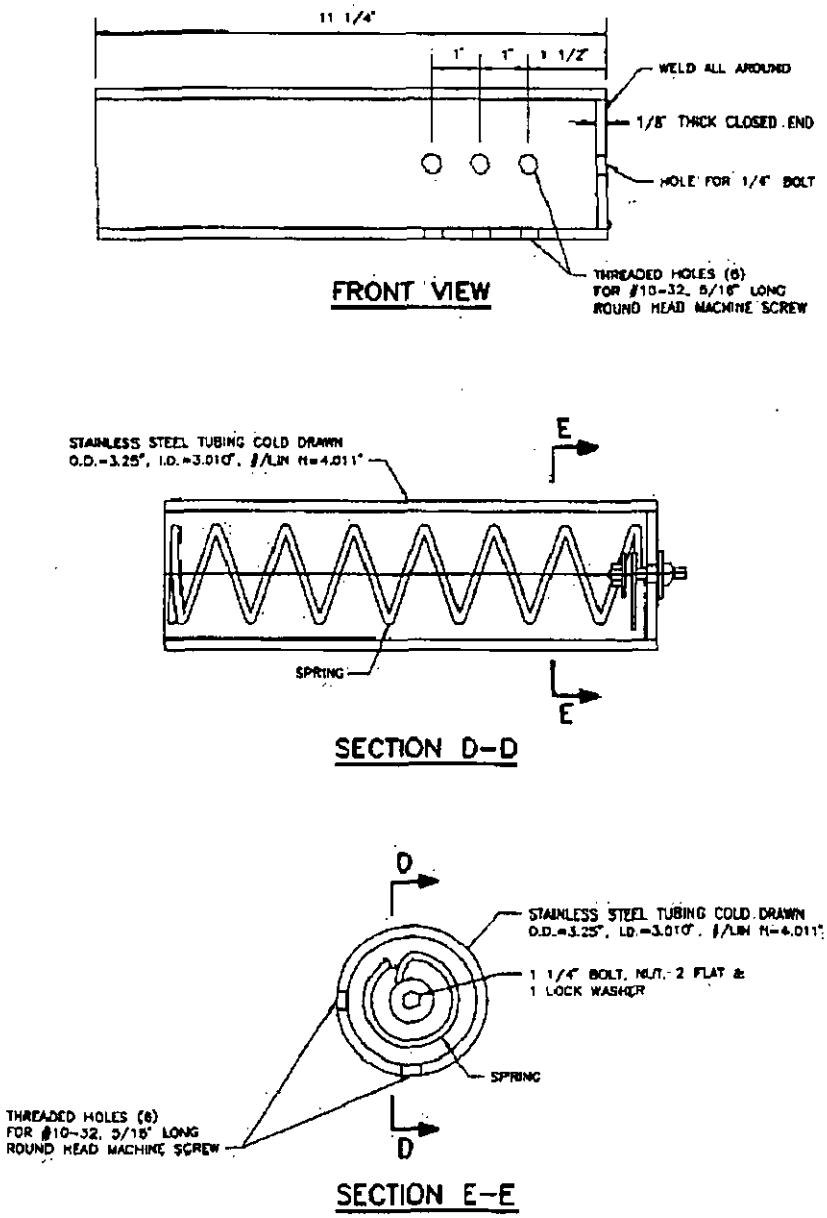

Figure 3.43 Fluorescent Fixture - Assembly "B" Details

4. **Material to be supplied by customer.**
   a. One 6' LED Lamp with outer glass enclosure.
   b. One 8' LED lamp with outer glass enclosure.
   c. One power end mid section lamp fixture holder assembly.
   d. One non-powered end mid section lamp fixture holder assembly.
   e. One working 8' florescent lamp with outer glass enclosure.
   f. One working 277 volt florescent lamp ballast.
   g. Reusable shipping carton/s

5. **Material to be supplied by Lab.**
   a. Lab test environment as described in MIL-STD-461F and IEC/EU EN 61000-4-3.
   b. 277 Volts 60 Hz single phase AC power. ETU Shall be tested using 277 VAC single phase power.
   c. AC power leads.
   d. Necessary material to mount fixtures.
   e. Line Impedance Stabilization Network (LISN) if required.
   f. Lab test equipment as specified MIL-STD-461F.
   g. Description of test performed and report documentation.
   h. Low noise amplifiers and other accessories necessary to conduct tests.
   i. Metal electrical box to house florescent 277 volt ballast.

6. **Test to be preformed.**

   a. **Time frame.**
      i. Material delivery to the lab must be on or before August 19, 2011
      ii. Test start date August 22, 2011
      iii. Duration of testing. All tests including an initial draft report of the test results must be completed within a 30 day period.

   b. **Supporting Documents**
      i. Reference attachments 3, 9, and 10, for proper test setup, level and frequency measurements, unless otherwise indicated below.

   c. **MIL-STD-461E Tests.**

      i. **This section deliberately left blank**

      ii. **RE102, radiated emissions, electric field, 10 kHz to 18 GHz.**
         1. **RE102 Purpose.**
            This test procedure applies to all three lamps and is used to verify that electric field emissions from the EUT and its associated cabling do not exceed specified requirements. **See Attachment 3**

         2. **RE102 applicability.**
            This requirement is applicable for radiated emissions from equipment and subsystem enclosures, all interconnecting cables, and antennas designed to be permanently mounted to EUTs (receivers and transmitters in standby mode). The requirement does

not apply at the transmitter fundamental frequencies and the necessary occupied bandwidth of the signal. The requirement is applicable as follows:

a. Ground 100 KHz to 18 GHz as per attachment 3. FIGURE RE102-4. RE102 limit for ground applications.

Testing is required up to 1 GHz or 10 times the highest intentionally generated frequency within the EUT, whichever is greater. Measurements beyond 18 GHz are not required.

3. **RE102 limits.**
   Electric field emissions shall not be radiated in excess of those shown in Figure RE102-4. Attachment 3
   Above 30 MHz, the limits shall be met for both horizontally and vertically polarized fields.

4. **Test equipment, set up, test procedure, and data presentation.**
   Follow the requirements as specified in attachment 3

iii. This section deliberately left blank

iv. This section deliberately left blank

v. (This section deliberately left blank

vi. CE102, conducted emissions, power leads, 10 kHz to 10 MHz.

1. **Purpose.**
   This test procedure is used to verify that electromagnetic emissions from the eight foot LED lamp do not exceed the specified requirements for power input leads, including returns. **See Attachment 9**

2. **CE102 applicability.**
   This requirement is applicable from 10 kHz to 10 MHz for all power leads, including returns, which obtain power from other sources not part of the EUT.

3. **CE102 limits.**
   Conducted emissions on power leads shall not exceed the applicable values shown in Figure CE102-1 attachment 9.

4. **Test equipment, set up, test procedure, and data presentation.**
   Follow the requirements as specified in attachment 9

vii. Modified RE102, radiated emissions, electric field, per table vii-1.

1. **Modified RE102 Purpose.**
   This test procedure is to achieve "best effort" within the 30 day testing window to record and compare the LED EUT and the Floresent EUT high sensitivity level measurements. See Attachment 3 for general setup and test procedures, See table vii-1 below for frequencies to be scanned.

2. **Modified RE102 applicability.**
   This requirement is applicable for measured radiated emissions from the 8 ft LED lamp and the 8 ft florescent lamp with 277 volt ballast. All other interconnecting cables and fixtures will remain the same.

This test will consist of radiated emissions scans in accordance with test method RE102 with the exception that the scans will be done only for the frequency ranges specified in table vii-1 and for the test duration of not more than two hours per frequency range. One set of scans will be performed on an 8 foot LED light assembly and one set of scans will be performed on an 8 foot fluorescent light and ballast assembly. Each frequency range scan will be based on a 2 hour scan time resulting in a "best effort" sensitivity level.
In some cases multiple scans per band will be required to address the beam width of the antenna used. The time needed to set up, reset, and/or replace the test equipment is not part of the scan time.

3. **Modified RE102 limits.**

Table vii-1

High Sensitivity Test Frequency Table						
Start Freq in MHz	**Stop Freq in MHz**	**Freq Range in MHz**	**Sweep time KHz /second**	**Scan time**	**Band**	**Users**
						Public safety - High Band
						Public safety - UHF Public safety - T-Band
			≈ 2.5	≈ 2 hours	700 (XII/XVII)	Lower 700 MHz A-B-C blocks (UL)
			≈ 1.5	≈ 2 hours	700 (XIII)	Upper 700 MHz C block (UL)
						Public safety (UL)
			≈ 5.97	≈ 2 hours	800, A & B Block A" & A' Block B' Block	NPSPAC, ILT, ESMR (UL) Cellular (UL)
			≈ 6.25	≈ 2 hours	AWS	AWS (UL)
			≈ 9.0	≈ 2 hours	PCS-A, B, C, D, E, F, & X	PCS-A, B, C, D, E, F, & X (UL)

4. **Test equipment, set up, test procedure, and data presentation.**
Using the modified limits specified in Table vii-1 above, follow the requirements as specified in attachment 3.

d. IEC/EU EN Tests,

i. IEC/EU EN 61000-4-3 Radiated Immunity testing at a 10V/M test

1. **IEC/EU EN 61000-4-3 Purpose.**
This test procedure is used to verify that the eight foot LED's immunity to conducted disturbances induced by radio frequency fields. IEC/EU EN 61000-4-3 was chosen for its practical application to the intended use of the LED lamps.
Particular considerations are devoted to the protection against radio-frequency emissions from digital radiotelephones and other RF emitting devices within the tunnel.

Note; MIL STD procedures take into consideration combat conditions that could include RFI/EMI emission levels that could be generated from nuclear weapons and/or other devices designed to deliberately disrupt the operation of the EUT. Thus these procedures were rejected due to the impractical high level emission requirements and the destructive nature of the tests.

2. **IEC/EU EN 61000-4-3 applicability.**
   This requirement is applicable for test levels and frequency ranges specified in section 5 and in annex E. of Attachment 9 IEC EU 61000-4-3 radiated immunity testing.
   Specifically; If the EUT is to be installed at only a few sites, then an inspection of local RF sources will enable a calculation of field strengths likely to be encountered. If the powers of the sources are not known, it may be possible to measure the actual field strengths at the location(s) concerned.

3. **IEC/EU EN 61000-4-3 limits.**
   RCC conducted preliminary field strength measurements within the tunnel and measured no signal levels above -40 dBm.

   Therefore 10V/M test level will be used for testing.
   IEC/EU EN 61000-4-3 rates this test level as; "Class 3: Severe electromagnetic radiation environment. Portable transceivers (2 W rating or more) are in use relatively close to the equipment but not less than 1 m. High power broadcast transmitters are in close proximity to the equipment and ISM equipment may be located close by. A typical industrial environment."

4. **Test equipment, set up, test procedure, and data presentation.**
   Follow the requirements as specified in attachment 10.

7. **Attachments.**
   a. **Attachment 1**
      i. This section deliberately left blank
   b. **Attachment 2**
      i. This section deliberately left blank
   c. **Attachment 3**
      i. **MIL-STD-461F-RE102.pdf**
         1. **12 pages**
   d. **Attachment 4**
      i. This section deliberately left blank
   e. **Attachment 5**
      i. This section deliberately left blank
   f. **Attachment 6**
      i. This section deliberately left blank
   g. **Attachment 7**
      i. This section deliberately left blank
   h. **Attachment 8**
      i. This section deliberately left blank
   i. **Attachment 9**

i. **MIL-STD-461F-CE102**
    1. **5 pages**

j. **Attachment 10**
    i. **IEC EU 61000-4-3 radiated immunity testing standards.**
        1. **53 pages**
        2. Note; A clear copy of **IEC/EU EN 61000-4-3** was not available at the time this procedure was written. However it is imbedded in the provided document **INDIAN STANDARD ELECTROMAGNETIC COMPATIBILITY (EMC) PART 4 TESTING AND MEASUREMENT TECHNIQUES Section 3 Radiated, Radio Frequency, Electromagnetic Field Immunity Test (First Revision)**
        3. The INDIAN STANDARD states "This Standard is identical to IEC 61000-4-3: 2006 'Electromagnetic compatibility (EMC) — Part 4-3: Testing and measurement techniques — Radiated, radio-frequency, electromagnetic field immunity test' issued by the international Electrotechnical Commission (IEC) and was adopted by the Bureau of Indian Standards".

k. **Attachment 11**
    i. Modifications to Led lab test procedures

l. **Attachment 12**
    i. Retlif sample CE102 test data

5.17 RE102, radiated emissions, electric field, 10 kHz to 18 GHz.

5.17.1 RE102 applicability.

This requirement is applicable for radiated emissions from equipment and subsystem enclosures, all interconnecting cables, and antennas designed to be permanently mounted to EUTs (receivers and transmitters in standby mode). The requirement does not apply at the transmitter fundamental frequencies and the necessary occupied bandwidth of the signal. The requirement is applicable as follows:

a.	Ground	2 MHz to 18 GHz*
b.	Ships, surface	10 kHz to 18 GHz*
c.	Submarines	10 kHz to 18 GHz*
d.	Aircraft (Army and Navy ASW)	10 kHz to 18 GHz
e.	Aircraft (Air Force and Navy)	2 MHz to 18 GHz*
f.	Space	10 kHz to 18 GHz*

*Testing is required up to 1 GHz or 10 times the highest intentionally generated frequency within the EUT, whichever is greater. Measurements beyond 18 GHz are not required.

5.17.2 RE102 limits.

Electric field emissions shall not be radiated in excess of those shown in Figures RE102-1 through RE102-4. Above 30 MHz, the limits shall be met for both horizontally and vertically polarized fields.

5.17.3 RE102 test procedures.

5.17.3.1 Purpose.

This test procedure is used to verify that electric field emissions from the EUT and its associated cabling do not exceed specified requirements.

5.17.3.2 Test equipment.

The test equipment shall be as follows:

a. Measurement receivers

b. Data recording device

c. Antennas

(1) 10 kHz to 30 MHz, 104 cm rod with impedance matching network. The signal output connector shall be bonded to the antenna matching network case.

(a) When the impedance matching network includes a preamplifier (active rod), observe the overload precautions in 4.3.7.3.

(b) Use a square counterpoise measuring at least 60 cm on a side.

(2) 30 MHz to 200 MHz, Biconical, 137 cm tip to tip.

(3) 200 MHz to 1 GHz, Double ridge horn, 69.0 by 94.5 cm opening.

(4) 1 GHz to 18 GHz, Double ridge horn, 24.2 by 13.6 cm opening

d. Signal generators

e. Stub radiator

f. Capacitor, 10 pF

g. LISNs

5.17.3.3 Setup.

The test setup shall be as follows:

a. Maintain a basic test setup for the EUT as shown and described in Figures 1 through 5 and 4.3.8. Ensure that the EUT is oriented such that the surface that produces the maximum radiated emissions is toward the front edge of the test setup boundary.

b. Calibration. Configure the test equipment as shown in Figure RE102-5.

c. EUT testing.

(1) For rod antenna measurements, electrical bonding of the counterpoise is prohibited. The required configuration is shown in Figure RE102-6. The shield of the coaxial cable from the rod antenna matching network shall be electrically bonded to the floor in a length as short as possible (not to exceed 10 cm excess length). A ferrite sleeve with 20 to 30 ohms impedance at 20 MHz shall be placed near the center of the coaxial cable length between the antenna matching network and the floor.

(2) Antenna Positioning.

(a) Determine the test setup boundary of the EUT and associated cabling for use in positioning of antennas.

(b) Use the physical reference points on the antennas shown in Figure RE102-6 for measuring heights of the antennas and distances of the antennas from the test setup boundary.

1. Position antennas 1 meter from the front edge of the test setup boundary for all setups.

2. Position antennas 120 cm above the floor ground plane.

3. Ensure that no part of any antenna is closer than 1 meter from the walls and 0.5 meter from the ceiling of the shielded enclosure.

(c) The number of required antenna positions depends on the size of the test setup boundary and the number of enclosures included in the setup.

1. For testing below 200 MHz, use the following criteria to determine the individual antenna positions.

a. For setups with the side edges of the boundary 3 meters or less, one position is required and the antenna shall be centered with respect to the side edges of the boundary.

b. For setups with the side edges of the boundary greater than 3 meters, use multiple antenna positions at spacings as shown in

Figure RE102-7. Determine the number of antenna positions (N) by dividing the edge-to-edge boundary distance (in meters) by 3 and rounding up to an integer.

2. For testing from 200 MHz up to 1 GHz, place the antenna in a sufficient number of positions such that the entire width of each EUT enclosure and the first 35 cm of cables and leads interfacing with the EUT enclosure are within the 3 dB beamwidth of the antenna.

3. For testing at 1 GHz and above, place the antenna in a sufficient number of positions such that the entire width of each EUT enclosure and the first 7 cm of cables and leads interfacing with the EUT enclosure are within the 3 dB beamwidth of the antenna.

5.17.3.4 Procedures.

The test procedures shall be as follows:

a. Verify that the ambient requirements specified in 4.3.4 are met. Take plots of the ambient when required by the referenced paragraph.

b. Turn on the measurement equipment and allow a sufficient time for stabilization.

c. Using the system check path of Figure RE102-5, perform the following evaluation of the overall measurement system from each antenna to the data output device at the highest measurement frequency of the antenna. For rod antennas that use passive matching networks, the evaluation shall be performed at the center frequency of each band. For active rod antennas, the evaluation shall be performed at the lowest frequency of test, at a mid-band frequency, and at the highest frequency of test.

   (1) Apply a calibrated signal level, which is at least 6 dB below the limit (limit minus antenna factor), to the coaxial cable at the antenna connection point.

   (2) Scan the measurement receiver in the same manner as a normal data scan. Verify that the data recording device indicates a level within ±3 dB of the injected signal level.

   (3) For the 104 cm rod antenna, remove the rod element and apply the signal to the antenna matching network through a 10 pF capacitor connected to the rod mount as shown in Figure RE102-8. Commercial calibration jigs or injection networks shall not be used.

   (4) If readings are obtained which deviate by more than ±3 dB, locate the source of the error and correct the deficiency prior to proceeding with the testing.

d. Using the measurement path of Figure RE102-5, perform the following evaluation for each antenna to demonstrate that there is electrical continuity through the antenna.

   (1) Radiate a signal using an antenna or stub radiator at the highest measurement frequency of each antenna.

   (2) Tune the measurement receiver to the frequency of the applied signal and verify that a received signal of appropriate amplitude is present. Note: This evaluation

is intended to provide a coarse indication that the antenna is functioning properly. There is no requirement to accurately measure the signal level.

e. Turn on the EUT and allow sufficient time for stabilization.

f. Using the measurement path of Figure RE102-5, determine the radiated emissions from the EUT and its associated cabling.

(1) Scan the measurement receiver for each applicable frequency range, using the bandwidths and minimum measurement times in Table II.

(2) Above 30 MHz, orient the antennas for both horizontally and vertically polarized fields.

(3) Take measurements for each antenna position determined under 5.17.3.3c(2)(c) above.

5.17.3.5 Data presentation.

Data presentation shall be as follows:

a. Continuously and automatically plot amplitude versus frequency profiles. Manually gathered data is not acceptable except for plot verification. Vertical and horizontal data for a particular frequency range shall be presented on separate plots or shall be clearly distinguishable in black or white format for a common plot.

b. Display the applicable limit on each plot.

c. Provide a minimum frequency resolution of 1% or twice the measurement receiver bandwidth, whichever is less stringent, and a minimum amplitude resolution of 1 dB for each plot.

d. Provide plots for both the measurement and system check portions of the procedure.

e. Provide a statement verifying the electrical continuity of the measurement antennas as determined in 5.17.3.4d.

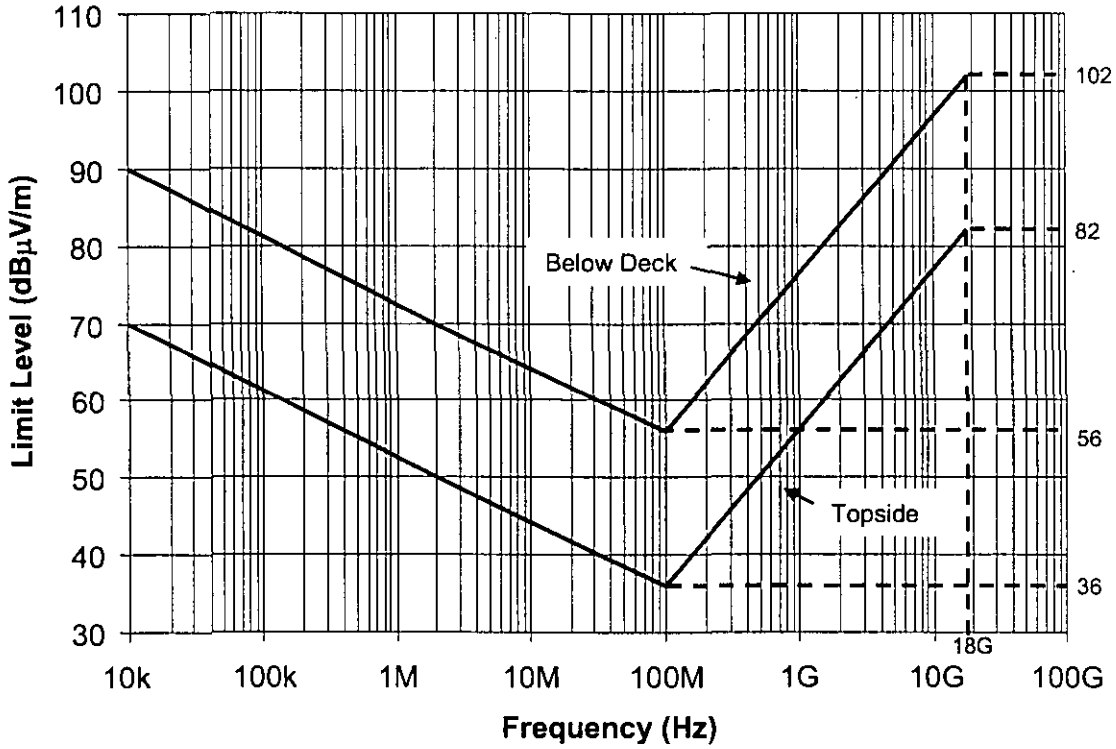

FIGURE RE102-1. RE102 limit for surface ship applications.

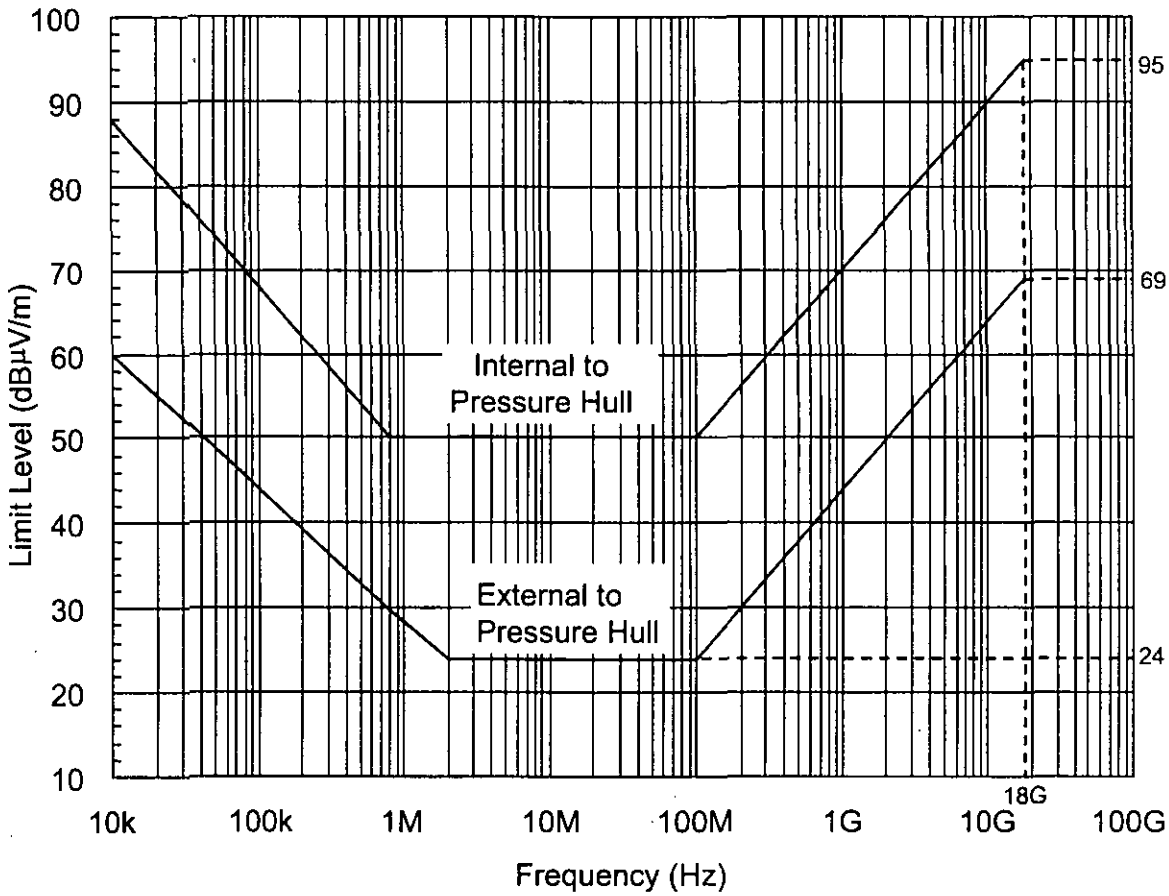

FIGURE RE102-2. RE102 limit for submarine applications.

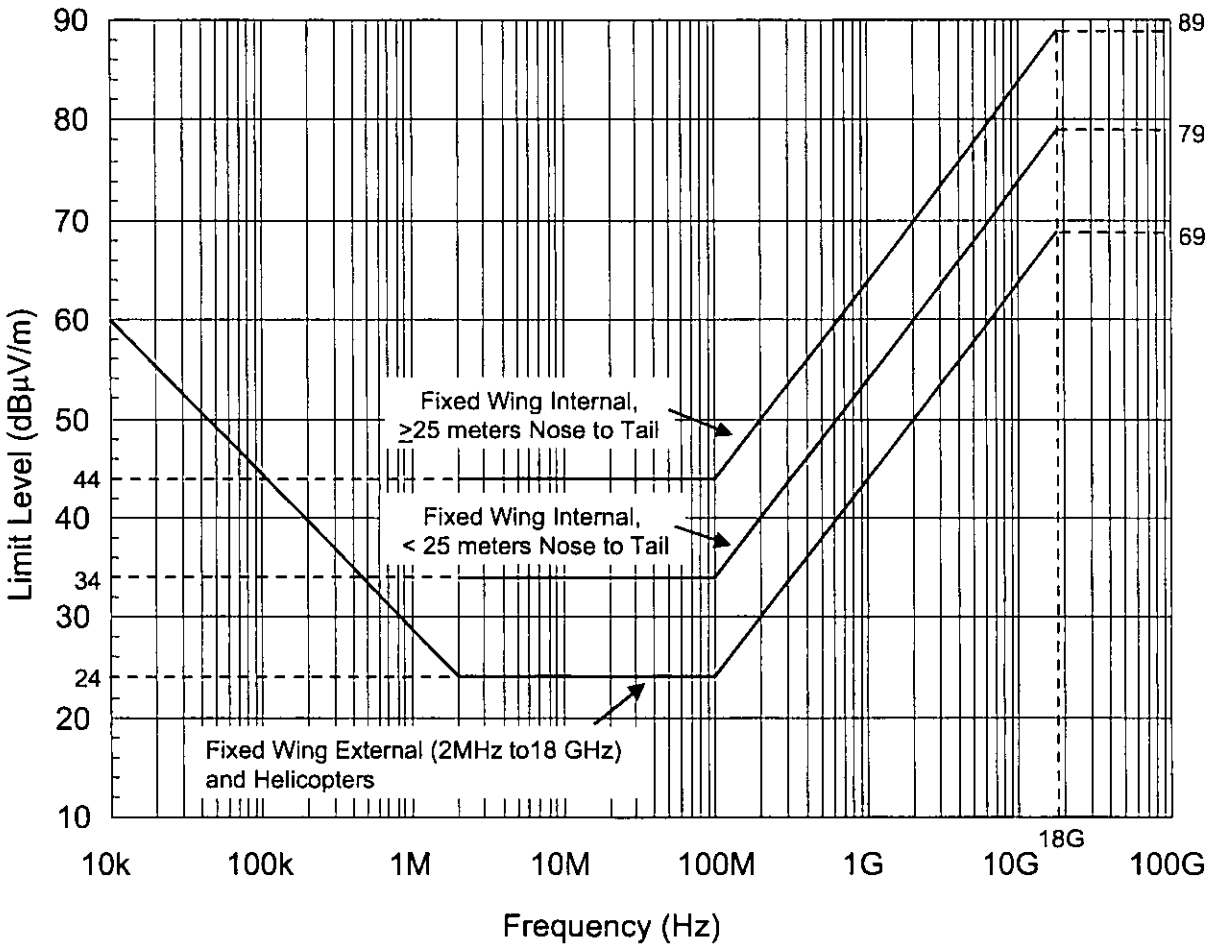

FIGURE RE102-3. RE102 limit for aircraft and space system applications.

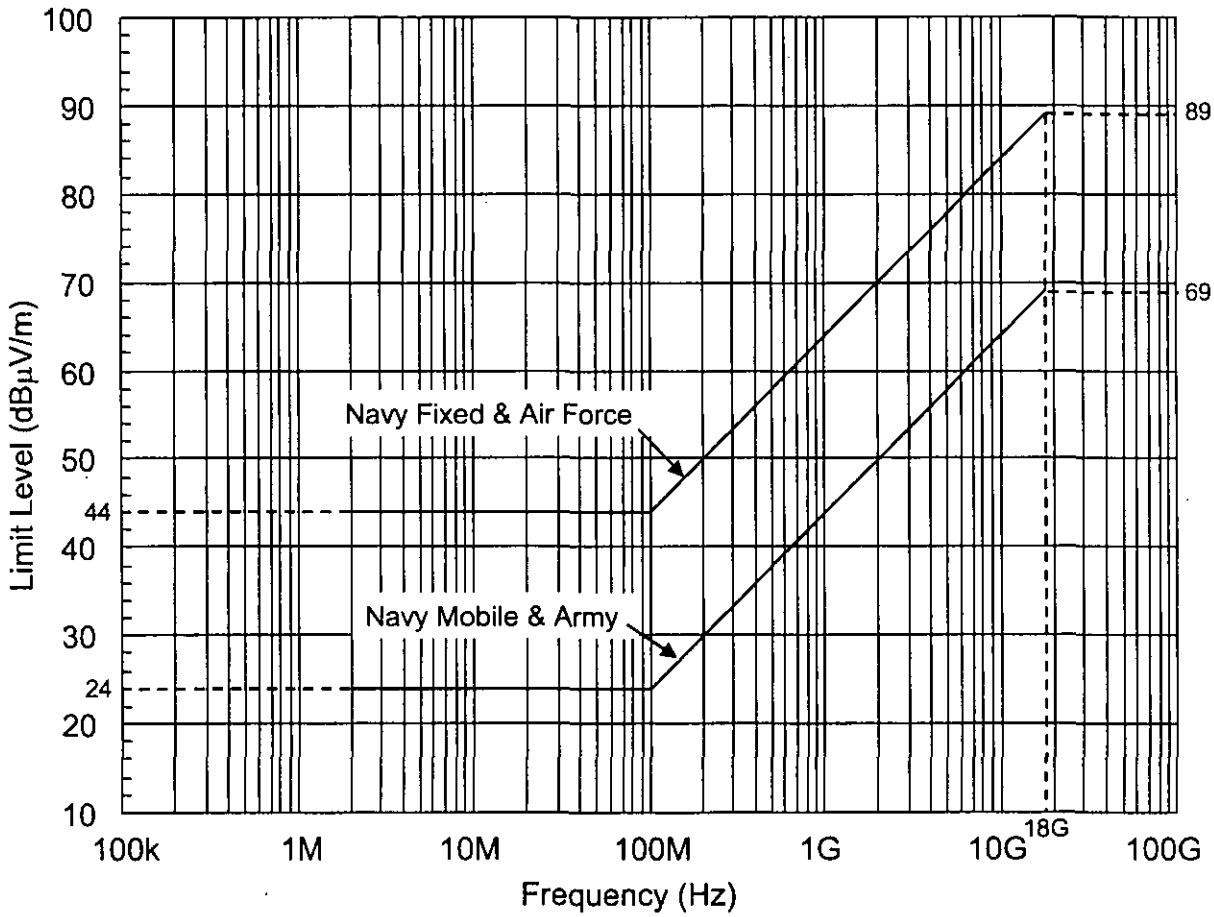

FIGURE RE102-4. RE102 limit for ground applications.

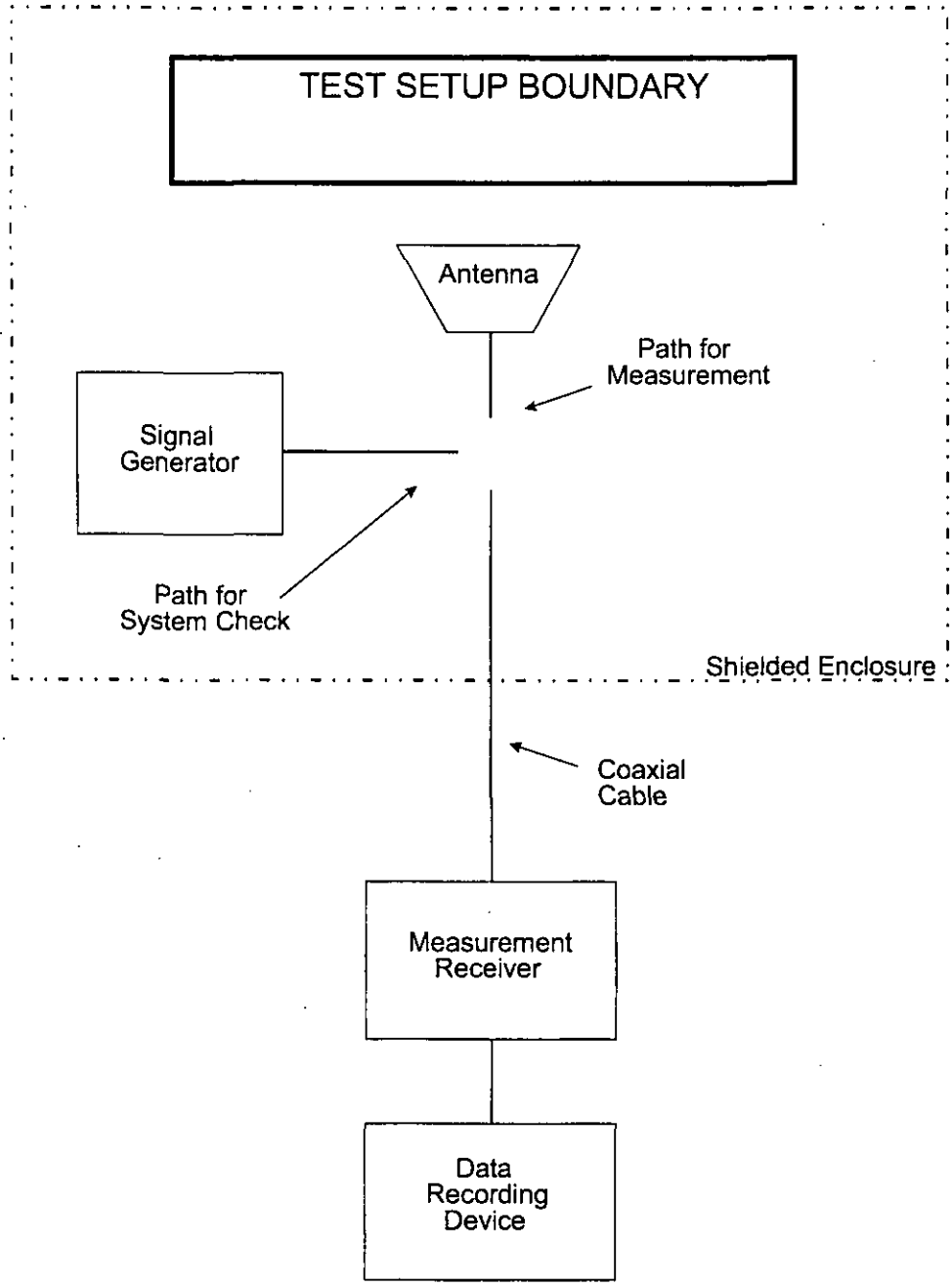

FIGURE RE102-5. Basic test setup.

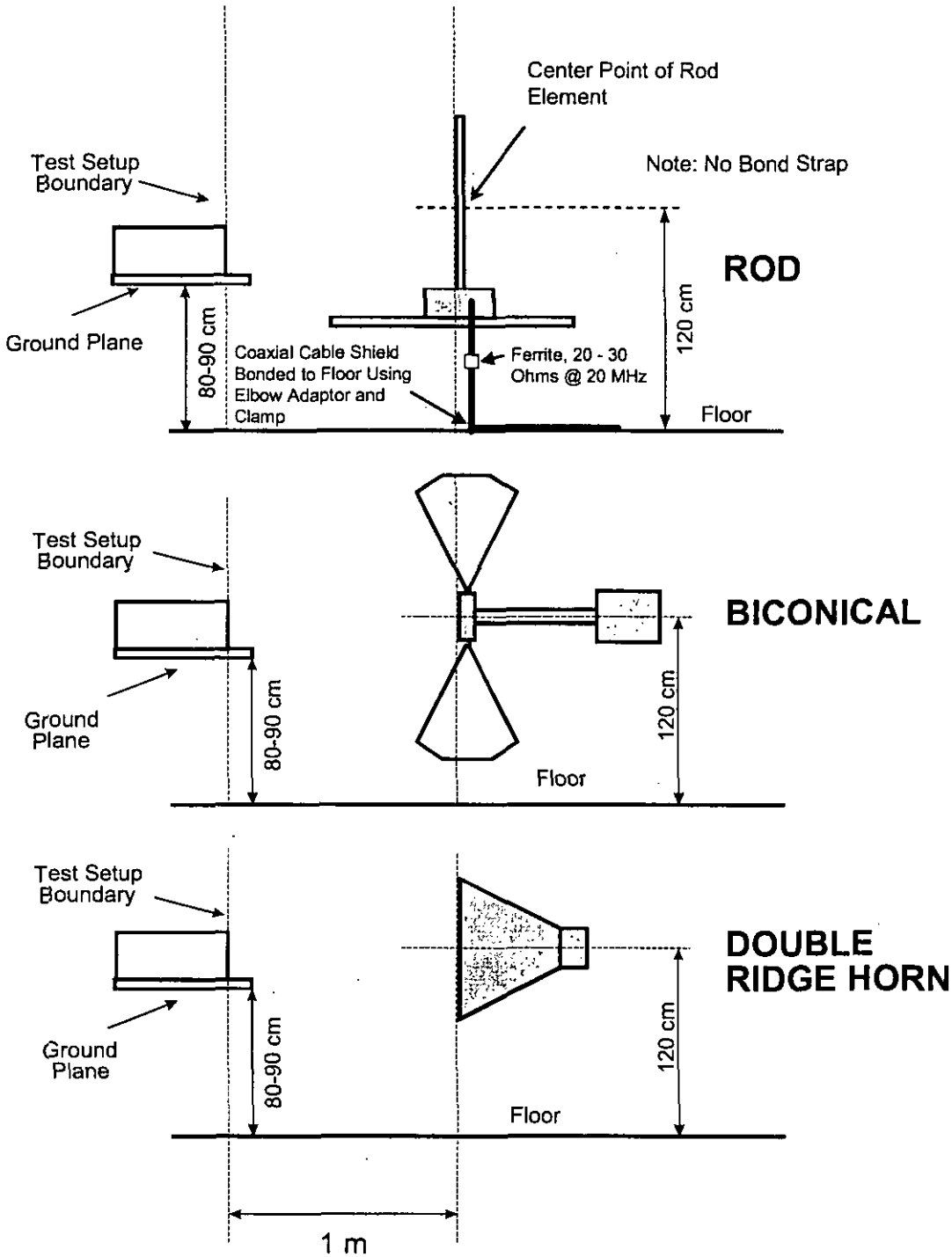

FIGURE RE102-6. Antenna positioning.

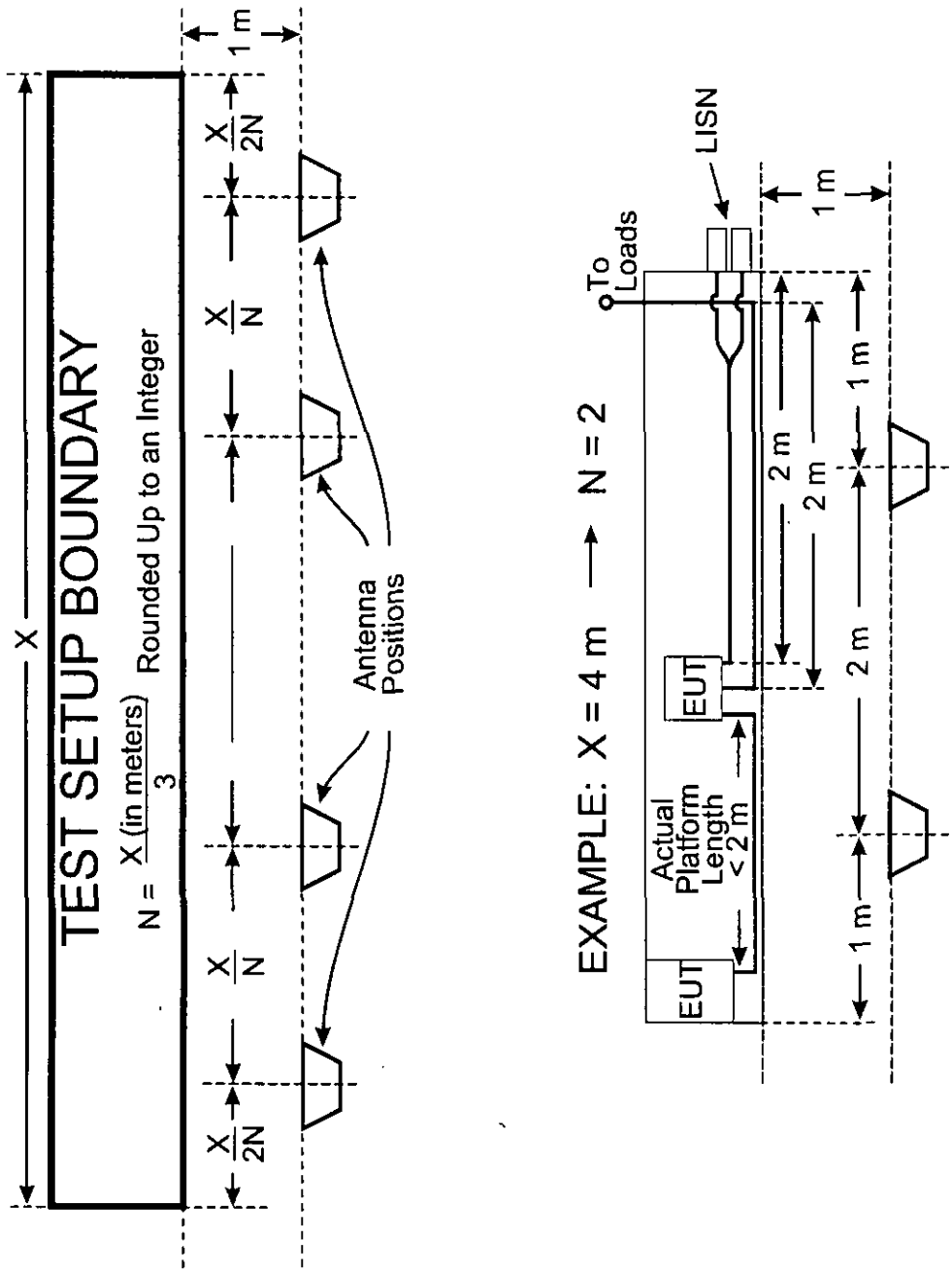

FIGURE RE102-7. Multiple antenna positions.

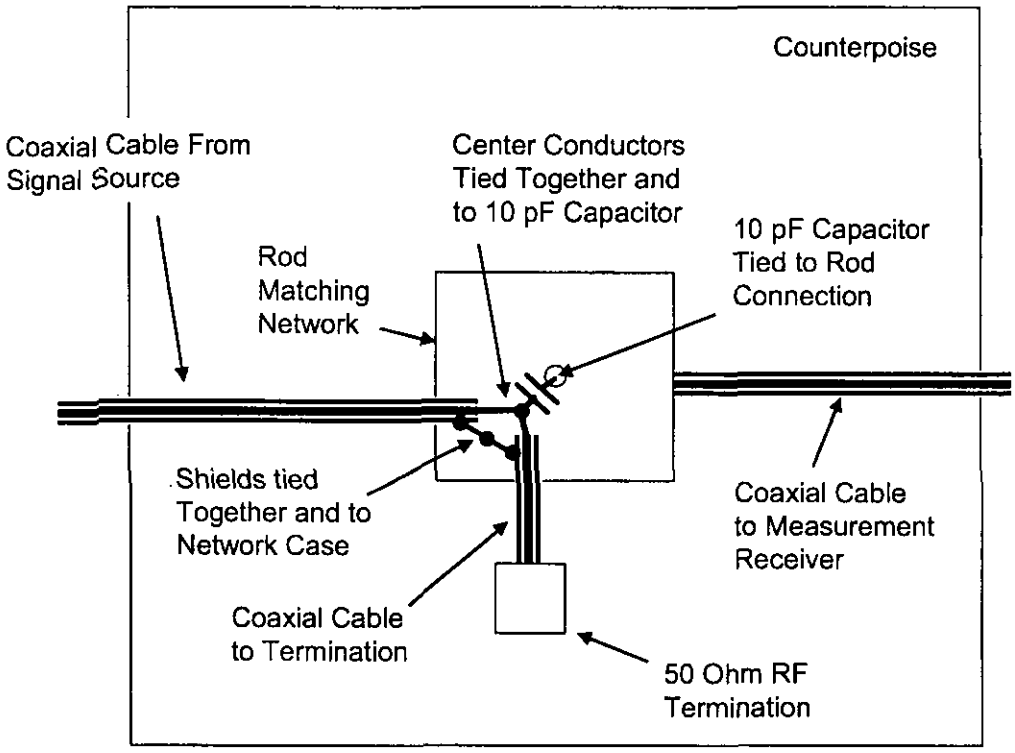

Notes:

1. Each individual wire connection limited to 5 cm length maximum.
2. 50 ohm termination may be replaced with 50 ohm measurement receiver to verify level of injected signal.
3. The 10 pF capacitor may be built into some antenna matching networks.

FIGURE RE102-8. Rod antenna system check.

5.5 CE102, conducted emissions, power leads, 10 kHz to 10 MHz.

5.5.1 CE102 applicability.

This requirement is applicable from 10 kHz to 10 MHz for all power leads, including returns, which obtain power from other sources not part of the EUT.

5.5.2 CE102 limits.

Conducted emissions on power leads shall not exceed the applicable values shown on Figure CE102-1.

5.5.3 CE102 test procedure.

5.5.3.1 Purpose.

This test procedure is used to verify that electromagnetic emissions from the EUT do not exceed the specified requirements for power input leads, including returns.

5.5.3.2 Test equipment.

The test equipment shall be as follows:

a. Measurement receiver

b. Data recording device

c. Signal generator

d. Attenuator, 20 dB, 50 ohm

e. Oscilloscope

f. LISNs

5.5.3.3 Setup.

The test setup shall be as follows:

a. Maintain a basic test setup for the EUT as shown and described in Figures 2 through 5 and 4.3.8.

b. Calibration.

   (1) Configure the test setup for the measurement system check as shown in Figure CE102-2. Ensure that the EUT power source is turned off.

   (2) Connect the measurement receiver to the 20 dB attenuator on the signal output port of the LISN.

c. EUT testing.

   (1) Configure the test setup for compliance testing of the EUT as shown in Figure CE102-3.

   (2) Connect the measurement receiver to the 20 dB attenuator on the signal output port of the LISN.

5.5.3.4 Procedures.

The test procedures shall be as follows:

a. Calibration. Perform the measurement system check using the measurement system check setup of Figure CE102-2.

(1) Turn on the measurement equipment and allow a sufficient time for stabilization.

(2) Apply a signal level that is at least 6 dB below the limit at 10 kHz, 100 kHz, 2 MHz and 10 MHz to the power output terminal of the LISN. At 10 kHz and 100 kHz, use an oscilloscope to calibrate the signal level and verify that it is sinusoidal. At 2 MHz and 10 MHz, use a calibrated output level directly from a 50 Ω signal generator.

(3) Scan the measurement receiver for each frequency in the same manner as a normal data scan. Verify that the measurement receiver indicates a level within ±3 dB of the injected level. Correction factors shall be applied for the 20 dB attenuator and the voltage drop due to the LISN 0.25 μF coupling capacitor (see Figure 6).

(4) If readings are obtained which deviate by more than ±3 dB, locate the source of the error and correct the deficiency prior to proceeding with the testing.

(5) Repeat 5.5.3.4a(2) through 5.5.3.4a(4) for each LISN.

b. EUT testing. Perform emission data scans using the measurement setup of Figure CE102-3.

(1) Turn on the EUT and allow a sufficient time for stabilization.

(2) Select an appropriate lead for testing.

(3) Scan the measurement receiver over the applicable frequency range, using the bandwidths and minimum measurement times in the Table II.

(4) Repeat 5.5.3.4b(2) and 5.5.3.4b(3) for each power lead.

5.5.3.5 Data presentation.

Data presentation shall be as follows:

a. Continuously and automatically plot amplitude versus frequency profiles on X-Y axis outputs. Manually gathered data is not acceptable except for plot verification.

b. Display the applicable limit on each plot.

c. Provide a minimum frequency resolution of 1% or twice the measurement receiver bandwidth, whichever is less stringent, and a minimum amplitude resolution of 1 dB for each plot.

d. Provide plots for both the measurement system check and measurement portions of the procedure.

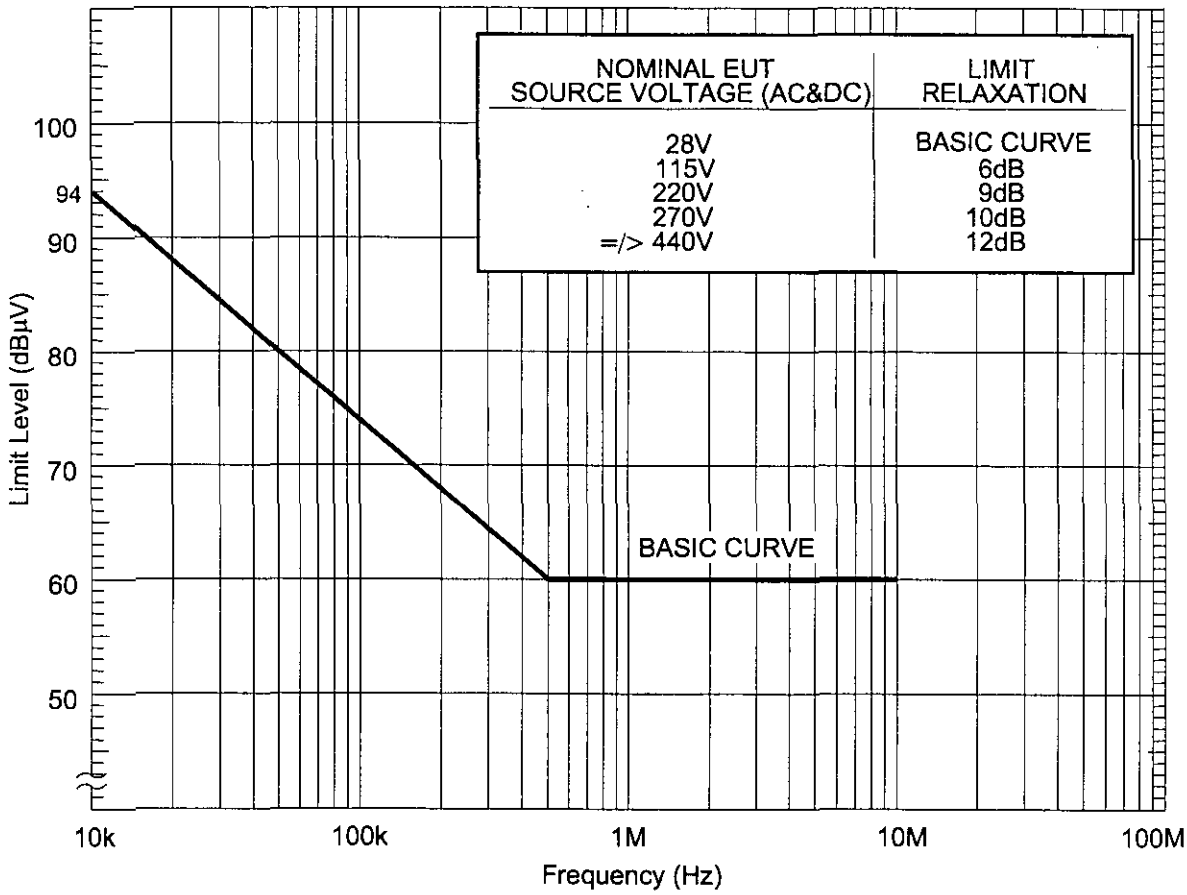

FIGURE CE102-1. CE102 limit (EUT power leads, AC and DC) for all applications.

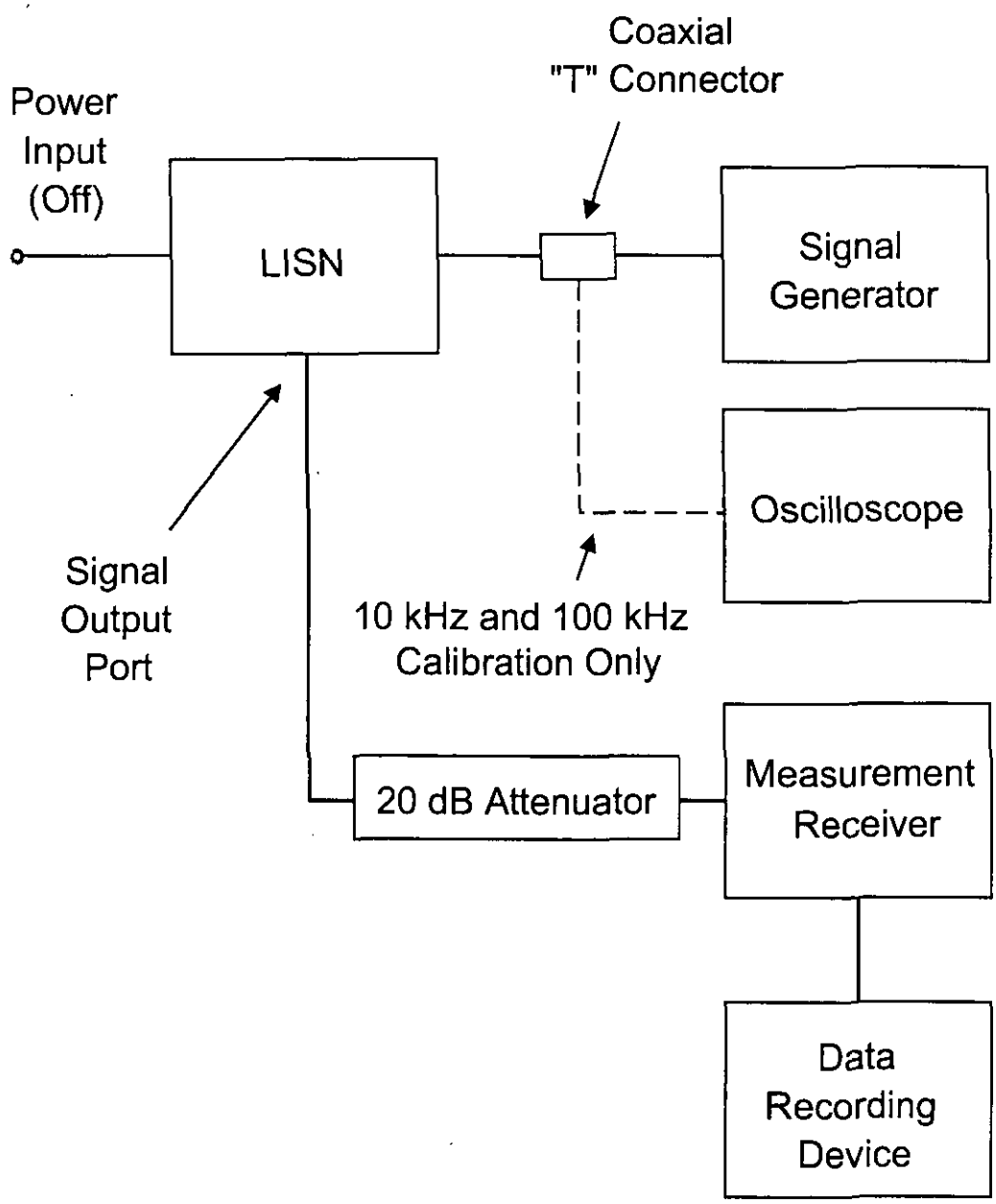

FIGURE CE102-2. Measurement system check setup.

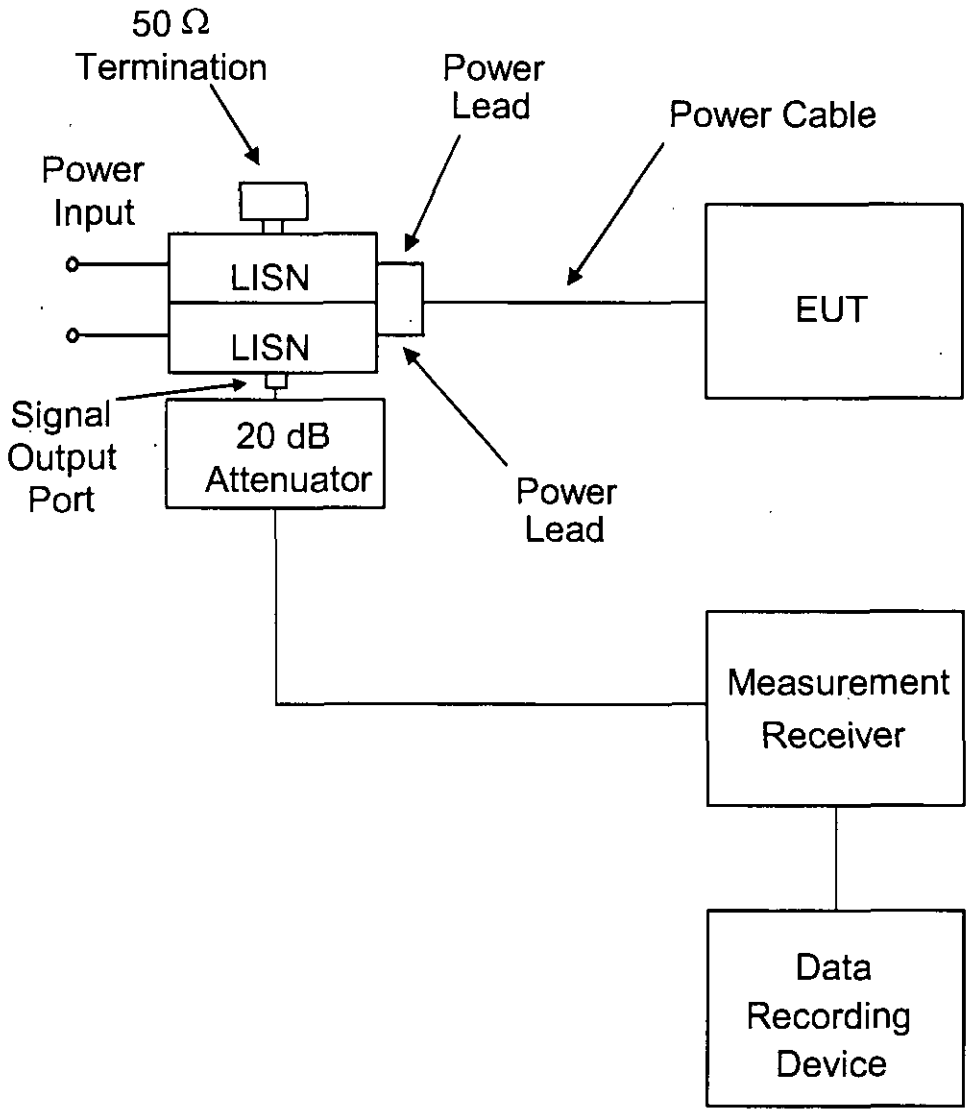

FIGURE CE102-3. Measurement setup.

IS 14700 (Part 4/Sec 3) : 2008
IEC 61000-4-3 : 2006

भारतीय मानक

विद्युत चुम्बकीय संगतता (ई एम सी)

भाग 4 परीक्षण और मापन तकनीकें

अनुभाग 3 विकिरण, रेडियो आवृति विद्युत-चुम्बकीय प्रतिरक्षा परीक्षण

(पहला पुनरीक्षण)

Indian Standard

ELECTROMAGNETIC COMPATIBILITY (EMC)

PART 4 TESTING AND MEASUREMENT TECHNIQUES

Section 3 Radiated, Radio Frequency, Electromagnetic Field Immunity Test

(First Revision)

ICS 33.100.20

© BIS 2008

BUREAU OF INDIAN STANDARDS
MANAK BHAVAN, 9 BAHADUR SHAH ZAFAR MARG
NEW DELHI 110002

September 2008

Price Group 14

NATIONAL FOREWORD

This Indian Standard (Part 4/Sec 3) (First Revision) which is identical with IEC 61000-4-3 : 2006 'Electromagnetic compatibility (EMC) — Part 4-3: Testing and measurement techniques — Radiated, radio-frequency, electromagnetic field immunity test' issued by the International Electrotechnical Commission (IEC) was adopted by the Bureau of Indian Standards on the recommendation of the Electromagnetic Compatibility Sectional Committee and approval of the Electronics and Information Technology Division Council.

This standard was originally published in 2005 and was identical to IEC 61000-4-3 : 2002. This standard is being revised to align it with the latest IEC publication IEC 61000-4-3 : 2006.

The text of IEC Standard has been approved as suitable for publication as an Indian Standard without deviations. Certain conventions are, however, not identical to those used in Indian Standards. Attention is particularly drawn to the following:

a) Wherever the words 'International Standard' appear referring to this standard, they should be read as 'Indian Standard'.

b) Comma (,) has been used as a decimal marker, while in Indian Standards, the current practice is to use a point (.) as the decimal marker.

In this adopted standard, reference appears to the following International Standard for which Indian Standard also exists. The corresponding Indian Standard which is to be substituted in its respective place is listed below along with its degree of equivalence for the edition indicated:

International Standard	*Corresponding Indian Standard*	*Degree of Equivalence*
IEC 60050-161 : 1990 International Electrotechnical Vocabulary (IEV) — Chapter 161: Electromagnetic compatibility	IS 1885 (Part 85) : 2003 Electrotechnical vocabulary: Part 85 Electromagnetic compatibility	Identical

The technical committee responsible for the preparation of this standard has reviewed the provisions of following International Standard referred in this adopted standard and has decided that it is acceptable for use in conjunction with this standard:

International Standard	*Title*
IEC 61000-4-6 : 2006	Electromagnetic compatibility (EMC) — Part 4-6: Testing and measurement techniques — Immunity to conducted disturbances induced by radio-frequency fields

Only the English language text of the International Standard has been retained while adopting it as an Indian Standard, and as such the page numbers given here are not the same as in the IEC Publication.

Indian Standard

ELECTROMAGNETIC COMPATIBILITY (EMC)

PART 4 TESTING AND MEASUREMENT TECHNIQUES

Section 3 Radiated, Radio Frequency, Electromagnetic Field Immunity Test

(First Revision)

1 Scope and object

This part of IEC 61000 is applicable to the immunity requirements of electrical and electronic equipment to radiated electromagnetic energy. It establishes test levels and the required test procedures.

The object of this standard is to establish a common reference for evaluating the immunity of electrical and electronic equipment when subjected to radiated, radio-frequency electromagnetic fields. The test method documented in this part of IEC 61000 describes a consistent method to assess the immunity of an equipment or system against a defined phenomenon.

NOTE 1 As described in IEC Guide 107, this is a basic EMC publication for use by product committees of the IEC. As also stated in Guide 107, the IEC product committees are responsible for determining whether this immunity test standard should be applied or not, and if applied, they are responsible for determining the appropriate test levels and performance criteria. TC 77 and its sub-committees are prepared to co-operate with product committees in the evaluation of the value of particular immunity tests for their products.

This part deals with immunity tests related to the protection against RF electromagnetic fields from any source.

Particular considerations are devoted to the protection against radio-frequency emissions from digital radiotelephones and other RF emitting devices.

NOTE 2 Test methods are defined in this part for evaluating the effect that electromagnetic radiation has on the equipment concerned. The simulation and measurement of electromagnetic radiation is not adequately exact for quantitative determination of effects. The test methods defined are structured for the primary objective of establishing adequate repeatability of results at various test facilities for qualitative analysis of effects.

This standard is an independent test method. Other test methods may not be used as substitutes for claiming compliance with this standard.

2 Normative references

The following referenced documents are indispensable for the application of this document. For dated references, only the edition cited applies. For undated references, the latest edition of the referenced document (including any amendments) applies.

IEC 60050(161), *International Electrotechnical Vocabulary (IEV) – Chapter 161: Electromagnetic compatibility*

IEC 61000-4-6, *Electromagnetic compatibility (EMC) – Part 4-6: Testing and measurement techniques – Immunity to conducted disturbances, induced by radio-frequency fields*

3 Terms and definitions

For the purposes of this part of IEC 61000, the following definitions, together with those in IEC 60050(161) apply.

3.1
amplitude modulation
process by which the amplitude of a carrier wave is varied following a specified law

3.2
anechoic chamber
shielded enclosure which is lined with radio-frequency absorbers to reduce reflections from the internal surfaces

3.2.1
fully anechoic chamber
shielded enclosure whose internal surfaces are totally lined with anechoic material

3.2.2
semi-anechoic chamber
shielded enclosure where all internal surfaces are covered with anechoic material with the exception of the floor, which shall be reflective (ground plane)

3.2.3
modified semi-anechoic chamber
semi-anechoic chamber which has additional absorbers installed on the ground plane

3.3
antenna
transducer which either emits radio-frequency power into space from a signal source or intercepts an arriving electromagnetic field, converting it into an electrical signal

3.4
balun
device for transforming an unbalanced voltage to a balanced voltage or vice versa

[IEV 161-04-34]

3.5
continuous waves (CW)
electromagnetic waves, the successive oscillations of which are identical under steady-state conditions, which can be interrupted or modulated to convey information

3.6
electromagnetic (EM) wave
radiant energy produced by the oscillation of an electric charge characterized by oscillation of the electric and magnetic fields

3.7
far field
region where the power flux density from an antenna approximately obeys an inverse square law of the distance.

For a dipole this corresponds to distances greater than $\lambda/2\pi$, where λ is the wavelength of the radiation

3.8
field strength
The term "field strength" is applied only to measurements made in the far field. The measurement may be of either the electric or the magnetic component of the field and may be expressed as V/m, A/m or W/m^2; any one of these may be converted into the others.

NOTE For measurements made in the near field, the term "electric field strength" or "magnetic field strength" is used according to whether the resultant electric or magnetic field, respectively, is measured. In this field region, the relationship between the electric and magnetic field strength and distance is complex and difficult to predict, being dependent on the specific configuration involved. Inasmuch as it is not generally feasible to determine the time and space phase relationship of the various components of the complex field, the power flux density of the field is similarly indeterminate.

3.9
frequency band
continuous range of frequencies extending between two limits

3.10
E_c
field strength applied for calibration

3.11
E_t
carrier field strength applied for testing

3.12
full illumination
test method in which the EUT face being tested fits completely within the UFA (Uniform Field Area).

This test method may be applied for all test frequencies

3.13
human body-mounted equipment
equipment which is intended for use when attached to or held in close proximity to the human body.

This term includes hand-held devices which are carried by people while in operation (e.g. pocket devices) as well as electronic aid devices and implants

3.14
independent windows method
test method (using 0,5 m × 0,5 m UFA) in which the EUT face being tested does not fit completely within the UFA.

This test method may be applied for test frequencies greater than 1 GHz

3.15
induction field
predominant electric and/or magnetic field existing at a distance $d < \lambda/2\pi$, where λ is the wavelength, and the physical dimensions of the source are much smaller than distance d

3.16
intentional RF emitting device
device which radiates (transmits) an electromagnetic field intentionally. Examples include digital mobile telephones and other radio devices

3.17
isotropic
having properties of equal values in all directions

3.18
maximum RMS value
highest short-term RMS value of a modulated RF signal during an observation time of one modulation period.

The short-term RMS is evaluated over a single carrier cycle. For example, in Figure 1b), the maximum RMS voltage is:

$$V_{\text{maximum RMS}} = V_{\text{p-p}} / (2 \times \sqrt{2}) = 1{,}8 \text{ V}$$

3.19
non-constant envelope modulation
RF modulation schemes in which the amplitude of the carrier wave varies slowly in time compared with the period of the carrier itself. Examples include conventional amplitude modulation and TDMA

3.20
Pc
forward power needed to establish the calibration field strength

3.21
partial illumination
test method (using a minimum sized UFA of 1,5 × 1,5 m) in which the EUT face being tested does not fit completely within the UFA.

This test method may be applied for all test frequencies.

3.22
polarization
orientation of the electric field vector of a radiated field

3.23
shielded enclosure
screened or solid metal housing designed expressly for the purpose of isolating the internal from the external electromagnetic environment. The purpose is to prevent outside ambient electromagnetic fields from causing performance degradation and to prevent emission from causing interference to outside activities

3.24
sweep
continuous or incremental traverse over a range of frequencies

3.25
TDMA (time division multiple access)
time multiplexing modulation scheme which places several communication channels on the same carrier wave at an allocated frequency. Each channel is assigned a time slot during which, if the channel is active, the information is transmitted as a pulse of RF power. If the channel is not active no pulse is transmitted, thus the carrier envelope is not constant. During the pulse, the amplitude is constant and the RF carrier is frequency- or phase-modulated

3.26
transceiver
combination of radio transmitting and receiving equipment in a common housing

3.27
uniform field area (UFA)
hypothetical vertical plane of the field calibration in which variations are acceptably small.

The purpose of field calibration is to ensure the validity of the test result. See 6.2

4 General

Most electronic equipment is, in some manner, affected by electromagnetic radiation. This radiation is frequently generated by such general purpose sources as the small hand-held radio transceivers that are used by operating, maintenance and security personnel, fixed-station radio and television transmitters, vehicle radio transmitters, and various industrial electromagnetic sources.

In recent years there has been a significant increase in the use of radio telephones and other RF emitting devices operating at frequencies between 0,8 GHz and 6 GHz. Many of these services use modulation techniques with a non-constant envelope (e.g. TDMA). See 5.2.

In addition to electromagnetic energy deliberately generated, there is also radiation caused by devices such as welders, thyristors, fluorescent lights, switches operating inductive loads, etc. For the most part, this interference manifests itself as conducted electrical interference and, as such, is dealt with in other parts of the IEC 61000-4 standard series. Methods employed to prevent effects from electromagnetic fields will normally also reduce the effects from these sources.

The electromagnetic environment is determined by the strength of the electromagnetic field. The field strength is not easily measured without sophisticated instrumentation nor is it easily calculated by classical equations and formulas because of the effect of surrounding structures or the proximity of other equipment that will distort and/or reflect the electromagnetic waves.

5 Test levels

The test levels are given in Table 1.

Table 1 – Test levels related to general purpose, digital radio telephones and other RF emitting devices

Level	Test field strength V/m
1	1
2	3
3	10
4	30
x	Special
NOTE x is an open test level and the associated field strength may be any value. This level may be given in the product standard.	

This standard does not suggest that a single test level is applicable over the entire frequency range. Product committees shall select the appropriate test level for each frequency range needing to be tested as well as the frequency ranges. See Annex E for a guidance for product committees on the selection of test levels.

The test field strength column gives values of the unmodulated carrier signal. For testing of equipment, this carrier signal is 80 % amplitude modulated with a 1 kHz sine wave to simulate actual threats (see Figure 1). Details of how the test is performed are given in Clause 8.

5.1 Test levels related to general purposes

The tests are normally performed without gaps in the frequency range 80 MHz to 1 000 MHz.

NOTE 1 Product committees may decide to choose a lower or higher transition frequency than 80 MHz between IEC 61000-4-3 and IEC 61000-4-6 (see Annex G).

NOTE 2 Product committees may select alternative modulation schemes for equipment under test.

NOTE 3 IEC 61000-4-6 also defines test methods for establishing the immunity of electrical and electronic equipment against radiated electromagnetic energy. It covers frequencies below 80 MHz.

5.2 Test levels related to the protection against RF emissions from digital radio telephones and other RF emitting devices

The tests are normally performed in the frequency ranges 800 MHz to 960 MHz and 1,4 GHz to 6,0 GHz.

The frequencies or frequency bands to be selected for the test are limited to those where mobile radio telephones and other intentional RF emitting devices actually operate. It is not intended that the test needs to be applied continuously over the entire frequency range from 1,4 GHz to 6 GHz. For those frequency bands used by mobile radio telephones and other intentional RF emitting devices, specific test levels may be applied in the corresponding frequency range of operation.

Also if the product is intended to conform only to the requirements of particular countries, the measurement range 1,4 GHz to 6 GHz may be reduced to cover just the specific frequency bands allocated to digital mobile telephones and other intentional RF emitting devices in those countries. In this situation, the decision to test over reduced frequency ranges shall be documented in the test report.

NOTE 1 Annex A contains an explanation regarding the decision to use sine wave modulation for tests related to protection against RF emissions from digital radio telephones and other intentional RF emitting devices.

NOTE 2 Annex E contains guidance with regard to selecting test levels.

NOTE 3 The measurement ranges for Table 2 are the frequency bands generally allocated to digital radio telephones (Annex G contains the list of frequencies known to be allocated to specific digital radio telephones at the time of publication).

NOTE 4 The primary threat above 800 MHz is from radio telephone systems and other intentional RF emitting devices with power levels similar to that of radio telephones. Other systems operating in this frequency range, e.g. radio LANs operating at 2,4 GHz or higher frequencies, are generally very low power (typically lower than 100 mW), so they are much less likely to present significant problems.

6 Test equipment

The following types of test equipment are recommended:

- *Anechoic chamber:* of a size adequate to maintain a uniform field of sufficient dimensions with respect to the equipment under test (EUT). Additional absorbers may be used to damp reflections in chambers which are not fully lined.
- *EMI filters:* care shall be taken to ensure that the filters introduce no additional resonance effects on the connected lines.
- *RF signal generator(s)* capable of covering the frequency band of interest and of being amplitude modulated by a 1 kHz sine wave with a modulation depth of 80%. They shall have manual control (e.g., frequency, amplitude, modulation index) or, in the case of RF synthesizers, they shall be programmable with frequency-dependent step sizes and dwell times.

  The use of low-pass or band-pass filters may be necessary to avoid problems caused by harmonics.
- *Power amplifiers:* to amplify signal (unmodulated and modulated) and provide antenna drive to the necessary field level. The harmonics generated by the power amplifier shall be such that any measured field strength in the UFA at each harmonic frequency shall be at least 6 dB below that of the fundamental frequency (see Annex D).
- *Field generating antennas (see Annex B):* biconical, log periodic, horn or any other linearly polarized antenna system capable of satisfying frequency requirements.
- *An isotropic field sensor* with adequate immunity of any head amplifier and opto-electronics to the field strength to be measured, and a fibre optic link to the indicator outside the chamber. An adequately filtered signal link may also be used.
- *Associated equipment to record the power levels* necessary for the required field strength and to control the generation of that level for testing.

  Care shall be taken to ensure adequate immunity of the auxiliary equipment.

6.1 Description of the test facility

Because of the magnitude of the field strengths generated, the tests shall be made in a shielded enclosure in order to comply with various national and international laws prohibiting interference to radio communications. In addition, since most test equipment used to collect data is sensitive to the local ambient electromagnetic field generated during the execution of the immunity test, the shielded enclosure provides the necessary "barrier" between the EUT and the required test instrumentation. Care shall be taken to ensure that the interconnection wiring penetrating the shielded enclosure adequately attenuates the conducted and radiated emission and preserves the integrity of the EUT signal and power responses.

The test facility typically consists of an absorber-lined shielded enclosure large enough to accommodate the EUT whilst allowing adequate control over the field strengths. This includes anechoic chambers or modified semi-anechoic chambers, an example of which is shown in Figure 2. Associated shielded enclosures should accommodate the field generating and monitoring equipment, and the equipment which exercises the EUT.

Anechoic chambers are less effective at lower frequencies. Particular care shall be taken to ensure the uniformity of the generated field at the lower frequencies. Further guidance is given in Annex C.

6.2 Calibration of field

The purpose of field calibration is to ensure that the uniformity of the field over the test sample is sufficient to ensure the validity of the test results. IEC 61000-4-3 uses the concept of a uniform field area (UFA, see Figure 3), which is a hypothetical vertical plane of the field in which variations are acceptably small. In a common procedure (field calibration), the capability of the test facility and the test equipment to generate such a field is demonstrated. At the same time, a database for setting the required field strength for the immunity test is obtained. The field calibration is valid for all EUTs whose individual faces (including any cabling) can be fully covered by the UFA.

The field calibration is performed with no EUT in place (see Figure 3). In this procedure, the relationship between field strength within the UFA and forward power applied to the antenna is determined. During the test, the required forward power is calculated from this relationship and the target field strength. The calibration is valid as long as the test setup used for it remains unchanged for testing, therefore the calibration setup (antenna, additional absorber, cables, etc.) shall be recorded. It is important that the exact position, as much as is reasonably possible, of the generating antennas and cables is documented. Since even small displacements may significantly affect the field, the same positions shall be used also for the immunity test.

It is intended that the full field calibration process should be carried out annually and when changes have been made in the enclosure configuration (absorber replaced, area moved, equipment changed, etc.). Before each batch of testing (see Clause 8), the validity of the calibration shall be checked.

The transmitting antenna shall be placed at a distance sufficient to allow the UFA to fall within the beam of the transmitted field. The field sensor shall be at least 1 m from the field generating antenna. A distance of 3 m between the antenna and the UFA is preferred (see Figure 3). This dimension is measured from the centre of a biconical antenna, or the front tip of a log periodic or combination antenna, or from the front edge of horn or double ridge wave guide antenna. The calibration record and the test report shall state the distance used.

Unless the EUT and its wires can be fully illuminated within a smaller surface, the size of the UFA is at least 1,5 m × 1,5 m with its lower edge established at a height of 0,8 m above the floor. The size of the UFA shall not be less than 0,5 m × 0,5 m. During the immunity test, the EUT shall have the face to be illuminated coincident with this UFA (see Figures 5 and 6).

In order to establish the severity of the test for EUTs and cabling which must be tested close to the floor (earth reference plane), the magnitude of the field is also recorded at 0,4 m height. The obtained data is documented in the calibration record but is not considered for the suitability of the test facility and for the calibration database.

Due to reflections at the floor in a semi-anechoic room, it is difficult to establish a UFA close to an earth reference plane. Additional absorbing material on the earth reference plane may solve this problem (see Figure 2).

The UFA is subdivided into a grid with a grid spacing of 0,5 m (see Figure 4 as an example of an 1,5 m × 1,5 m UFA). At each frequency, a field is considered uniform if its magnitude measured at the grid points is within $^{-0}_{+6}$ dB of the nominal value for not less than 75 % of all grid points (e.g. if at least 12 of the 16 points of an 1,5 m × 1,5 m UFA measured are within the tolerance). For the minimum UFA of 0,5 m × 0,5 m, the field magnitude for all four grid points shall lie within this tolerance.

NOTE 1 At different frequencies, different measuring points may be within the tolerance.

The tolerance has been expressed as $^{-0}_{+6}$ dB to ensure that the field strength does not fall below nominal with an acceptable probability. The tolerance of 6 dB is considered to be the minimum achievable in practical test facilities.

In the frequency range up to 1 GHz, a tolerance greater than +6 dB, up to +10 dB, but not less than -0 dB is allowed for a maximum of 3 % of the test frequencies, provided that the actual tolerance is stated in the test report. In case of dispute, the $^{-0}_{+6}$ dB tolerance takes precedence.

If the area intended to be occupied by the face of the actual EUT is larger than 1,5 m x 1,5 m and an UFA with sufficient dimensions (preferred method) can not be realised, then the area to be occupied by the EUT may be illuminated in a series of tests ("partial illumination"). Either:

- a calibration shall be performed at different radiating antenna locations so that the combined UFAs cover the area which will be occupied by the face of the EUT, and the EUT shall then be tested with the antenna in each of these positions successively,
- or the EUT shall be moved to different positions so that each part of it falls within the UFA during at least one of these tests.

NOTE 2 Each of the antenna positions requires a full field calibration.

Table 2 below demonstrates the concepts of full illumination and partial illumination as well as where and how they can be applied.

Table 2 – Requirements for uniform field area for application of full illumination, partial illumination and independent windows method

Frequency range	Requirements of UFA size and calibration when the EUT fits completely within UFA (Full Illumination, the preferred method)	Requirements of UFA size and calibration when the EUT does not fit completely within UFA (Partial Illumination and Independent Windows, the alternative methods)
Less than 1 GHz	Minimum UFA size 0,5 m x 0,5 m UFA size in 0,5 m grid size steps (e.g., 0,5 m x 0,5 m; 0,5 m x 1,0 m; 1,0 m x 1,0 m; etc) Calibration in 0,5 m x 0,5 m grid steps 75 % of calibration points within specifications if UFA is larger than 0,5 m x 0,5 m. 100 % (all 4 points) must be in specifications for 0,5 m x 0,5 m UFA.	PARTIAL ILLUMINATION Minimum UFA size 1,5 m x 1,5 m UFA size in 0,5 m grid size steps (e.g., 1,5 m x 1,5 m; 1,5 m x 2,0 m; 2,0 m x 2,0 m; etc) Calibration in 0,5 m x 0,5 m grid steps 75 % of calibration points within specifications

Table 2 *(continued)*

Frequency range	Requirements of UFA size and calibration when the EUT fits completely within UFA (Full Illumination, the preferred method)	Requirements of UFA size and calibration when the EUT does not fit completely within UFA (Partial Illumination and Independent Windows, the alternative methods)
Greater than 1 GHz	Minimum UFA size 0,5 m × 0,5 m UFA size in 0,5 m grid size steps (e.g., 0,5 m × 0,5 m; 0,5 m × 1,0 m; 1,0 m × 1,0 m; etc) Calibration in 0,5 m × 0,5 m grid steps 75 % of calibration points within specifications if UFA is larger than 0,5 m × 0,5 m. 100 % (all 4 points) must be in specifications for 0,5 m × 0,5 m UFA.	INDEPENDENT WINDOWS METHOD 0,5 m × 0,5 m window (See Annex H) PARTIAL ILLUMINATION 1,5 m × 1,5 m and larger size windows in 0,5 m increments (e.g., 1,5 m × 2,0 m; 2,0 m × 2,0 m; etc) Calibration in 0,5 m × 0,5 m grid steps 75 % of calibration points within specifications if UFA is larger than 0,5 m × 0,5 m. 100 % (all 4 points) must be in specifications for 0,5 m × 0,5 m UFA.

If the requirements of this subclause can only be satisfied up to a certain limiting frequency (higher than 1 GHz), for example because the beam width of the antenna is insufficient to illuminate the entire EUT, then for frequencies higher than this, a second alternative method (known as "the independent window method"), described in Annex H, may be used.

Generally the calibration of the field in anechoic and semi-anechoic chambers has to be performed using the test setup shown in Figure 7. The calibration shall always be performed with an unmodulated carrier for both horizontal and vertical polarisations in accordance with the steps given below. It is required to ensure that the amplifiers can handle the modulation and are not saturated during testing. The preferred method to ensure the amplifiers are not saturated during testing is to carry out the calibration with a field strength at least 1,8 times as high as the field strength to be applied to the EUT. Denote this calibration field strength by E_c. E_c is the value which is applicable only to field calibration. The test field strength E_t shall not exceed E_c /1,8.

NOTE 3 Other methods to ensure avoiding saturation may be used.

Two different calibration methods are described below using an 1,5 m × 1,5 m UFA (16 grid points) as an example. These methods are considered to give the same field uniformity.

8.2.1 Constant field strength calibration method

The constant field strength of the uniform field shall be established and measured via a calibrated field sensor at each particular frequency and at each of the 16 points one after the other (see Figure 4) using the step size given in Clause 8, by adjusting the forward power accordingly.

The forward power necessary to establish the field strength chosen shall be measured in accordance with Figure 7 and is to be recorded in dBm for the 16 points.

Procedure to be followed at both horizontal and vertical polarisations:

a) Position the sensor at one of the 16 points in the grid (see Figure 4), and set the frequency of the signal generator output to the lowest frequency in the range of the test (for example 80 MHz).

b) Adjust the forward power to the field-generating antenna so that the field strength obtained is equal to the required calibration field strength E_c. Record the forward power reading.

c) Increase the frequency by a maximum of 1 % of the present frequency.

d) Repeat steps b) and c) until the next frequency in the sequence would exceed the highest frequency in the range of the test. Finally, repeat step b) at this highest frequency (for example 1 GHz).

e) Repeat steps a) to d) for each point in the grid.

At each frequency:

f) Sort the 16 forward power readings into ascending order.

g) Start at the highest value and check if at least the 11 readings below this value are within the tolerance of –6 dB to +0 dB of that value.

h) If they are not within this tolerance of –6 dB to +0 dB, go back to the same procedure, starting by the reading immediately below and so on (notice that there are only five possibilities for each frequency).

i) Stop the procedure if at least 12 numbers are within 6 dB and record the maximum forward power out of the numbers. Denote this forward power by P_c;

j) Confirm that the test system (e.g. the power amplifier) is not in saturation. Assuming that E_c has been chosen as 1,8 times E_t, perform the following procedure at each calibration frequency:

   j-1) Decrease the output from the signal generator by 5,1 dB from the level needed to establish a forward power of P_c, as determined in the above steps. (-5,1 dB is the same as E_c /1,8.);

   j-2) Record the new forward power delivered to the antenna;

   j-3) Subtract the forward power measured in step j-2 from P_c. If the difference is between 3,1 and 5,1 dB, then the amplifier is not saturated and the test system sufficient for testing. If the difference is less than 3,1 dB, then the amplifier is saturated and is not suitable for testing.

NOTE 1 If at a specific frequency, the ratio between E_c and E_t is R(dB), where R = 20 log(E_c/E_t), then the test power $P_t = P_c - R$(dB). The subscripts c and t refer to calibration and test respectively. The field is modulated in accordance with Clause 8.

A description of an example for the calibration is given in D.4.1.

NOTE 2 At each frequency it has to be ensured that the amplifier used is not saturated. This can best be done by checking the 1 dB compression of the amplifier. However, the 1 dB compression of the amplifier is verified with a 50 Ω termination when the impedance of an antenna to be used for the test is different from 50 Ω. The saturation of the test system is assured by confirming the 2 dB compression point described to step j). For more information refer to the Annex D.

6.2.2 Constant power calibration method

The field strength of the uniform field shall be established and measured via a calibrated field sensor at each particular frequency and at each of the 16 points one after the other (see Figure 4) using the step size given in Clause 8, by adjusting the forward power accordingly.

The forward power necessary to establish the field strength at the starting position shall be measured in accordance with Figure 7 and noted. The same forward power shall be applied for all 16 positions. The field strength created by this forward power is to be recorded at each of the 16 points.

Procedure to be followed at both horizontal and vertical polarisations:

a) Position the sensor at one of the 16 points in the grid (see Figure 4), and set the frequency of the signal generator output to the lowest frequency in the range of the test (for example 80 MHz).

b) Apply a forward power to the field-generating antenna so that the field strength obtained equals E_c (taking into account that the test field will be modulated). Record the forward power and field strength readings.

c) Increase the frequency by a maximum of 1% of the present frequency.

d) Repeat steps b) and c) until the next frequency in the sequence would exceed the highest frequency in the range of the test. Finally, repeat step b) at this highest frequency (for example 1 GHz).

e) Move the sensor to another position in the grid. At each of the frequencies and used in steps a) to d), apply the forward power recorded in step b) for that frequency, and record the field strength reading.

f) Repeat step e) for each point in the grid.

At each frequency :

g) Sort the 16 field strength readings into ascending order.

h) Select one field strength as the reference and calculate the deviation from this reference for all other positions in decibels.

i) Start at the lowest value of the field strength and check if at least 11 readings above this value are within the tolerance of $^{-0}_{+6}$ dB of that lowest value.

j) If they are not within the tolerance of $^{-0}_{+6}$ dB, go back to the same procedure, starting by the reading immediately above and so on (notice that there are only five possibilities for each frequency).

k) Stop the procedure if at least 12 numbers are within 6 dB and take from these numbers the position where the minimum field strength was obtained as the reference.

l) Calculate the forward power necessary to create the required field strength in the reference position. Denote this forward power by P_c.

m) Confirm that the test system (e. g. the power amplifier) is not in saturation. Assuming that E_c has been chosen as 1,8 times E_t, perform the following procedure at each calibration frequency:

   m-1) Decrease the output from the signal generator by 5,1 dB from the level needed to establish a forward power of P_c, as determined in the above steps. (-5,1 dB is the same as E_c /1,8.)

   m-2) Record the new forward power delivered to the antenna.

   m-3) Subtract the forward power measured in step m-2 from P_c. If the difference is between 3,1 dB and 5,1 dB, then the amplifier is not saturated and the test system is sufficient for testing. If the difference is less than 3,1 dB, then the amplifier is saturated and is not suitable for testing.

NOTE 1 If at a specific frequency, the ratio between E_c and E_t is $R(dB)$, where $R = 20 \log(E_c/E_t)$, then the test power $P_t = P_c - R(dB)$. The subscripts c and t refer to calibration and test respectively. The field is modulated in accordance with Clause 8.

A description of an example for the calibration is given in D.4.2.

NOTE 2 At each frequency it has to be ensured that the amplifier used is not saturated. This can best be done by checking the 1 dB compression of the amplifier. However, the 1 dB compression of the amplifier is verified with a 50 Ω termination when the impedance of an antenna to be used for the test is different from 50 Ω. The saturation of the test system is assured by confirming the 2 dB compression point described to step m). For more information refer to the Annex D.

7 Test setup

All testing of equipment shall be performed in a configuration as close as possible to actual installation conditions. Wiring shall be consistent with the manufacturer's recommended procedures, and the equipment shall be in its housing with all covers and access panels in place, unless otherwise stated.

If the equipment is designed to be mounted in a panel, rack or cabinet, it shall be tested in this configuration.

A metallic ground plane is not required. When a means is required to support the test sample, it shall be constructed of a non-metallic, non-conductive material. Low dielectric constant (low permittivity) materials, such as rigid polystyrene, should be considered. However, grounding of housing or case of the equipment shall be consistent with the manufacturer's installation recommendations.

When an EUT consists of floor-standing and table-top components, the correct relative positions shall be maintained.

Typical EUT setups are shown in Figures 5 and 6.

NOTE 1 Non-conductive supports are used to prevent accidental earthing of the EUT and distortion of the field. To ensure the latter, the support should be bulk non-conductive, rather than an insulating coating on a metallic structure.

NOTE 2 At higher frequencies (e.g., above 1 GHz), tables or supports made from wood or glass reinforced plastic can be reflective. So, a low dielectric constant (low permittivity) material, such as rigid polystyrene, should be used to avoid field perturbations and to reduce degradation of field uniformity.

7.1 Arrangement of table-top equipment

The equipment to be tested is placed in the test facility on a non-conductive table 0,8 m high.

The equipment is then connected to power and signal wires according to relevant installation instructions.

7.2 Arrangement of floor-standing equipment

Floor-standing equipment should be mounted on a non-conductive support 0,05 m to 0,15 m above the supporting plane. The use of non-conductive supports prevents accidental earthing of the EUT and distortion of the field. To ensure the latter, the support shall be bulk non-conducting, rather than an insulating coating on a metallic structure. Floor-standing equipment which is capable of being stood on a non-conductive 0,8 m high platform, i.e. equipment which is not too large or heavy, or where its elevation would not create a safety hazard, may be so arranged. This variation in the standard method of test shall be recorded in the test report.

NOTE Non-conductive rollers may be used as the 0,05 m to 0,15 m support.

The equipment is then connected to power and signal wires according to relevant installation instructions.

7.3 Arrangement of wiring

Cables shall be attached to the EUT and arranged on the test site according to the manufacturer's installation instructions and shall replicate typical installations and use as much as possible.

The manufacturer's specified wiring types and connectors shall be used. If the wiring to and from the EUT is not specified, unshielded parallel conductors shall be used.

If the manufacturer's specification requires a wiring length of less than or equal to 3 m, then the specified length shall be used. If the length specified is greater than 3 m or is not specified, then the length of cable used shall be chosen according to typical installation practices. If possible, a minimum of 1 m of cable is exposed to the electromagnetic field. Excess length of cables interconnecting units of the EUT shall be bundled low-inductively in the approximate center of the cable to form a bundle 30 cm to 40 cm in length.

If a product committee determines excess cable length needs to be decoupled (for example, for cables leaving the test area), then the decoupling method used shall not impair the operation of the EUT.

7.4 Arrangement of human body-mounted equipment

Human body-mounted equipment (see Definition 3.13) may be tested in the same manner as table top items. However, this may involve over-testing or under-testing because the characteristics of the human body are not taken into account. For this reason, product committees are encouraged to specify the use of a human body simulator with appropriate dielectric characteristics.

8 Test procedure

The test procedure includes:

- the verification of the laboratory reference conditions;
- the preliminary verification of the correct operation of the equipment;
- the execution of the test;
- the evaluation of the test results.

8.1 Laboratory reference conditions

In order to minimize the effect of environmental parameters on test results, the test shall be carried out in climatic and electromagnetic reference conditions as specified in 8.1.1 and 8.1.2.

8.1.1 Climatic conditions

Unless otherwise specified by the committee responsible for the generic or product standard, the climatic conditions in the laboratory shall be within any limits specified for the operation of the EUT and the test equipment by their respective manufacturers.

Tests shall not be performed if the relative humidity is so high as to cause condensation on the EUT or the test equipment.

NOTE Where it is considered that there is sufficient evidence to demonstrate that the effects of the phenomenon covered by this standard are influenced by climatic conditions, this should be brought to the attention of the committee responsible for this standard.

8.1.2 Electromagnetic conditions

The electromagnetic conditions of the laboratory shall be such to guarantee the correct operation of the EUT in order not to influence the test results.

8.2 Execution of the test

The test shall be carried out on the basis of a test plan that shall include the verification of the performances of the EUT as defined in the technical specification.

The EUT shall be tested in normal operating conditions.

The test plan shall specify:

- the size of the EUT;
- representative operating conditions of the EUT;
- whether the EUT shall be tested as table-top or floor-standing, or a combination of the two;
- for floor-standing equipment, the height of the support;
- the type of test facility to be used and the position of the radiating antennas;
- the type of antennas to be used;
- the frequency range, dwell time and frequency steps;
- the size and shape of the uniform field area;
- whether any partial illumination is used;
- the test level to be applied;
- the type(s) and number of interconnecting wires used and the interface port (of the EUT) to which these are to be connected;
- the performance criteria which are acceptable;
- a description of the method used to exercise the EUT.

The test procedures described in this clause are for the use of field generating antennas as defined in Clause 6.

Before testing the intensity of the calibrated field strength should be checked to verify that the test equipment/system is operating properly.

After the calibration has been verified, the test field can be generated using the values obtained from the calibration (see 6.2).

The EUT is initially placed with one face coincident with the calibration plane. The EUT face being illuminated shall be contained within the UFA unless partial illumination is being applied. See Clause 6.2 regarding field calibration and use of partial illumination.

The frequency ranges to be considered are swept with the signal modulated according to 5.1 and 5.2, pausing to adjust the RF signal level or to switch oscillators and antennas as necessary. Where the frequency range is swept incrementally, the step size shall not exceed 1 % of the preceding frequency value.

The dwell time of the amplitude modulated carrier at each frequency shall not be less than the time necessary for the EUT to be exercised and to respond, but shall in no case be less than 0,5 s. The sensitive frequencies (e.g., clock frequencies) shall be analyzed separately according to the requirements in product standards.

The test shall normally be performed with the generating antenna facing each side of the EUT When equipment can be used in different orientations (i.e. vertical or horizontal) all sides shall be exposed to the field during the test. When technically justified, some EUTs can be tested by exposing fewer faces to the generating antenna. In other cases, as determined for example by the type and size of EUT or the frequencies of test, more than four azimuths may need to be exposed.

NOTE 1 As the electrical size of the EUT increases, the complexity of its antenna pattern also increases. The antenna pattern complexity can affect the number of test orientations necessary to determine minimum immunity.

NOTE 2 If an EUT consists of several components, it is not necessary to modify the position of each component within the EUT while illuminating it from different sides.

The polarization of the field generated by each antenna necessitates testing each selected side twice, once with the antenna positioned vertically and again with the antenna positioned horizontally.

Attempts shall be made to fully exercise the EUT during testing, and to interrogate all the critical exercise modes selected for the immunity test. The use of special exercising programmes is recommended.

9 Evaluation of test results

The test results shall be classified in terms of the loss of function or degradation of performance of the equipment under test, relative to a performance level defined by its manufacturer or the requestor of the test, or agreed between the manufacturer and the purchaser of the product. The recommended classification is as follows:

a) normal performance within limits specified by the manufacturer, requestor or purchaser;

b) temporary loss of function or degradation of performance which ceases after the disturbance ceases, and from which the equipment under test recovers its normal performance, without operator intervention;

c) temporary loss of function or degradation of performance, the correction of which requires operator intervention;

d) loss of function or degradation of performance which is not recoverable, owing to damage to hardware or software, or loss of data.

The manufacturer's specification may define effects on the EUT which may be considered insignificant, and therefore acceptable.

This classification may be used as a guide in formulating performance criteria, by committees responsible for generic, product and product-family standards, or as a framework for the agreement on performance criteria between the manufacturer and the purchaser, for example where no suitable generic, product or product-family standard exists.

10 Test report

The test report shall contain all the information necessary to reproduce the test. In particular, the following shall be recorded:

- the items specified in the test plan required by Clause 8 of this standard;
- identification of the EUT and any associated equipment, for example, brand name, product type, serial number;

- identification of the test equipment, for example, brand name, product type, serial number;
- any special environmental conditions in which the test was performed;
- any specific conditions necessary to enable the test to be performed;
- performance level defined by the manufacturer, requestor or purchaser;
- performance criterion specified in the generic, product or product-family standard;
- any effects on the EUT observed during or after the application of the test disturbance, and the duration for which these effects persist;
- the rationale for the pass/fail decision (based on the performance criterion specified in the generic, product or product-family standard, or agreed between the manufacturer and the purchaser);
- any specific conditions of use, for example cable length or type, shielding or grounding, or EUT operating conditions, which are required to achieve compliance;
- a complete description of the cabling and equipment position and orientation shall be included in the test report; in some cases a picture may be sufficient for that.

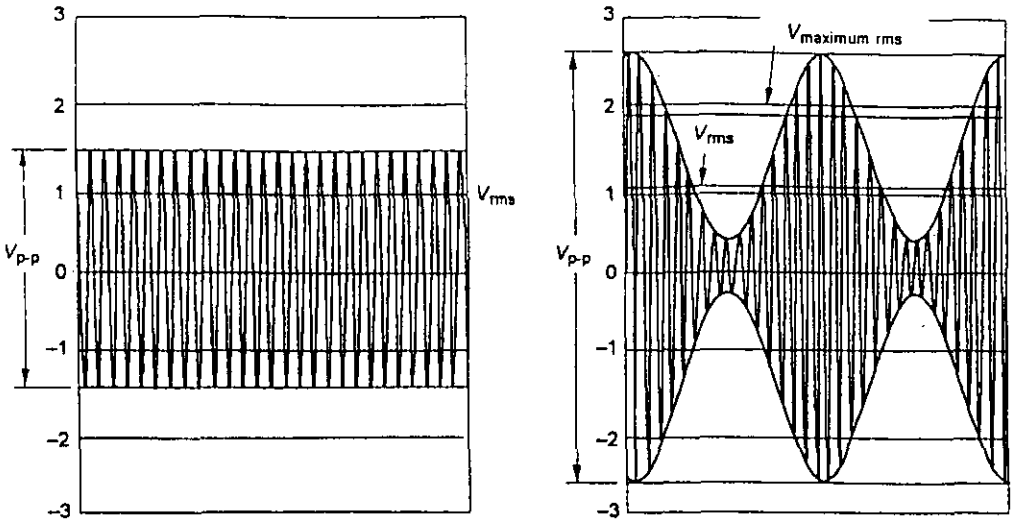

a) Unmodulated RF-signal
$V_{p\text{-}p}$ = 2,8 V
V_{rms} = 1,0 V

b) Modulated RF-signal 80 % AM
$V_{p\text{-}p}$ = 5,1 V
V_{rms} = 1,15 V
$V_{maximum\ rms}$ = 1,8 V

Figure 1 – Definition of the test level and the waveshapes occurring at the output of the signal generator

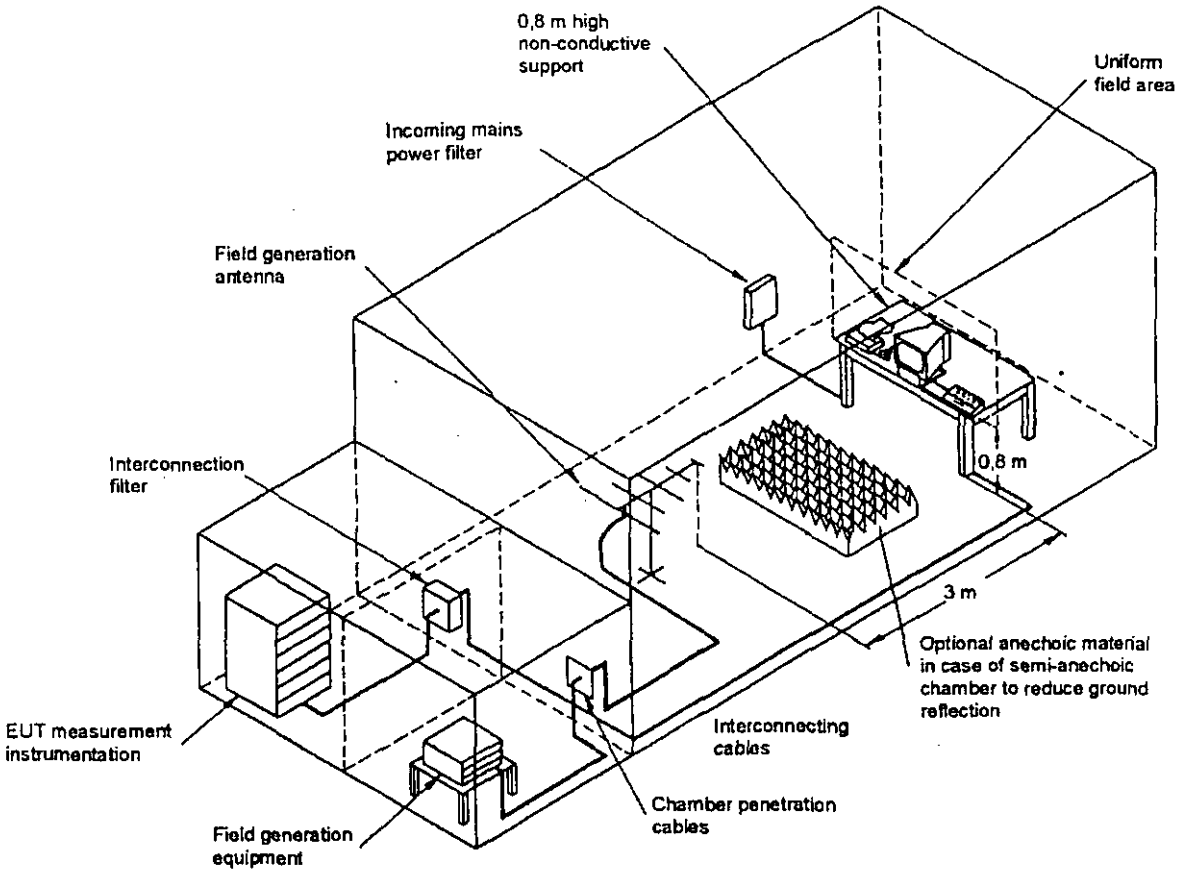

NOTE Anechoic lining material on walls and ceiling has been omitted for clarity.

Figure 2 – Example of suitable test facility

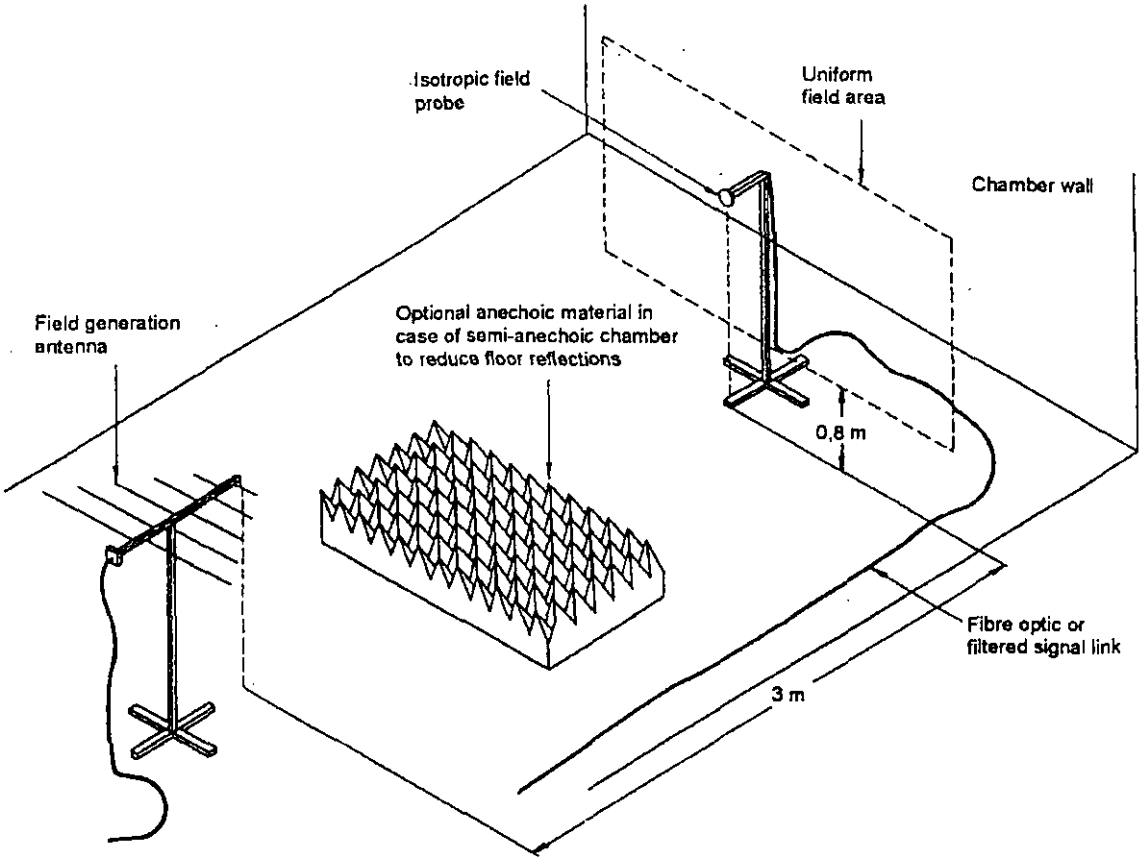

Figure 3 – Calibration of field

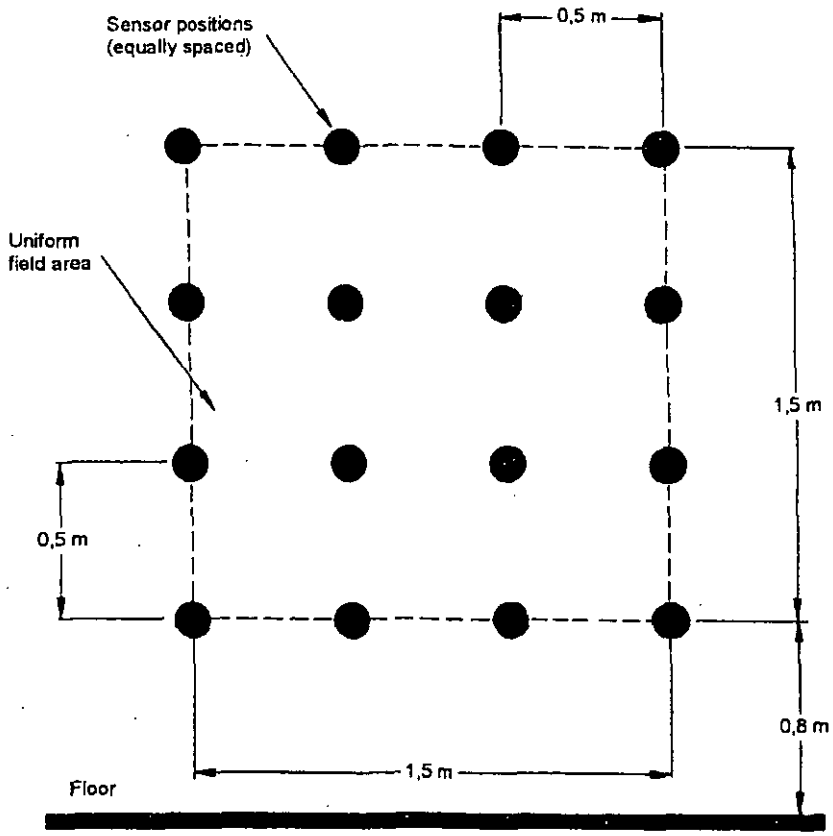

Figure 4 – Calibration of field, dimensions of the uniform field area

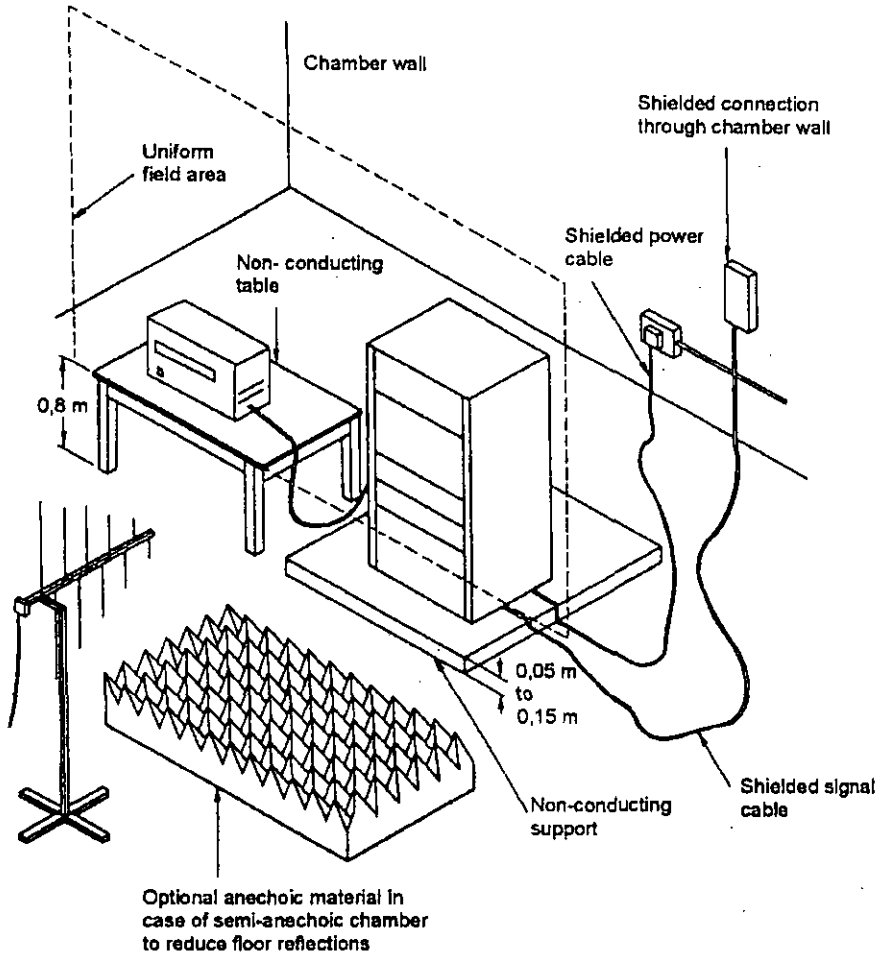

NOTE Anechoic lining material has been omitted from walls for clarity.

Figure 5 – Example of test setup for floor-standing equipment

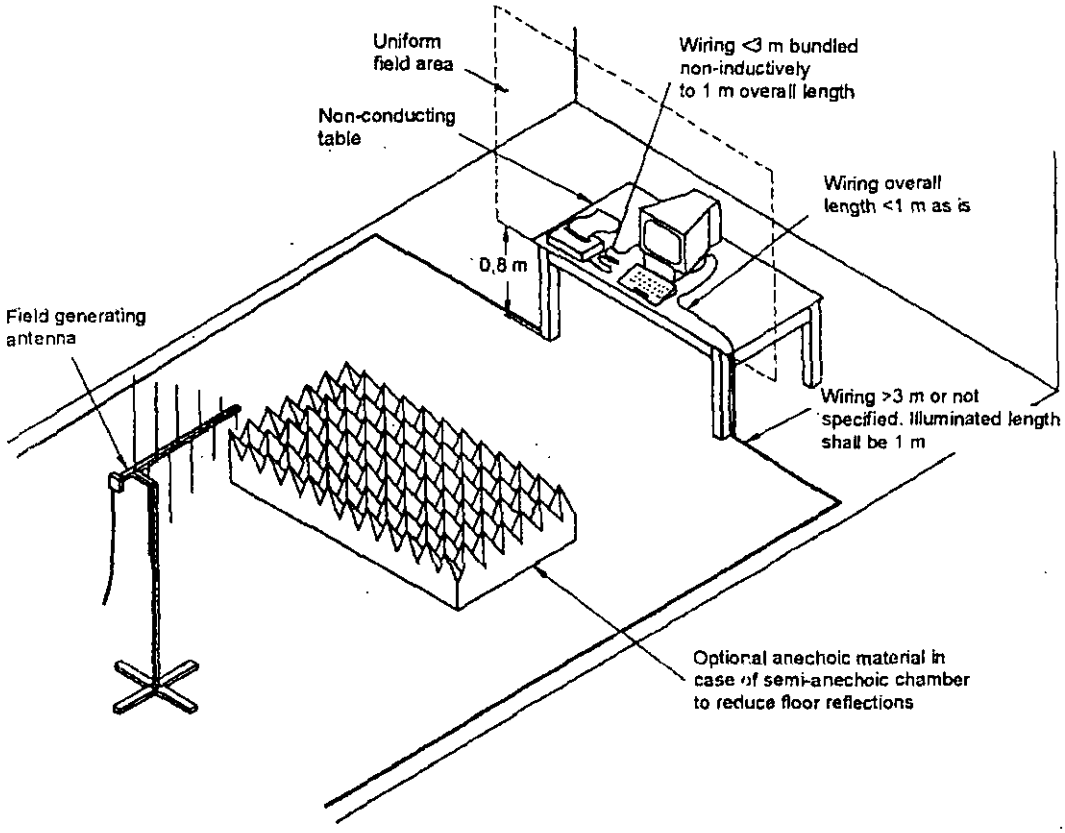

Figure 6 – Example of test setup for table-top equipment

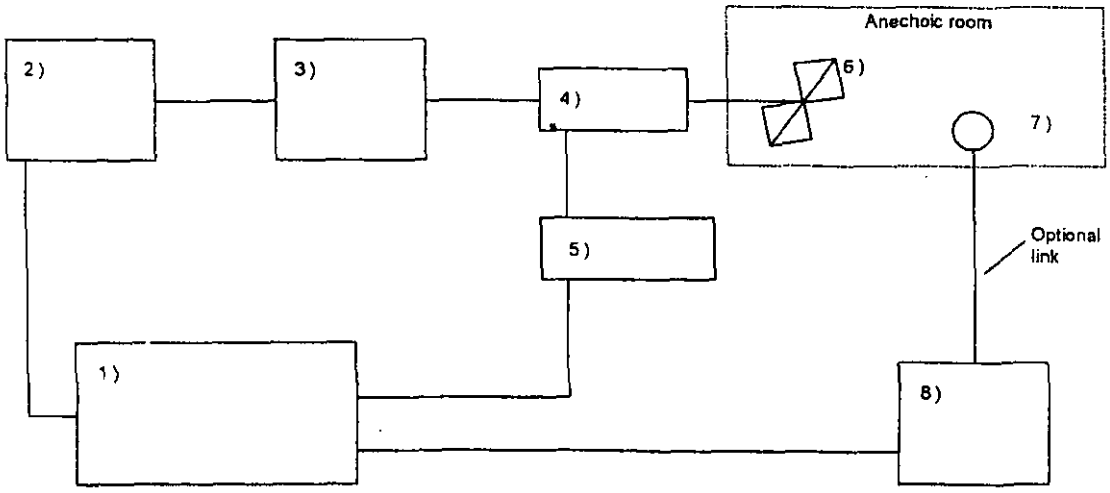

1) Controller, for example PC
2) Signal generator
3) Power amplifier
4) Directional coupler [a]
5) Measuring instrument [a]
6) Transmitting antenna
7) Field sensor
8) Field meter

[a] The directional coupler and power meter may be replaced by a forward power detector or monitor inserted between amplifier 3) and antenna 6).

Figure 7 – Measuring set-up

Annex A
(informative)

Rationale for the choice of modulation for tests related to the protection against RF emissions from digital radio telephones

A.1 Summary of available modulation methods

The essential threat above 800 MHz comes from digital radio telephones using non-constant envelope modulation. During the development of this standard, the following modulation methods were considered for the electromagnetic field:

- sine wave amplitude modulation, 80 % AM at 1 kHz rate;
- square wave amplitude modulation, 1:2 duty cycle, 100 % AM at 200 Hz rate;
- pulsed RF signal approximately simulating the characteristics of each system, e.g. 1:8 duty cycle at 200 Hz for GSM, 1:24 duty cycle at 100 Hz for DECT portables, etc. (see Annex G for definitions of GSM and DECT);
- pulsed RF signal simulating exactly the characteristics of each system, e.g. for GSM: 1:8 duty cycle at 200 Hz plus secondary effects such as discontinuous transmission mode (2 Hz modulation frequency) and multi-frame effects (8 Hz frequency component).

The merits of the respective systems are summarised in Table A.1.

Table A.1 – Comparison of modulation methods

(see Annex G for definitions of GSM and DECT)

Modulation method	Advantages	Disadvantages
Sine wave AM	1 Experimentation has shown that good correlation may be established between the interfering effects of different types of non-constant envelope modulation provided the maximum RMS levels remains the same. 2 It is not necessary to specify (and measure) the rise time of the TDMA pulse. 3 Used in this standard and in IEC 61000-4-6. 4 Field generation and monitoring equipment is readily available. 5 For analogue audio equipment, demodulation in the equipment under test produces an audio response which can be measured with a narrow band level meter, thereby reducing background noise. 6 Has already been shown to be effective at simulating the effects of other modulation types (e.g. FM, phase modulation, pulse modulation) at lower frequencies.	1 Does not simulate TDMA. 2 Slight over-test for second law receptors. 3 May miss some failure mechanisms.
Square wave AM	1 Similar to TDMA. 2 Can be applied universally. 3 May reveal "unknown" failure mechanisms (sensitive to the large rate of change of the RF envelope).	1 Does not exactly simulate TDMA. 2 Requires non-standard equipment to generate the signal. 3 Demodulation in EUT produces a broad-band audio response which shall be measured with a broadband level meter, thereby raising background noise. 4 Necessary to specify the rise time.
Pulsed RF	1 Good simulation of TDMA. 2 May reveal "unknown" failure mechanisms (sensitive to the large rate of change of the RF envelope).	1 Requires non-standard equipment to generate the signal. 2 The details of the modulation need to be varied to match each of the different systems (e.g. GSM, DECT, etc.). 3 Demodulation in EUT produces a broad-band audio response which shall be measured with a broadband level meter, thereby raising background noise. 4 Necessary to specify the rise time.

A.2 Experimental results

A series of experiments has been performed to assess the correlation between the modulation method used for the disturbing signal and the interference produced.

The modulation methods investigated were as follows:

a) sine wave 80 % AM at 1 kHz;

b) "GSM-like" pulsed RF, duty cycle 1:8 at 200 Hz;

c) "DECT-like" pulsed RF, duty cycle 1:2 at 100 Hz (base station);

d) "DECT-like" pulsed RF, duty cycle 1:24 at 100 Hz (portable).

Only one of the "DECT-like" modulations was used in each case.

The results are summarised in Tables A.2 and A.3.

Table A.2 – Relative interference levels [a]

Modulation method [b]		Sine wave 80 % AM at 1 kHz	"GSM-like" duty cycle 1:8 at 200 Hz	"DECT-like" duty cycle 1:24 at 100 Hz
↓ Equipment	↓ Audio response	dB	dB	dB
Hearing aid [c]	Unweighted 21 Hz – 21 kHz	0 [d]	0	−3
	A-weighted	0	−4	−7
Analogue telephone set [e]	Unweighted	0 [d]	−3	−7
	A-weighted	−1	−6	−8
Radio set [f]	Unweighted	0 [d]	+1	−2
	A-weighted	−1	−3	−7

[a] The audio response to the disturbance is the interference level. A low interference level means a high-immunity level.

[b] Important: the carrier amplitude is adjusted so that the maximum RMS value (see Clause 3) of the disturbing signal (exposure) is the same for all modulations.

[c] The exposure is produced by an incident electromagnetic field at 900 MHz. The duty cycle for the DECT-like modulation is 1:2 instead of 1:24. The audio response is the acoustical output measured with an artificial ear connected via a 0,5 m PVC tube.

[d] This case is chosen as the reference audio response, i.e. 0 dB.

[e] The exposure is an RF current injected into the telephone cable at 900 MHz. The audio response is the audio-frequency voltage measured on the telephone line.

[f] The exposure is an RF current injected into the mains cable at 900 MHz. The audio response is the audio output from the loudspeaker measured with a microphone.

Table A.3 – Relative immunity levels [a]

Modulation method [b]		Sine wave 80 % AM at 1 kHz	"GSM-like" duty cycle 1:8 at 200 Hz	"DECT-like" duty cycle 1:24 at 100 Hz
↓ Equipment	↓ Response	dB	dB	dB
TV set [c]	Noticeable interference	0 [d]	−2	−2
	Strong interference	+4	+1	+2
	Screen off	~+19	+18	+19
Data terminal with RS232 interface [e]	Interference on the video screen	0 [d]	0	–
	Data errors	> +16	> +16	–
RS232 modem [f]	Data errors (injected on telephone interface)	0 [d]	0	0
	Data errors (injected on RS232 interface)	> +9	> +9	> +9
Regulated laboratory supply [g]	2 % error in DC output current	0 [d]	+3	+7
SDH cross connect [h]	Bit error threshold	0 [d]	0	–

[a] The numbers in the table are a relative measure of the maximum RMS level (see Clause 3) of the disturbing signal (exposure) necessary to produce the same degree of interference with all modulations. A high decibel level means high immunity.

[b] The disturbing signal is adjusted so that the same response (interference) is produced with all modulations.

[c] The exposure is an RF current injected into the mains cable at 900 MHz. The response is the degree of interference produced on the screen. The assessment is rather subjective as the interference patterns are different for the different cases.

[d] This case is chosen as the reference immunity level, i.e. 0 dB.

[e] The exposure is an RF current injected into the RS232 cable at 900 MHz.

[f] The exposure is an RF current injected into either the telephone or the RS232 cable at 900 MHz.

[g] The exposure is an RF current at 900 MHz injected into the d.c..output cable.

[h] SDH = synchronous digital hierarchy. The exposure is an incident electromagnetic field at 935 MHz.

The following items of digital equipment were tested using both sine wave AM and pulse modulation (duty cycle 1:2) at field strengths of up to 30 V/m:

- hand dryer with microprocessor control;
- 2 Mb modem with 75 Ω coaxial cable;
- 2 Mb modem with 120 Ω twisted pair cable;
- industrial controller with microprocessor, video display and RS485 interface;
- train display system with microprocessor;
- credit card terminal with modem output;
- digital multiplexer 2/34 Mb;
- Ethernet repeater (10 Mb/s).

All failures were associated with the analogue functions of the devices.

A.3 Secondary modulation effects

When trying to simulate exactly the modulation used in a digital radio telephone system, it is important not only to simulate the primary modulation but also to consider the impact of any secondary modulation which may be present.

For example, with GSM and DCS 1800, there are multi-frame effects caused by the suppression of a burst every 120 ms (thereby creating a frequency component at approximately 8 Hz). There may also be additional modulation at 2 Hz from the optional discontinuous transmission (DTX) mode.

A.4 Conclusion

It can be seen from the cases studied that the items tested responded to the disturbances independently of the modulation method used. When comparing the effects of different modulations, it is important to ensure that the same maximum RMS level of interfering signal is used.

Where significant differences existed between the effects of different modulation types, sine wave AM was always the most severe.

Where different responses are observed for sine wave modulation and TDMA, the product specific difference may be corrected by appropriate adjustment of the compliance criteria in the product standard.

In summary, sine wave modulation has the following advantages:

- narrow band detection response in analogue systems reducing background noise problems;
- universal applicability, i.e. no attempt to simulate the behaviour of the disturbing source;
- same modulation at all frequencies;
- always at least as severe as pulse modulation.

For the reasons stated above, the modulation method defined in this standard is 80 % AM sine wave. It is recommended that product committees change the modulation method only if there are specific reasons requiring a different type of modulation.

Annex B
(informative)

Field generating antennas

B.1 Biconical antenna

This antenna consists of a coaxial balun and three-dimensional element which provide a broad frequency range and can be used both for transmitting and receiving. The antenna factor curve is a substantially smooth line, typically increasing with frequency.

The compact size of these antenna makes them ideal for use in restricted areas such as anechoic chambers as proximity effects are minimized.

B.2 Log-periodic antenna

A log-periodic antenna is an array of dipoles of different lengths connected to a transmission line.

These broadband antennas have a relatively high gain and low VSWR.

When choosing an antenna for the generation of fields, it should be established that the balun can handle the necessary power.

B.3 Horn antenna and double ridge wave guide antenna

Horn antennas and double ridge wave guide antennas produce linearly polarised electromagnetic fields. They are typically used at frequencies above 1 000 MHz.

Annex C
(informative)

Use of anechoic chambers

C.1 General anechoic chamber information

A semi-anechoic chamber is a shielded enclosure having radio absorbing material on the walls and ceiling. Anechoic chambers also have such lining on the floor.

The purpose of this lining is to absorb the RF energy, preventing reflections back into the chamber. Such reflections, by interfering in a complex way with the directly radiated field, can produce maxima and minima in the intensity of the generated field.

The reflection loss of the absorbing material generally depends on the frequency of the incident wave and its angle to the normal. The loss (absorption) is typically greatest at normal incidence and decreases as the angle of incidence increases.

In order to break up reflections and enhance absorption, the absorbing material is often shaped into wedges or cones.

For semi-anechoic chambers, modification by the addition of extra RF absorbing material on the floor helps to achieve the required field uniformity at all frequencies. Experimentation will reveal the materials and positions for such additions.

The additional absorbing material should not be placed in the direct illumination path from the antenna to the EUT, but should be positioned in the identical location and orientation for testing as used during the calibration procedure.

Uniformity can also be improved by placing the field generating antenna off the axis of the chamber, such that any reflections are not symmetrical.

Anechoic chambers are less effective at low frequencies (below 30 MHz), whereas ferrite-lined chambers may also be less effective at frequencies above 1 GHz. Care shall be taken to ensure the uniformity of the generated field at the lowest and highest frequencies, and it may be necessary to rework the chamber.

C.2 Suggested adjustments to adapt for use at frequencies above 1 GHz ferrite-lined chambers designed for use at frequencies up to 1 GHz

Most of the existing small anechoic chambers which use ferrite as an absorber are designed for use at frequencies up to 1 GHz. At frequencies above 1 GHz, it may be difficult or impossible for such chambers to satisfy the field uniformity requirement of 6.2 of this standard.

This paragraph presents information on the procedures to adapt such chambers for testing at frequencies above 1 GHz using the method described in Annex H.

C.2.1 Problems caused by the use of ferrite-lined chambers for radiated field immunity tests at frequencies above 1 GHz

The problem described below may occur, for example, in a small ferrite-lined anechoic chamber, or in a small (typically 7 m (*l*) × 3 m (*w*) × 3 m (*h*)) anechoic chamber lined with a combination of ferrite and carbon-loaded absorbers.

At frequencies above 1 GHz, the ferrite tiles usually behave as reflectors rather than as absorbers. It is very difficult to establish a uniform field over a 1,5 m × 1,5 m area at these frequencies owing to multiple reflections from the inner surfaces of the chamber (see Figure C.1).

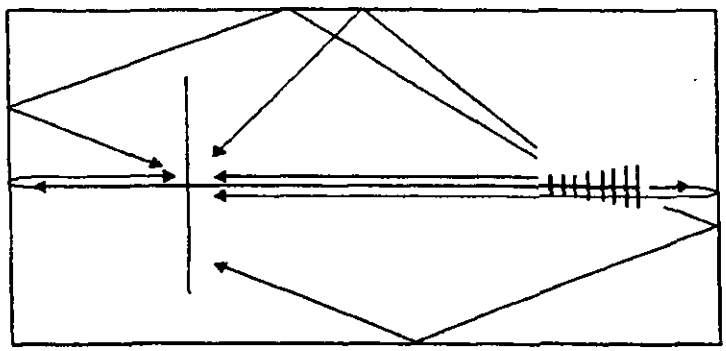

Figure C.1 – Multiple reflections in an existing small anechoic chamber

At the frequencies of the radio telephone bands, the wavelength is shorter than 0,2 m. This means that test results are very sensitive to the positioning of the field-generating antenna and the field sensor or EUT.

C.2.2 Possible solution

In order to solve existing problems, the following procedures are suggested.

a) Use a horn antenna or a double-ridge wave guide antenna to reduce the field radiated backwards. This also decreases reflections from the side walls of the chamber because of the narrow beam width of the antenna.

b) Shorten the distance between the transmitting antenna and EUT to minimize reflections from the side walls (the distance between the antenna and EUT can be reduced to 1 m). Use the method of 0,5 m × 0,5 m independent windows (Annex H) to ensure that the EUT is exposed to a uniform field.

c) Attach medium-loaded carbon type anechoic material to the rear wall facing the EUT to eliminate direct reflection. This reduces the sensitivity of the test to the positioning of the EUT and antenna. It also may improve field uniformity at frequencies below 1 GHz.

NOTE If a highly-loaded carbon type anechoic material is used, it may be difficult to satisfy the requirement for field uniformity at frequencies below 1 GHz.

Following the above procedures will eliminate most of the reflected waves (see Figure C.2).

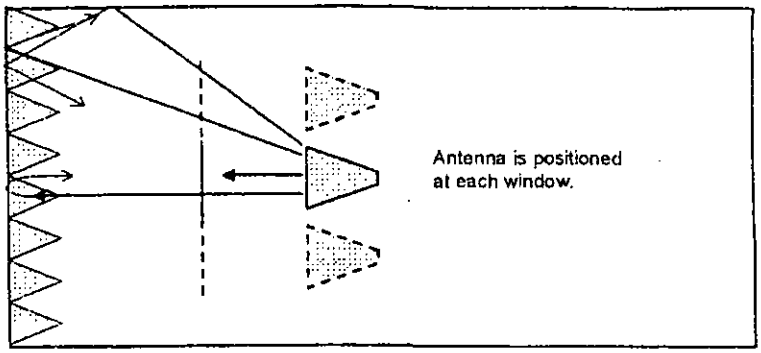

Figure C.2 – Most of the reflected waves are eliminated

Annex D
(informative)

Amplifier non-linearity and example for the calibration procedure according to 6.2

D.1 Objective of limiting amplifier distortion

The goal is to keep amplifier non-linearity at a level low enough such that it does not dominate the uncertainty of the value of the field strength. Consequently, a guideline is given to assist test laboratories in understanding and limiting amplifier saturation effects.

D.2 Possible problems caused by harmonics and saturation

Overloading the amplifier may result in the following scenarios.

a) The harmonics may contribute significantly to the field.

   1) If this occurs during calibration, the field strength at the intended frequency is incorrectly measured, as the broadband field probe will measure the fundamental and its harmonics. For example, assume that the third harmonic is 15 dB below the fundamental frequency at the antenna terminal and all other harmonics can be ignored. Further assume that the effective antenna factor is 5 dB lower at the frequency of the third harmonic than at the fundamental frequency. The field strength of the fundamental frequency will be only 10 dB larger than the field strength of the third harmonic. If a total field strength of 10 V/m is measured, the fundamental frequency will contribute 9,5 V/m. This is an acceptable error, as it is smaller than the field probe amplitude uncertainty.

   2) If harmonics are significantly present during a test, they may cause an EUT failure although the EUT is robust at the intended fundamental frequency but not robust at the harmonic frequency.

b) Harmonics may also affect the test result, even if they are very well suppressed in special situations. For example, if a 900 MHz receiver is tested, even very weak harmonics of a 300 MHz signal may overload the receiver input. A similar scenario may also occur if the signal generator outputs non-harmonically-related signals.

c) Saturation may be present without measurable harmonics. This occurs if the amplifier has a low pass output filter which suppresses the harmonics. This situation may also lead to incorrect results.

   1) If this occurs during calibration, wrong calibration data will be derived as the assumption of linearity is used in the algorithm described in 6.2.

   2) During a test, this type of saturation will lead to an incorrect modulation index and harmonics of the modulation frequency (usually 1 000 Hz).

From the examples given above, it is clear that a numerical limit for amplifier distortion can not be given, as the effect of distortion depends heavily on the type of EUT tested.

D.3 Options for controlling amplifier non-linearity

D.3.1 Limiting the harmonic content in the field

The harmonic content of the field can be limited with the use of an adjustable/tracking/tunable low-pass filter at the output of the amplifier.

For all frequencies where harmonics are produced at the output of the amplifier, the rejection of these harmonics in the field by more than 6 dB below the fundamental is adequate, with exception of the scenario discussed in D.2 b).

This would limit the field strength error to 10 %. For example, a 10 V/m signal measured broadband would be caused by 9 V/m from the fundamental and 4,5 V/m from the harmonics. This is a situation which is acceptable for calibration uncertainty.

For amplifiers containing a fixed low-pass filter in their output, the upper fundamental frequency concerned is about 1/3 of the maximum specified frequency of the amplifier.

D.3.2 Measuring the harmonic content of the field

The harmonic content of the field can be either be measured directly using a selective field probe or indirectly by

- determining first the effective antenna factor (the ratio between input power and field strength for a given chamber and antenna position) and then the ratio between the forward powers at the fundamental frequency and the harmonics or
- with a coupler by taking account of the antenna factor at the harmonics as provided by the antenna manufacturer.

For situations in which a low-pass filter suppresses harmonics of a saturated amplifier it is suggested under no circumstances (for example worst frequency, maximum field strength with modulation) to exceed the 2 dB compression point of the amplifier. At the 2 dB compression point, the peak amplitude (in voltage) would be reduced by 20 %. This would cause a reduction of the 80 % modulation index down to 64 %, in other words, a 20 % reduction of a voltage rectified within the EUT.

D.4 Examples showing the equivalence of the two calibration methods

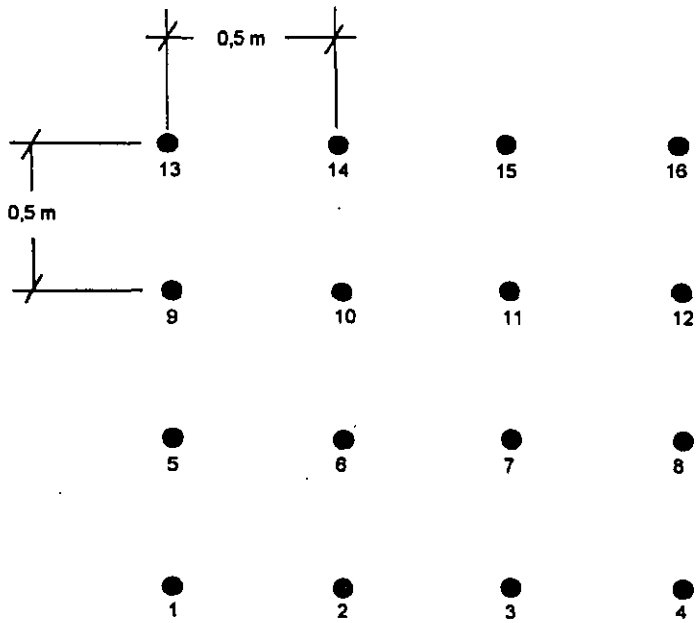

Figure D.1 – Measuring positions of the uniform field area

Figure D.1 shows the 16 positions where the field uniformity has to be measured. The distance between each of the 16 points has been fixed at 0,5 m.

D.4.1 Example for the calibration procedure using the constant field strength calibration method as described in 6.2.1

To create a constant field strength of E_c = 6 V/m (as an example) the following forward power values shown in Table D.1 have been measured at one particular frequency using the measuring setup according to Figure 7.

Table D.1 – Forward power values measured according to the constant field strength calibration method

Position	Forward power dBm
1	27
2	22
3	37
4	33
5	31
6	29
7	23
8	27
9	28
10	30
11	30
12	31
13	40
14	30
15	31
16	31

Table D.2 – Forward power values sorted according to rising value and evaluation of the measuring result

Position	Forward power dBm
2	22
7	23
1	27
8	27
9	28
6	29
10	30
11	30
14	30
5	31
12	31
15	31
16	31
4	33
3	37
13	40

NOTE
Position 13 : 40 - 6 = 34, only 2 positions comply.
Position 3 : 37 – 6 = 31, only 6 positions comply.
Position 4 : 33 – 6 = 27, 12 positions comply.

In this example the measuring points 2, 3, 7 and 13 lie outside the $^{-0}_{+6}$ dB criterion but at least (in this example) 12 out of 16 points are within the criterion. Thus, at this particular frequency, the criterion is fulfilled. In this case, the forward power to be applied is 33 dBm. This ensures that for the 12 points the field strength E_c is at least 6 V/m (position 4) and at most 12 V/m (positions 1 and 8).

D.4.2 Example for the calibration procedure using the constant power calibration method as described in 6.2.2

Point No. 1 has been chosen as a first calibration point, where a target field strength E_c of 6 V/m has been produced. At the same forward power, the following field strengths shown in Table D.3 have been recorded at one particular frequency using the measuring setup according to Figure 7.

Table D.3 – Forward power and field strength values measured according to the constant power calibration method

Position	Forward power dBm	Field strength V/m	Field strength dB relative to position 1
1	27	6,0	0
2	27	10,7	5
3	27	1,9	–10
4	27	3,0	–6
5	27	3,8	–4
6	27	4,8	–2
7	27	9,5	4
8	27	6,0	0
9	27	5,3	–1
10	27	4,2	–1
11	27	4,2	–3
12	27	3,8	–4
13	27	1,3	–13
14	27	4,2	–3
15	27	3,8	–4
16	27	3,8	–4

Table D.4 – Field strength values sorted according to rising value and evaluation of the measuring result

Position	Forward power dBm	Field strength V/m	Field strength dB relative to position 1
13	27	1,3	–13
3	27	1,9	–10
4	27	3,0	–6
5	27	3,8	–4
12	27	3,8	–4
15	27	3,8	–4
16	27	3,8	–4
10	27	4,2	–3
11	27	4,2	–3
14	27	4,2	–3
6	27	4,8	–2
9	27	5,3	–1
1	27	6,0	0
8	27	6,0	0
7	27	9,5	4
2	27	10,7	5

NOTE
Position 13 : –13 + 6 = –7, only 2 positions comply.
Position 3 : –10 + 6 = –4, only 6 positions comply.
Position 4 : –6 + 6 = 0, 12 positions comply.

In this example the measuring points 13, 3, 7 and 2 lie outside the $^{-0}_{+6}$ dB criterion but at least (in this example exactly) 12 out of 16 points are within the criterion. Thus at this particular frequency the criterion is fulfilled. In this case the forward power to be applied for the field strength E_c = 6 V/m is 27 dBm + 20 log (6 V/m/3 V/m) = 33 dBm. This ensures that for the 12 points the field strength E_c is at least 6 V/m (position 4) but in maximum 12 V/m (positions 1 and 8).

Annex E
(informative)

Guidance for product committees on the selection of test levels

E.1 Introduction

The transmitted power of radio transmitters is often specified in terms of ERP (effective radiated power) referred to a half-wave dipole. Therefore, the generated field strength, for the far field, can be directly obtained by the following dipole formula:

$$E = k \sqrt{P} / d \qquad \text{(Equation E.1)}$$

where

E is the field strength (RMS value) (V/m);

k is a constant, with a value of 7, for free-space propagation in the far field;

P is the power (ERP) (W);

d is the distance from the antenna (m).

Nearby reflecting and absorbing objects alter the field strength.

If the ERP of the transmitter is not known, the power provided to the antenna may be used in Equation E.1 instead. In this case, a value of k = 3 is typically applicable for mobile radio transmitters.

E.2 Test levels related to general purposes

The test levels and the frequency bands are selected in accordance with the electromagnetic radiation environment to which the EUT can be exposed when finally installed. The consequences of failure should be borne in mind in selecting the test level to be applied. A higher level should be considered if the consequences of failure are significant.

If the EUT is to be installed at only a few sites, then an inspection of local RF sources will enable a calculation of field strengths likely to be encountered. If the powers of the sources are not known, it may be possible to measure the actual field strengths at the location(s) concerned.

For equipment intended for operation in a variety of locations, the following guidance may be used in selecting the test level to be applied.

The following classes are related to the levels listed in Clause 5; they are considered as general guidelines for the selection of the corresponding levels.

- *Class 1:* Low-level electromagnetic radiation environment. Levels typical of local radio/television stations located at more than 1 km, and transmitters/receivers of low power.

- *Class 2:* Moderate electromagnetic radiation environment. Low power portable transceivers (typically less than 1 W rating) are in use, but with restrictions on use in close proximity to the equipment. A typical commercial environment.
- *Class 3:* Severe electromagnetic radiation environment. Portable transceivers (2 W rating or more) are in use relatively close to the equipment but not less than 1 m. High power broadcast transmitters are in close proximity to the equipment and ISM equipment may be located close by. A typical industrial environment.
- *Class 4:* Portable transceivers are in use within less than 1 m of the equipment. Other sources of significant interference may be within 1 m of the equipment.
- *Class x:* x is an open level which might be negotiated and specified in the product standard or equipment specification.

E.3 Test levels related to the protection against RF emissions from digital radio telephones

The test levels should be selected in accordance with the expected electromagnetic field, i.e. considering the power of the radio telephone equipment and the likely distance between its transmitting antenna and the equipment to be tested. Usually, mobile stations will give rise to more severe requirements than base stations (because mobiles tend to be located much closer to potentially susceptible devices than base stations).

The cost for establishing the required immunity and the consequences of failure should be borne in mind when selecting the test level to be applied. A higher level should only be considered if the consequences of failure are large.

Higher exposures than the selected test level may occur in practice with a lower rate of occurrence. In order to prevent unacceptable failures in those situations, it may be necessary to perform a second test at a higher level and accept a reduced performance (i.e. defined degradation accepted).

Table E.1 gives examples of test levels, performance criteria and the associated protection distances. The protection distance is the minimum acceptable distance to a digital radio telephone, when testing has been performed at the stated test level. These distances are calculated from Equation E.1, using k = 7 and assuming testing is carried out with an 80 % sinusoidal AM.

Table E.1 – Examples of test levels, associated protection distances and suggested performance criteria

Test level	Carrier field strength	Maximum RMS field strength	Protection distance for			Performance criteria [a]	
	V/m	V/m	2W GSM m	8W GSM m	¼W DECT m	Example 1 [b]	Example 2 [c]
1	1	1,8	5,5	11	1,9	–	–
2	3	5,4	1,8	3,7	0,6	a	–
3	10	18	0,6	1,1	~ 0,2 [d]	b	a
4	30	54	~ 0,2 [d]	0,4	~ 0,1 [d]	–	b

[a] According to Clause 9.
[b] Equipment for which the consequences of failure are not severe.
[c] Equipment for which the consequences of failure are severe.
[d] At these and closer distances, the far field Equation E.1 is not accurate.

The following issues were considered when formulating the above table:

- for GSM, most terminals on the market today are of class 4 (maximum ERP 2 W). A substantial number of mobile terminals in operation are classes 3 and 2 (maximum ERP 5 W and 8 W, respectively). The ERP of GSM terminals is often lower than maximum except in areas of poor reception;
- the coverage indoors is worse than outdoors, which implies that the ERP indoors may more often than not adjust to the maximum of the class. This is the worst case situation from an EMC point of view since most of the victim equipment is also concentrated indoors;
- as described in Annex A, the immunity level of an item of equipment is well correlated with the maximum RMS value of the modulated field. For that reason, the maximum RMS field strength has been inserted into Equation E.1 instead of the carrier field strength to calculate the protection distance;
- the estimated minimum distance for safe operation, also called protection distance, has been calculated with k = 7 in Equation E.1 and does not take into account the statistical fluctuations of the field strength, due to reflections from walls, floor and ceiling, which are on the order of ±6 dB;
- the protection distance according to Equation E.1 depends on the effective radiated power of the digital radio telephone and not on its operating frequency.

E.4 Special measures for fixed transmitters

The levels derived from the information in this Annex are typical values which are rarely exceeded in the described locations. At some locations these values will be exceeded e.g. radar installations, the proximity of high-power transmitters or ISM equipment located in the same building. In such cases, it may be preferable to shield the room or building and filter the signal and power wires to the equipment, rather than specify all equipment to be immune to such levels.

Annex F
(informative)

Selection of test methods

This standard and IEC 61000-4-6 define two methods for testing the immunity of electrical and electronic equipment against radiated electromagnetic energy.

In general, tests with conducted signals are more useful at lower frequencies, and tests with radiated signals more useful at higher frequencies.

There is a range of frequencies for which the test methods which appear in either standard are useable. It is possible to use the test method defined in IEC 61000-4-6 up to 230 MHz. It is also possible to use the test method defined in this part down to 26 MHz. The purpose of this annex is to provide a guide to product committees and product specification writers in the selection of the most appropriate test method to ensure repeatability, based on the design and type of EUT.

Consideration should be given to:

- the wavelength of the radiated field compared to the mechanical dimensions of the EUT;
- the relative dimensions of the cabinets and wires of the EUT;
- the number of wires and enclosures which constitute the EUT.

Annex G
(informative)

Description of the environment

G.1 Digital radio telephones

Tables G.1, G.2 and G.3 list radio system parameters relevant to EMC.

The abbreviations and definitions listed hereafter are used in the aforementioned tables:

- **CDMA (Code Division Multiple Access):** multiplexing where the transmitter encodes the signal using a pseudo-random sequence which the receiver also knows and can use to decode the received signal. Each different random sequence corresponds to a different communication channel;
- **CT-2 (Cordless Telephone, second generation):** cordless telephone system, widely used in some European countries;
- **DCS 1800 (Digital Cellular System):** cellular mobile telecommunication system, low cost, worldwide use;
- **DECT (Digital Enhanced Cordless Telecommunications):** cordless cellular telecommunication system, low cost, widely used in Europe;
- **DTX (Discontinuous Transmission):** significantly reduced burst repetition frequency, used for power saving, when no information needs to be transmitted;
- **ERP (Effective Radiated Power):** effective radiated power referred to a half-wave dipole;
- **FDD (Frequency Division Duplex):** multiplexing in which different frequencies are allocated to the transmit and receive channels;
- **FDMA (Frequency Division Multiple Access):** multiplexing in which separate frequency bands are allocated to each channel;
- **GSM (Global System for Mobile Communications):** cellular mobile telecommunication system, worldwide use;
- **HIPERLAN:** High performance radio local area network;
- **IMT-2000 (International Mobile Telecommunication 2000):** 3rd generation cellular phone technology which according to the size and speed of transmissions, allow users to receive high quality colour video images;
- **NADC (North American Digital Cellular):** digital cellular mobile communication system, widely used in North America. A popular term used to describe digital cellular systems that comply with Telecommunications Industry Association Interim Standard – 54; also known as D-AMPS;
- **PDC (Personal Digital Cellular System):** cellular mobile telecommunication system, widely used in Japan;
- **PHS (Personal Handy Phone System):** cordless telephone system, widely used in Japan;
- **RFID (Radio Frequency Identification):** RFID systems include automatic article identification, asset tracking, alarm systems, personnel identification, access control, proximity sensors;

- **RTTT (Road Traffic & Transport Telematics):** includes road toll systems.
- **TDMA (Time Division Multiple Access):** see Clause 4;
- **TDD (Time Division Duplex):** multiplexing in which different time slots are allocated to the transmit and receive channels.

Table G.1 – Mobile and portable units

Parameters	System name								
	GSM	DCS 1800	DECT	CT-2	PDC	PHS	NADC	IMT-2000 TDD	IMT-2000 FDD
Transmitter frequency range	890 MHz to 915 MHz	1,71 GHz to 1,784 GHz	1,88 GHz to 1,96 GHz	864 MHz to 868 MHz	940 MHz to 956 MHz and 1,429 GHz to 1,453 GHz	1,895 GHz to 1,918 GHz	825 MHz to 845 MHz	1 900 MHz to 1 920 MHz	1 920 MHz to 1 980 MHz
Access Technique	TDMA	TDMA	TDMA/ TDD	FDMA/ TDD	TDMA	TDMA/ TDD	TDMA	CDMA/ TDMA TDD	CDMA/ FDMA FDD
Burst repetition frequency	217 Hz	217 Hz	100 Hz	500 Hz	50 Hz	200 Hz	50 Hz	NA	NA
Duty cycle	1:8	1:8	1:24 (also 1:48 and 1:12)	1:12	1:3	1:8	1:3	Continuous	Continuous
Maximum ERP	0,8 W; 2 W; 5 W; 8 W; 20 W	0,25 W; 1 W; 4 W	0,25 W	<10 mW	0,8 W; 2 W	10 mW	<6 W	0,25 W	0,25 W
Secondary modulation	2 Hz (DTX) and 0,16 Hz to 8,3 Hz (multi-frame)	2 Hz (DTX) and 0,16 Hz to 8,3 Hz (multi-frame)	None	None	None	None	None	None	None
Geographical area	Worldwide	Worldwide	Europe	Europe	Japan	Japan	USA	Europe	Europe

NOTE CT-3 is considered to be covered by DECT.

Table G.2 – Base stations

Parameters	System name								
	GSM	DCS 1800	DECT	CT-2	PDC	PHS	NADC	IMT-2000 TDD	IMT-2000 FDD
Transmitter frequency range	935 MHz to 960 MHz	1,805 GHz to 1,88 GHz	1,88 GHz to 1,96 GHz	864 MHz to 868 MHz	810 MHz to 826 MHz and 1,477 GHz to 1,501 GHz	1,895 GHz to 1,918 GHz	870 MHz to 890 MHz	1 900 MHz to 1 920 MHz	2 110 MHz to 2 170 MHz
Access Technique	TDMA	TDMA	TDMA/ TDD	FDMA/ TDD	TDMA	TDMA/ TDD	TDMA	CDMA/ TDMA TDD	CDMA/ FDMA FDD
Burst repetition frequency	217 Hz	217 Hz	100 Hz	500 Hz	50 Hz	200 Hz	50 Hz	NA	NA
Duty cycle	1:8 to 8:8	1:8 to 8:8	1:2	1:2	1:3 to 3:3	1:8	1:3 to 3:3	Continuous	Continuous
Maximum ERP	2,5 W to 320 W	2,5 W to 200 W	0,25 W	0,25 W	1 W to 96 W	10 mW to 500 mW	500 W	20 W	20 W
Secondary modulation	2 Hz (DTX) and 0,16 Hz to 8,3 Hz (multi-frame)	2 Hz (DTX) and 0,16 Hz to 8,3 Hz (multi-frame)	None	None	None	None	None	None	None
Geographical area	Worldwide	Worldwide	Europe	Europe	Japan	Japan	USA	Europe	Europe

NOTE CT-3 is considered to be covered by DECT.

Table G.3 – Other RF devices

Parameters	System name					
	RFID	RTTT	Wideband data transmission systems and HIPERLANs	Wideband data transmission systems and HIPERLANs	Wideband data transmission systems and HIPERLANs	Non specific short range devices
Transmitter frequency in MHz	2 448 – 2 454	5 795 – 5 815	2 400 –2 483,5	5 150 – 5 350	5 470 – 5 725	2 400 – 2 483,5 5 725 – 5 875
Modulation type	FHSS if more than 500 mW	None	FHSS	None	None	None
Maximum ERP	a) 500 mW b) 4 W	2 W or 8 W	100 mW and spectrum power density limitation	200 mW mean	1 W mean	10 mW 25 mW
Duty cycle	a) up to 100 % b) <15 % within 200 ms period	No restrictions	No restrictions	No restrictions	No restrictions	No restrictions
Channel spacing	None	5 MHz or 10 MHz within some frequency ranges	None	None	None	None
Geographical area	Worldwide	Worldwide	Worldwide	Worldwide	Worldwide	Worldwide

Annex H
(normative)

Alternative illumination method for frequencies above 1 GHz ("independent windows method")

H.1 Introduction

When testing at frequencies above 1 GHz, the test distance shall be 1 m when using the independent windows method (for example, the radio-telephone bands). Compliance with the field uniformity requirement shall be verified for the selected test distance.

NOTE 1. With a test distance of 3 m, using an antenna with a narrow beam width or a ferrite-lined chamber at frequencies above 1 GHz, it may be difficult to satisfy the field uniformity requirement over the 1,5 m × 1,5 m calibration area.

The alternative method for frequencies above 1 GHz divides the calibration area into a suitable array of 0,5 m × 0,5 m windows such that the whole area to be occupied by the face of the EUT is covered (see Figures H.1a and H.1b). The field uniformity shall be independently calibrated over each window (see Figure H.2), using the procedure given below. The field generating antenna shall be placed 1 m from the calibration area.

NOTE 2 Cable length and geometry are less critical at these high frequencies; therefore, the face area of the EUT is the determining factor for the size of the calibration area.

H.2 Calibration of field

The following steps shall be performed on each window:

a) position the field sensor at one of the four corners of the window;

b) apply a forward power to the field generating antenna so that the field strength obtained is in the range 3 V/m to 10 V/m, through the frequency range in steps of 1 % of the starting frequency (and thereafter the preceding frequency) and record both (power and field strength) readings;

c) with the same forward power, measure and record the field strength at the remaining three corners; all four field strengths shall lie within a range of 0 dB to 6 dB;

d) take the location with the lowest field strength as reference (this ensures that the $^{-0}_{+6}$ dB requirement is met);

e) forward power and the field strength being known, the necessary forward power for the required test field strength can be calculated (for example if, at a given point, 80 W gives 9 V/m, then 8,9 W is needed for 3 V/m). The calculation shall be recorded;

f) repeat steps a) to e) for both horizontal and vertical polarizations.

The antennas and cables used for this uniform field calibration shall be used for testing. Therefore, the cable losses and the antenna factors of the field-generating antennas do not have to be taken into consideration.

The position of the generating antennas and cables shall be recorded as precisely as possible. Since even small displacements will significantly affect the field, the same positions shall be used for testing.

During the test, at each frequency the forward power established in step e) above shall be applied to the field-generating antenna. The test shall be repeated with the field-generating antenna repositioned to illuminate each of the required windows in turn (see Figures H.1 and H.2).

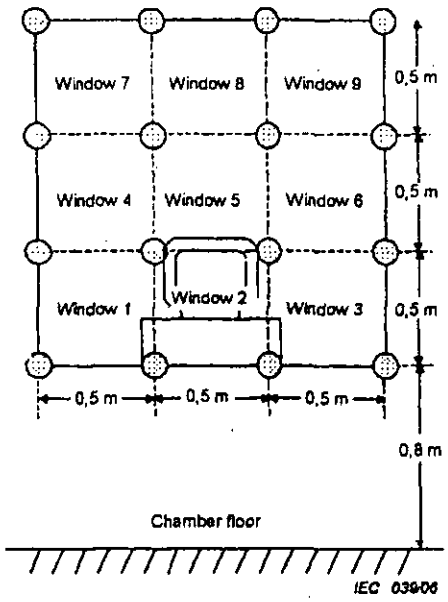

Concept of windows

1. Divide the calibration area into 0,5 m × 0,5 m windows.

2. Calibration is required for all windows intended to be occupied by the face of the actual EUT and cables.

(In this example, windows 1 to 3 and 5 are used for calibration and test)

Figure H.1a – Example of division for table-top equipment

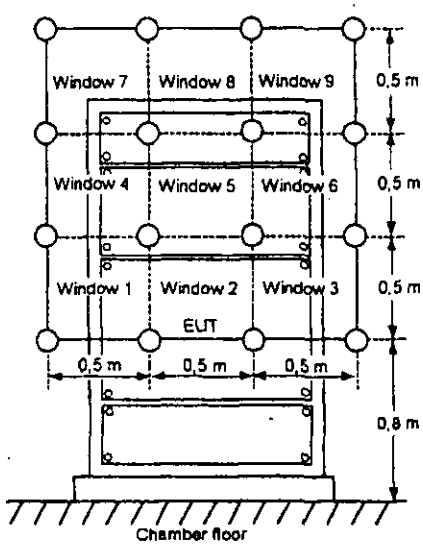

Concept of windows

1. Divide the calibration area into 0,5 m × 0,5 m windows.

2. Calibration is required for all windows intended to be occupied by the face of the actual EUT and cables.

(In this example, windows 1 to 9 are used for calibration and test)

Figure H.1b – Example of division for floor-standing equipment

Figure H.1 – Examples of division of the calibration area into 0,5 m × 0,5 m windows

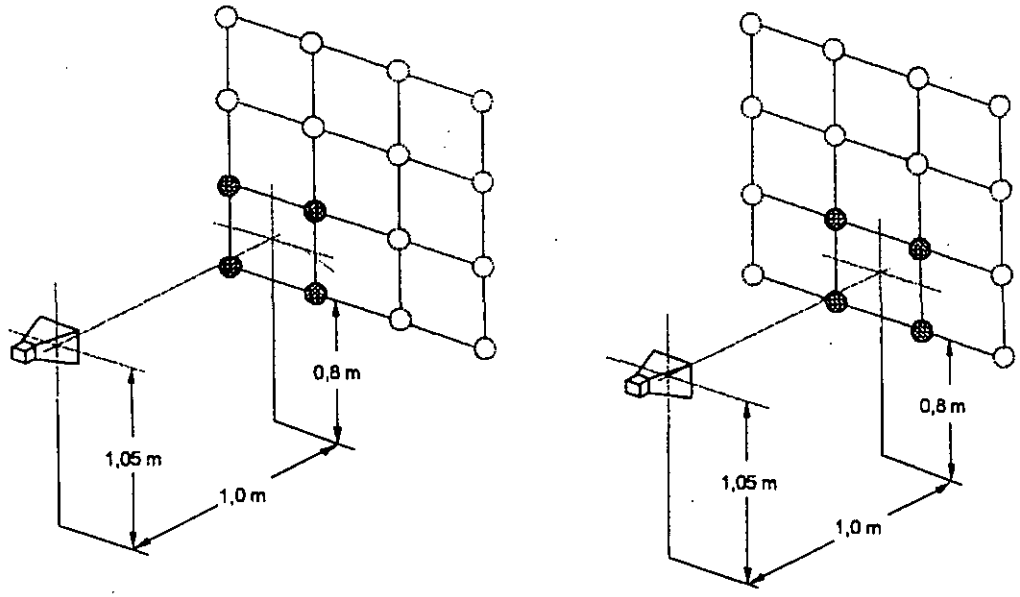

Figure H.2 – Example of illumination of successive windows

MGIPF—655 Deptt. of BIS/2008—16.09.2008—300 Books.

Bureau of Indian Standards

BIS is a statutory institution established under the *Bureau of Indian Standards Act*, 1986 to promote harmonious development of the activities of standardization, marking and quality certification of goods and attending to connected matters in the country.

Copyright

BIS has the copyright of all its publications. No part of these publications may be reproduced in any form without the prior permission in writing of BIS. This does not preclude the free use, in course of implementing the standard, of necessary details, such as symbols and sizes, type or grade designations. Enquiries relating to copyright be addressed to the Director (Publications), BIS.

Review of Indian Standards

Amendments are issued to standards as the need arises on the basis of comments. Standards are also reviewed periodically; a standard along with amendments is reaffirmed when such review indicates that no changes are needed; if the review indicates that changes are needed, it is taken up for revision. Users of Indian Standards should ascertain that they are in possession of the latest amendments or edition by referring to the latest issue of 'BIS Catalogue' and 'Standards: Monthly Additions'.

This Indian Standard has been developed from Doc: No. LITD 09 (3016).

Amendments Issued Since Publication

Amendment No.	Date of Issue	Text Affected

BUREAU OF INDIAN STANDARDS

Headquarters:

Manak Bhavan, 9 Bahadur Shah Zafar Marg, New Delhi 110 002
Telephones: 2323 0131, 2323 3375, 2323 9402 *Website*: www.bis.org.in

Regional Offices:		Telephones
Central :	Manak Bhavan, 9 Bahadur Shah Zafar Marg NEW DELHI 110 002	2323 7617 2323 3841
Eastern :	1/14, C.I.T. Scheme VII M, V.I.P. Road, Kankurgachi KOLKATA 700 054	2337 8499, 2337 8561 2337 8626, 2337 9120
Northern :	SCO 335-336, Sector 34-A, CHANDIGARH 160 022	260 3843 260 9285
Southern :	C.I.T. Campus, IV Cross Road, CHENNAI 600 113	2254 1216, 2254 1442 2254 2519, 2254 2315
Western :	Manakalaya, E9 MIDC, Marol, Andheri (East) MUMBAI 400 093	2832 9295, 2832 7858 2832 7891, 2832 7892

Branches: AHMEDABAD. BANGALORE. BHOPAL. BHUBANESHWAR. COIMBATORE. FARIDABAD. GHAZIABAD. GUWAHATI. HYDERABAD. JAIPUR. KANPUR. LUCKNOW. NAGPUR. PARWANOO. PATNA. PUNE. RAJKOT. THIRUVANANTHAPURAM. VISAKHAPATNAM.

Printed by the Manager, Govt. of India Press, Faridabad

Attachment 11, LED Lab Test Procedure Document modifications

1. **Modifications to this document.**
    a. 10-20-10
        i. 6.a.4 Measurements,
            a. changed -140 dB to -140 dBm
    b. 12-27-10
        i. Section 1.
            1. Changed recently developed to recently submitted
        ii. Section 3
            1. Removed; Part M. Radiax™ antenna cable
                a. Removed; i. General info See attachment 6
                i. Removed; 1. RTC 7-CPUS Radiax spec.pdf See attachment 7
        iii. Section 4
            a. Added word/s " LED" and "outer glass"
            b. Added word/s " LED" and "outer glass"
            c. Added word "assembly"
            d. Added word/s "end" and " assembly"
            e. Added part e. One working 8' florescent lamp with outer glass enclosure.
            f. Added part f. One working 277 volt florescent lamp ballast.

        iv. Section 5 Material to be supplied by Lab.
            1. Part a removed words "FCC part 15, part 18,"
            2. Part a added words "IEC/EU EN 61000-4-3."
            3. Part d removed; words "and Radiax™"
            4. Part f removed words "FCC part 15, part 18, and"
            5. Part h replaced "for spectrum analyzer functionality." with "to conduct tests."
            6. Added part i "Metal electrical box to house florescent 277 volt ballast."
        v. Removed attachment 6 and 7.
        vi. Section 6.
            1. Part a, Removed all test procedures pertaining to "Optional Direct emissions transfer measurements. 30 KHz to 2.8 GHZ direct radiation test using wideband Radiax™ cable."
            2. Part a, Added Time frame.
            3. Part b. Removed all test procedures pertaining to FCC part 15 & 18 compliance verification test for Class A unintentional radiators.
            4. Part b. Added Supporting Documents
            5. Part c. Removed words "The following tests may be optional as they do not specifically apply the environment associated with the LED lights. In all cases when conducting Mil standard test use the most stringent test criteria."
            6. Part c.

a. Section i Removed all test procedures pertaining to "(Optional) Method RE101, radiated emissions, magnetic field, 30 Hz to 100 kHz. See Attachment 2 "
b. Section ii Removed "(Optional)"
    1. Subsection 2 Removed the following;
        a. Ground per 2 MHz to 18 GHz*
        b. Ships, surface 10 kHz to 18 GHz*
        c. Submarines 10 kHz to 18 GHz*
        d. Aircraft (Army and Navy ASW) 10 kHz to 18 GHz
        e. Aircraft (Air Force and Navy) 2 MHz to 18 GHz*
        f. Space 10 kHz to 18 GHz*
    2. Subsection 2 Added the following;
        a. Ground 100 KHz to 18 GHz as per attachment 3. FIGURE RE102-4. RE102 limit for ground applications.
    3. Subsection 3 Removed words "RE102-1 through"
c. Section iii Removed all test procedures pertaining to "(Optional) RS101, radiated susceptibility, magnetic field, 30 Hz to 100 kHz."
d. Section iv Removed all test procedures pertaining to "(Optional) RS103, radiated susceptibility, electric field, 2 MHz to 40 GHz."
e. Section v Removed all test procedures pertaining to "(Optional) CE101, conducted emissions, power leads, 30 Hz to 10 kHz."
f. Section vi Removed "(Optional)"
g. Added Section vii. Modified RE102, radiated emissions, electric field, per table vii-1.

7. Added IEC/EU EN Tests procedures

vii. Removed attachment 2, 4, and 8.
viii. Added Section 7 attachments

c. 8-12-11
    i. Added cover sheet.
    ii. Added Table of contents
    iii. Section 2 moved document revision details to attachment 11 added words "a. See Attachment 11"
    iv. Section 4. Added item; J. Reusable shipping carton/s
    v. Section 6
        1. Part a.i. Replaced on or before February 14, 2011 with on or before August 19, 2011
        2. Part a.i. Replaced start date February 15, 2011 with start date August 22, 2011

3. Part c. ii. 1 added words "This test procedure applies to all three lamps and"
4. Part c II added part 4; Test equipment, set up, test procedure, and data presentation.
   Follow the requirements as specified in attachment 3

5. Part c. vi. 1 added words; "the eight foot LED lamp do not exceed"
6. Part c. vi. 4. Added part 4: Test equipment, set up, test procedure, and data presentation.
   Follow the requirements as specified in attachment 9
7. Part c. vii 4. Added part 4: Test equipment, set up, test procedure, and data presentation. Using the modified limits specified in Table vii-1 above, follow the requirements as specified in attachment 3.
8. Part d. i. 1. Replaced; "the LED's immunity" with; "the eight foot LED's immunity"
9. Part d. i. 4 Added part 4: Test equipment, set up, test procedure, and data presentation.
   Follow the requirements as specified in attachment 10

vi. Section 7

Part K Added; Attachment 11 Modifications to Led lab test procedures

Part I Added: Attachment 12 Retlif sample CE102 test data

Project Name
Holland Tunnel LED RF Emissions Field Test Results

DATE: 10-5-11 Final

Project Number WO B02954086

Prepared for:
Port Authority of New York and New jersey
2 Gateway Center, 16SW
Newark, NJ 07102

Prepared by:

Andy Alleshouse
RCC Consultants Inc.
Suite 201,
100 Woodbridge Center Drive
Woodbridge, NJ 07095

FACILITY ID; HOLLAND TUNNEL

FACILITY LOCATION; NORTH AND SOUTH TUBE

PROJECT INTRODUCTION;

PANYNJ is considering replacing the florescent lights in the Holland Tunnel with LED versions. PANYNJ has installed a short test section of LED lamps in the South tunnel. The RF emissions of the LED lamps were measured in the lab however the AM and FM bands were not part of the testing. PANYNJ wishes to verify that the AM and FM RF emissions from the LED lights do not interfere with the AM and FM RF signals carried by the Radiax transmission cables installed within the tunnel. In addition the lab test reviled the LED lamp had higher emissions in the 150 to 174 MHZ band.

The Goal of this test is to verify that the RF emissions from the LED lights are equal to or less than the florescent lights and to discern the ambient operating level of the 150 to 174 MHz band. The test will look for RF emissions from both type of lights in the AM FM and 150 to 174 MHZ bands. This test will not cover all the frequency bands carried by the Radiax cables.

Once the testing is completed a report will chart and compare the ambient RF levels generated by both type of lights. The report will also communicate whether or not it is advisable to proceed with the purchase of additional LED lights.

PORT AUTHORITY PROJECT NUMBER; 415-10-028, ECI-7

Prepared By:		Approved By:	
Signature on File 10-05-11		10-06-11	
Andy Alleshouse Senior Consultant	Date	Douglas Fishman Managing Director, Northeast Region	Date

Reviewed By:

Yevgeniya Shpigel PANYNJ Engineeering	Date

REVISION RECORDS

REVISION	DATE	DESCRIPTION

Table of Contents

REVISION RECORDS iii

1 SCOPE 1

2 APPLICABLE DOCUMENTS 2

3 REQUIRED MANPOWER AND TOOLS 3

4 TEST LOGISTICS 4

5 PRE TEST CUSTOMER INTERVIEW 4

6 SPECIAL CONCERNS OR ISSUES 6

7 STAGING 6

8 SOUTH TUNNEL TEST PROCEDURE 6

9 NORTH TUNNEL TEST PROCEDURE 8

10 SYSTEM RESTORATION 9

11 ACTION ITEMS 9

12 ATTACHMENTS 9
Attachment A, Field test result forms. 9
Attachment B, Test areas as tested. 9

13 NEXT STEPS 9
Expected test results. 9

14 TEST RESULTS 10
14.1 Results South Tunnel Test procedure 10
14.2 Results AM/FM Ambient Signal Level Test procedure using AM/FM antenna 10
14.3 Results South Tunnel 150 – 174 MHz Ambient Signal Level Test procedure using wideband antenna 17

15 NORTH TUNNEL TEST PROCEDURE 21
15.1 AM/FM Ambient Signal Level Test procedure using AM/FM antenna 21
15.2 North Tunnel 150 – 174 MHz Ambient Signal Level Test procedure using wideband antenna 27

16 CONCLUSION. 25

1 SCOPE

This field test document was developed to assist the user with the generation of a report documenting the necessary information to effectively organize, conduct testing, and collect test data required for the project. It is important to read through this document completely prior to departing to the site as certain documents, support, and tools are required for the field test.

This document is organized into the following sections. The applicable sections should be read and completed as required during the field test.

2.0 APPLICABLE DOCUMENTS

3.0 REQUIRED MANPOWER AND TOOLS

4.0 TEST LOGISTICS

5.0 PRE TEST CUSTOMER INTERVIEW

6.0 SPECIAL CONCERNS OR ISSUES

7.0 STAGING

8.0 TEST PROCEDURE

9.0 ACTION ITEMS

10.0 ATTACHMENTS

11.0 NEXT STEPS

2 APPLICABLE DOCUMENTS

The following documentation will be needed during testing and should prove helpful in reducing the testing time:

1. Five copies of this field test document.
2. Field test reporting forms (See attachment A)
3. Sketches of proposed test areas (See attachment B)
4. Lighting Circuit Diagram, or requested information completed in section 5.1

The following documentation is optional but could prove helpful if on hand.

5. LED Manufacturer's Data Sheet and/or Specifications
6. Test equipment calibration certificates.

It is recommended to bring at least (3) copies of each available test reporting form and any applicable construction type drawings that may aid in testing.

3 REQUIRED MANPOWER AND TOOLS

The following manpower, test equipment, tools, vehicles, and accessories are required to satisfactorily perform the field tests:

RCC Supplied for RCC use.

1. Anritsu spectrum analyzer model number MS2711D. With test person.
2. Additional battery for Spectrum analyzer.
3. Car inverter to run Spectrum analyzer (Optional)
4. Power cord adapter (optional)
5. RF coaxial test cables and adaptors.
6. Watson model W-801 Wideband antenna RX 25 MHz to 1900 MHz.
7. AM FM antenna with type N connection.
8. Tape Measure, 25 ft.
9. Digital Camera w/flash.
10. Pencil and eraser.
11. Clipboard or Portable Writing surface.
12. Engineering ruled paper.
13. Calculator.
14. Laptop with word and excel programs (optional).
15. Proper gear for climate and/or site conditions (e.g., hard hats, safety vest, latex gloves, rain gear).
16. Flash light
17. Tool Bag
18. Contact information for RCC onsite coordinator.
19. Other items TBD

Port Authority supplied.

1. Articulating platform truck with driver.
2. Van with driver for transporting workers to the platform truck.
3. Necessary material and manpower to provide lane closure e.g. traffic cones.
4. Contact information for PANYNJ onsite coordinator.
5. Auxiliary lighting as required.
6. Worker to turn off AM FM radio signals as needed.

7. Other items TBD

4 TEST LOGISTICS

The gathering of the background logistical information is vital to the effective usage of the crews with limited time on site. Obtain business cards and or contact information of the recommended suppliers contacted during the survey. RCC will attend a meeting with PANYNJ to discuss the test plan prior to the night of the test.

4.1.1.1 Sketch of tunnel sections to be tested

RCC has provided a simple sketch of the light areas to be tested. **See Attachment B** We need the PANYNJ's help in further identifying the specific tunnel locations, Section 5 may be updated with more detail after RCC meets with PANYNJ, but for now the lighting sections will be identified as;

1. LED section consisting of the newest LED lamps in the south tunnel.

Florescent section consisting of the florescent lights in the north tunnel in as close proximity as possible to where the measurements we taken in the south tunnel.

5 PRE TEST CUSTOMER INTERVIEW

Holland Tunnel South tunnel Facility Information.

Field Test Contacts

PANYNJ Project Field Contact:

Primary Name: Gary Mason

Telephone: (973) 792-4747

Cell Phone (if available): _____

Email: gmason@panynj.gov

Alternate:
Steve Olmo, HT Physical Plant Manager: Work # (201) 360-5005

John Foye, HT Maintenance Supervisor: Work # (201) 360-5058 – Cell # (973) 583-4654

Michael Matthews, Maintenance Supervisor: Work # (201) 360-5048 – Cell # (646) 879-1900

Stu Stahl, Maintenance Supervisor: Work #(201) 360-5003- Cell# (973) 583-5062

RCC Project Field Contact:

Primary Name: Andy Alleshouse

Phone: 610-390-1697

Email: aalleshouse@rcc.com

Alternate:
Name: Malcom Turdo

Phone: (732) 404-2522

Email: mturdo@rcc.com

Field Test Participants

1. **PANYNJ Participant 1:**

   Name: Stu Stahl

   Phone: Work #(201) 360-5003- Cell# (973) 583-5062

   Email:_____

2. **PANYNJ Participant 2:**

   Name: Gary Mason

   Phone: (973) 792-4747

   Email: gmason@panynj.gov

3. **PANYNJ Participant 3:**

   Name:_____

   Phone:_____

   Email: _____

4. **RCC Participant 1:**

   Name: Andy Alleshouse

   Phone: 610-390-1697

   Email: aalleshouse@rcc.com

5. **RCC Participant 2:**

   Name: Malcom Turdo

   Phone: (732) 404-2522

   Email: mturdo@rcc.com

6 SPECIAL CONCERNS OR ISSUES

1. **Turning on and off equipment**

- AM and FM transmission signals must be turned off while some measurements are being made. This applies to both tubes.
- Optional; The section of LED lamps and a similar section of florescent lamps must be turned off while some measurements are being made. This applies to both tubes. This is a time constraint option.

7 STAGING

The crews will meet at the Holland Tunnel Service Garage #2 at 13th & Provost Streets, Jersey City, NJ at 12 AM Oct, 12, 2011. Trucks and crews will stage and dispatch from the garage area.

8 SOUTH TUNNEL TEST PROCEDURE

AM/FM Ambient Signal Level Test procedure using AM/FM antenna

Note: Prior to testing the light sections to be tested will be identified.

AM/FM testing to be done 4' above road level.

1. Set up in south tunnel at section of LED lights to be tested.
2. Connect the AM/FM antenna to the spectrum analyzer.
3. Adjust the analyzer to 3 KHz bandwidth, Max Hold, and auto sweep time. Measure and record the ambient signal level starting from 510 kHz to 1730 kHz (AM band) and 87 to 108.6 MHz (FM band)

4. Insure spectrum analyzer measurement performs at least 5 sweeps per band as applicable condition. Note any peaks associated with individual lamps see attachment B Example.
5. Conduct steps 1 through 4 with the following conditions.
    a. LED lamps on, AM/FM transmissions on.
    b. LED lamps on, AM/FM transmissions disabled on all South Tunnel operational Radiax radiators, and off air antennas.

6. **Optional**
   Testing with the lamps off may establish the amount of ambient noise the lamp contributes to the overall ambient signal levels.
    a. LED lamps off, AM/FM transmissions on.
    b. LED lamps off, AM/FM transmissions disabled on all South Tunnel operational Radiax radiators, and off air antennas.

South Tunnel 150 – 174 MHz Ambient Signal Level Test procedure using wideband antenna

Note: Prior to testing the light sections to be tested will be identified.

150 – 174 MHz testing to be done 3' from LED lamps.

1. Install wideband test antenna onto the Spectrum analyzer.
2. Adjust the analyzer to 3 KHz bandwidth, and auto sweep time. Move the antenna along the section of light/s to find the highest ambient signal level in the 150 to 174 MHz band.
3. Once the highest level has been located set the analyzer to Max Hold and record the signal between 145 – 178 MHz
4. Insure spectrum analyzer measurement performs at least 5 sweeps per band as applicable condition. Note any peaks associated with individual lamps see attachment B Example.
5. Conduct steps 1 through 5 with the following conditions.
    a. LED lamps on, AM/FM transmissions on.

7. **Optional**
   Testing with the lamps off may establish the amount of ambient noise the lamp contributes to the overall ambient signal levels.
    a. LED lamps off, AM/FM transmissions on.

Restore lights and AM/FM transmissions to normal operating condition. Note: If the AM/FM sources are the same for the north tunnel, do not restore their operation at this time!

9 NORTH TUNNEL TEST PROCEDURE

Note: Prior to testing the light sections to be tested will be identified.

AM/FM testing to be done 4' above road level.

AM/FM Ambient Signal Level Test procedure using AM/FM antenna

Note: Prior to testing the light sections to be tested will be identified.

1. Set up in North tunnel at section of florescent lights to be tested.
2. Connect the AM/FM antenna to the spectrum analyzer.
3. Adjust the analyzer to 3 KHz bandwidth, Max hold, and auto sweep time. Measure and record the ambient signal level starting from 510 kHz to 1730 kHz (AM band) and 87 to 108.6 MHz (FM band)
4. Insure spectrum analyzer measurement performs at least 5 sweeps per band as applicable condition. Note any peaks associated with individual lamps see attachment B Example.
5. Conduct steps 1 through 4 with the following conditions.
    a. Florescent lamps on, AM/FM transmissions on.
    b. Florescent lamps on, AM/FM transmissions disabled on all North Tunnel operational Radiax radiators, and off air antennas.

6. **Optional**
   Testing with the lamps off may establish the amount of ambient noise the lamp contributes to the overall ambient signal levels.
    a. Florescent lamps off, AM/FM transmissions on.

North Tunnel 150 – 174 MHz Ambient Signal Level Test procedure using wideband antenna

1. Install wideband test antenna onto the Spectrum analyzer.
2. Adjust the analyzer to 3 KHz bandwidth, and auto sweep time.
3. Move the antenna along the section of light/s to find the highest ambient signal level in the 150 to 174 MHz band.
4. Once the highest level has been located set the analyzer to Max Hold and record the signal between 145 – 178 MHz
5. Insure spectrum analyzer measurement performs at least 5 sweeps per band as applicable condition. Note any peaks associated with individual lamps see attachment B Example.
6. Conduct steps 1 through 5 with the following conditions.
    a. Florescent lamps on, AM/FM transmissions on.

b. Florescent lamps on, AM/FM transmissions disabled on all North Tunnel operational Radiax radiators, and off air antennas. (Optional)

7. Optional

Testing with the lamps off may establish the amount of ambient noise the lamp contributes to the overall ambient signal levels.

a. Florescent lamps off, AM/FM transmissions on.
b. Florescent lamps off, AM/FM transmissions disabled on all North Tunnel operational Radiax radiators, and off air antennas. (Optional)

10 SYSTEM RESTORATION

Restore lights and AM/FM transmissions to normal operating condition. Note: Restore lights and all operational Radiax and off air antennas to operating condition.

1. End Test.

1. Verify all systems have been restored. (PANYNJ responsibility)

11 ACTION ITEMS

TBD

12 ATTACHMENTS

Attachment A, Field test result forms.

Attachment B, Test areas as tested.

13 NEXT STEPS

Expected test results.

RCC will provide as part of their test report a written dissertation of the anomalies between the various conditions using the "Max Hold" screen shot for each condition.