**Torres Rojas, Genara**

FOI#14191

**From:** chris@dcmerectors.com
**Sent:** Wednesday, August 07, 2013 3:43 PM
**To:** Duffy, Daniel
**Cc:** Torres Rojas, Genara; Van Duyne, Sheree; Qureshi, Ann
**Subject:** Freedom of Information Online Request Form

Information:

First Name: Chris
Last Name: Koehnken
Company: DCM Erectors
Mailing Address 1: 110 E 42nd Street
Mailing Address 2: Suite 1704
City: New York
State: NY
Zip Code: 10017
Email Address: chris@dcmerectors.com
Phone: 212-599-1603
Required copies of the records: Yes

List of specific record(s):
Please provide any and all reports generated by Haag Engineering related to the February 16th, 2012 crane accident on the World Trade Center Tower 4 Project, involving the TG1900 Tower Crane SN 76G9-1206C CD 3705

**THE PORT AUTHORITY** OF NY & NJ

FOI Administrator

December 16, 2014

Mr. Chris Koehnken
DCM Erectors
110 E 42nd Street, Suite 1704
New York, NY 10017

Re: Freedom of Information Reference No. 14191

Dear Mr. Koehnken:

This is in response to your August 7, 2013 request, which has been processed under the Port Authority's Freedom of Information Code (the "Code") for copies of "any and all reports generated by Haag Engineering related to the February 16, 2012 crane accident on the World Trade Center Tower 4 Project, involving the TG1900 Tower Crane SN 76G9-1206C CD 3705."

Material responsive to your request and available under the Code can be found on the Port Authority's website at http://www.panynj.gov/corporate-information/foi/14191-WTC.pdf. Paper copies of the available records are available upon request.

Please refer to the above FOI reference number in any future correspondence relating to your request.

Very truly yours,

Daniel D. Duffy
FOI Administrator

225 Park Avenue South, 17th FL
New York, NY 10003
T: 212 435 3642 F: 212 435 7555

This document has been electronically signed and/or sealed in accordance with the applicable State Board of Professional Engineering requirements.

World Trade Center 4500063211
4 World Trade Center
New York, NY
Client File: 4500063211
Haag File: 0212001176-250

The Port Authority of NY and NJ
Port Authority Safety Board
225 Park Avenue South 15th Floor
New York, NY 10003

Attention: Mr. Jim Keane

December 21, 2012

STATE OF NEW YORK
ANTHONY EDWARD BOND
089143-1
LICENSED PROFESSIONAL ENGINEER

Anthony E. Bond
Dec 21 2012 1:35 PM

HAAG Engineering

HAAG Engineering

625 Industrial Boulevard
Sugar Land, Texas 77478
haagengineering.com

800.527.0168
281.313.9700
281.313.9707 fax

December 21, 2012

The Port Authority of NY and NJ
Port Authority Safety Board
225 Broadway 15th Floor
New York, NY 10003

Attention: Mr. Jim Keane

Re: World Trade Center 4500063211
4 World Trade Center
New York, NY 10006
Client File: 4500063211
Haag File: 0212001176-250

In accordance with your request, we have initiated an analysis into factors causative of the involved 1976 FMC Link-Belt TG1900 tower crane incident occurring at 4 World Trade Center, New York City, New York, on February 16, 2012. Our inspection was conducted on May 23, 2012.

This engineering report has been written for your sole use and purpose, and only you have the authority to distribute this report to any other person, firm, or corporation. Haag Engineering Co. and its agents and employees do not have and do disclaim any contractual relationship with, or duty or obligation to, any party other than the addressee of this report and the principals for whom the addressee is acting. Only the engineer who signed this document has the authority to change its contents and then only in writing to you. This report addresses the results of work completed to date. Should additional information become available, we reserve the right to amend, as warranted, any of our conclusions.

## Accident Crane Description

FMC Link-Belt model TG1900 is a luffing, lattice boom tower crane. The crane has an upper revolving frame assembly which turns on a lower tower assembly. Levers for controlling hoist operations are inside the operator's station within the cab. Controls for the crane are pneumatic-over-hydraulic. The cab is centered on the upper revolving frame near the base of the boom, between the base boom pivots. Hoist control levers are in front of the operator's seat on the dash of the cab. The swing pedals are in front of the operator's seat mounted on the floor. A diesel engine assembly (power package) mounts on the revolving frame that powers the crane, along

with the reservoir that supplies hydraulic oil for crane operations. Additionally, the climbing system entails the hydraulic components connect to the main hydraulic system since it does not have its own hydraulic unit. (Refer to **Attachment A** for FMC Link-Belt model TG1900 tower crane specifications.)

Three hydraulic hoists mount on the revolving frame. The main hoist wire rope routes through the boom head sheave assembly and a multi-parts-of-line block (4 parts-of-line maximum). The main hoist drum's wire rope capacity is approximately 1,200 feet of 1-5/8-inch-diameter wire rope (line). An auxiliary hoist wire rope reeves through the auxiliary (boom tip extension) sheave assembly and attaches to a downhaul weight for loads requiring a single part-of-line. The boom hoist wire rope reeves through bridle sheaves attaching to the mast sheave assembly that mounts to the mast tip. Pendants connect between the boom tip and the bridle. When the boom hoist drum rotates, it raises or lowers the boom via the boom hoist wire rope. The opposite end of the wire rope for each of the hoists is anchored to the outboard side of the respective drum flange with two wire rope clamps. A slotted hole through the drum flange allows the wire rope to route from the inboard side of the drum flange to the outboard side of the drum flange. Four bolts for each clamp anchor the line to the outboard side of the drum flange.

Each hoist hydraulic transmission system is a closed, bi-directional (hydrostatic) hydraulic circuit. The piston pump discharges oil directly to one side of the hydraulic motor ports (high pressure, high loop), and then oil exits from the opposite port (low pressure, low loop approximately) of the motor back to the pump. Intended movement in one direction requires that the piston pump and hydraulic motor rotate in the same direction. High and low pressure locations for the circuit depend on the directional movement (flow) of the hydraulic circuit. Flow direction of the hydraulic circuit is determined by the position of the pump swash plate. Flow speed and motor displacement dictate the motor output shaft speed. Additionally, the charge pump provides positive pressure to maintain the low loop pressure and oil from the reservoir to make up for internal leakage within closed loop hydraulic circuit.

Operation of the hoist circuit to raise the load is provided by moving the hoist's lever off-center towards the operator. Hydraulic pressurized flow from the pump (stroked forward) at the motor increases the torque sufficiently to raise the load. The pump provides hydraulic power, converted from input torque, to the hydraulic motor. Splined motor output shafts then rotate long tubular shafts with attached pinion gears that in turn rotate the geared hoist drum. Continued lever movement for the hoist moves the hoist drum by signaling the pump to increase pressurized flow to the motor. A counterbalance valve, located in the lift (high pressure) side of the hydraulic circuit between the pumps and motors, allows hydraulic oil to flow freely from the pumps to the motors through the counterbalance's check valve.

Operation of the hoist circuit to lower the load is provided by moving the hoist's lever off-center away from the operator. Hydraulic pressurized flow reverses from the pump (stroked backward) to the opposite motor ports. The counterbalance valve holds the load until the pressure increases sufficiently to open the counterbalance's relief valve in the lower (low pressure) side of the

hydraulic circuit while the counterbalance's check valve is forced close. Once the relief valve is opened, the motors provide a controlled flow to lower the load.

Dynamic braking (slowing) of the hoist is accomplished as oil flowing through the motors is reduced when the hoist's lever is moved back towards the center (neutral) position. When the hoist's lever is in the center position, the pumps stop supplying flow of hydraulic oil through the circuit and the counterbalance valve engages to hold the hoist drum stationary (counterbalance's relief valve closes).

Static braking of the main hoist is accomplished when the hoist's lever is moved to the right center position. Two band brakes clamp the drum in place, via splined shafts opposite of the motors, preventing the load from drifting down due to internal leakage within the hydraulic motor circuit. Each band brake is spring applied, pneumatically released through an external air cylinder. A compression spring pulls the drum band through a brake actuation assembly, which clamps the brake linings concentrically around the drum. The shaft is greased via a fitting that allowed excess grease to enter the brake drum housing.

The main hoist system is composed of two hydraulic axial piston pumps, one of which is diverted from the auxiliary hoist circuit when it is not being utilized, powered through a diesel engine and a pump drive gearbox. Each piston pump has a charge pump. An external pre-charge pump mounts to the pump drive gearbox and provides hydraulic oil at a positive pressure to each charge pump. The geared main hoist drum is driven through pinion gears (gear reduction) by four radial piston hydraulic motors. A counterbalance valve is incorporated in the raise (lift) side of the main hoist system to provide positive pressure control when holding and lowering the load. Two filter assemblies and a suction strainer remove contaminants and foreign debris from the hydraulic system.

Each radial piston hydraulic motor consists of five pistons within a motor housing. Each piston assembly has a connecting rod, piston, seal kit (piston seal, O-ring, and backup ring), and retainer kit (piston retainer, clip, and restrictor screw) that is capped with a cylinder head attached to the end of the piston bore within the motor housing. A crankshaft, splined at one end for output torque, is supported with a set of roller bearings and routes through a drum (cam) for synchronizing/timing of each piston that is rotated by a valve spool (distributor). Each connecting rod shoe rides atop the cam, and as the crankshaft rotates, the connecting rod slides the piston forward and back within the piston bore. An Oldham coupling interfaces between the crankshaft and the distributor and accommodates a small amount of misalignment between the rotating crankshaft and distributor. The distributor rotates within the valve (distributor) housing. The motor housing fastens between a front cover and rear c-spacer along with the distributor housing. (Refer to **Attachment B** to view a Kawasaki Staffa piston motor assembly drawing.)

The manufacturer of this crane, FMC Link Belt, produced this crane under a license with Favco (an Australian company) in the 1970's. According to Favelle/Favco, when this agreement expired, FMC Link Belt built their version of the TG series. In the late 1980's, FMC sold the intellectual property and manufacturing assets for the TG series to another company.

## Background

The 4 World Trade Center (WTC) building is located at 150 Greenwich Street on the southeast corner of the 16-acre World Trade Center site in New York City, New York. The building faces directly towards the WTC Memorial Park from the west, rising 977 feet from street level. The podium of 4 WTC consists of two retail levels below grade, ground floor, and three levels above grade, and 4 WTC is the fourth-tallest skyscraper on the WTC site. The remaining floors are set aside for commercial offices, totaling 2.3 million rentable square feet. One third of the office space is slated to become the new headquarters of The Port Authority of New York and New Jersey. The tower portion of the building accommodates office spaces in two distinctly shaped floor plans. The lower- and mid-rise sections, floors 7 through 46, will feature a typical floor plans size of 44,000 rentable square feet in the shape of a parallelogram echoing the configuration of the site. These floors are served by two elevator banks, each equipped with eight cars and one elevator bank with six cars. The high-rise sections of the tower, from floors 48 to 63, feature a trapezoidal floor plate measuring 34,000 rentable square feet. The trapezoid is shaped and fluted to open toward the tip of Manhattan and triangulated from the lower floors to face 1 World Trade Center. These floors are served by two elevator banks, each with six cars. Both office floor plans contain a central core with a 45-foot span on the west side facing the WTC Memorial Plaza, as well as on the north and south. The east side has a 35-foot lease span. The 4 WTC Tower Project provides direct access to the Wall Street Financial Area and the PATH Lower Manhattan WTC Transportation Center.

The construction accident involved a 1976 FMC Link-Belt model TG1900 crane that was lifting three steel beams weighing approximately 48,000 pounds on the morning of Thursday, February 16, 2012, at 4 World Trade Center. When the load reached approximately the 48th floor the operator reportedly stated that it felt as if he had been rear-ended in a car. At this time, just prior to 10:00 a.m. on the morning of the incident, the beams fell from a height of approximately 48 stories and impacted the flatbed truck that delivered the load which was located on Cortland Way on the north side of 4 World Trade Center.

The crane's site plan required that this crane would be climbed ("jumped") a number of times during the time on the project. Just six days prior to the accident on February 10, 2012, DCM Erectors, Inc., climbed the crane for the first time. Shortly after the installation of the climbing system, the crane's owner, Federated Crane, added multiple gallons of hydraulic fluid to the crane reservoir.

The 4 World Trade Center project is being developed by Silverstein Properties Incorporated (SPI) and Tishman Construction is SPI's Construction Manager that manages the worksite. DCM Erectors Inc., is the crane lessor, and Federated Crane is the crane owner. The International Union of Operating Engineers, Local 14 and 15, represent operating engineers that, in part, work operate and maintain heavy equipment.

Several parties including The Port Authority of New York & New Jersey – Port Authority Safety Board, United States Department of Labor – Occupational Safety and Health Administration, and New York City Department of Buildings – Cranes and Derricks are investigating this incident .

In addition to this accident an incident occurred on October 28, 2011, at 4 World Trade Center involving a Favco 1500 crane that was lowering a 14,600 pound load and then experienced a similar hydraulic failure. The load did not completely fall to the ground but had to be suspended and then manually lowered. There was no property damage or bodily injury in this event. The crane involved in the October 28, 2011, event is a member of the TG series that include the TG2300, TG1900 and TG1500 models.

## Inspection

### Hydraulic System Inspection

Inspection of the accident crane hydraulic components was performed by Noah Manring, Ph. D., P.E., on March 1, 2012 at the Federated Crane Company facility in South Plainfield, New Jersey. A partial summary of inspection observations follow. (Refer to **Attachment C** for Noah Manring, Ph.D., P.E., August 3, 2012, report.)

Four (Kawasaki Staffa hydraulic) piston motors were disassembled and inspected. All four motors had one or more pistons seized within their bores. A connecting rod was displaced through the motor housing of one motor, which punctured a large hole through the motor housing. All remaining connecting rods for this motor, as well as the other motors, were intact and connected. Typical findings within the motors were deformed connecting rod shoes that scored and flattened cam surface areas. All Oldham couplings were sheared, and each distributor had seized within the distributor housing. Scattered metallic parts, along with metallic shavings, were displaced throughout the motor varied in size, some up to 30 cm (centimeters) in length. Metal shavings were also visibly observed on the high pressure side of each piston. Seals and o-rings were intact and in good condition.

Other hydraulic components were disassembled and inspected as well, including the axial piston pumps, charge pump, external pre-charge pump, and counterbalance valve. The charge pumps and external pre-charge pump were intact with no observed unusual wear and either in good or like-new condition. One of the main hoist pumps had one piston of the rotating group seized within its bore, along with a broken and displaced slipper. Scoring of the bore was observed, after the piston was removed. The remaining pistons within the pump were intact and in good condition, as well as the swash plate and other bearing components within the pump. Additionally, the counterbalance valve was tested and determined not to be functioning correctly by allowing oil to flow unrestricted in the main hoist lowering direction.

Hydraulic oil samples were taken from several locations throughout the hydraulic system including each motor, pump, and reservoir. Some of these samples were observed to have significant amounts of water. Water was observed in the reservoir, and a five-gallon oil sample

taken from the reservoir was observed to have a murky appearance. Oil samples were taken to an independent third party lab for analysis of contamination. Lab results for ISO (International Organization for Standardization – ISO) 4406 (Hydraulic fluid power -- Fluids -- Method for coding the level of contamination by solid particles) cleanliness code for particle counts within the hydraulic oil reservoir was 24/24/23 with a water content of nearly 0.55%. The ISO 4406 cleanliness code for particle counts within one of the motors was 24/23/17 with a water content of over 0.17%.

## Static Brake Assembly Inspection

Inspection of the accident crane band-brake components was performed by Anthony E. Bond, P.E., C.F.E.I., on May 23, 2012, at a warehouse located in Bayonne, New Jersey.

Two band brakes, one located several feet above the other on the main hoist assembly, were disassembled for inspection. After disassembly of the bottom band brake, we observed a high volume of material movement at the surface of the brake lining. All of the original tan color brake lining was observed to be significantly strained. Globules of material were displaced from the brake lining surface, and subsequently forced into the brake lining elsewhere. Many of these globules were polished to a high gloss with a purplish, mirror-like reflective appearance. Parts of the brake lining were affected by high temperature due to the incident, which caused the lining to be burned or scorched. At close proximity, the smell of burnt material was evident. Most surfaces of the brake lining were very dark in color (black in appearance) with many areas of discoloration and streaks, some of which were white in tint. Excess grease was seen inside the brake drum cover. Lubrication had migrated onto the brake pads most notably at the bottom of the brake. Additionally, the approximate thickness of the brake lining was 1/4 of an inch.

Steel properties of the bottom drum braking surface were notably affected as well. The surface had a bluish tint, and appeared as though it was induction hardened by the intense heat due to friction of the brake lining. Approximately 12 inches of the brake drum circumference was less affected by the incident than the remaining circumference, which was observed to have a more intensive heat affected area indicative of rapidly applied brake engagement; this area also coincided with the clamp area of the band brake. The braking surface of the bottom drum was concaved by approximately 1/8 of an inch towards the center of the drum. The concaved surface was indicative of wear to the drum surface over a significant period of time, rather than to this single incident.

For the top band brake, we observed no indication that the surface of the brake lining was effected by the high speed, high load incident. Most of the original tan color brake lining was undisturbed and was observed to have a uniform rough grit, friction material surface typical of brake lining material. Hardly any observed signs of stress induced to the brake lining were observed. Nearly no movement of material for the brake lining was present—only the normal accumulation of material buildup on the brake lining surface formed in thin streaks. High speed, high load, and high temperature did not appear to adversely affect the top band brake lining. Additionally, the approximate thickness of the brake lining was approximately 3/16 of an inch.

The top drum surface had an accumulation of brake lining material built up in small patches or areas in an uneven pattern throughout its circumference. These patch areas were indicative of uneven wear, and they were discolored black at their outer edges. The center of the patches had bronze color streaks in the direction of normal operation. Steel properties of the top drum surface were not nearly as affected as the bottom drum surface. The prevailing bluish tint appearance of induction hardened induced by heat was noticeably absent on the top drum surface. The braking surface of the top drum was concaved by less than 1/16 of an inch towards the center of the drum.

## Wire Rope Assembly Inspection

Photographs of the involved main hoist drum, wire rope, and wire rope anchor connection taken immediately after the incident were provided for our review, as well as the report from Don Pellow, P.E. (Refer to **Attachment D** for Don Pellow, P.E., September 2012 report.)

We closely examined the wire rope anchor slot through the steel drum flange that allows the wire rope to route from the inboard side of the drum flange to the outboard side of the drum flange. Noticeable was the strained area and material movement at the upper slot edge. We observed that the wire rope had cut into the upper slot edge through the flange thickness by approximately an inch in length, elongating the slot in the opposite direction of wire rope spooling onto the drum. The wire rope forced material completely back against the inside flange, and the wire rope strands created grooves in the material making depressions contouring the individual strands. Scrapes and paint rub marks patterned into parallel diagonal lines, created by the wire rope being pulled across the flange, were located approximately halfway up the flange above the slot.

Inspections of the involved wire rope was performed by Don Pellow, P.E. (Pellow Engineering Services, Inc.) at a warehouse located in Bayonne, New Jersey, April 3, 2012, and also at Lucius Pitkin, Inc., located in New York, New York, on April 4, 2012, for laboratory inspection. A partial summary of inspection observations follow.

The wire rope length on the involved main hoist drum at the time of the incident was approximately 1,175 feet, and the nominal wire rope diameter was 1-5/8 inches. Most of the wire rope's length had fallen to the ground after being fractured at the wire rope anchor slot (on the drum). An approximate two-foot section of wire rope remained attached by two wire rope clamps on the outboard side of the drum flange. The involved wire rope was observed to have undergone significant strain. Typical wire rope strained areas comprised of "bends, doglegs, kinks, "curling" and recoiling of the wire rope caused from de-reeving and abrasion of the wire rope within the system of sheaves". Fractured ends of the wire rope were closely examined at the laboratory, and the fractured ends of the wire rope were severed by the drum flange slot. Most of the individual fractured ends of each wire had failed through bending and shear, while a few of the individual wires had compressed flattened areas (severe crushing) near their fractured ends.

## Review of Documents

### ASME B30.3 *Construction Tower Cranes*

A national consensus standard developed by the American Society of Mechanical Engineers (ASME) B30.3-2009 *Construction Tower Cranes* provides requirements for the tower crane industry. The following paragraphs provide excerpts on preventive maintenance and inspection information for tower cranes.

The section titled Preventive Maintenance under ASME B30.3 section 3-2.3.1(a) states, "A preventive maintenance program based on the crane manufacturer's recommendations should be established. Dated records should be kept available."

The section titled Operator's Responsibilities under ASME B30.3 section 3-3.1.4.3.1 states in part, "Operator responsibilities shall include" ... "(d) understanding and applying the information contained in the crane manufacturer's operating manual." ... "performing frequent inspections as specified in para. 3-2.1.3." ... "promptly reporting the need for any adjustments or repairs to a designated person." ... "

Frequent inspections, as defined by ASME B30.3, should be performed daily to weekly for heavy service tower cranes".

### Operator's & Maintenance Manual

The manufacturer requires the operator and maintenance personnel to regularly perform preventive maintenance by checking filters, filter indicator lights, and the hydraulic oil reservoir daily, as well as to drain water by opening the drain plug that accumulate within the reservoir due to condensation. The following several paragraphs provide excerpts of hydraulic system preventive maintenance information.

Under the heading, "Before Starting Daily Operations" on page 1-3 of the manufacturer operator's and maintenance manual the following hydraulic items are required. (1) "Check all hoses for chafing, bulging, or other damage. Replace defective hoses before starting machine." (2) "Check for external leaks." (3) "Check filter indicator lights for evidence of plugged or dirty filters. Replace filters as required." (4) "Drain any water caused by condensation from the hydraulic reservoir. Drain by opening the drain plug at the bottom of the hydraulic reservoir. Close the plug after draining water." (5) "Check the hydraulic reservoir level. Fill if necessary."

The manufacturer operator's and maintenance manual for 10 hour scheduled maintenance of the hydraulic reservoir included the following on page 5-3. (1) "Check oil level – add as necessary." (2) "Inspect the system for leaks, wear, or other damage. Repair before further operation. (3) "Before starting the engine, drain any water by using the drain plug at the bottom of the hydraulic reservoir. Water accumulation is due to condensation in the hydraulic system."

The manufacturer operator's and maintenance manual for 50 hour scheduled maintenance of the hydraulic system included the following on page 5-4. (1) "Change after first 50 hours of operation on a new machine, and every 500 hours thereafter."

The manufacturer operator's and maintenance manual for 1,000 hour scheduled maintenance of the hydraulic system included the following on page 5-6. (1) "Drain, clean, and refill with proper weigh hydraulic oil." (2) Remove suction strainer and clean. If damaged, replace." (3) "Remove diffuser from bottom of return filter. Clean, or if necessary, replace."

Underline text on page 5-19 of the manufacturer operator's and maintenance manual states, "Use only prefiltered oil. Store oil in clear, and sealed containers to prevent possible contamination of oil due to foreign material, dirt particles, or moisture."

Under the heading, "Hydraulic Oil Change Procedure" on page 5-22 of the manufacturer operator's and maintenance manual states the following, "The hydraulic system must be drained, flushed, and refilled seasonally, or when the machine is erected at a new job site."

Under the heading, "Hydraulic Oil Sampling Procedure" on page 5-44 of the manufacturer operator's and maintenance manual the following hydraulic items are required. (1) "A petcock is provided on the machine for taking an oil sample." (2) "Clean the area around the petcock to prevent foreign material from entering the oil sample bottle. (3) "Run the engine at low idle. The oil should be warm ... before taking sample." (8) "Without changing the flow rate, collect an oil sample in a clean bottle."

Under the heading, "Allowable Contamination Level" on page 5-44 of the manufacturer operator's and maintenance manual states, "Figure 5-35 shows the maximum allowable contamination level for this model crane. Any count above that level means that the hydraulic oil must be replaced..." (Refer to **Attachment E** for Figure 5-35.)

## Discussion

### Hydraulic System

Hydraulic oil serves several purposes within a hoist hydraulic system. The primary purpose of hydraulic fluid is to transfer energy through pressured flow. Other purposes of hydraulic oil includes lubricating metal surfaces to reduce wear, transferring heat away from (cooling) hydraulic components, removing wear particles to filters, and protecting metal components from corrosion.

Many factors can contribute to internal component wear and failure for hydraulic systems such as large temperature fluctuations which effect oil viscosity. When the temperature of the oil increases, the viscosity decreases (oil becomes thinner). Hydraulic components can then prematurely wear when oil becomes too thin. Excessive temperatures also cause accelerated oil

degradation. Internal component wear failure can also be attributed to such factors as insufficient reservoir oil levels, oil degradation, oil particulate contamination, water contamination, excessive oil pressures, as well as the age of the hydraulic components.

Hydraulic oil particulate contamination is commonly the leading cause for premature hydraulic component failures. Particulate contamination within hydraulic components is an obvious concern, since hydraulic components require precise machined components that have very tight clearances between moving parts to meet operational demands of heavy equipment. The lubricating film of hydraulic oil keeps moving internal parts separated and reduces the level of wear for hydraulic components. Many hydraulic components have mechanical clearances that are only a few ten-thousandths of an inch. (10μm is approximately 0.0004 of an inch, which is typical for piston pumps and motors.) Such tight clearances between moving internal parts of motor and pump parts make them highly susceptible to particulate contamination within hydraulic oil.

For the accident crane, lab results reported ISO 4406 cleanliness code on particle counts at 24/24/23 within the hydraulic oil reservoir and as high as 24/23/17 for the motors. The manufacturer of the motor requires an ISO 4406 cleanliness code of 18/14 or cleaner. A recommendation by a third-party hydraulic company suggest a similar ISO 4406 cleanliness code of 17/15 (refer to **Attachment F**). The 18/14 cleanliness code numbers correspond to the last two numbers in the aforementioned cleanliness codes for the reservoir (24/23) and motor (23/17).

The manufacturer of the hydraulic motor recommends an ISO 4406 cleanliness code of 18 that represents no more than 2,500 particle count of 5 microns or greater within a 1 ml of hydraulic oil (lab sample). Particle count for the reservoir was over 84,000, nearly 34 times the allowable particle count. Particle count for the motor was over 47,000, nearly 19 times the allowable particle count. The manufacturer of the motor also recommended an ISO 4406 cleanliness code of 14 that represents no more than 160 particle count of 15 microns or greater within a 1 ml of hydraulic oil. Particle count for the reservoir was over 55,000, over 340 times the allowable particle count. Particle count for one of the motors was over 900, nearly 6 times the allowable particle count. As can be seen by these results, the lab sample tests indicate that the hydraulic oil had abnormal conditions with extremely high levels of particulate matter.

Physical evidence throughout all hydraulic component parts confirmed these lab results, as seen during disassembly of components, which showed significantly scratched and scored parts due to particulate contamination. Internal components of the motors and pumps including the distributors, pistons, bores, slipper bearing brass, valve plate, swash plate, connecting rod shoes, readily exhibited scratched, scored, and worn surfaces. The hydraulic system of the involved crane contained severe contamination due to an overabundance of particulates within the hydraulic oil. Hydraulic oil was murky brown with minimal translucency in many areas throughout the hydraulic system. A possible cause for this widespread water contamination may be from the (tower crane) climbing system. The climbing system had not been active for several months and the requirement to add approximately 50 gallons to the hydraulic systems shortly after

installation could have generated the contamination. Once the fluid was added, the contaminants were free to flow throughout the entire hydraulic system. The crane did not meet the motor manufacturer's recommended hydraulic oil cleanliness levels for particulate contamination. The involved accident crane's hydraulic system had significantly high levels of particulate contaminates, which was a direct contributable cause for the initial motor failure.

## Hydraulic System - Water

Water is another common source of hydraulic oil contamination in hydraulic systems, which is also known to cause premature hydraulic component failures within the hydraulic industry. Water can enter the hydraulic system for crane hydraulic equipment in several ways, such as through worn pumps, motors, and cylinder seals, as well as through the reservoir breather, reservoir filler cap, loose hydraulic fittings, and hydraulic manifolds. Water can enter the hydraulic system during hydraulic component servicing or replacement. Water can condense on the inside of a reservoir, and water can be drawn into the reservoir when the oil level rises and falls. Water also can be forced into the reservoir or other loose hydraulic components when transporting the crane during rainfall or when the crane is being washed clean.

Moisture can exist in three states within a hydraulic oil system: dissolved water, emulsified water, or free standing water. Emulsified water greater than a few hundred part per million can cause the oil to become milky in appearance. Free-standing water settles at the bottom of the reservoir when the pump stops circulating the oil within the hydraulic oil system.

Most hydraulic oil systems typically recommend a water content of less than 0.1% (1,000 ppm) water, and many hydraulic component manufacturers recommend approximately half of this amount to provide extended component service life by minimizing the harmful effects of water contamination. Significant concentrations of water cause fluid degradation within the hydraulic system; such degradation includes accelerated corrosion, reduced lubricating film thickness and component life, as well as increased metal surface fatigue and component wear. A large volume of water was present within the accident crane's hydraulic system. As previously mentioned, lab results reported a water content of nearly 0.55% and over 0.17% for a motor. At a minimum, the reservoir had five times the amount of acceptable water concentration for hydraulic oil and the motor had nearly two times the amount of acceptable water concentration for hydraulic oil. The reservoir was observed to have a murky appearance; this in itself would have clearly indicated that the hydraulic oil had a profuse concentration of water contamination. The involved accident crane's hydraulic system had significantly high levels of water concentrations, which was a direct contributable cause of the initial motor failure.

## Main Hoist Components

Hydraulic pressurized flow from the pump at each motor increases the torque sufficiently to raise the load, when the pump strokes forward. Each main hoist motor is the same type and model. Motors are hydraulically plumbed in parallel for the main hoist hydraulic circuit, which provides four times the output torque at one-fourth the speed that would be provided by a single motor.

The pump provides hydraulic horsepower in the form of pressurized flow to the hydraulic motor that in turn provides mechanical horsepower in the form of torque and speed (rpm) which rotate the geared hoist drum. Since mechanical horsepower (torque x rpm / 5252) is a fixed quantity for the main hoist system, a loss of one motor will significantly reduce the available mechanical horsepower by one-fourth or 25 percent.

A maximum allowable load provided by the load chart for a single part-of-line is approximate 57,000 pound load for the involved crane. The actual load lifted at the time of the accident was approximately 48,000 pounds, so the actual load was approximately 84 percent of maximum capacity (48,000/57,000 x 100%). This is confirmed by the involved crane's load monitoring system data that indicated the load lifted at the time of the incident was 48,145 pounds and the percent capacity of maximum load was 84 percent. When a hydraulic motor failed, the crane capacity was reduced by one-fourth, as well as the available mechanical horsepower. Similarly, the reduced allowable load would be three-fourths of the original maximum allowable load from the manufacturer load chart. This translates into a reduced maximum crane capacity of 42,750 pounds (57,000 x 0.75 = 42,750 pounds) for a single part-of-line. Once one motor failed due to hydraulic contamination, the main hoist system did not have enough mechanical horsepower to hold the load from falling to the ground impacting a flatbed trailer.

Noah Manring, Ph. D., P.E. used a numerical model developed in Matlab/Simulink® to simulate one failed motor. Report discussion and graphs indicate that within a few seconds of the motor failure, gravitational pull of the 48,000 pound load overcame the remaining three motors mechanical horsepower and ability to hold the load. At this point, the gravitational pull of the load forced the main hoist drum to reverse the directional rotation of the three motors and the load descended. Within the hydraulic system, motors force hydraulic oil into the high pressure side of the hydraulic circuit against the pump's pressurized flow rate; this caused the system relief valve to open allowing hydraulic oil to flow back to the opposite side of the motors. In this condition, the motors were not able to operate without sufficient horsepower to support the load. Motors continued to spin faster in reverse than their rated speed within a few seconds reaching speeds well over 800 rpms. Catastrophic failure of the internal motor parts including the remaining Oldham couplings happened at this time, which allowed the load to fall uncontrollably to the ground. (Refer to **Attachment C** for Noah Manring, Ph.D., P.E. August 3, 2012, report.)

Physical evidence of motor components supports Noah Manring, Ph. D., P.E., numerical model analysis. Once one distributor seized within its housing due to hydraulic contamination, forced rotation of this motor output shaft by the main hoist drum sheared the Oldham coupling that interfaces between the crankshaft and the distributor. Excessive rotational speed of the motors, forced a connecting rod to displace through the motor housing of this first failed motor, which punctured a large hole through the motor housing. The hole in the motor housing allowed hydraulic oil to rapidly escape from the hydraulic system. Similarly, the excessive motor rotational speed, that was forced by the gravitational pull of the load on the main hoist drum to rotate at several times normal operational speeds, caused all remaining distributors (valve spools) to seize within their distributor housing due to cavitation. This chain reaction of seized distributors eventually sheared the remaining Oldham couplings of these three motors.

Additionally, the Oldham coupling reportedly has a significant safety factor of 100, which would eliminate the failure of the Oldham coupling as the cause of the initial motor failure.

As previously mentioned, static braking of the main hoist is accomplished when the hoist's lever is moved to the right center position. Two band brakes clamp the drums in place preventing the load from drifting down due to internal leakage within the hydraulic motor circuit. Physical evidence indicated that the static band brakes were engaged during the falling load incident at some point. This is made apparent due to the significant observed damage to the bottom brake lining and drum. Movement of material for the brake lining was indicative of a high speed, high load event made evident by the high gloss purplish, mirror-like reflective appearance of the brake lining. The bottom brake lining was affected by severe high temperatures due to the incident, causing the brake lining to be burned and scorched. The bottom drum steel properties at its brake surface changed to a bluish tint appearance due to the high temperature created by clamping the brake linings onto the drums at extremely high speeds and load.

Greater wear on the lower brake compared to the upper brake was attributed to a design feature that required equal adjustments of both brakes for even braking. In this situation, most of the braking was performed by one brake that resulted in uneven braking, since the brakes were not equally adjusted. Newer crane designs typically activate the holding brake after significantly reducing the hoist drum RPM and the joystick is brought to the neutral position (with no sideways movement of the hoist lever).

Drum brakes for the involved accident crane are static brakes and were neither designed nor intended for dynamic braking. Hydraulic motors control the load. Hydraulic motors control the movement of the main hoist by slowing the load down until the load is stopped. Band brakes merely clamp the hoist drum in place once the load has stopped, after the control lever is placed in the neutral position. As stated within the manufacturer operator's and maintenance manual, "Each hoist brake control is interlocked with the control valve so the brake cannot be applied when lowering until the hoist control lever returns to the neutral position." The involved crane's static band brake system was not designed for dynamic braking. The involved accident crane's static band brake system was not a contributing factor of the falling load incident.

To gain an understanding of the wire rope failure, the theoretical wire rope unspooling speed at the time of the incident was determined. Surveillance cameras at the site indicate that the load had dropped approximately 7 floors in 1.3 seconds just prior to impacting the flatbed trailer. With an average floor height of 14.5 feet per floor, the approximate speed at impact would calculate to 78 ft./sec (7 floors x 14.5 ft./floor /1.3 sec = 78 ft./sec). The theoretical average velocity of an object falling approximately 700 feet, which is about 48 stories, is 106 ft./sec ($\sqrt{2}$ x 32.2 ft./s$^2$ x 700 ft./2 = 106 ft./sec).

Noah Manring, Ph. D., P.E., used a numerical model that indicated that the motor output shaft speed reached over 800 rpm. The main hoist gear and motor pinion have a gear ratio of approximately 12.53 (238 hoist teeth/19 pinion teeth = 12.53). This translates into a main hoist drum speed of nearly 64 rpm (800 rpm/12.53 = 63.8 rpm). With a main hoist drum

circumference of 170 inches or 14.14 feet, each wrap of wire rope was unspooling from the drum at a rate of approximately 905 fpm or (64 rpm x 14.14 ft./rev = 905 fpm). With 700 feet of wire rope on the drum plus an additional three wraps of wire rope on the drum, the length of wire rope on the drum would be approximately 742 feet (700 ft. + 3 x 14.14 ft. = 742 ft.). The wire rope would completely unspool in less than a minute (742 ft. /905 ft./min x 60 sec/min = 49 sec), which translates to approximately 15 ft./sec. This simply implies that the Noah Manring, Ph. D., P.E., numerical model approach was conservative, since the surveillance cameras indicate over five times this speed for the last several floors.

Many media reports indicated that the cause of the falling load was due to the main hoist wire rope failure. These reports were inaccurately presented, as our previous discussions on the motor failure have indicated. The speeds provided by the aforementioned camera surveillance and numerical analyses above, indicate that the main hoist drum reached speeds sufficiently high to enable the wire rope to completely unspool and the spinning drum's momentum (inertia) attempted to reverse-spool the wire rope around the drum with significant force to fracture the wire rope against the wire rope anchor slot, aided by the falling 48,000 pound load that highly impacted the wire rope. Calculations by Don Pellow, P.E., indicated that the impacting force initiated by the falling beam "easily and instantaneously" fractured the wire rope.

Don Pellow also indicated in his report that the damage to the wire rope, excluding the fractured wire rope ends, was "caused subsequent to the wire rope being sheared". He also reported that evidence indicated the wire rope fractured due to "severe bending, crushing, and cutting experienced against" the wire rope anchor slot within the drum flange. The wire rope fracture was not the cause of the load falling. The wire rope fracture for the involved main hoist was the result of the falling load initiated by the motor failures. Additionally, Don Pellow indicated that there was no observed wire rope manufacturing defects.

## Maintenance

The lack of preventive maintenance of hydraulic systems is certainly a leading cause of hydraulic system failure. Proactive maintenance of the hydraulic systems would eliminate hydraulic failure of this nature. Preventative maintenance needs to be performed routinely, such as following recommendations provided by the manufacturer maintenance schedules. Manufacturer maintenance schedules should be followed as standard practice, since preventive maintenance obtains desired results of maximized component life and reduced component failure, as well as reducing overall cost of the hydraulic system over its life. The manufacturer puts significant emphasis on preventative maintenance of the hydraulic system, because filtering contaminant oil and periodically changing the oil avoids component failures of this nature.

The manufacturer requires either the operator or maintenance personnel to check filters, filter indicator lights, and the hydraulic oil reservoir daily, as well as to drain water by opening the drain plug that accumulate within the reservoir due to condensation. This preventative maintenance is also required after 10 hours of crane operation. The manufacturer requires that the hydraulic filters be changed after every 500 hours of crane operation and the hydraulic

reservoir be drained, cleaned, and refilled with pre-filtered hydraulic oil after every 1,000 hours of crane operation. Requirements by the manufacturer indicate that the hydraulic reservoir needs to be drained, cleaned, and refilled with pre-filtered hydraulic oil seasonally or when the crane is erected at a new job site by the owner. Additionally, the manufacturer requires that maintenance personnel take oil samples regularly to have them analyzed for contamination, since particulate count within the sample is a precise indicator of contamination levels. The lack of preventive maintenance for the involved hydraulic systems is a direct contributable cause of the initial motor failure.

A national consensus standard ASME B30.3-2009, *Construction Tower Cranes*, provides maintenance requirements for the tower crane industry. The standard requires that the crane preventative maintenance program should follow manufacturer's recommendations. An operator is required by the standard to "be familiar with the equipment and its proper care", and any conditions that requires maintenance, the operator "shall report the condition promptly to the appointed person". Further defining of frequent inspections by the standard requires that daily inspections, and up to a maximum of a weekly inspection, be performed for heavy service tower cranes that are operating at 85% or above rated load.

Maintenance challenges are presented when multiple personnel maintain equipment over an extended period of time. The owner (Federated Crane), lessee (DCM Erectors Inc.), operator, and maintenance personnel, all have important roles to fulfill in terms of crane maintenance. Each must do their part to ensure the crane is safe and performing optimally. The manufacturer and ASME B30.3 provide requirements for the inspection and maintenance of the involved crane, as well as the involved personnel. An owner (Federated Crane) fulfills their responsibility by ensuring crane maintenance between subsequent leasing contracts. The owner (Federated Crane) is responsible for the manufacturer's requirement, among other maintenance items, that the hydraulic oil reservoir be drained, cleaned, and refilled prior to the crane being erected at a new job site (or at a minimum seasonally). The lessee of the crane (DCM Erectors Inc.) fulfills their responsibility by ensuring crane maintenance is performed per the leasing contract, manufacturers requirements, and ASME B30.3. The lessee (DCM Erectors Inc.) is at a minimum responsible for overseeing that proper maintenance is performed by either the operator or appropriate maintenance crews at the jobsite. An operator fulfills his responsibility by ensuring he is familiar with the equipment, and he provides daily and frequent inspections that are required by the manufacturer, as well as ASME B30.3. A few of the crane operator's responsibilities are to check filters, filter indicator lights, and the hydraulic oil reservoir daily. The national standard requires the operator either perform the maintenance or have the appropriate maintenance personnel do so. The operator is also required to either drain the water daily within the reservoir that accumulates from condensation or have the appropriate maintenance personnel do so. The owner (Federated Crane), lessee (DCM Erectors Inc.), operator, and maintenance personnel did not, at least in part, successfully fulfill their roles to ensure the involved crane was adequately maintained.

## Design

The design of the 1976 FMC Link-Belt model TG1900 was performed in the late 1960's and early 1970's, which was using technology that existed at that time. This resulted in the hydraulic circuit not being designed in a fail-safe manner. The hydraulic system design could have contributed to the incident due to the four motors being plumbed in parallel. When one motor fails under heavy load, the crane can drop the load. The failed counterbalance valve, which appeared to be original equipment, may also have contributed to the incident, which allowed hydraulic fluid to flow back through the counterbalance valve instead of closing. The hoist brake design requires that the operator move the joystick laterally to the right, once reaching the neutral position, to engage the brakes. On newer cranes, the neutral position is in the middle of the joystick stroke and requires no side movement of the joystick to engage the static brakes. The involved design of the static brake system also requires equal adjustment for two separate brake drums, which is not realistically accomplished over the life of a product. The involved design also required the climbing system be added to the main hydraulic system likely contributing to contamination of an otherwise clean system. Modern crane climbing systems have independent hydraulic systems, which eliminates the possibility of contamination from an idled climbing system. Additionally, the layout of the hydraulic hoses appears haphazard and allows for chafing, eventual leakage and the possibly of a failure before a new one is installed.

## Age of Crane

Mechanical, hydraulic, pneumatic, and electrical degradation is inevitable with a crane that is nearing 40 years of age. Crane maintenance is more intensified with a crane of this age, since components naturally wear with use, fatigue with repeated cycles, become inoperable for a multitude of reasons, break due to impact or misuse, and deteriorate from environmental conditions. The original crane manufacturer (FMC Linkbelt) does not continue to support this series of cranes; they manufactured approximately 56 cranes of this series. The acquiring company does not take legal responsibility for the design of cranes manufactured by FMC Linkbelt, but can fabricate spare parts according to the drawings contained in the purchased assets. Knowledgeable maintenance personnel for equipment of this age also can become hard to find. At some point, as reportedly in this case, the crane is overhauled. Replacement parts with today's sophisticated technology and machining are placed on a crane that has already seen its best days. These issues and conditions increase maintenance cost, and each time a component is replaced the dynamic working parts of the crane system is altered. Component replacement, system modification, and continued aging of the crane, at some point require a risk assessment for continued crane operation. Crane maintenance should be proactively pursued by all parties that oversee and perform maintenance for cranes, especially since mechanical, hydraulic, pneumatic, and electrical degradation is inevitable on an aging crane nearing 40 years of age.

## Conclusions

Based on our inspection and the information discussed above, we have reached the following conclusions:

1. The main hoist system did not have enough horsepower due to a failed hydraulic motor, which caused the load for the involved accident crane at 4 World Tower Center to fall uncontrollably to the ground.

2. Significantly high levels of particulate contaminate and water concentrations were likely contributable causes for the initial hydraulic motor failure.

3. Design of the hydraulic system design likely contributed to the incident, since the hydraulic system was not designed in a fail-safe manner. When one of the four motors that were plumbed in parallel failed under heavy load, the hydraulic system allowed the load to fall.

4. The involved hydraulic system design also required the climbing system be added to the main hydraulic system, which likely contributed to contamination of an otherwise clean system.

5. A failed counterbalance valve, which appeared to be original equipment, also likely contributed to the incident, which allowed hydraulic fluid to flow back through the counterbalance valve instead of closing and holding the load.

6. Design of the hoist brake system likely contributed to the incident, since the operator is required to move the joystick laterally to the right once reaching the neutral position, to engage the brakes. The involved design of the static brake system also requires equal adjustment for two separate brake drums, which is not realistically accomplished over the life of a project or life of the crane.

7. Evidence indicates that the wire rope fractured at the two wire rope clamps anchored to the outboard side of the drum flange.

8. Wire rope failure for the involved main hoist was the result of the uncontrollable falling load initiated by hydraulic motor failures.

9. The involved wire rope had no observed manufacturing defects.

10. Lack of preventive maintenance for the involved hydraulic systems was likely a contributable cause of the initial motor failure.

11. The crane's age was likely a contributing cause for the incident, especially since mechanical, hydraulic, pneumatic, and electrical degradation is inevitable on a crane nearing 40 years of age.

12. According to Dr. Manring, the mode of failure identified here for the FMC Linkbelt 1900 "crane is probably the same mode of failure that caused the earlier lost-load incident for the Favco 1500 crane on October 28." This is a cause of concern for the TG series of cranes when they are operating within a densely populated area like New York City.

13. The owner (Federated Crane), lessee (DCM Erectors Inc.), operator, and maintenance personnel did not, at least in part, successfully fulfill their roles to ensure the involved crane was adequately maintained

Respectfully submitted,

**HAAG ENGINEERING CO., INC.**

Anthony E. Bond
Dec 21 2012 1:35 PM

Anthony E. Bond, P.E.
New York License 089143-1

AEB:lea

# Attachments

Attachment A

HAAG

FMC

# General Specifications

## Link-Belt® 115-ton *(104.31 metric ton)* Tower/gantry crane

# TG-1900

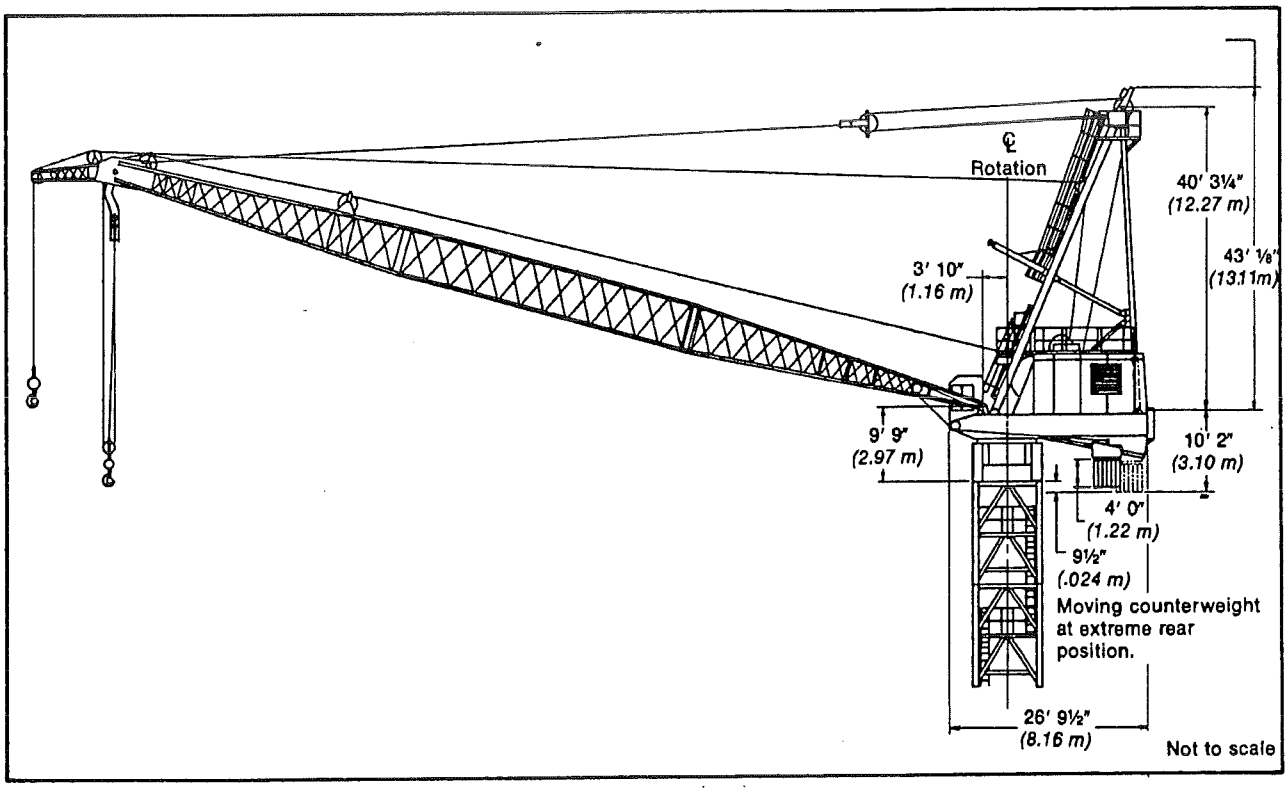


| General dimensions | Feet | *meters* |
|---|---|---|
| Basic boom length | 80′ 0″ | *24.38* |
| Maximum boom length | 200′ 0″ | *60.96* |
| Length, optional boom tip extension | 10′ 0″ | *3.05* |
| Tailswing | 20′ 10″ | *9.15* |
| Over-all width, revolving upperstructure | 13′ 4″ | *4.06* |

# Weights for transporting — approximate

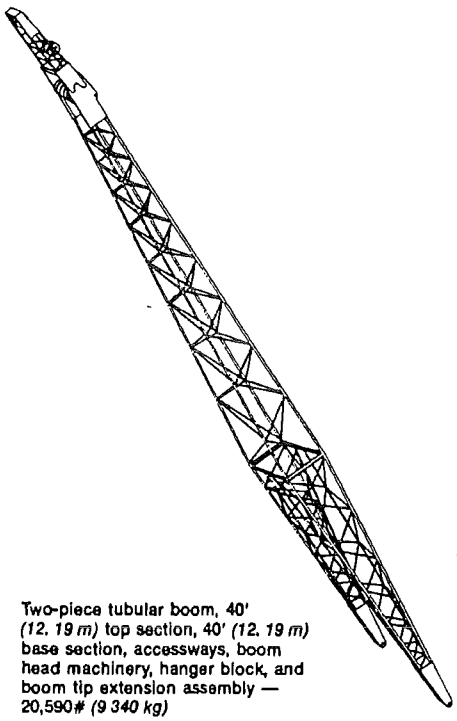

Two-piece tubular boom, 40' *(12. 19 m)* top section, 40' *(12. 19 m)* base section, accessways, boom head machinery, hanger block, and boom tip extension assembly — 20,590# *(9 340 kg)*

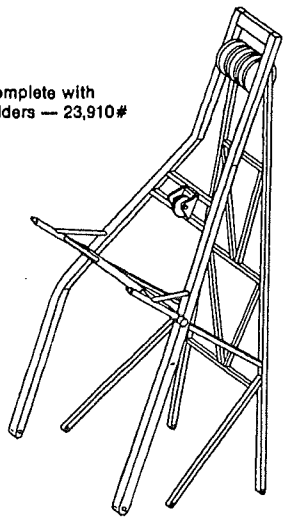

Mast assembly complete with platforms and ladders — 23,910# *(10 846 kg)*

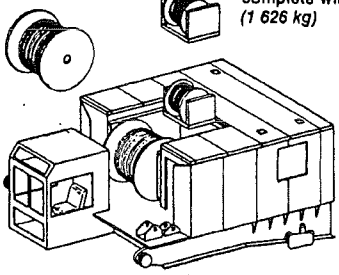

Main load hoist drum and shaft — 9,700# *(4 400 kg)*

Auxiliary load hoist, including complete winch assembly — 3,585# *(1 626 kg)*

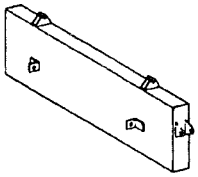

Fixed counterweight and linkage — 23,700# *(10 750 kg)*

Basic upper including machine deck, swing system, turntable bearing, counterweight trolley, main and auxiliary load hoist winches (including drum assemblies), boomhoist cable, machinery cab, and operators cab — 84,555# *(38 354 kg)*

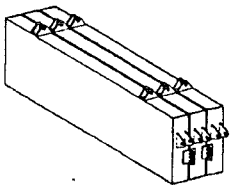

Moving counterweights (3 @ 23,600# — *10 705 kg)* — 70,800# *(32 114 kg)*

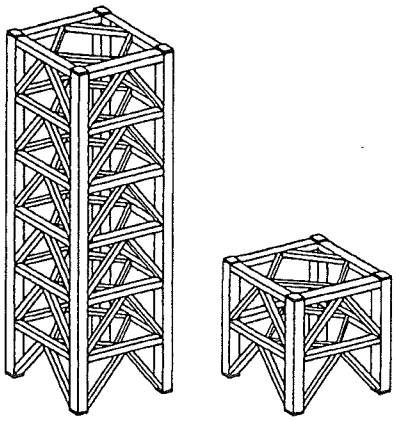

1900 tower weights — 40' *(12.19 m)* tower assembly complete — 30,665# *(13 910 kg)*, 13' 7½" *(4.15 m)* tower assembly complete — 11,670# *(5 294 kg)*

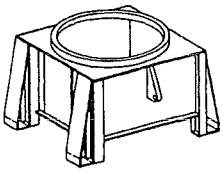

Turntable bearing mounting base and bolts — 16,560# *(7 512 kg)*

# Machine working weights — approximate

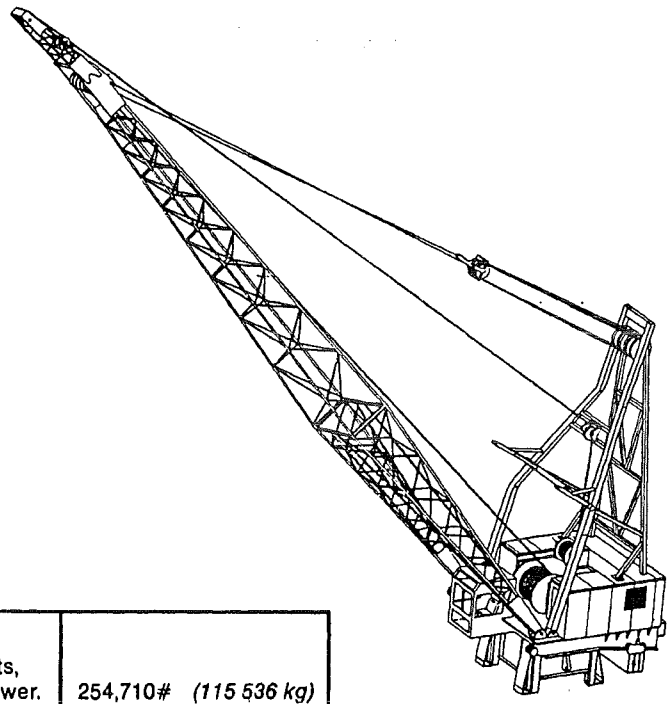

| | |
|---|---|
| Machine w/80' *(24.38 m)* boom, 10' *(3.05 m)* boom tip extension, including counterweights, all necessary operating equipment, but no tower. | 254,710# *(115 536 kg)* |

# General Specifications

## Foundation

Foundation requirements and foundation reaction charts — consult factory.

## Tower

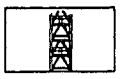

**Free standing tower** (non-climbing)

Welded, high strength, low alloy steel, wide flange beams. Sections 13' 7½" *(4.15 m)* or 40' *(12.19 m)* long, 9' 9" x 9' 9" *(2.97 x 2.97 m)* outside dimensions; bolted together on machined pads at each corner.

**Climbing tower** — consult factory.

## Revolving upperstructure

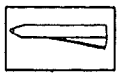

**Frame**

All-welded, high strength, low alloy steel; machined to accommodate boom, mast, swing-system, main hoist drum mounting frame and drum, power unit and operator's cab. Optional: auxiliary hoist drum mounting frame and drum mounted on top of main hoist drum frame.

**Turntable bearing mounting base**

Welded, high-strength, low-alloy steel, wide-flange beam construction. The circular turntable bearing mounting pad, along with the tower connecting pads, are machined to assure squareness, proper fit, and a flat surface to uniformly transfer loads. Overall dimensions for the mounting base are 9' 9" x 12' 3⅜" x 5' 3⅜" *(2.97 x 3.75 x 1.61 m)* high.

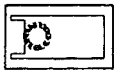

**Turntable bearing**

Roller bearing type; inner race with integral swing gear bolted to transition section mounted on top of tower section; outer race bolted to revolving upperstructure frame. Swing gear teeth machine-cut.

**Engine**

Diesel; turbocharged full pressure lubrication, oil filter, air cleaner, hour meter, hand throttle, and complete set of engine gauges. Optional: electric motor drive — consult factory.

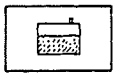

**Fuel tank**

750 gallons *(2 839 L)* capacity. (Sufficient to run crane for approximately 80 hours of average lifting crane operation.)

### Hydraulic system

Swing, boomhoist, main load and auxiliary load hoist drums — all hydraulically operated. Hydraulic power is supplied by reversible flow, variable displacement, piston-type pumps, flange mounted to gear reduction unit, which is mounted on output shaft of engine. Hydraulic pumps are connected through a closed loop hydraulic circuit to radial piston hydraulic motors which power operating functions. Normal braking of operational functions accomplished by hydraulic motors when oil flow through motors is reduced by movement of control lever toward neutral position.

| Engine Specifications | GM 12V-71T |
|---|---|
| Number of cylinders | 12 |
| Bore and stroke — inches<br>— *(mm)* | 4¼ x 5<br>*(108 x 127)* |
| Piston displacement — cu. in.<br>— *(cm³)* | 852<br>*(13 964)* |
| High idle r.p.m. | 2 050 |
| Horsepower @ full load speed —<br>— *(W)*<br>Peak torque — ft. lbs.<br>— *(J)* | 493<br>*(367 630)*<br>1450 @ 1850 r.p.m.<br>*(1966)* |
| Electrical system<br>Batteries | 24-volt<br>2 - 12-volt |

### Sump tank

Fabricated steel, non-pressurized; baffled for strength and deaeration. Mounted above power unit. Return line filter mounted on internal side of tank, and charge filter mounted in pressurized line between suction pump and charge pumps mounted to power unit. Capacity — 120 gallons *(454.25 L)*.

## Principal Operating Functions —

### Control system

Air controls; control levers for various functions mounted convenient to operator; "dead man" type controls return to "zero speed, brake on" position if released.

### Main load hoist drum

Grooved, 54" *(1.37 m)* root diameter; mounted on anti-friction bearings on non-turning shaft. Drum driven through spur gear reduction by four two-speed, high torque, radial piston hydraulic motors. Infinitely variable rope drum speed control in three speed ranges — low, medium, and high — is standard.

*Low Speed* — Hydraulic motors each set to run at 90 cu. in. *(1 475.10 cm³)* displacement per revolution.

*Medium Speed* — Two hydraulic motors each set to run at 25 cu. in. *(409.75 cm³)*, and two hydraulic motors set to run at 90 cu. in. *(1 475.10 cm³)* displacement per revolution.

*High Speed* — Hydraulic motors each set to run at 25 cu. in. *(409.75 cm³)* displacement per revolution.

**Optional main load hoist drum** — Available is an optional main hoist drum for greater wire rope capacities.

**Auxiliary load hoist drum** — Optional. Smooth, 18" *(0.46 m)* root diameter, 33⅛" *(0.84 m)* wide between flanges; mounted on anti-friction bearings on non-turning shaft. Drum driven through spur gear reduction by one 2-speed, high torque, radial piston hydraulic motor. Infinitely variable speed control in two speed ranges — low and high — is standard.

**Low speed** — Hydraulic motor set to run at 90 cu. in. *(1 475.10 cm³)* displacement per revolution.

**High speed** — Hydraulic motor set to run at 45 cu. in. *(737.55 cm³)* displacement per revolution.

### Drum brakes

External contracting band holding brakes; spring applied, air released. Brake drums involute splined to hydraulic motor counter-shafts at opposite end of shafts from motors. Brakes spring applied when control lever is moved to "brake on" position; air released when control lever is moved to neutral position — at which time hydraulic motor is blocked hydraulically to restrain load.

**Load indicating and overload warning system** — Equipped with a load-moment device for measuring the load and the load radius. Incorporated with this device is an overload warning system which warns the operator when an overload condition exists and inhibits certain functions of the machine.

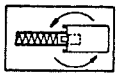

**Swing mechanism**

Two fixed displacement, high torque, radial piston hydraulic motors; each drive one vertical swing shaft. Machine-cut swing pinion splined on each vertical swing shaft.

*Swing Brake* — Disc type, mounted on one hydraulic swing motor, spring applied, air released. Holding brake only, not intended for stopping swing.

*Swing Speed* — 1.45 r.p.m. @ high idle no load; 1.14 r.p.m. @ engine full load speed.

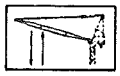

**Independent hydraulic boomhoist**

Grooved, wire rope drum, 24" *(0.61 m)* root diameter; mounted on anti-friction bearings on non-turning shaft. Drum driven through spur gear reduction by one hydraulic motor. Infinitely variable control.

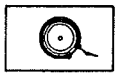

*Boomhoist brake*

Arrangement same as for load hoist drum brakes.

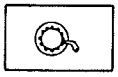

*Drum locking pawl*

Mechanical drum locking pawl is standard; pawl is air released.

**Electrical system**

24-volt; two 12-volt batteries.

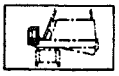

**Operator's cab**

Completely enclosed operator's cab is located between boomfeet for greater visibility. Tinted safety glass is used throughout the cab. The side windows are sliding. Main front windows swing outward for ventilation and ease of cleaning, while the upper and lower front windows are stationary. Rear door slides to the right and has provisions for a padlock. To reduce the sound level, the cab is trimmed with sound proofing. Instrumentation includes tachometer, air pressure gauge, load gauges, and load indicator. Standard equipment also includes two dome lights, a dry chemical fire extinguisher, defroster fan and hot water heater.

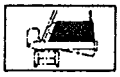

**Machinery cab**

Fabricated steel cab has two doorways at front of cab to provide inside access. Two doorways provide access to the sump tank for service, while a doorway is also provided for access to the hydraulic lines. A ladder and platform is provided to gain access to roof. Handrail is provided around the roof of the machinery cab and winch package. Three lights are also provided inside the machinery cab as standard equipment.

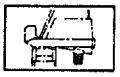

**Counterweight**

Total 94,400# *(42 819 kg)*. One fixed counterweight — 23,600# *(10 705 kg)* — attached to rear of frame. Moving counterweight — 70,800# *(32 114 kg)* consisting of three segments weighing 23,600# *(10 705 kg)* each — is attached to moving trolley which rides on underneath side of revolving upperstructure frame. Counterweight moves toward rear of frame as boom is lowered — provides rear moment to compensate for that which is imposed by lifting load.

## Boom

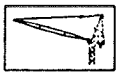

**Heavy duty boom**

Tubular; basic boom two-piece 80' *(24.38 m)* long; 75" wide *(1.90 m)*, 75" *(1.90 m)* deep at connections. Main chords of T-1 alloy steel are 5¼" *(0.13 m)* outside diameter. Maximum boom length is 200' *(60.96 m)*. Expanded metal walkways are provided on top of the boom for access to the boomhead machinery.

*Base section* — 40' *(12.19 m)* long, boom feet are 4¾" *(0.12 m)* wide on 96¼" *(2.44 m)* centers.

*Boom extensions* — Available in 10' *(3.05 m)*, 20' *(6.10 m)*, 30 *(9.14 m)* and 40' *(12.19 m)* lengths with appropriate length pendants.

*Top section* — 40' *(12.19 m)* long. Equipped with two head sheaves. Sheaves are mounted on anti-friction bearings. A hanger block equipped with single sheave is supplied as standard equipment for use with 3 or 4 parts of line.

*Boom connections* — In-line pin connected.

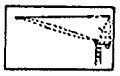

**Boom tip extension**

Optional: Tapered, 10' *(3.05 m)* long, 14,800# *(6 713 kg)* rating. Tubular main chords, 100,000 p.s.i. *(7 031 kg/cm²)* alloy steel; pin-connected to boom top section in fixed position, 18 degrees offset from boom. Equipped with one main load hoist rope sheave and one hoist rope deflector sheave mounted on anti-friction bearings. Mounts on boom lengths 80' *(24.38 m)* through 200' *(60.96 m)*.

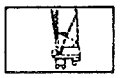

**Boom stops**

Dual, rigid, with spring loaded bumper ends: mounted on mast.

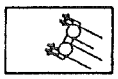

**Boomhoist bridle**

Connects boomhoist wire rope reeving to boom pendants. Equipped with three sheaves, mounted on anti-friction bearings to accommodate 6-part boomhoist wire rope reeving.

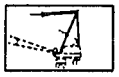

**Mast**

Supports boom suspension system. Wide flange beam construction, pin-connected to revolving upperstructure frame. Equipped with three boomhoist sheaves on anti-friction bearings and one fleeting auxiliary load hoist line deflector sheave.

*Mast ladders and platforms* — Accessibility to the mast for reeving rope and maintenance is provided by upper and lower platforms. The upper platform is located near the top of the mast, while the lower platform is located 10½' *(3.20 m)* above the crane deck. A ladder provides accessibility to both platforms.

FMC

# Auxiliary Equipment

**Boom angle indicator**

Standard; pendulum type mounted on boom base section.

*Load hoist limit switch* — Prevents hoisting load into boom peak.

*Engine alarm* — Trips warning buzzer if water temperature is too high or if engine oil pressure is too low.

*Main air solenoid valve* — When properly adjusted, acts to immobilize all systems in event of an engine failure.

We are constantly improving our products and therefore reserve the right to change designs and specifications

**FMC Corporation** Cable Crane and Excavator Division Cedar Rapids Iowa 52406
Link-Belt® cranes & excavators manufactured in: Cedar Rapids Iowa • Lexington & Bowling Green Kentucky • Ontario Canada • Milan Italy • Queretaro Mexico & Nagoya Japan (under license)

# Link-Belt® TG-1900 Performance Specifications

## Wire rope and rope drum data —

### Main load hoist wire rope length — using 1⅝" *(41 mm)* diameter wire rope.

**Table below** — indicates length of load hoist wire rope required for handling loads between boomfoot level and boom head sheaves.

| Parts of line | Boom lengths | | | | | | | | | | | | | | | |
|---|---|---|---|---|---|---|---|---|---|---|---|---|---|---|---|---|
| | 80' *(24.38 m)* | | 90' *(27.43 m)* | | 100' *(30.48 m)* | | 110' *(33.53 m)* | | 120' *(36.58 m)* | | 130' *(39.62 m)* | | 140' *(42.67 m)* | | 150' *(45.72 m)* | |
| | Feet | *meters* | Feet | *meters* | Feet | *meters* | Feet | *meters* | Feet | *meters* | Feet | *meters* | Feet | *meters* | Feet | *meters* |
| 1 | 220 | *67.06* | 240 | *73.15* | 260 | *79.25* | 280 | *85.34* | 300 | *91.44* | 320 | *97.54* | 340 | *103.63* | 360 | *109 73* |
| 2 | 310 | *94.49* | 340 | *103.63* | 370 | *112.78* | 400 | *121.92* | 430 | *131.06* | 460 | *140.21* | 490 | *149.35* | 520 | *158.50* |
| 3 | 370 | *112.78* | 410 | *124.97* | 450 | *137.16* | 490 | *149.35* | 530 | *161.54* | 570 | *173.74* | 610 | *185.93* | 650 | *198.12* |
| 4 | 450 | *137.16* | 500 | *152.40* | 550 | *167.64* | 600 | *182.88* | 650 | *198.12* | 700 | *213.36* | 750 | *228.60* | 800 | *243.84* |

| Parts of line | Boom lengths | | | | | | | | | |
|---|---|---|---|---|---|---|---|---|---|---|
| | 160' *(48.77 m)* | | 170' *(51.82 m)* | | 180' *(54.86 m)* | | 190' *(57.91 m)* | | 200' *(60.96 m)* | |
| | Feet | *meters* | Feet | *meters* | Feet | *meters* | Feet | *meters* | Feet | *meters* |
| 1 | 380 | *115.82* | 400 | *121.92* | 420 | *128.82* | 440 | *134.11* | 460 | *140.21* |
| 2 | 550 | *167.64* | 580 | *176.78* | 610 | *185.93* | 640 | *195.07* | 670 | *204.22* |
| 3 | 690 | *210.31* | 730 | *222.50* | 770 | *234.70* | 810 | *246.89* | 850 | *259.08* |
| 4 | 850 | *259.08* | 900 | *274.32* | 950 | *289.56* | 1,000 | *304.80* | 1,050 | *320.04* |

**Table below** — indicates additional length of load hoist wire rope which must be added to that shown in above table for handling loads between boomfoot level and ground.

| Parts of line | Tower heights① | | | | | | | |
|---|---|---|---|---|---|---|---|---|
| | 40' *(12.19 m)* | | 80' *(24.38 m)* | | 120' *(36.58 m)* | | 160' *(48.77 m)* | |
| | Feet | *meters* | Feet | *meters* | Feet | *meters* | Feet | *meters* |
| 1 | 50 | *15.24* | 90 | *27.43* | 130 | *39.62* | 170 | *51.82* |
| 2 | 100 | *30.48* | 180 | *54.86* | 260 | *79.25* | 340 | *103.63* |
| 3 | 150 | *45.72* | 270 | *82.30* | 390 | *118 87* | 510 | *155.45* |
| 4 | 200 | *60.96* | 360 | *109.73* | 520 | *158.50* | 680 | *207.26* |

①For tower heights in excess of 160' *(48.77 m)*, multiply the additional tower height by the number of parts of line to be used, and add that total to the amount required for 160' *(48 77 m)* of tower.

### Auxiliary load hoist wire rope lengths — using ⅞" *(22 mm)* diameter wire rope.

**Table below** — indicates length of load hoist wire rope required for handling loads between boomfoot level and boom tip extension head sheaves.

| Parts of line | Boom lengths | | | | | | | | | | | | | | | |
|---|---|---|---|---|---|---|---|---|---|---|---|---|---|---|---|---|
| | 80' *(24.38 m)* | | 90' *(27.43 m)* | | 100' *(30.48 m)* | | 110' *(33.53 m)* | | 120' *(36.58 m)* | | 130' *(39.62 m)* | | 140' *(42.67 m)* | | 150' *(45.72 m)* | |
| | Feet | *meters* | Feet | *meters* | Feet | *meters* | Feet | *meters* | Feet | *meters* | Feet | *meters* | Feet | *meters* | Feet | *meters* |
| 1 | 200 | *60.96* | 220 | *67.06* | 240 | *73.15* | 260 | *79.25* | 280 | *85.34* | 300 | *91.44* | 320 | *97.54* | 340 | *103.63* |

| Parts of line | Boom lengths | | | | | | | | | |
|---|---|---|---|---|---|---|---|---|---|---|
| | 160' *(48.77 m)* | | 170' *(51.82 m)* | | 180' *(54.86 m)* | | 190' *(57.91 m)* | | 200' *(60.96 m)* | |
| | Feet | *meters* | Feet | *meters* | Feet | *meters* | Feet | *meters* | Feet | *meters* |
| 1 | 360 | *109.73* | 380 | *115.82* | 400 | *121.92* | 420 | *128.02* | 440 | *134.11* |

# TG-1900 performance specifications

## Wire rope and rope drum data — (continued)

### Auxiliary load hoist lengths — (continued)

**Table below** — indicates additional length of load hoist wire rope which must be added to that shown in the previous table for handling loads between boomfoot level and ground.

| Parts of line | Tower heights① | | | | | | | |
|---|---|---|---|---|---|---|---|---|
| | 40' *(12.19 m)* | | 80' *(24.38 m)* | | 120' *(36.58 m)* | | 160' *(48.77 m)* | |
| | Feet | *meters* | Feet | *meters* | Feet | *meters* | Feet | *meters* |
| 1 | 50 | *15.24* | 90 | *27.43* | 130 | *39.62* | 170 | *51.82* |

①For tower heights in excess of 160' *(48.77 m)*, add the additional tower height to the amount of wire rope required for 160' *(48.77 m)* of tower.

### Drum wire rope capacities —

| Wire rope layer | Main load hoist drum — 54" *(1.38 m)* root diameter grooved drum 1⅝" *(41 mm)* wire rope | | | | Optional main load hoist drum — 54" *(1.38 m)* root diameter grooved drum 1⅝" *(41 mm)* wire rope | | | | Auxiliary load hoist drum — 18" *(0.46 m)* root diameter smooth lagging ⅞" *(22 mm)* wire rope | | | |
|---|---|---|---|---|---|---|---|---|---|---|---|---|
| | Rope per layer | | Total wire rope | | Rope per layer | | Total wire rope | | Rope per layer | | Total wire rope | |
| | Feet | *meters* | Feet | *meters* | Feet | *meters* | Feet | *meters* | Feet | *meters* | Feet | *meters* |
| 1 | 368 | *112.16* | 368 | *112.16* | 359 | *109.42* | 359 | *109.42* | 172 | *52.43* | 172 | *52.43* |
| 2 | 421 | *128.32* | 789 | *240.48* | 412 | *125.58* | 771 | *235.00* | 199 | *60.65* | 371 | *113.08* |
| 3 | 444 | *135.33* | 1,233 | *375.81* | 434 | *132.28* | 1,205 | *367.28* | 215 | *65.53* | 586 | *178.61* |
| 4 | | | | | 457 | *139 29* | 1,662 | *506.58* | 232 | *70.71* | 818 | *249.32* |
| 5 | | | | | 480 | *146.30* | 2,142 | *652.88* | | | | |

| Wire rope layer | Boomhoist drum — 24" *(0.61 m)* root diameter grooved drum 1¼" *(32 mm)* | | | |
|---|---|---|---|---|
| | Rope per layer | | Total wire rope | |
| | Feet | *meters* | Feet | *meters* |
| 1 | 213 | *64.92* | 213 | *64.92* |
| 2 | 248 | *75.59* | 461 | *140.51* |
| 3 | 271 | *82.60* | 732 | *223.11* |

### Rope size and type —

| Wire rope application | Size and type used |
|---|---|
| Boomhoist | 1¼" *(32 mm)* diameter, Type "DB" |
| Main load hoist | 1⅝" *(41 mm)* diameter, Type "Y" |
| Auxiliary load hoist | ⅞" *(22 mm)* diameter, Type "N" |
| Boom pendants | 1¾" *(44 mm)* diameter, Type "N" |

| Wire rope types |
|---|
| Type "DB" — 6 x 26 (6 x 19 class), Warrington Seale, extra improved plow steel, preformed, independent wire rope center, right lay, regular lay. |
| Type "Y" — 35 x 7 non-rotating special tensile formset. |
| Type "N" — 6 x 25 (6 x 19 class), filler wire, extra improved plow steel, preformed, independent wire rope center, right lay, regular lay. |

# TG-1900 performance specifications

## Wire rope and rope drum data — (continued)

**Permissible line speed and line pull** — based on Type "Y" wire rope strength for main drums and Type "N" wire rope strength for auxiliary drum.

| Main load hoist drum | | | | | | | | | | | |
|---|---|---|---|---|---|---|---|---|---|---|---|
| Root diameter | Wire rope diameter | | Rope layer | Number of wraps | Rope drum operating speeds | Rated line pull① | | Line speed at rated line pull | | No load line speed | |
| | Inches | *mm* | | | | Pounds | *kilograms* | F.p.m. | *m/min* | F.p.m. | *m/min* |
| 54" *(1.37 m)* | 1⅝ | *41.28* | 1 | 25.3 | Low | 63,100 | *28 622* | 136 | *41.45* | 180 | *54.86* |
| | | | 2 | 27.3 | | 61,200 | *27 760* | 144 | *43.89* | 190 | *57.91* |
| | | | 3 | 27.3 | | 58,000 | *26 309* | 152 | *46.33* | 201 | *61.26* |
| | | | 1 | 25.3 | Medium | 40,100 | *18 189* | 209 | *63.70* | 279 | *85.04* |
| | | | 2 | 27.3 | | 37,900 | *17 191* | 222 | *67.67* | 295 | *89.92* |
| | | | 3 | 27.3 | | 35,900 | *16 284* | 234 | *71.32* | 312 | *95.10* |
| | | | 1 | 25.3 | High | 15,500 | *7 031* | 477 | *145.39* | 640 | *195.07* |
| | | | 2 | 27.3 | | 14,600 | *6 623* | 505 | *153.92* | 677 | *206.35* |
| | | | 3 | 27.3 | | 13,900 | *6 305* | 532 | *162.15* | 715 | *217.93* |

| Optional main load hoist drum | | | | | | | | | | | |
|---|---|---|---|---|---|---|---|---|---|---|---|
| Root diameter | Wire rope diameter | | Rope layer | Number of wraps | Rope drum operating speeds | Rated line pull① | | Line speed at rated line pull | | No load line speed | |
| | Inches | *mm* | | | | Pounds | *kilograms* | F.p.m. | *m/min* | F.p.m. | *m/min* |
| 54" *(1.37 m)* | 1⅝ | *41.28* | 1 | 24.7 | Low | 63,100 | *28 622* | 124 | *37.80* | 180 | *54.86* |
| | | | 2 | 26.7 | | 63,100 | *28 622* | 131 | *39.93* | 190 | *57.91* |
| | | | 3 | 26.7 | | 63,100 | *28 622* | 138 | *42.06* | 201 | *61.26* |
| | | | 4 | 26.7 | | 60,800 | *27 579* | 145 | *44.20* | 211 | *64.31* |
| | | | 5 | 26.7 | | 58,000 | *26 309* | 152 | *46.43* | 222 | *67.67* |
| | | | 1 | 24.7 | Medium | 44,300 | *20 094* | 191 | *58.22* | 279 | *85.04* |
| | | | 2 | 26.7 | | 41,900 | *19 006* | 202 | *61.57* | 295 | *89.92* |
| | | | 3 | 26 7 | | 39,700 | *18 008* | 213 | *64.92* | 312 | *95.10* |
| | | | 4 | 26.7 | | 37,700 | *17 101* | 224 | *68.28* | 327 | *99.67* |
| | | | 5 | 26.7 | | 35,900 | *16 284* | 234 | *71.32* | 344 | *104.85* |
| | | | 1 | 24.7 | High | 17,100 | *7 757* | 422 | *128.63* | 640 | *195.07* |
| | | | 2 | 26.7 | | 16,200 | *7 348* | 447 | *136.25* | 677 | *206.35* |
| | | | 3 | 26.7 | | 15,300 | *6 940* | 471 | *143.56* | 715 | *217.93* |
| | | | 4 | 26.7 | | 14,500 | *6 577* | 496 | *151.18* | 752 | *229.21* |
| | | | 5 | 26.7 | | 13,900 | *6 305* | 521 | *158.80* | 789 | *240.49* |

①Permissible line pull based on 1⅝" *(41 mm)* diameter wire rope is restricted to 63,100 lbs. *(28 622 kg)*.

| Optional auxiliary load hoist | | | | | | | | | | | |
|---|---|---|---|---|---|---|---|---|---|---|---|
| Root diameter | Wire rope diameter | | Rope layer | Number of wraps | Rope drum operating speeds | Rated line pull | | Line speed at rated line pull | | No load line speed | |
| | Inches | *mm* | | | | Pounds | *kilograms* | F.p.m. | *m/min* | F.p.m. | *m/min* |
| 18" *(0.46 m)* | ⅞" | *22.23* | 1 | 34.8 | Low | 19,200 | *8 709* | 216 | *65.84* | 252 | *76.81* |
| | | | 2 | 36.8 | | 17,600 | *7 983* | 236 | *71.93* | 276 | *84.12* |
| | | | 3 | 36.8 | | 16,200 | *7 348* | 256 | *78.03* | 299 | *91.14* |
| | | | 4 | 36.8 | | 15,000 | *6 804* | 276 | *84.12* | 322 | *98.15* |
| | | | 1 | 34.8 | High | 5,900 | *2 676* | 424 | *129.24* | 500 | *152.40* |
| | | | 2 | 36.8 | | 5,400 | *2 449* | 463 | *141.12* | 547 | *166.73* |
| | | | 3 | 36.8 | | 5,000 | *2 268* | 502 | *153.01* | 593 | *180.75* |
| | | | 4 | 36.8 | | 4,600 | *2 087* | 541 | *164.90* | 639 | *194.77* |

We are constantly improving our products and therefore reserve the right to change designs and specifications

FMC

**FMC Corporation**

Cable Crane & Excavator Division
1201 Sixth Street Southwest
P.O. Box 2108
Cedar Rapids, Iowa 52406

Link-Belt® cranes & excavators
manufactured in: Cedar Rapids Iowa
Lexington & Bowling Green Kentucky
Ontario Canada • Milan Italy
Queretaro Mexico & Nagoya Japan (under license)

# Link-Belt® TG-1900 lifting crane capacities — without climbing frame

Refer to Notes page 15

**Tower** — **free standing,** without climbing frame; 9′ 9″ x 9′ 9″ (2.97 x 2.97 m) cross section. Tower heights 13′ 7½″ (4.15 m) through 162′ 7½″ (49.57 m) — see footnote Ⓐ.

**Mast** — 43′ 0⅛″ (13.11 m) over-all height.

**Boom** — tubular; 75″ x 75″ (1.91 x 1.91 m) with 40′ (12.19 m) base section, 40′ (12.19 m) top section, 1¾″ (44 mm) diameter boom pendants, with or without boom tip extension.

**Boom tip extension** — tubular; 14,800# (6 713 kg) rating; 10′ (3.05 m) long.

**Counterweights** — Total 94,400# (42 820 kg). Includes one fixed counterweight — 23,600# (10 705 kg) plus one moving counterweight — 70,800# (32 115 kg) consisting of three sections weighing 23,600# (10 705 kg) each.

| Boom | | | | Load radius③ | | Capacities — Main boom only① | | | | | | | |
|---|---|---|---|---|---|---|---|---|---|---|---|---|---|
| | Angle | Boom point height② | | | | 4-part hoist line | | 3-part hoist line | | 2-part hoist line | | 1-part hoist line | |
| Length | Degree | Feet | meters | Feet | meters | Pounds | kilograms | Pounds | kilograms | Pounds | kilograms | Pounds | kilograms |
| 80′ (24.38 m) | 85 5 | 89′ 6″ | 27.27 | 10 | 3.05 | | | | | 115,200 | 52 253 | | |
| | 84 8 | 89′ 5″ | 27.25 | 11 | 3.35 | | | | | | | | |
| | 84.1 | 89′ 4″ | 27.22 | 12 | 3.66 | | | | | | | | |
| | 83 4 | 89′ 2″ | 27.19 | 13 | 3.96 | | | | | | | | |
| | 82.7 | 89′ 1″ | 27.15 | 14 | 4.27 | | | | | | | 57,600 | 26 126 |
| | 81.9 | 88′ 11″ | 27.11 | 15 | 4.57 | | | | | | | | |
| | 78.3 | 88′ 1″ | 26.84 | 20 | 6.10 | 230,400 | 104 507 | 172,800 | 78 380 | | | | |
| | 74.6 | 86′ 10″ | 26.48 | 25 | 7.62 | 230,400 | 104 507 | | | | | | |
| | 70.9 | 85′ 4″ | 26.00 | 30 | 9.14 | 204,200 | 92 623 | | | | | | |
| | 67 0 | 83′ 5″ | 25.42 | 35 | 10.67 | 177,500 | 80 512 | 172,800 | 78 380 | | | | |
| | 63 1 | 81′ 1″ | 24.71 | 40 | 12.19 | 156,800 | 71 123 | 157,100 | 71 259 | | | | |
| | 54.7 | 75′ 0″ | 22.87 | 50 | 15.24 | 126,800 | 57 515 | 127,100 | 57 651 | 115,200 | 52 253 | | |
| | 45 4 | 66′ 8″ | 20.31 | 60 | 18.29 | 106,300 | 48 216 | 106,600 | 48 352 | 106,800 | 48 443 | | |
| | 34.1 | 54′ 8″ | 16.65 | 70 | 21.34 | 90,200 | 40 914 | 90,400 | 41 004 | 90,700 | 41 140 | | |
| | 17.7 | 34′ 1″ | 10.38 | 80 | 24.38 | 69,000 | 31 297 | 69,700 | 31 615 | 71,100 | 32 250 | 57,600 | 26 126 |
| 90′ (27.43 m) | 85.4 | 99′ 5″ | 30.31 | 11 | 3.35 | | | | | 115,100 | 52 208 | | |
| | 84 8 | 99′ 4″ | 30.28 | 12 | 3.66 | | | | | | | | |
| | 84.1 | 99′ 3″ | 30.25 | 13 | 3.96 | | | | | | | | |
| | 83.5 | 99′ 2″ | 30.22 | 14 | 4.27 | | | | | | | 57,500 | 26 081 |
| | 82.8 | 99′ 0″ | 30.18 | 15 | 4.57 | | | | | | | | |
| | 79.6 | 98′ 3″ | 29.95 | 20 | 6.10 | 230,300 | 104 462 | 172,700 | 78 335 | | | | |
| | 76 4 | 97′ 2″ | 29.62 | 25 | 7.62 | 230,300 | 104 462 | | | | | | |
| | 73 1 | 95′ 10″ | 29.21 | 30 | 9.14 | 201,900 | 91 580 | | | | | | |
| | 69 7 | 94′ 2″ | 28.69 | 35 | 10.67 | 175,400 | 79 560 | 172,700 | 78 335 | | | | |
| | 66 3 | 92′ 1″ | 28.08 | 40 | 12.19 | 154,700 | 70 170 | 155,100 | 70 352 | | | | |
| | 59.1 | 86′ 11″ | 26.50 | 50 | 15.24 | 124,800 | 56 608 | 125,200 | 56 789 | 115,100 | 52 208 | | |
| | 51.4 | 80′ 0″ | 24.39 | 60 | 18.29 | 104,300 | 47 309 | 104,600 | 47 445 | 104,900 | 47 581 | | |
| | 42 6 | 70′ 8″ | 21.55 | 70 | 21.34 | 88,600 | 40 188 | 88,900 | 40 324 | 89,100 | 40 415 | | |
| | 32 1 | 57′ 7″ | 17.56 | 80 | 24.38 | 76,500 | 34 699 | 76,700 | 34 790 | 77,000 | 34 926 | | |
| | 16 7 | 35′ 7″ | 10.84 | 90 | 27.43 | 59,700 | 27 079 | 60,300 | 27 351 | 61,400 | 27 850 | 57,500 | 26 081 |
| 100′ (30.48 m) | 85 3 | 109′ 5″ | 33.34 | 12 | 3.66 | | | | | 115,000 | 52 163 | | |
| | 84.7 | 109′ 4″ | 33.31 | 13 | 3 96 | | | | | | | | |
| | 84.1 | 109′ 2″ | 33.28 | 14 | 4.27 | | | | | | | | |
| | 83.6 | 109′ 1″ | 33.25 | 15 | 4.57 | | | | | | | 57,500 | 26 081 |
| | 80 7 | 108′ 5″ | 33.04 | 20 | 6.10 | | | | | | | | |
| | 77 8 | 107′ 5″ | 32.75 | 25 | 7.62 | 230,100 | 104 371 | 172,500 | 78 244 | | | | |
| | 74 8 | 106′ 3″ | 32.38 | 30 | 9.14 | 199,700 | 90 582 | 172,500 | 78 244 | | | | |
| | 71 8 | 104′ 9″ | 31.92 | 35 | 10.67 | 173,300 | 78 607 | 172,500 | 78 244 | | | | |
| | 68 8 | 102′ 11″ | 31.38 | 40 | 12.19 | 152,700 | 69 263 | 153,200 | 69 490 | | | | |
| | 62 5 | 98′ 5″ | 29.99 | 50 | 15.24 | 122,900 | 55 746 | 123,400 | 55 973 | 115,000 | 52 163 | | |
| | 55 8 | 92′ 5″ | 28.17 | 60 | 18.29 | 102,400 | 46 447 | 102,800 | 46 629 | 103,200 | 46 810 | | |
| | 48.5 | 84′ 8″ | 25.81 | 70 | 21.34 | 87,100 | 39 507 | 87,500 | 39 689 | 87,900 | 39 870 | | |
| | 40.4 | 74′ 6″ | 22.70 | 80 | 24.38 | 74,900 | 33 974 | 75,200 | 34 110 | 75,600 | 34 291 | | |
| | 30 4 | 60′ 5″ | 18.41 | 90 | 27.43 | 65,600 | 29 755 | 65,800 | 29 846 | 66,100 | 29 982 | 57,500 | 26 081 |
| | 15 8 | 37′ 0″ | 11.28 | 100 | 30.48 | 51,900 | 23 541 | 52,400 | 23 768 | 53,300 | 24 176 | 55,800 | 25 310 |
| 110′ (33.53 m) | 85.2 | 119′ 4″ | 36.37 | 13 | 3.96 | | | | | 114,900 | 52 117 | | |
| | 84 7 | 119′ 3″ | 36.35 | 14 | 4.27 | | | | | | | | |
| | 84.2 | 119′ 2″ | 36.32 | 15 | 4.57 | | | | | | | | |
| | 81 5 | 118′ 6″ | 36.13 | 20 | 6.10 | — | | | | | | 57,400 | 26 036 |
| | 78.9 | 117′ 8″ | 35.86 | 25 | 7.62 | 229,900 | 104 280 | 172,400 | 78 199 | | | | |
| | 76.2 | 116′ 7″ | 35.53 | 30 | 9.14 | 197,500 | 89 584 | 172,400 | 78 199 | | | | |
| | 73.5 | 115′ 2″ | 35.11 | 35 | 10.67 | 171,300 | 77 700 | 171,800 | 77 927 | | | | |
| | 70 8 | 113′ 7″ | 34.62 | 40 | 12.19 | 150,800 | 68 401 | 151,300 | 68 628 | | | | |
| | 65 2 | 109′ 7″ | 33.39 | 50 | 15.24 | 121,100 | 54 930 | 121,600 | 55 156 | 114,900 | 52 117 | | |
| | 59.3 | 104′ 3″ | 31.78 | 60 | 18.29 | 100,700 | 45 676 | 101,100 | 45 858 | 101,600 | 46 084 | | |
| | 53 0 | 97′ 7″ | 29.74 | 70 | 21.34 | 85,800 | 38 918 | 86,200 | 39 099 | 86,600 | 39 281 | | |
| | 46 1 | 89′ 1″ | 27.14 | 80 | 24.38 | 73,600 | 33 384 | 74,000 | 33 565 | 74,300 | 33 701 | | |
| | 38 4 | 78′ 1″ | 23.79 | 90 | 27.43 | 64,100 | 29 075 | 64,400 | 29 211 | 64,800 | 29 392 | | |
| | 29 0 | 63′ 1″ | 19.22 | 100 | 30.48 | 56,700 | 25 718 | 56,900 | 25 809 | 57,200 | 25 945 | 57,400 | 26 036 |
| | 15.1 | 38′ 4″ | 11.69 | 110 | 33.53 | 45,200 | 20 502 | 45,600 | 20 683 | 46,400 | 21 046 | 48,400 | 21 953 |

(continued)

Ⓐ Consult manufacturer for tower heights greater than 162′ 7½″ (49 57 m).
① Load handled off main boom head sheaves with 10′ (3 05 m) boom tip extension mounted on boom.
② Measured vertically from center of boom head sheave to base of turntable bearing mounting
③ Measured from center of tower base section to center of gravity of freely suspended load.

# TG-1900 lifting crane capacities — without climbing frame

Refer to **Notes** page 15.

| Boom | | | | Load radius③ | | Capacities — Main boom only① | | | | | | | |
|---|---|---|---|---|---|---|---|---|---|---|---|---|---|
| | Angle | Boom point height② | | | | 4-part hoist line | | 3-part hoist line | | 2-part hoist line | | 1-part hoist line | |
| Length | Degree | Feet | meters | Feet | meters | Pounds | kilograms | Pounds | kilograms | Pounds | kilograms | Pounds | kilograms |
| | 85.6 | 129' 4" | 39.43 | 13 | 3 96 | | | | | 114,800 | 52 072 | | |
| | 85.1 | 129' 3" | 39.41 | 14 | 4.27 | | | | | | | | |
| | 84.6 | 129' 2" | 39.38 | 15 | 4.57 | | | | | | | | |
| | 82.2 | 128' 7" | 39.20 | 20 | 6.10 | | | | | | | 57,400 | 26 036 |
| | 79.8 | 127' 10" | 38.96 | 25 | 7.62 | 229,700 | 104 190 | 172,200 | 78 108 | | | | |
| | 77.4 | 126' 10" | 38.66 | 30 | 9.14 | 195,300 | 88 586 | 172,200 | 78 108 | | | | |
| | 74.9 | 125' 7" | 38.28 | 35 | 10.67 | 169,200 | 76 747 | 169,800 | 77 019 | | | | |
| 120' | 72.4 | 124' 2" | 37.83 | 40 | 12 19 | 148,900 | 67 539 | 149,400 | 67 766 | | | | |
| (36.58 m) | 67.4 | 120' 6" | 36.72 | 50 | 15.24 | 119,400 | 54 158 | 119,900 | 54 385 | 114,800 | 52 072 | | |
| | 62.1 | 115' 9" | 35.28 | 60 | 18.29 | 99,000 | 44 905 | 99,500 | 45 132 | 100,000 | 45 359 | | |
| | 56.5 | 109' 10" | 33.47 | 70 | 21.34 | 84,100 | 38 147 | 84,600 | 38 373 | 85,000 | 38 555 | | |
| | 50.6 | 102' 5" | 31.22 | 80 | 24.38 | 72,300 | 32 794 | 72,800 | 33 021 | 73,200 | 33 202 | | |
| | 44.1 | 93' 2" | 28.41 | 90 | 27 43 | 62,800 | 28 485 | 63,200 | 28 667 | 63,600 | 28 848 | 57,400 | 26 036 |
| | 36.7 | 81' 5" | 24.82 | 100 | 30.48 | 55,200 | 25 038 | 55,600 | 25 219 | 55,900 | 25 355 | 56,200 | 25 491 |
| | 27.7 | 65' 7" | 19.99 | 110 | 33.53 | 49,200 | 22 316 | 49,500 | 22 452 | 49,700 | 22 543 | 50,000 | 22 679 |
| | 14.4 | 39' 8" | 12.09 | 120 | 36.58 | 39,500 | 17 916 | 39,800 | 18 052 | 40,400 | 18 325 | 42,000 | 19 050 |
| | 85.5 | 139' 4" | 42.47 | 14 | 4.27 | | | | | 114,700 | 52 027 | | |
| | 85.1 | 139' 3" | 42.44 | 15 | 4.57 | | | | | | | | |
| | 82.8 | 138' 9" | 42.28 | 20 | 6 10 | | | | | | | 57,300 | 25 990 |
| | 80.6 | 138' 0" | 42.06 | 25 | 7.62 | | | | | | | | |
| | 78.4 | 137' 1" | 41.77 | 30 | 9.14 | 193,200 | 87 634 | 172,100 | 78 063 | | | | |
| | 76.1 | 135' 11" | 41.43 | 35 | 10.67 | 167,200 | 75 840 | 167,800 | 76 112 | | | | |
| | 73.8 | 134' 7" | 41.02 | 40 | 12.19 | 147,000 | 66 678 | 147,600 | 66 950 | | | | |
| 130' | 69.2 | 131' 3" | 40.00 | 50 | 15.24 | 117,600 | 53 342 | 118,200 | 53 614 | 114,700 | 52 027 | | |
| (39 62 m) | 64.4 | 126' 11" | 38.69 | 60 | 18.29 | 97,300 | 44 134 | 97,900 | 44 406 | 98,400 | 44 633 | | |
| | 59.4 | 121' 7" | 37.06 | 70 | 21.34 | 82,500 | 37 421 | 83,000 | 37 648 | 83,600 | 37 920 | | |
| | 54.1 | 115' 1" | 35.07 | 80 | 24.38 | 71,100 | 32 250 | 71,600 | 32 477 | 72,200 | 32 749 | | |
| | 48.5 | 107' 0" | 32.62 | 90 | 27.43 | 61,500 | 27 895 | 62,000 | 28 122 | 62,500 | 28 349 | 57,300 | 25 990 |
| | 42.3 | 97' 2" | 29.61 | 100 | 30.48 | 53,900 | 24 448 | 54,300 | 24 630 | 54,600 | 24 856 | 55,200 | 25 038 |
| | 35.2 | 84' 8" | 25.81 | 110 | 33.53 | 47,800 | 21 681 | 48,100 | 21 817 | 48,500 | 21 999 | 48,900 | 22 180 |
| | 26.6 | 68' 0" | 20.73 | 120 | 36.58 | 42,800 | 19 413 | 43,100 | 19 549 | 43,400 | 19 685 | 43,700 | 19 821 |
| | 13.9 | 40' 11" | 12.46 | 130 | 39.62 | 34,400 | 15 603 | 34,700 | 15 739 | 35,300 | 16 011 | 36,600 | 16 601 |
| | 85.4 | 149' 3" | 45.50 | 15 | 4 57 | | | | | 114,600 | 51 981 | | |
| | 83.4 | 148' 9" | 45.35 | 20 | 6 10 | | | | | | | 57,300 | 25 990 |
| | 81.3 | 148' 1" | 45.14 | 25 | 7.62 | | | | | | | | |
| | 79.2 | 147' 3" | 44.88 | 30 | 9.14 | 190,900 | 86 590 | 172,000 | 78 017 | | | | |
| | 77.1 | 146' 2" | 44.56 | 35 | 10.67 | 165,200 | 74 933 | 165,800 | 75 205 | | | | |
| | 75.0 | 145' 0" | 44.18 | 40 | 12.19 | 145,100 | 65 816 | 145,800 | 66 133 | | | | |
| | 70.7 | 141' 11" | 43.24 | 50 | 15.24 | 115,900 | 52 571 | 116,500 | 52 843 | 114,600 | 51 981 | | |
| 140' | 66.3 | 137' 11" | 42.05 | 60 | 18.29 | 95,700 | 43 408 | 96,300 | 43 680 | 96,900 | 43 953 | | |
| (42.67 m) | 61.8 | 133' 1" | 40.56 | 70 | 21.34 | 80,900 | 36 695 | 81,500 | 36 967 | 82,100 | 37 239 | | |
| | 57.0 | 127' 2" | 38.76 | 80 | 24.38 | 69,700 | 31 615 | 70,200 | 31 842 | 70,800 | 32 114 | | |
| | 52.0 | 120' 0" | 36.59 | 90 | 27.43 | 60,400 | 27 396 | 60,900 | 27 623 | 61,400 | 27 850 | 57,300 | 25 990 |
| | 46.6 | 111' 5" | 33.96 | 100 | 30 48 | 52,700 | 23 904 | 53,200 | 24 131 | 53,700 | 24 357 | 54,200 | 24 584 |
| | 40.7 | 100' 11" | 30.77 | 110 | 33 53 | 46,500 | 21 092 | 46,900 | 21 273 | 47,400 | 21 500 | 47,800 | 21 681 |
| | 33.9 | 87' 10" | 26.76 | 120 | 36.58 | 41,400 | 18 778 | 41,800 | 18 960 | 42,200 | 19 141 | 42,500 | 19 277 |
| | 25.6 | 70' 4" | 21.43 | 130 | 39.62 | 37,300 | 16 918 | 37,600 | 17 055 | 37,900 | 17 191 | 38,100 | 17 281 |
| | 13.4 | 42' 1" | 12.83 | 140 | 42.67 | 29,900 | 13 562 | 30,200 | 13 698 | 30,700 | 13 925 | 31,800 | 14 424 |
| | 85.7 | 159' 4" | 48.56 | 15 | 4.57 | | | | | 114,500 | 51 936 | | |
| | 83.8 | 158' 10" | 48.42 | 20 | 6.10 | | | | | | | 57,200 | 25 945 |
| | 81.9 | 158' 3" | 48.22 | 25 | 7.62 | | | | | | | | |
| | 79.9 | 157' 5" | 47.98 | 30 | 9.14 | 188,800 | 85 638 | 171,800 | 77 927 | | | | |
| | 78.0 | 156' 5" | 47.68 | 35 | 10 67 | 163,200 | 74 026 | 163,900 | 74 343 | | | | |
| | 76.0 | 155' 3" | 47.33 | 40 | 12.19 | 143,200 | 64 954 | 143,900 | 65 271 | | | | |
| | 72.1 | 152' 5" | 46.46 | 50 | 15.24 | 114,200 | 51 800 | 114,900 | 52 117 | 114,500 | 51 936 | | |
| | 68.0 | 148' 10" | 45.35 | 60 | 18.29 | 94,100 | 42 683 | 94,700 | 42 955 | 95,400 | 43 272 | | |
| 150' | 63.8 | 144' 4" | 43.99 | 70 | 21.34 | 79,400 | 36 015 | 80,000 | 36 287 | 80,700 | 36 604 | | |
| (45.72 m) | 59.5 | 138' 11" | 42.34 | 80 | 24.38 | 68,200 | 30 935 | 68,800 | 31 207 | 69,400 | 31 479 | | |
| | 54.9 | 132' 6" | 40.38 | 90 | 27 43 | 59,300 | 26 898 | 59,800 | 27 124 | 60,400 | 27 396 | 57,200 | 25 945 |
| | 50.1 | 124' 10" | 38.04 | 100 | 30.48 | 51,500 | 23 360 | 52,100 | 23 632 | 52,700 | 23 904 | 53,200 | 24 131 |
| | 44.9 | 115' 8" | 35.25 | 110 | 33.53 | 45,300 | 20 547 | 45,800 | 20 774 | 46,300 | 21 001 | 46,800 | 21 228 |
| | 39.2 | 104' 7" | 31.87 | 120 | 36.58 | 40,100 | 18 189 | 40,600 | 18 415 | 41,100 | 18 642 | 41,500 | 18 824 |
| | 32.7 | 90' 9" | 27.67 | 130 | 39.62 | 35,900 | 16 283 | 36,300 | 16 465 | 36,700 | 16 646 | 37,100 | 16 828 |
| | 24.8 | 72' 7" | 22.11 | 140 | 42.67 | 32,300 | 14 651 | 32,600 | 14 787 | 32,900 | 14 923 | 33,200 | 15 059 |
| | 12.9 | 43' 3" | 13.18 | 150 | 45 72 | 25,900 | 11 748 | 26,200 | 11 884 | 26,600 | 12 065 | 27,500 | 12 473 |

(continued)

①Load handled off main boom head sheaves with 10' (3.05 m) boom tip extension mounted on boom.
②Measured vertically from center of boom head sheave to base of turntable bearing mounting.
③Measured from center of tower base section to center of gravity of freely suspended load.

# TG-1900 lifting crane capacities — without climbing frame

Refer to Notes page 15.

| Boom | | | | Load radius③ | | Capacities — Main boom only① | | | | | | | |
|---|---|---|---|---|---|---|---|---|---|---|---|---|---|
| | Angle | Boom point height② | | | | 4-part hoist line | | 3-part hoist line | | 2-part hoist line | | 1-part hoist line | |
| Length | Degree | Feet | meters | Feet | meters | Pounds | kilograms | Pounds | kilograms | Pounds | kilograms | Pounds | kilograms |
| 160′ (48.77 m) | 84.2 | 168′ 11″ | 51 48 | 20 | 6.10 | | | | | 114,400 | 51 890 | | |
| | 82.4 | 168′ 4″ | 51.30 | 25 | 7.62 | | | | | ↑ | ↑ | 57,200 | 25 945 |
| | 80 6 | 167′ 7″ | 51.07 | 30 | 9.14 | | | | | | | ↑ | ↑ |
| | 78.8 | 166′ 8″ | 50.79 | 35 | 10.67 | 161,100 | 73 073 | 161,900 | 73 436 | | | | |
| | 76.9 | 165′ 7″ | 50 47 | 40 | 12.19 | 141,300 | 64 092 | 142,100 | 64 455 | 114,400 | 51 890 | | |
| | 73.2 | 162′ 11″ | 49.65 | 50 | 15.24 | 112,400 | 50 983 | 113,200 | 51 346 | 113,900 | 51 664 | | |
| | 69.4 | 159′ 6″ | 48.62 | 60 | 18.29 | 92,500 | 41 957 | 93,200 | 42 274 | 93,900 | 42 592 | | |
| | 65.6 | 155′ 5″ | 47.36 | 70 | 21.34 | 77,800 | 35 289 | 78,500 | 35 607 | 79,200 | 35 924 | | |
| | 61.6 | 150′ 5″ | 45.84 | 80 | 24.38 | 66,700 | 30 254 | 67,300 | 30 526 | 68,000 | 30 844 | | |
| | 57.4 | 144′ 6″ | 44.05 | 90 | 27.43 | 57,900 | 26 263 | 58,600 | 26 580 | 59,200 | 26 852 | 57,200 | 25 945 |
| | 53.0 | 137′ 7″ | 41.93 | 100 | 30 48 | 50,400 | 22 861 | 51,000 | 23 133 | 51,700 | 23 450 | 52,300 | 23 722 |
| | 48.4 | 129′ 5″ | 39.44 | 110 | 33.53 | 44,100 | 20 003 | 44,700 | 20 275 | 45,300 | 20 547 | 45,900 | 20 819 |
| | 43 4 | 119′ 8″ | 36 49 | 120 | 36.58 | 39,000 | 17 690 | 39,500 | 17 916 | 40,000 | 18 143 | 40,500 | 18 370 |
| | 37.9 | 108′ 1″ | 32.94 | 130 | 39.62 | 34,600 | 15 694 | 35,100 | 15 921 | 35,600 | 16 147 | 36,100 | 16 374 |
| | 31.6 | 93′ 8″ | 28.55 | 140 | 42.67 | 30,900 | 14 016 | 31,400 | 14 242 | 31,800 | 14 424 | 32,200 | 14 605 |
| | 24 0 | 74′ 9″ | 22.77 | 150 | 45.72 | 27,900 | 12 655 | 28,200 | 12 791 | 28,500 | 12 927 | 28,900 | 13 108 |
| | 12.5 | 44′ 4″ | 13.52 | 160 | 48.77 | 22,300 | 10 115 | 22,600 | 10 251 | 22,900 | 10 387 | 23,700 | 10 750 |
| 170′ (51.82 m) | 84.5 | 178′ 11″ | 54.54 | 20 | 6.10 | | | | | 114,300 | 51 845 | | |
| | 82.8 | 178′ 5″ | 54.37 | 25 | 7.62 | | | | | ↑ | ↑ | 57,100 | 25 900 |
| | 81.1 | 177′ 8″ | 54.16 | 30 | 9.14 | | | | | | | ↑ | ↑ |
| | 79.4 | 176′ 10″ | 53.90 | 35 | 10.67 | 159,100 | 72 166 | 159,900 | 72 529 | | | | |
| | 77.7 | 175′ 10″ | 53.59 | 40 | 12.19 | 139,400 | 63 230 | 140,200 | 63 593 | 114,300 | 51 845 | | |
| | 74.2 | 173′ 4″ | 52.83 | 50 | 15.24 | 110,700 | 50 212 | 111,500 | 50 575 | 112,300 | 50 938 | | |
| | 70.7 | 170′ 2″ | 51.87 | 60 | 18.29 | 90,900 | 41 231 | 91,600 | 41 549 | 92,400 | 41 911 | | |
| | 67.1 | 166′ 4″ | 50.69 | 70 | 21.34 | 76,300 | 34 609 | 77,000 | 34 926 | 77,800 | 35 289 | | |
| | 63 4 | 161′ 8″ | 49.28 | 80 | 24.38 | 65,200 | 29 574 | 65,900 | 29 891 | 66,700 | 30 254 | | |
| | 59 5 | 156′ 3″ | 47.62 | 90 | 27.43 | 56,500 | 25 627 | 57,200 | 25 945 | 57,900 | 26 263 | 57,100 | 25 900 |
| | 55.5 | 149′ 11″ | 45.68 | 100 | 30.48 | 49,400 | 22 407 | 50,000 | 22 679 | 50,700 | 22 997 | 51,400 | 23 314 |
| | 51.3 | 142′ 6″ | 43.42 | 110 | 33 53 | 43,000 | 19 504 | 43,700 | 19 821 | 44,300 | 20 094 | 45,000 | 20 411 |
| | 46.9 | 133′ 10″ | 40.78 | 120 | 36 58 | 37,800 | 17 145 | 38,400 | 17 417 | 39,000 | 17 690 | 39,600 | 17 962 |
| | 42.1 | 123′ 7″ | 37.68 | 130 | 39 62 | 33,500 | 15 195 | 34,000 | 15 422 | 34,600 | 15 694 | 35,100 | 15 921 |
| | 36.8 | 111′ 5″ | 33.97 | 140 | 42.67 | 29,700 | 13 471 | 30,200 | 13 698 | 30,700 | 13 925 | 31,200 | 14 152 |
| | 30.7 | 96′ 6″ | 29.40 | 150 | 45 72 | 26,600 | 12 065 | 27,000 | 12 246 | 27,400 | 12 428 | 27,800 | 12 609 |
| | 23.2 | 76′ 10″ | 23.41 | 160 | 48 77 | 24,000 | 10 886 | 24,300 | 11 022 | 24,600 | 11 158 | 25,000 | 11 339 |
| | 12.1 | 45′ 5″ | 13.85 | 170 | 51.82 | 19,000 | 8 618 | 19,200 | 8 708 | 19,600 | 8 890 | 20,200 | 9 162 |
| 180′ (54.86 m) | 84.8 | 189′ 0″ | 57.60 | 20 | 6.10 | | | | | 114,200 | 51 800 | | |
| | 83.2 | 188′ 6″ | 57.45 | 25 | 7.62 | | | | | ↑ | ↑ | 57,100 | 25 900 |
| | 81.6 | 187′ 10″ | 57.24 | 30 | 9.14 | | | | | | | ↑ | ↑ |
| | 80.0 | 187′ 0″ | 57.00 | 35 | 10.67 | 152,500 | 69 172 | 153,400 | 69 581 | | | | |
| | 78.4 | 186′ 1″ | 56.71 | 40 | 12.19 | 137,500 | 62 368 | 138,300 | 62 731 | 114,200 | 51 800 | | |
| | 75.1 | 183′ 8″ | 55.99 | 50 | 15.24 | 109,000 | 49 441 | 109,800 | 49 804 | 110,700 | 50 212 | | |
| | 71.8 | 180′ 9″ | 55.08 | 60 | 18.29 | 89,200 | 40 460 | 90,100 | 40 868 | 90,900 | 41 231 | | |
| | 68 4 | 177′ 1″ | 53.98 | 70 | 21.34 | 74,800 | 33 928 | 75,600 | 34 291 | 76,400 | 34 654 | | |
| | 65.0 | 172′ 10″ | 52.67 | 80 | 24 38 | 63,700 | 28 893 | 64,500 | 29 256 | 65,300 | 29 619 | | |
| | 61.4 | 167′ 9″ | 51.13 | 90 | 27.43 | 55,000 | 24 947 | 55,800 | 25 310 | 56,600 | 25 673 | 57,100 | 25 900 |
| | 57.7 | 161′ 10″ | 49.33 | 100 | 30.48 | 48,100 | 21 817 | 48,800 | 22 135 | 49,500 | 22 452 | 50,300 | 22 815 |
| | 53.8 | 155′ 1″ | 47.26 | 110 | 33.53 | 42,000 | 19 050 | 42,700 | 19 368 | 43,400 | 19 685 | 44,100 | 20 003 |
| | 49.8 | 147′ 2″ | 44.86 | 120 | 36.58 | 36,700 | 16 646 | 37,400 | 16 964 | 38,000 | 17 236 | 38,700 | 17 554 |
| | 45.5 | 138′ 1″ | 42.08 | 130 | 39.62 | 32,300 | 14 651 | 32,900 | 14 923 | 33,600 | 15 240 | 34,200 | 15 512 |
| | 40.8 | 127′ 5″ | 38.83 | 140 | 42.67 | 28,600 | 12 972 | 29,100 | 13 199 | 29,700 | 13 471 | 30,300 | 13 743 |
| | 35.7 | 114′ 9″ | 34.96 | 150 | 45.72 | 25,300 | 11 475 | 25,800 | 11 702 | 26,300 | 11 929 | 26,900 | 12 201 |
| | 29.8 | 99′ 2″ | 30.22 | 160 | 48.77 | 22,600 | 10 251 | 23,100 | 10 477 | 23,500 | 10 659 | 23,900 | 10 840 |
| | 22.6 | 78′ 10″ | 24.03 | 170 | 51.82 | 20,400 | 9 253 | 20,700 | 9 389 | 21,100 | 9 570 | 21,400 | 9 706 |
| | 11.8 | 46′ 6″ | 14.17 | 180 | 54.86 | 16,000 | 7 257 | 16,200 | 7 348 | 16,500 | 7 484 | 17,100 | 7 756 |

(continued)

①Load handled off main boom head sheaves with 10′ (3.05 m) boom tip extension mounted on boom.
②Measured vertically from center of boom head sheave to base of turntable bearing mounting.
③Measured from center of tower base section to center of gravity of freely suspended load

# TG-1900 lifting crane capacities — without climbing frame

Refer to Notes page 15.

| Boom | | | | Load radius③ | | Capacities — Main boom only① | | | | | | | |
|---|---|---|---|---|---|---|---|---|---|---|---|---|---|
| | Angle | Boom point height② | | | | 4-part hoist line | | 3-part hoist line | | 2-part hoist line | | 1-part hoist line | |
| Length | Degree | Feet | meters | Feet | meters | Pounds | kilograms | Pounds | kilograms | Pounds | kilograms | Pounds | kilograms |
| 190' (57.91 m) | 85.1 | 199' 0" | 60.66 | 20 | 6.10 | | | | | 114,100 | 51 754 | | |
| | 83.6 | 198' 6" | 60.51 | 25 | 7.62 | | | | | ↕ | ↕ | 57,000 | 25 854 |
| | 82.1 | 197' 11" | 60.32 | 30 | 9.14 | | | | | | | ↕ | ↕ |
| | 80 5 | 197' 2" | 60.09 | 35 | 10.67 | 139,400 | 63 230 | 140,300 | 63 639 | | | | |
| | 79.0 | 196' 3" | 59.81 | 40 | 12.19 | 134,200 | 60 872 | 136,500 | 61 915 | 114,100 | 51 754 | | |
| | 75.9 | 194' 0" | 59.14 | 50 | 15.24 | 105,500 | 47 854 | 108,000 | 48 987 | 109,000 | 49 441 | | |
| | 72.8 | 191' 3" | 58.28 | 60 | 18.29 | 86,900 | 39 417 | 88,500 | 40 142 | 89,400 | 40 551 | | |
| | 69.6 | 187' 10" | 57.25 | 70 | 21.34 | 73,200 | 33 202 | 74,100 | 33 611 | 75,000 | 34 019 | | |
| | 66.4 | 183' 9" | 56.01 | 80 | 24.38 | 62,300 | 28 258 | 63,100 | 28 621 | 63,900 | 28 984 | 57,000 | 25 854 |
| | 63.0 | 179' 0" | 54.57 | 90 | 27.43 | 53,600 | 24 312 | 54,400 | 24 675 | 55,300 | 25 083 | 56,100 | 25 446 |
| | 59.6 | 173' 7" | 52.90 | 100 | 30.48 | 46,700 | 21 182 | 47,500 | 21 545 | 48,300 | 21 908 | 49,000 | 22 226 |
| | 56.0 | 167' 3" | 50.98 | 110 | 33.53 | 40,900 | 18 551 | 41,700 | 18 914 | 42,400 | 19 232 | 43,200 | 19 595 |
| | 52.3 | 160' 0" | 48.78 | 120 | 36.58 | 35,700 | 16 193 | 36,400 | 16 510 | 37,100 | 16 828 | 37,800 | 17 145 |
| | 48.4 | 151' 9" | 46.25 | 130 | 39.62 | 31,200 | 14 152 | 31,900 | 14 469 | 32,600 | 14 787 | 33,300 | 15 104 |
| | 44.2 | 142' 2" | 43.34 | 140 | 42.67 | 27,500 | 12 473 | 28,100 | 12 745 | 28,700 | 13 018 | 29,400 | 13 335 |
| | 39.7 | 131' 1" | 39.95 | 150 | 45.72 | 24,200 | 10 976 | 24,800 | 11·249 | 25,400 | 11 521 | 25,900 | 11 748 |
| | 34.7 | 117' 11" | 35.93 | 160 | 48.77 | 21,400 | 9 706 | 21,900 | 9 933 | 22,500 | 10 205 | 23,000 | 10 432 |
| | 29.0 | 101' 9" | 31.02 | 170 | 51.82 | 19,100 | 8 663 | 19,500 | 8 845 | 20,000 | 9 071 | 20,400 | 9 253 |
| | 22.0 | 80' 9" | 24.63 | 180 | 54.86 | 17,200 | 7 801 | 17,500 | 7 937 | 17,900 | 8 119 | 18,200 | 8 255 |
| | 11.5 | 47' 6" | 14.48 | 190 | 57.91 | 13,200 | 5 987 | 13,400 | 6 078 | 13,700 | 6 214 | 14,200 | 6 441 |
| 200' (60 96 m) | 85.4 | 209' 1" | 63.72 | 20 | 6.10 | | | | | 114,000 | 51 709 | | |
| | 83.9 | 208' 7" | 63.58 | 25 | 7.62 | | | | | ↕ | ↕ | 57,000 | 25 854 |
| | 82.5 | 208' 0" | 63.40 | 30 | 9.14 | | | | | | | ↕ | ↕ |
| | 81.0 | 207' 3" | 63.18 | 35 | 10.67 | | | | | | | | |
| | 79.6 | 206' 5" | 62.92 | 40 | 12.19 | 125,300 | 56 835 | 126,300 | 57 288 | 114,000 | 51 709 | | |
| | 76.6 | 204' 4" | 62.27 | 50 | 15.24 | 101,600 | 46 084 | 104,200 | 47 264 | 107,400 | 48 715 | | |
| | 73.7 | 201' 8" | 61.47 | 60 | 18.29 | 83,400 | 37 829 | 85,500 | 38 782 | 87,900 | 39 870 | | |
| | 70.7 | 198' 5" | 60.49 | 70 | 21.34 | 70,600 | 32 023 | 72,300 | 32 794 | 73,500 | 33 339 | | |
| | 67.6 | 194' 8" | 59.32 | 80 | 24.38 | 60,800 | 27 578 | 61,700 | 27 986 | 62,600 | 28 394 | 57,000 | 25 854 |
| | 64.5 | 190' 2" | 57.97 | 90 | 27.43 | 52,200 | 23 677 | 53,100 | 24 085 | 53,900 | 24 448 | 54,800 | 24 856 |
| | 61.2 | 185' 1" | 56.41 | 100 | 30.48 | 45,300 | 20 547 | 46,100 | 20 910 | 47,000 | 21 318 | 47,800 | 21 681 |
| | 57.9 | 179' 2" | 54.62 | 110 | 33.53 | 39,600 | 17 962 | 40,400 | 18 325 | 41,300 | 18 733 | 42,100 | 19 096 |
| | 54.5 | 172' 6" | 52.58 | 120 | 36.58 | 34,600 | 15 694 | 35,400 | 16 057 | 36,200 | 16 420 | 36,900 | 16 737 |
| | 50.9 | 164' 10" | 50.25 | 130 | 39.62 | 30,200 | 13 698 | 30,900 | 14 016 | 31,700 | 14 378 | 32,400 | 14 696 |
| | 47.1 | 156' 2" | 47.60 | 140 | 42.67 | 26,400 | 11 974 | 27,100 | 12 292 | 27,800 | 12 609 | 28,500 | 12 927 |
| | 43.0 | 146' 2" | 44.56 | 150 | 45.72 | 23,100 | 10 477 | 23,700 | 10 750 | 24,400 | 11 067 | 25,000 | 11 339 |
| | 38.6 | 134' 7" | 41.03 | 160 | 48.77 | 20,300 | 9 207 | 20,900 | 9 480 | 21,500 | 9 752 | 22,100 | 10 024 |
| | 33.8 | 121' 0" | 36.87 | 170 | 51.82 | 17,900 | 8 119 | 18,400 | 8 346 | 18,900 | 8 572 | 19,500 | 8 845 |
| | 28.2 | 104' 4" | 31.80 | 180 | 54.86 | 15,800 | 7 166 | 16,300 | 7 393 | 16,700 | 7 574 | 17,200 | 7 801 |
| | 21.4 | 82' 8" | 25.21 | 190 | 57.91 | 14,200 | 6 441 | 14,500 | 6 577 | 14,900 | 6 758 | 15,200 | 6 894 |
| | 11.2 | 48' 6" | 14.78 | 200 | 60.96 | 10,600 | 4 808 | 10,800 | 4 898 | 11,100 | 5 034 | 11,500 | 5 216 |

①Load handled off main boom head sheaves with 10' (3.05 m) boom tip extension mounted on boom.
②Measured vertically from center of boom head sheave to base of turntable bearing mounting.
③Measured from center of tower base section to center of gravity of freely suspended load.

# TG-1900 lifting crane capacities — with climbing frame

Refer to **Notes** page 15.

**Tower** — **free standing,** with climbing frame; 9′ 9″ x 9′ 9″ (2.97 x 2.97 m) cross section. Tower heights 40′ 0″ (12.19 m) through 162′ 7½″ (49.57 m) — see footnote⑧.

**Mast** — 43′ 0⅛″ (13.11 m) over-all height.

**Boom** — tubular; 75″ x 75″ (1.91 x 1.91 m) with 40′ (12.19 m) base section, 40′ (12.19 m) top section, 1¾″ (44 mm) diameter boom pendants, with or without boom tip extension.

**Boom tip extension** — tubular; 14,800# (6 713 kg) rating; 10′ (3.05 m) long.

**Counterweights** — Total 94,400# (42 820 kg). Includes one fixed counterweight — 23,600# (10 705 kg) plus one moving counterweight — 70,800# (32 115 kg) consisting of three sections weighing 23,600# (10 705 kg) each.

| Boom | | | | Load radius② | | Capacities — Main boom only① | | | | | | | |
|---|---|---|---|---|---|---|---|---|---|---|---|---|---|
| | Angle | Boom point height③ | | | | 4-part hoist line | | 3-part hoist line | | 2-part hoist line | | 1-part hoist line | |
| Length | Degree | Feet | meters | Feet | meters | Pounds | kilograms | Pounds | kilograms | Pounds | kilograms | Pounds | kilograms |
| 80′ (24.38 m) | 85.5 | 89′ 6″ | 27.27 | 10 | 3.05 | | | | | 115,200 | 52 253 | | |
| | 84.8 | 89′ 5″ | 27.25 | 11 | 3.35 | | | | | | | | |
| | 84.1 | 89′ 4″ | 27.22 | 12 | 3.66 | | | | | | | | |
| | 83.4 | 89′ 2″ | 27.19 | 13 | 3.96 | | | | | | | 57,600 | 26 126 |
| | 82.7 | 89′ 1″ | 27.15 | 14 | 4.27 | | | | | | | | |
| | 81.9 | 88′ 11″ | 27.11 | 15 | 4.57 | | | | | | | | |
| | 78.3 | 88′ 1″ | 26.84 | 20 | 6.10 | 230,400 | 104 507 | 172,800 | 78 380 | | | | |
| | 74.6 | 86′ 10″ | 26.48 | 25 | 7.62 | 230,400 | 104 507 | 172,800 | 78 380 | | | | |
| | 70.9 | 85′ 4″ | 26.00 | 30 | 9.14 | 196,600 | 89 176 | 172,800 | 78 380 | | | | |
| | 67.0 | 83′ 5″ | 25.42 | 35 | 10.67 | 170,800 | 77 473 | 171,200 | 77 655 | | | | |
| | 63.1 | 81′ 1″ | 24.71 | 40 | 12.19 | 150,800 | 68 401 | 151,200 | 68 583 | | | | |
| | 54.7 | 75′ 0″ | 22.87 | 50 | 15.24 | 121,900 | 55 292 | 122,200 | 55 428 | 115,200 | 52 253 | | |
| | 45.4 | 66′ 8″ | 20.31 | 60 | 18.29 | 102,100 | 46 311 | 102,400 | 46 447 | 102,700 | 46 583 | | |
| | 34.1 | 54′ 8″ | 16.65 | 70 | 21.34 | 88,000 | 39 916 | 88,200 | 40 006 | 88,400 | 40 097 | | |
| | 17.7 | 34′ 1″ | 10.38 | 80 | 24.38 | 69,000 | 31 297 | 69,700 | 31 615 | 71,100 | 32 250 | 57,600 | 26 126 |
| 90′ (27.43 m) | 85.4 | 99′ 5″ | 30.31 | 11 | 3.35 | | | | | 115,100 | 52 208 | | |
| | 84.8 | 99′ 4″ | 30.28 | 12 | 3.66 | | | | | | | | |
| | 84.1 | 99′ 3″ | 30.25 | 13 | 3.96 | | | | | | | | |
| | 83.5 | 99′ 2″ | 30.22 | 14 | 4.27 | | | | | | | 57,500 | 26 081 |
| | 82.8 | 99′ 0″ | 30.18 | 15 | 4.57 | | | | | | | | |
| | 79.6 | 98′ 3″ | 29.95 | 20 | 6.10 | 230,300 | 104 462 | 172,700 | 78 335 | | | | |
| | 76.4 | 97′ 2″ | 29.62 | 25 | 7.62 | 228,500 | 103 645 | 172,700 | 78 335 | | | | |
| | 73.1 | 95′ 10″ | 29.21 | 30 | 9.14 | 194,300 | 88 133 | 172,700 | 78 335 | | | | |
| | 69.7 | 94′ 2″ | 28.69 | 35 | 10.67 | 168,700 | 76 521 | 169,100 | 76 702 | | | | |
| | 66.3 | 92′ 1″ | 28.08 | 40 | 12.19 | 148,700 | 67 449 | 149,100 | 67 630 | | | | |
| | 59.1 | 86′ 11″ | 26.50 | 50 | 15.24 | 119,900 | 54 385 | 120,300 | 54 567 | 115,100 | 52 208 | | |
| | 51.4 | 80′ 0″ | 24.39 | 60 | 18.29 | 100,100 | 45 404 | 100,400 | 45 540 | 100,800 | 45 722 | | |
| | 42.6 | 70′ 8″ | 21.55 | 70 | 21 34 | 85,800 | 38 918 | 86,100 | 39 054 | 86,400 | 39 190 | | |
| | 32.1 | 57′ 7″ | 17.56 | 80 | 24.38 | 75,200 | 34 110 | 75,400 | 34 200 | 75,600 | 34 291 | | |
| | 16.7 | 35′ 7″ | 10.84 | 90 | 27.43 | 59,700 | 27 079 | 60,300 | 27 351 | 61,400 | 27 850 | 57,500 | 26 081 |
| 100′ (30.48 m) | 85.3 | 109′ 5″ | 33.34 | 12 | 3.66 | | | | | 115,000 | 52 163 | | |
| | 84.7 | 109′ 4″ | 33.31 | 13 | 3.96 | | | | | | | | |
| | 84 1 | 109′ 2″ | 33.28 | 14 | 4.27 | | | | | | | | |
| | 83.6 | 109′ 1″ | 33.25 | 15 | 4.57 | | | | | | | 57,500 | 26 081 |
| | 80.7 | 108′ 5″ | 33.04 | 20 | 6.10 | | | | | | | | |
| | 77.8 | 107′ 5″ | 32.75 | 25 | 7.62 | 226,100 | 102 557 | 172,500 | 78 244 | | | | |
| | 74.8 | 106′ 3″ | 32.38 | 30 | 9.14 | 192,100 | 87 135 | 172,500 | 78 244 | | | | |
| | 71.8 | 104′ 9″ | 31.92 | 35 | 10.67 | 166,600 | 75 568 | 167,000 | 75 749 | | | | |
| | 68.8 | 102′ 11″ | 31.38 | 40 | 12.19 | 146,800 | 66 587 | 147,200 | 66 768 | | | | |
| | 62.5 | 98′ 5″ | 29.99 | 50 | 15.24 | 118,000 | 53 523 | 118,400 | 53 705 | 115,000 | 52 163 | | |
| | 55.8 | 92′ 5″ | 28.17 | 60 | 18.29 | 98,200 | 44 542 | 98,600 | 44 724 | 99,000 | 44 905 | | |
| | 48.5 | 84′ 8″ | 25.81 | 70 | 21.34 | 83,900 | 38 056 | 84,200 | 38 192 | 84,600 | 38 373 | | |
| | 40.4 | 74′ 6″ | 22.70 | 80 | 24.38 | 73,100 | 33 157 | 73,400 | 33 293 | 73,700 | 33 429 | | |
| | 30.4 | 60′ 5″ | 18.41 | 90 | 27.43 | 64,900 | 29 438 | 65,100 | 29 528 | 65,400 | 29 664 | 57,500 | 26 081 |
| | 15.8 | 37′ 0″ | 11.28 | 100 | 30.48 | 51,900 | 23 541 | 52,400 | 23 768 | 53,300 | 24 176 | 55,800 | 25 310 |
| 110′ (33.53 m) | 85.2 | 119′ 4″ | 36.37 | 13 | 3.96 | | | | | 114,900 | 52 117 | | |
| | 84.7 | 119′ 3″ | 36.35 | 14 | 4.27 | | | | | | | | |
| | 84.2 | 119′ 2″ | 36.32 | 15 | 4 57 | | | | | | | | |
| | 81.5 | 118′ 6″ | 36.13 | 20 | 6.10 | | | | | | | 57,400 | 26 036 |
| | 78.9 | 117′ 8″ | 35.86 | 25 | 7.62 | 223,700 | 101 468 | 172,400 | 78 199 | | | | |
| | 76.2 | 116′ 7″ | 35.53 | 30 | 9.14 | 189,900 | 86 137 | 172,400 | 78 199 | | | | |
| | 73.5 | 115′ 2″ | 35.11 | 35 | 10.67 | 164,600 | 74 661 | 165,100 | 74 888 | | | | |
| | 70.8 | 113′ 7″ | 34.62 | 40 | 12.19 | 144,900 | 65 725 | 145,400 | 65 952 | | | | |
| | 65.2 | 109′ 7″ | 33.39 | 50 | 15.24 | 116,200 | 52 707 | 116,700 | 52 934 | 114,900 | 52 117 | | |
| | 59.3 | 104′ 3″ | 31.78 | 60 | 18.29 | 96,500 | 43 771 | 96,900 | 43 953 | 97,400 | 44 179 | | |
| | 53.0 | 97′ 7″ | 29.74 | 70 | 21.34 | 82,100 | 37 239 | 82,500 | 37 421 | 83,000 | 37 648 | | |
| | 46.1 | 89′ 1″ | 27.14 | 80 | 24.38 | 71,300 | 32 341 | 71,700 | 32 522 | 72,100 | 32 704 | | |
| | 38.4 | 78′ 1″ | 23.79 | 90 | 27.43 | 62,900 | 28 530 | 63,300 | 28 712 | 63,600 | 28 848 | 57,400 | 26 036 |
| | 29.0 | 63′ 1″ | 19.22 | 100 | 30.48 | 56,400 | 25 582 | 56,700 | 25 718 | 57,000 | 25 854 | 57,200 | 25 945 |
| | 15.1 | 38′ 4″ | 11.69 | 110 | 33.53 | 45,200 | 20 502 | 45,600 | 20 683 | 46,400 | 21 046 | 48,400 | 21 953 |

(continued)

⑧Consult manufacturer for tower heights greater than 162′ 7½″ (49.57 m).
①Load handled off main boom head sheaves with 10′ (3.05 m) boom tip extension mounted on boom.
②Measured vertically from center of boom head sheave to base of turntable bearing mounting
③Measured from center of tower base section to center of gravity of freely suspended load.

# TG-1900 lifting crane capacities — with climbing frame

Refer to **Notes** page 15.

| Boom | | | | Load radius③ | | Capacities — Main boom only① | | | | | | | |
|---|---|---|---|---|---|---|---|---|---|---|---|---|---|
| | Angle | Boom point height② | | | | 4-part hoist line | | 3-part hoist line | | 2-part hoist line | | 1-part hoist line | |
| Length | Degree | Feet | meters | Feet | meters | Pounds | kilograms | Pounds | kilograms | Pounds | kilograms | Pounds | kilograms |
| 120' (36.58 m) | 85.6 | 129' 4" | 39.43 | 13 | 3.96 | | | | | 114,800 | 52 072 | | |
| | 85.1 | 129' 3" | 39.41 | 14 | 4.27 | | | | | | | | |
| | 84.6 | 129' 2" | 39.38 | 15 | 4.57 | | | | | | | | |
| | 82.2 | 128' 7" | 39.20 | 20 | 6.10 | | | | | | | 57,400 | 26 036 |
| | 79.8 | 127' 10" | 38.96 | 25 | 7.62 | 221,300 | 100 380 | 172,200 | 78 108 | | | | |
| | 77.4 | 126' 10" | 38.66 | 30 | 9.14 | 187,700 | 85 139 | 172,200 | 78 108 | | | | |
| | 74.9 | 125' 7" | 38.28 | 35 | 10.67 | 162,500 | 73 708 | 163,100 | 73 980 | | | | |
| | 72.4 | 124' 2" | 37.83 | 40 | 12.19 | 142,900 | 64 818 | 143,500 | 65 090 | | | | |
| | 67.4 | 120' 6" | 36.72 | 50 | 15.24 | 114,400 | 51 890 | 115,000 | 52 163 | 114,800 | 52 072 | | |
| | 62.1 | 115' 9" | 35.28 | 60 | 18.29 | 94,800 | 43 000 | 95,300 | 43 227 | 95,800 | 43 454 | | |
| | 56.5 | 109' 10" | 33.47 | 70 | 21.34 | 80,500 | 36 514 | 80,900 | 36 695 | 81,400 | 36 922 | | |
| | 50.6 | 102' 5" | 31.22 | 80 | 24.38 | 69,600 | 31 570 | 70,000 | 31 751 | 70,500 | 31 978 | | |
| | 44.1 | 93' 2" | 28.41 | 90 | 27.43 | 61,200 | 27 759 | 61,600 | 27 941 | 62,000 | 28 122 | 57,400 | 26 036 |
| | 36.7 | 81' 5" | 24.82 | 100 | 30.48 | 54,500 | 24 720 | 54,900 | 24 902 | 55,200 | 25 038 | 55,600 | 25 219 |
| | 27.7 | 65' 7" | 19.99 | 110 | 33.53 | 49,200 | 22 316 | 49,500 | 22 452 | 49,700 | 22 543 | 50,000 | 22 679 |
| | 14.4 | 39' 8" | 12.09 | 120 | 36.58 | 39,500 | 17 916 | 39,800 | 18 052 | 40,400 | 18 325 | 42,000 | 19 050 |
| 130' (39.62 m) | 85.5 | 139' 4" | 42.47 | 14 | 4.27 | | | | | 114,700 | 52 027 | | |
| | 85.1 | 139' 3" | 42.44 | 15 | 4.57 | | | | | | | | |
| | 82 8 | 138' 9" | 42.28 | 20 | 6.10 | | | | | | | 57,300 | 25 990 |
| | 80.6 | 138' 0" | 42.06 | 25 | 7.62 | | | | | | | | |
| | 78.4 | 137' 1" | 41.77 | 30 | 9.14 | 185,600 | 84 186 | 172,100 | 78 063 | | | | |
| | 76.1 | 135' 11" | 41.43 | 35 | 10.67 | 160,500 | 72 801 | 161,100 | 73 073 | | | | |
| | 73.8 | 134' 7" | 41.02 | 40 | 12.19 | 141,100 | 64 001 | 141,700 | 64 274 | 114,700 | 52 027 | | |
| | 69.2 | 131' 3" | 40.00 | 50 | 15.24 | 112,700 | 51 119 | 113,300 | 51 392 | 113,900 | 51 664 | | |
| | 64.4 | 126' 11" | 38.69 | 60 | 18.29 | 93,100 | 42 229 | 93,700 | 42 501 | 94,300 | 42 773 | | |
| | 59.4 | 121' 7" | 37.06 | 70 | 21.34 | 78,900 | 35 788 | 79,400 | 38 015 | 79,900 | 36 242 | | |
| | 54.1 | 115' 1" | 35.07 | 80 | 24.38 | 68,000 | 30 844 | 68,500 | 31 071 | 69,000 | 31 297 | | |
| | 48.5 | 107' 0" | 32.62 | 90 | 27 43 | 59,600 | 27 034 | 60,000 | 27 215 | 60,500 | 27 442 | 57,300 | 25 990 |
| | 42.3 | 97' 2" | 29.61 | 100 | 30.48 | 52,900 | 23 995 | 53,300 | 24 176 | 53,700 | 24 357 | 54,100 | 24 539 |
| | 35.2 | 84' 8" | 25.81 | 110 | 33.53 | 47,500 | 21 545 | 47,800 | 21 681 | 48,200 | 21 863 | 48,600 | 22 044 |
| | 26 6 | 68' 0" | 20.73 | 120 | 36.58 | 42,800 | 19 413 | 43,100 | 19 549 | 43,400 | 19 685 | 43,700 | 19 821 |
| | 13.9 | 40' 11" | 12.46 | 130 | 39.62 | 34,400 | 15 603 | 34,700 | 15 739 | 35,300 | 16 011 | 36,600 | 16 601 |
| 140' (42.67 m) | 85.4 | 149' 3" | 45.50 | 15 | 4.57 | | | | | 114,600 | 51 981 | | |
| | 83.4 | 148' 9" | 45.35 | 20 | 6.10 | | | | | | | 57,300 | 25 990 |
| | 81.3 | 148' 1" | 45.14 | 25 | 7.62 | | | | | | | | |
| | 79.2 | 147' 3" | 44.88 | 30 | 9.14 | 183,400 | 83 188 | 172,000 | 78 017 | | | | |
| | 77.1 | 146' 2" | 44.56 | 35 | 10.67 | 158,500 | 71 894 | 159,200 | 72 211 | | | | |
| | 75.0 | 145' 0" | 44.18 | 40 | 12 19 | 139,200 | 63 140 | 139,800 | 63 412 | 114,600 | 51 981 | | |
| | 70.7 | 141' 11" | 43.24 | 50 | 15.24 | 111,000 | 50 348 | 111,600 | 50 620 | 112,300 | 50 938 | | |
| | 66 3 | 137' 11" | 42 05 | 60 | 18.29 | 91,500 | 41 503 | 92,100 | 41 775 | 92,700 | 42 048 | | |
| | 61.8 | 133' 1" | 40.56 | 70 | 21 34 | 77,300 | 35 062 | 77,900 | 35 334 | 78,500 | 35 607 | | |
| | 57.0 | 127' 2" | 38.76 | 80 | 24.38 | 66,500 | 30 163 | 67,000 | 30 390 | 67,600 | 30 662 | | |
| | 52.0 | 120' 0" | 36.59 | 90 | 27.43 | 58,000 | 26 308 | 58,500 | 26 535 | 59,100 | 26 807 | 57,300 | 25 990 |
| | 46.6 | 111' 5" | 33.96 | 100 | 30.48 | 51,300 | 23 269 | 51,800 | 23 496 | 52,300 | 23 722 | 52,700 | 23 904 |
| | 40.7 | 100' 11" | 30.77 | 110 | 33.53 | 45,800 | 20 774 | 46,300 | 21 001 | 46,700 | 21 182 | 47,200 | 21 409 |
| | 33.9 | 87' 10" | 26.76 | 120 | 36.58 | 41,400 | 18 778 | 41,800 | 18 960 | 42,200 | 19 141 | 42,500 | 19 277 |
| | 25.6 | 70' 4" | 21.43 | 130 | 39.62 | 37,300 | 16 918 | 37,600 | 17 055 | 37,900 | 17 191 | 38,100 | 17 281 |
| | 13.4 | 42' 1" | 12.83 | 140 | 42.67 | 29,900 | 13 562 | 30,200 | 13 698 | 30,700 | 13 925 | 31,800 | 14 424 |
| 150' (45.72 m) | 85.7 | 159' 4" | 48.56 | 15 | 4.57 | | | | | 114,500 | 51 936 | | |
| | 83.8 | 158' 10" | 48.42 | 20 | 6.10 | | | | | | | 57,200 | 25 945 |
| | 81 9 | 158' 3" | 48.22 | 25 | 7 62 | | | | | | | | |
| | 79 9 | 157' 5" | 47.98 | 30 | 9 14 | 181,200 | 82 190 | 171,800 | 77 927 | | | | |
| | 78.0 | 156' 5" | 47.68 | 35 | 10 67 | 156,500 | 70 987 | 157,200 | 71 304 | | | | |
| | 76.0 | 155' 3" | 47.33 | 40 | 12.19 | 137,300 | 62 278 | 138,000 | 62 595 | 114,500 | 51 936 | | |
| | 72.1 | 152' 5" | 46.46 | 50 | 15 24 | 109,300 | 49 577 | 110,000 | 49 895 | 110,600 | 50 167 | | |
| | 68.0 | 148' 10" | 45.35 | 60 | 18 29 | 89,900 | 40 777 | 90,600 | 41 095 | 91,200 | 41 367 | | |
| | 63.8 | 144' 4" | 43.99 | 70 | 21.34 | 75,700 | 34 336 | 76,400 | 34 654 | 77,000 | 34 926 | | |
| | 59.5 | 138' 11" | 42.34 | 80 | 24 38 | 65,000 | 29 483 | 65,600 | 29 755 | 66,200 | 30 027 | | |
| | 54.9 | 132' 6" | 40.38 | 90 | 27 43 | 56,500 | 25 627 | 57,100 | 25 900 | 57,700 | 26 172 | 57,200 | 25 945 |
| | 50.1 | 124' 10" | 38 04 | 100 | 30.48 | 49,800 | 22 588 | 50,300 | 22 815 | 50,900 | 23 087 | 51,400 | 23 314 |
| | 44.9 | 115' 8" | 35.25 | 110 | 33 53 | 44,300 | 20 094 | 44,800 | 20 320 | 45,300 | 20 547 | 45,800 | 20 774 |
| | 39 2 | 104' 7" | 31 87 | 120 | 36 58 | 39,800 | 18 052 | 40,300 | 18 279 | 40,700 | 18 461 | 41,200 | 18 688 |
| | 32.7 | 90' 9" | 27.67 | 130 | 39.62 | 35,900 | 16 283 | 36,300 | 16 465 | 36,700 | 16 646 | 37,100 | 16 828 |
| | 24 8 | 72' 7" | 22.11 | 140 | 42 67 | 32,300 | 14 651 | 32,600 | 14 787 | 32,900 | 14 923 | 33,200 | 15 059 |
| | 12.9 | 43' 3" | 13.18 | 150 | 45.72 | 25,900 | 11 748 | 26,200 | 11 884 | 26,600 | 12 065 | 27,500 | 12 473 |

(continued)

①Load handled off main boom head sheaves with 10' (3.05 m) boom tip extension mounted on boom.
②Measured vertically from center of boom head sheave to base of turntable bearing mounting
③Measured from center of tower base section to center of gravity of freely suspended load.

# TG-1900 lifting crane capacities — with climbing frame

Refer to **Notes** page 15.

| Boom | | | | Load radius③ | | Capacities — Main boom only① | | | | | | | |
|---|---|---|---|---|---|---|---|---|---|---|---|---|---|
| | Angle | Boom point height② | | | | 4-part hoist line | | 3-part hoist line | | 2-part hoist line | | 1-part hoist line | |
| Length | Degree | Feet | meters | Feet | meters | Pounds | kilograms | Pounds | kilograms | Pounds | kilograms | Pounds | kilograms |
| 160' (48.77 m) | 84.2 | 168' 11" | 51.48 | 20 | 6.10 | | | | | 114,400 | 51 890 | | |
| | 82.4 | 168' 4" | 51.30 | 25 | 7.62 | | | | | | | 57,200 | 25 945 |
| | 80.6 | 167' 7" | 51.07 | 30 | 9.14 | | | | | | | | |
| | 78.8 | 166' 8" | 50.79 | 35 | 10.67 | 154,500 | 70 080 | 155,200 | 70 397 | | | | |
| | 76.9 | 165' 7" | 50.47 | 40 | 12.19 | 135,400 | 61 416 | 136,100 | 61 733 | 114,400 | 51 890 | | |
| | 73.2 | 162' 11" | 49.65 | 50 | 15.24 | 107,600 | 48 806 | 108,300 | 49 124 | 109,000 | 49 441 | | |
| | 69.4 | 159' 6" | 48.62 | 60 | 18.29 | 88,300 | 40 052 | 89,000 | 40 369 | 89,700 | 40 687 | | |
| | 65.6 | 155' 5" | 47.36 | 70 | 21.34 | 74,200 | 33 656 | 74,900 | 33 974 | 75,600 | 34 291 | | |
| | 61.6 | 150' 5" | 45.84 | 80 | 24.38 | 63,500 | 28 803 | 64,100 | 29 075 | 64,800 | 29 392 | 57,200 | 25 945 |
| | 57.4 | 144' 6" | 44.05 | 90 | 27.43 | 55,000 | 24 947 | 55,700 | 25 265 | 56,300 | 25 537 | 57,000 | 25 854 |
| | 53.0 | 137' 7" | 41.93 | 100 | 30.48 | 48,300 | 21 908 | 48,900 | 22 180 | 49,500 | 22 452 | 50,200 | 22 770 |
| | 48.4 | 129' 5" | 39.44 | 110 | 33.53 | 42,800 | 19 413 | 43,400 | 19 685 | 44,000 | 19 958 | 44,600 | 20 230 |
| | 43.4 | 119' 8" | 36.49 | 120 | 36.58 | 38,300 | 17 372 | 38,800 | 17 599 | 39,400 | 17 871 | 39,900 | 18 098 |
| | 37.9 | 108' 1" | 32.94 | 130 | 39.62 | 34,600 | 15 694 | 35,100 | 15 921 | 35,500 | 16 102 | 36,000 | 16 329 |
| | 31.6 | 93' 8" | 28.55 | 140 | 42.67 | 30,900 | 14 016 | 31,400 | 14 242 | 31,800 | 14 424 | 32,200 | 14 605 |
| | 24.0 | 74' 9" | 22.77 | 150 | 45.72 | •27,900 | 12 655 | 28,200 | 12 791 | 28,500 | 12 927 | 28,900 | 13 108 |
| | 12.5 | 44' 4" | 13.52 | 160 | 48.77 | 22,300 | 10 115 | 22,600 | 10 251 | 22,900 | 10 387 | 23,700 | 10 750 |
| 170'© (51.82 m) | 84.5 | 178' 11" | 54.54 | 20 | 6.10 | | | | | 114,300 | 51 845 | | |
| | 82.8 | 178' 5" | 54.37 | 25 | 7.62 | | | | | | | 57,100 | 25 900 |
| | 81.1 | 177' 8" | 54.16 | 30 | 9.14 | | | | | | | | |
| | 79.4 | 176' 10" | 53.90 | 35 | 10.67 | 152,400 | 69 127 | 153,300 | 69 535 | | | | |
| | 77.7 | 175' 10" | 53.59 | 40 | 12.19 | 133,500 | 60 554 | 134,300 | 60 917 | 114,300 | 51 845 | | |
| | 74.2 | 173' 4" | 52.83 | 50 | 15.24 | 105,800 | 47 990 | 106,600 | 48 352 | 107,400 | 48 715 | | |
| | 70.7 | 170' 2" | 51.87 | 60 | 16.29 | 86,700 | 39 326 | 87,500 | 39 689 | 88,200 | 40 006 | | |
| | 67.1 | 166' 4" | 50.69 | 70 | 21.34 | 72,700 | 32 976 | 73,400 | 33 293 | 74,200 | 33 656 | | |
| | 63.4 | 161' 8" | 49.28 | 80 | 24.38 | 62,000 | 28 122 | 62,700 | 28 440 | 63,400 | 28 757 | 57,100 | 25 900 |
| | 59.5 | 156' 3" | 47.62 | 90 | 27.43 | 53,600 | 24 312 | 54,300 | 24 630 | 55,000 | 24 947 | 55,700 | 25 265 |
| | 55.5 | 149' 11" | 45.68 | 100 | 30.48 | 46,900 | 21 273 | 47,600 | 21 591 | 48,200 | 21 863 | 48,900 | 22 180 |
| | 51.3 | 142' 6" | 43.42 | 110 | 33.53 | 41,400 | 18 778 | 42,000 | 19 050 | 42,700 | 19 368 | 43,300 | 19 640 |
| | 46.9 | 133' 10" | 40.78 | 120 | 36.58 | 36,900 | 16 737 | 37,500 | 17 009 | 38,100 | 17 281 | 38,700 | 17 554 |
| | 42.1 | 123' 7" | 37.68 | 130 | 39.62 | 33,100 | 15 013 | 33,700 | 15 286 | 34,200 | 15 512 | 34,800 | 15 785 |
| | 36.8 | 111' 5" | 33.97 | 140 | 42.67 | 29,700 | 13 471 | 30,200 | 13 698 | 30,700 | 13 925 | 31,200 | 14 152 |
| | 30.7 | 96' 6" | 29.40 | 150 | 45.72 | 26,600 | 12 065 | 27,000 | 12 246 | 27,400 | 12 428 | 27,800 | 12 609 |
| | 23.2 | 76' 10" | 23.41 | 160 | 48.77 | 24,000 | 10 886 | 24,300 | 11 022 | 24,600 | 11 158 | 25,000 | 11 339 |
| | 12.1 | 45' 5" | 13.85 | 170 | 51.82 | 19,000 | 8 618 | 19,200 | 8 708 | 19,600 | 8 890 | 20,200 | 9 162 |
| 180'© (54.86 m) | 84.8 | 189' 0" | 57.60 | 20 | 6.10 | | | | | 114,200 | 51 800 | | |
| | 83.2 | 188' 6" | 57.45 | 25 | 7.62 | | | | | | | 57,100 | 25 900 |
| | 81.6 | 187' 10" | 57.24 | 30 | 9.14 | | | | | | | | |
| | 80.0 | 187' 0" | 57.00 | 35 | 10.67 | 150,400 | 68 220 | 151,200 | 68 583 | | | | |
| | 78.4 | 186' 1" | 56.71 | 40 | 12.19 | 131,600 | 59 692 | 132,400 | 60 055 | 114,200 | 51 800 | | |
| | 75.1 | 183' 8" | 55.99 | 50 | 15.24 | 104,100 | 47 218 | 104,900 | 47 581 | 105,800 | 47 990 | | |
| | 71.8 | 180' 9" | 55.08 | 60 | 18.29 | 85,100 | 38 600 | 85,900 | 38 963 | 86,700 | 39 326 | | |
| | 68.4 | 177' 1" | 53.98 | 70 | 21.34 | 71,100 | 32 250 | 71,900 | 32 613 | 72,700 | 32 976 | | |
| | 65.0 | 172' 10" | 52.67 | 80 | 24.38 | 60,500 | 27 442 | 61,300 | 27 805 | 62,100 | 28 168 | 57,100 | 25 900 |
| | 61.4 | 167' 9" | 51.13 | 90 | 27.43 | 52,200 | 23 677 | 52,900 | 23 995 | 53,700 | 24 357 | 54,400 | 24 675 |
| | 57.7 | 161' 10" | 49.33 | 100 | 30.48 | 45,500 | 20 638 | 46,200 | 20 955 | 46,900 | 21 273 | 47,700 | 21 636 |
| | 53.8 | 155' 1" | 47.26 | 110 | 33.53 | 40,000 | 18 143 | 40,700 | 18 461 | 41,400 | 18 778 | 42,100 | 19 096 |
| | 49.8 | 147' 2" | 44.86 | 120 | 36.58 | 35,500 | 16 102 | 36,100 | 16 374 | 36,800 | 16 692 | 37,400 | 16 964 |
| | 45.5 | 138' 1" | 42.08 | 130 | 39.62 | 31,700 | 14 378 | 32,300 | 14 651 | 32,900 | 14 923 | 33,500 | 15 195 |
| | 40.8 | 127' 5" | 38.83 | 140 | 42.67 | 28,500 | 12 927 | 29,100 | 13 199 | 29,600 | 13 426 | 30,200 | 13 698 |
| | 35.7 | 114' 9" | 34.96 | 150 | 45.72 | 25,300 | 11 475 | 25,800 | 11 702 | 26,300 | 11 929 | 26,900 | 12 201 |
| | 29.8 | 99' 2" | 30.22 | 160 | 48.77 | 22,600 | 10 251 | 23,100 | 10 477 | 23,500 | 10 659 | 23,900 | 10 840 |
| | 22.6 | 78' 10" | 24.03 | 170 | 51.82 | 20,400 | 9 253 | 20,700 | 9 389 | 21,100 | 9 570 | 21,400 | 9 706 |
| | 11.8 | 46' 6" | 14.17 | 180 | 54.86 | 16,000 | 7 257 | 16,200 | 7 348 | 16,500 | 7 484 | 17,100 | 7 756 |

(continued)

©Consult manufacturer for boom lengths greater than 170' (51.82 m).
①Load handled off main boom head sheaves with 10' (3.05 m) boom tip extension mounted on boom.
②Measured vertically from center of boom head sheave to base of turntable bearing mounting.
③Measured from center of tower base section to center of gravity of freely suspended load.

# TG-1900 lifting crane capacities — with climbing frame

Refer to Notes page 15.

| Boom | | | | Load radius ③ | | Capacities — Main boom only ① | | | | | | | |
|---|---|---|---|---|---|---|---|---|---|---|---|---|---|
| | Angle | Boom point height ② | | | | 4-part hoist line | | 3-part hoist line | | 2-part hoist line | | 1-part hoist line | |
| Length | Degree | Feet | meters | Feet | meters | Pounds | kilograms | Pounds | kilograms | Pounds | kilograms | Pounds | kilograms |
| | 85.1 | 199' 0" | 60.66 | 20 | 6.10 | | | | | 114,100 | 51 754 | | |
| | 83.6 | 198' 6" | 60.51 | 25 | 7.62 | | | | | ↑ | ↑ | 57,000 | 25 854 |
| | 82.1 | 197' 11" | 60.32 | 30 | 9.14 | | | | | | | ↑ | ↑ |
| | 80.5 | 197' 2" | 60.09 | 35 | 10.67 | 139,400 | 63 230 | 140,300 | 63 639 | ↓ | ↓ | | |
| | 79.0 | 196' 3" | 59.81 | 40 | 12.19 | 129,600 | 58 785 | 130,500 | 59 193 | 114,100 | 51 754 | | |
| | 75.9 | 194' 0" | 59.14 | 50 | 15.24 | 102,400 | 46 447 | 103,300 | 46 856 | 104,100 | 47 218 | | |
| | 72.8 | 191' 3" | 58.28 | 60 | 18.29 | 83,500 | 37 874 | 84,300 | 38 237 | 85,200 | 38 646 | | |
| | 69.6 | 187' 10" | 57.25 | 70 | 21.34 | 69,600 | 31 570 | 70,500 | 31 978 | 71,300 | 32 341 | | |
| | 66.4 | 183' 9" | 56.01 | 80 | 24.38 | 59,100 | 26 807 | 59,900 | 27 170 | 60,700 | 27 533 | 57,000 | 25 854 |
| 190'© | 63.0 | 179' 0" | 54.57 | 90 | 27.43 | 50,800 | 23 042 | 51,600 | 23 405 | 52,400 | 23 768 | 53,200 | 24 131 |
| (57.91 m) | 59.6 | 173' 7" | 52.90 | 100 | 30.48 | 44,100 | 20 003 | 44,900 | 20 366 | 45,700 | 20 729 | 46,400 | 21 046 |
| | 56.0 | 167' 3" | 50.98 | 110 | 33.53 | 38,600 | 17 508 | 39,400 | 17,871 | 40 100 | 18 189 | 40,900 | 18 551 |
| | 52.3 | 160' 0" | 48.78 | 120 | 36.58 | 34,100 | 15 467 | 34,800 | 15 785 | 35,500 | 16 102 | 36,300 | 16 465 |
| | 48.4 | 151' 9" | 46.25 | 130 | 39.62 | 30,300 | 13 743 | 31,000 | 14 061 | 31,700 | 14 378 | 32,400 | 14 696 |
| | 44.2 | 142' 2" | 43.34 | 140 | 42.67 | 27,100 | 12 292 | 27,800 | 12 609 | 28,400 | 12 882 | 29,000 | 13 154 |
| | 39.7 | 131' 1" | 39.95 | 150 | 45.72 | 24,200 | 10 976 | 24,800 | 11 249 | 25,400 | 11 521 | 25,900 | 11 748 |
| | 34.7 | 117' 11" | 35.93 | 160 | 48.77 | 21,400 | 9 706 | 21,900 | 9 933 | 22,500 | 10 205 | 23,000 | 10 432 |
| | 29.0 | 101' 9" | 31.02 | 170 | 51.82 | 19,100 | 8 663 | 19,500 | 8 845 | 20,000 | 9 071 | 20,400 | 9 253 |
| | 22.0 | 80' 9" | 24.63 | 180 | 54.86 | 17,200 | 7 801 | 17,500 | 7 937 | 17,900 | 8 119 | 18,200 | 8 255 |
| | 11.5 | 47' 6" | 14.48 | 190 | 57.91 | 13,200 | 5 987 | 13,400 | 6 078 | 13,700 | 6 214 | 14,200 | 6 441 |
| | 85.4 | 209' 1" | 63.72 | 20 | 6.10 | | | | | 114,000 | 51 709 | | |
| | 83.9 | 208' 7" | 63.58 | 25 | 7.62 | | | | | ↑ | ↑ | 57,000 | 25 854 |
| | 82.5 | 208' 0" | 63.40 | 30 | 9.14 | | | | | | | ↑ | ↑ |
| | 81.0 | 207' 3" | 63.18 | 35 | 10.67 | | | | | ↓ | ↓ | | |
| | 79.6 | 206' 5" | 62.92 | 40 | 12.19 | 125,300 | 56 835 | 126,300 | 57 288 | 114,000 | 51,709 | | |
| | 76.6 | 204' 4" | 62.27 | 50 | 15.24 | 100,600 | 45 631 | 101,600 | 46 084 | 102,500 | 46 493 | | |
| | 73.7 | 201' 8" | 61.47 | 60 | 18.29 | 81,900 | 37 149 | 82,800 | 37 557 | 83,700 | 37 965 | | |
| | 70.7 | 198' 5" | 60.49 | 70 | 21.34 | 68,100 | 30 889 | 69,000 | 31 297 | 69,900 | 31 706 | | |
| | 67.6 | 194' 8" | 59.32 | 80 | 24.38 | 57,600 | 26 126 | 58,500 | 26 535 | 59,400 | 26 943 | 57,000 | 25 854 |
| 200'© | 64.5 | 190' 2" | 57.97 | 90 | 27.43 | 49,300 | 22 362 | 50,200 | 22 770 | 51,100 | 23 178 | 51,900 | 23 541 |
| (60.96 m) | 61.2 | 185' 1" | 56.41 | 100 | 30.48 | 42,700 | 19 368 | 43,500 | 19 731 | 44,400 | 20 139 | 45,200 | 20 502 |
| | 57.9 | 179' 2" | 54.62 | 110 | 33.53 | 37,300 | 16 918 | 38,100 | 17 281 | 38,900 | 17 644 | 39,700 | 18 007 |
| | 54.5 | 172' 6" | 52.58 | 120 | 36.58 | 32,700 | 14 832 | 33,500 | 15 195 | 34,300 | 15 558 | 35,100 | 15 921 |
| | 50.9 | 164' 10" | 50.25 | 130 | 39.62 | 29,000 | 13 154 | 29,700 | 13 471 | 30,400 | 13 789 | 31,200 | 14 152 |
| | 47.1 | 156' 2" | 47.60 | 140 | 42.67 | 25,800 | 11 702 | 26,500 | 12 020 | 27,200 | 12 337 | 27,900 | 12 655 |
| | 43.0 | 146' 2" | 44.56 | 150 | 45.72 | 23,000 | 10 432 | 23,700 | 10 750 | 24,300 | 11 022 | 25,000 | 11 339 |
| | 38.6 | 134' 7" | 41.03 | 160 | 48.77 | 20,300 | 9 207 | 20,900 | 9 480 | 21,500 | 9 752 | 22,100 | 10 024 |
| | 33.8 | 121' 0" | 36.87 | 170 | 51.82 | 17,900 | 8 119 | 18,400 | 8 346 | 18,900 | 8 572 | 19,500 | 8 845 |
| | 28.2 | 104' 4" | 31.80 | 180 | 54.86 | 15,800 | 7 166 | 16,300 | 7 393 | 16,700 | 7 574 | 17,200 | 7 801 |
| | 21.4 | 82' 8" | 25.21 | 190 | 57.91 | 14,200 | 6 441 | 14,500 | 6 577 | 14,900 | 6 758 | 15,200 | 6 894 |
| | 11.2 | 48' 6" | 14.78 | 200 | 60.96 | 10,600 | 4 808 | 11,200 | 5 080 | 11,100 | 5 034 | 11,500 | 5 216 |

©Consult manufacturer for boom lengths greater than 170' (51.82 m).
①Load handled off main boom head sheaves with 10' (3.05 m) boom tip extension mounted on boom.
②Measured vertically from center of boom head sheave to base of turntable bearing mounting.
③Measured from center of tower base section to center of gravity of freely suspended load.

# TG-1900 lifting crane capacities — pedestal, bogie or gantry mounted

Refer to **Notes** page 15.

**Mounting** — pedestal, bogie, or gantry.

**Mast** — 43′ 0⅛″ (13.11 m) over-all height.

**Boom** — tubular; 75″ x 75″ (1.91 x 1.91 m) with 40′ (12.19 m) base section, 40′ (12.19 m) top section, 1¾″ (44 mm) diameter boom pendants, with or without boom tip extension.

**Boom tip extension** — tubular; 14,800# (6 713 kg) rating; 10′ (3.05 m) long.

**Counterweights** — Total 94,400# (42 820 kg). Includes one fixed counterweight — 23,600# (10 705 kg) plus one moving counterweight — 70,800# (32 115 kg) consisting of three sections weighing 23,600# (10 705 kg) each.

| Boom | | | | Load radius③ | | Capacities — Main boom only① | | | | | | | |
|---|---|---|---|---|---|---|---|---|---|---|---|---|---|
| | Angle | Boom point height② | | | | 4-part hoist line | | 3-part hoist line | | 2-part hoist line | | 1-part hoist line | |
| Length | Degree | Feet | meters | Feet | meters | Pounds | kilograms | Pounds | kilograms | Pounds | kilograms | Pounds | kilograms |
| 80′ (24.38 m) | 85.5 | 89′ 6″ | 27.27 | 10 | 3.05 | | | | | 115,200 | 52 253 | | |
| | 84.8 | 89′ 5″ | 27.25 | 11 | 3.35 | | | | | | | | |
| | 84.1 | 89′ 4″ | 27.22 | 12 | 3.66 | | | | | | | | |
| | 83.4 | 89′ 2″ | 27.19 | 13 | 3.96 | | | | | | | | |
| | 82.7 | 89′ 1″ | 27.15 | 14 | 4.27 | | | | | | | 57,600 | 26 126 |
| | 81.9 | 88′ 11″ | 27.11 | 15 | 4.57 | | | | | | | | |
| | 78.3 | 88′ 1″ | 26.84 | 20 | 6.10 | 230,400 | 104 507 | 172,800 | 78 380 | | | | |
| | 74.6 | 86′ 10″ | 26.48 | 25 | 7.62 | 230,400 | 104 507 | | | | | | |
| | 70.9 | 85′ 4″ | 26.00 | 30 | 9.14 | 217,600 | 98 701 | | | | | | |
| | 67.0 | 83′ 5″ | 25.42 | 35 | 10.67 | 186,400 | 84 549 | 172,800 | 78 380 | | | | |
| | 63.1 | 81′ 1″ | 24.71 | 40 | 12.19 | 162,600 | 73 754 | 163,000 | 73 935 | | | | |
| | 54.7 | 75′ 0″ | 22.87 | 50 | 15.24 | 128,900 | 58 468 | 129,200 | 58 604 | 115,200 | 52 253 | | |
| | 45.4 | 66′ 8″ | 20.31 | 60 | 18.29 | 106,300 | 48 216 | 106,600 | 48 352 | 106,800 | 48 443 | | |
| | 34.1 | 54′ 8″ | 16.65 | 70 | 21.34 | 90,200 | 40 914 | 90,400 | 41 004 | 90,700 | 41 140 | | |
| | 17.7 | 34′ 1″ | 10.38 | 80 | 24.38 | 69,000 | 31 297 | 69,700 | 31 615 | 71,100 | 32 250 | 57,600 | 26 126 |
| 90′ (27.43 m) | 85.4 | 99′ 5″ | 30.31 | 11 | 3.35 | | | | | 115,100 | 52 208 | | |
| | 84.8 | 99′ 4″ | 30.28 | 12 | 3.66 | | | | | | | | |
| | 84.1 | 99′ 3″ | 30.25 | 13 | 3.96 | | | | | | | | |
| | 83.5 | 99′ 2″ | 30.22 | 14 | 4.27 | | | | | | | 57,500 | 26 081 |
| | 82.8 | 99′ 0″ | 30.18 | 15 | 4.57 | | | | | | | | |
| | 79.6 | 98′ 3″ | 29.95 | 20 | 6.10 | 230,300 | 104 462 | 172,700 | 78 335 | | | | |
| | 76.4 | 97′ 2″ | 29.62 | 25 | 7.62 | 230,300 | 104 462 | | | | | | |
| | 73 1 | 95′ 10″ | 29.21 | 30 | 9.14 | 216,400 | 98 157 | | | | | | |
| | 69.7 | 94′ 2″ | 28.69 | 35 | 10.67 | 185,100 | 83 959 | 172,700 | 78 335 | | | | |
| | 66.3 | 92′ 1″ | 28.08 | 40 | 12.19 | 161,300 | 73 164 | 161,700 | 73 345 | | | | |
| | 59.1 | 86′ 11″ | 26.50 | 50 | 15.24 | 127,500 | 57 833 | 127,900 | 58 014 | 115,100 | 52 208 | | |
| | 51.4 | 80′ 0″ | 24.39 | 60 | 18.29 | 104,800 | 47 536 | 105,100 | 47 672 | 105,500 | 47 854 | | |
| | 42.6 | 70′ 8″ | 21.55 | 70 | 21.34 | 88,600 | 40 188 | 88,900 | 40 324 | 89,100 | 40 415 | | |
| | 32.1 | 57′ 7″ | 17.56 | 80 | 24.38 | 76,500 | 34 699 | 76,700 | 34 790 | 77,000 | 34 926 | | |
| | 16.7 | 35′ 7″ | 10.84 | 90 | 27.43 | 59,700 | 27 079 | 60,300 | 27 351 | 61,400 | 27 850 | 57,500 | 26 081 |
| 100′ (30.48 m) | 85.3 | 109′ 5″ | 33.34 | 12 | 3 66 | | | | | 115,000 | 52 163 | | |
| | 84.7 | 109′ 4″ | 33.31 | 13 | 3.96 | | | | | | | | |
| | 84.1 | 109′ 2″ | 33.28 | 14 | 4.27 | | | | | | | | |
| | 83.6 | 109′ 1″ | 33.25 | 15 | 4.57 | | | | | | | 57,500 | 26 081 |
| | 80.7 | 108′ 5″ | 33.04 | 20 | 6 10 | | | | | | | | |
| | 77.8 | 107′ 5″ | 32.75 | 25 | 7.62 | 230,100 | 104 371 | 172,500 | 78 244 | | | | |
| | 74.8 | 106′ 3″ | 32.38 | 30 | 9.14 | 215,100 | 97 567 | 172,500 | 78 244 | | | | |
| | 71.8 | 104′ 9″ | 31.92 | 35 | 10.67 | 183,900 | 83 415 | 172,500 | 78 244 | | | | |
| | 68.8 | 102′ 11″ | 31.38 | 40 | 12.19 | 160,100 | 72 620 | 160,500 | 72 801 | | | | |
| | 62.5 | 98′ 5″ | 29.99 | 50 | 15.24 | 126,300 | 57 288 | 126,700 | 57 470 | 115,000 | 52 163 | | |
| | 55.8 | 92′ 5″ | 28.17 | 60 | 18.29 | 103,500 | 46 946 | 103,900 | 47 128 | 104,300 | 47 309 | | |
| | 48.5 | 84′ 8″ | 25.81 | 70 | 21.34 | 87,100 | 39 507 | 87,500 | 39 689 | 87,900 | 39 870 | | |
| | 40.4 | 74′ 6″ | 22.70 | 80 | 24.38 | 74,900 | 33 974 | 75,200 | 34 110 | 75,600 | 34 291 | | |
| | 30.4 | 60′ 5″ | 18.41 | 90 | 27.43 | 65,600 | 29 755 | 65,800 | 29 846 | 66,100 | 29 982 | 57,500 | 26 081 |
| | 15.8 | 37′ 0″ | 11.28 | 100 | 30.48 | 51,900 | 23 541 | 52,400 | 23 768 | 53,300 | 24 176 | 55,800 | 25 310 |
| 110′ (33.53 m) | 85.2 | 119′ 4″ | 36.37 | 13 | 3 96 | | | | | 114,900 | 52 117 | | |
| | 84.7 | 119′ 3″ | 36.35 | 14 | 4.27 | | | | | | | | |
| | 84.2 | 119′ 2″ | 36.32 | 15 | 4.57 | | | | | | | | |
| | 81.5 | 118′ 6″ | 36.13 | 20 | 6.10 | | | | | | | 57,400 | 26 036 |
| | 78.9 | 117′ 8″ | 35.86 | 25 | 7.62 | 229,900 | 104 280 | 172,400 | 78 199 | | | | |
| | 76 2 | 116′ 7″ | 35.53 | 30 | 9 14 | 214,000 | 97 068 | 172,400 | 78 199 | | | | |
| | 73.5 | 115′ 2″ | 35.11 | 35 | 10.67 | 182,700 | 82 871 | 172,400 | 78 199 | | | | |
| | 70 8 | 113′ 7″ | 34.62 | 40 | 12 19 | 158,900 | 72 075 | 159,400 | 72 302 | | | | |
| | 65 2 | 109′ 7″ | 33.39 | 50 | 15 24 | 125,100 | 56 744 | 125,600 | 56 971 | 114,900 | 52 117 | | |
| | 59.3 | 104′ 3″ | 31.78 | 60 | 18 29 | 102,300 | 46 402 | 102,700 | 46 583 | 103,200 | 46 810 | | |
| | 53 0 | 97′ 7″ | 29.74 | 70 | 21.34 | 85,900 | 38 963 | 86,300 | 39 145 | 86,700 | 39 326 | | |
| | 46.1 | 89′ 1″ | 27.14 | 80 | 24.38 | 73,600 | 33 384 | 74,000 | 33 565 | 74,300 | 33 701 | | |
| | 38 4 | 78′ 1″ | 23.79 | 90 | 27.43 | 64,100 | 29 075 | 64,400 | 29 211 | 64,800 | 29 392 | | |
| | 29 0 | 63′ 1″ | 19.22 | 100 | 30.48 | 56,700 | 25 718 | 56,900 | 25 809 | 57,200 | 25 945 | 57,400 | 26 036 |
| | 15 1 | 38′ 4″ | 11.69 | 110 | 33.53 | 45,200 | 20 502 | 45,600 | 20 683 | 46,400 | 21 046 | 48,400 | 21 953 |

(continued)

①Load handled off main boom head sheaves with 10′ (3 05 m) boom tip extension mounted on boom.
②Measured vertically from center of boom head sheave to base of turntable bearing mounting
③Measured from centerline of rotation to center of gravity of freely suspended load

# TG-1900 lifting crane capacities — pedestal, bogie, or gantry mounted

Refer to **Notes** page 15.

| Boom | | | | Load radius③ | | Capacities — Main boom only① | | | | | | | |
|---|---|---|---|---|---|---|---|---|---|---|---|---|---|
| | Angle | Boom point height② | | | | 4-part hoist line | | 3-part hoist line | | 2-part hoist line | | 1-part hoist line | |
| Length | Degree | Feet | meters | Feet | meters | Pounds | kilograms | Pounds | kilograms | Pounds | kilograms | Pounds | kilograms |
| 120' (36 58 m) | 85 6 | 129' 4" | 39.43 | 13 | 3.96 | | | | | 114,800 | 52 072 | | |
| | 85 1 | 129' 3" | 39.41 | 14 | 4.27 | | | | | | | | |
| | 84 6 | 129' 2" | 39.38 | 15 | 4.57 | | | | | | | | |
| | 82.2 | 128' 7" | 39.20 | 20 | 6.10 | | | | | | | 57,400 | 26 036 |
| | 79 8 | 127' 10" | 38.96 | 25 | 7.62 | 229,700 | 104 190 | 172,200 | 78 108 | | | | |
| | 77.4 | 126' 10" | 38.66 | 30 | 9.14 | 212,900 | 96 569 | 172,200 | 78 108 | | | | |
| | 74.9 | 125' 7" | 38.28 | 35 | 10.67 | 181,600 | 82 372 | 172,200 | 78 108 | | | | |
| | 72.4 | 124' 2" | 37.83 | 40 | 12.19 | 157,800 | 71 576 | 158,300 | 71 803 | | | | |
| | 67.4 | 120' 6" | 36.72 | 50 | 15.24 | 123,900 | 56 200 | 124,500 | 56 472 | 114,800 | 52 072 | | |
| | 62.1 | 115' 9" | 35.28 | 60 | 18.29 | 101,100 | 45 858 | 101,600 | 46 084 | 102,100 | 46 311 | | |
| | 56.5 | 109' 10" | 33.47 | 70 | 21.34 | 84,700 | 38 419 | 85,100 | 38 600 | 85,600 | 38 827 | | |
| | 50 6 | 102' 5" | 31.22 | 80 | 24.38 | 72,300 | 32 794 | 72,800 | 33 021 | 73,200 | 33 202 | | |
| | 44.1 | 93' 2" | 28.41 | 90 | 27.43 | 62,800 | 28 485 | 63,200 | 28 667 | 63,600 | 28 848 | 57,400 | 26 036 |
| | 36.7 | 81' 5" | 24.82 | 100 | 30.48 | 55,200 | 25 038 | 55,600 | 25 219 | 55,900 | 25 355 | 56,200 | 25 491 |
| | 27.7 | 65' 7" | 19.99 | 110 | 33.53 | 49,200 | 22 316 | 49,500 | 22 452 | 49,700 | 22 543 | 50,000 | 22 679 |
| | 14.4 | 39' 8" | 12.09 | 120 | 36.58 | 39,500 | 17 916 | 39,800 | 18 052 | 40,400 | 18 325 | 42,000 | 19 050 |
| 130' (39 62 m) | 85 5 | 139' 4" | 42.47 | 14 | 4.27 | | | | | 114,700 | 52 027 | | |
| | 85.1 | 139' 3" | 42.44 | 15 | 4.57 | | | | | | | | |
| | 82.8 | 138' 9" | 42.28 | 20 | 6.10 | | | | | | | 57,300 | 25 990 |
| | 80.6 | 138' 0" | 42.06 | 25 | 7.62 | | | | | | | | |
| | 78.4 | 137' 1" | 41.77 | 30 | 9.14 | 211,900 | 96 116 | 172,100 | 78 063 | | | | |
| | 76.1 | 135' 11" | 41.43 | 35 | 10.67 | 180,600 | 81 918 | 172,100 | 78 063 | | | | |
| | 73.8 | 134' 7" | 41.02 | 40 | 12.19 | 156,700 | 71 077 | 157,300 | 71 350 | | | | |
| | 69.2 | 131' 3" | 40.00 | 50 | 15 24 | 122,900 | 55 746 | 123,400 | 55 973 | 114,700 | 52 027 | | |
| | 64.4 | 126' 11" | 38.69 | 60 | 18.29 | 100,000 | 45 359 | 100,500 | 45 586 | 101,100 | 45 858 | | |
| | 59.4 | 121' 7" | 37.06 | 70 | 21.34 | 83,500 | 37 874 | 84,100 | 38 147 | 84,600 | 38 373 | | |
| | 54.1 | 115' 1" | 35.07 | 80 | 24.38 | 71,100 | 32 250 | 71,600 | 32 477 | 72,200 | 32 749 | | |
| | 48.5 | 107' 0" | 32.62 | 90 | 27.43 | 61,500 | 27 895 | 62,000 | 28 122 | 62,500 | 28 349 | 57,300 | 25 990 |
| | 42.3 | 97' 2" | 29.61 | 100 | 30.48 | 53,900 | 24 448 | 54,300 | 24 630 | 54,800 | 24 856 | 55,200 | 25 038 |
| | 35 2 | 84' 8" | 25.81 | 110 | 33 53 | 47,800 | 21 681 | 48,100 | 21 817 | 48,500 | 21 999 | 48,900 | 22 180 |
| | 26.6 | 68' 0" | 20.73 | 120 | 36.58 | 42,800 | 19 413 | 43,100 | 19 549 | 43,400 | 19 685 | 43,700 | 19 821 |
| | 13.9 | 40' 11" | 12.46 | 130 | 39.62 | 34,400 | 15 603 | 34,700 | 15 739 | 35,300 | 16 011 | 36,600 | 16 601 |
| 140' (42.67 m) | 85.4 | 149' 3" | 45.50 | 15 | 4.57 | | | | | 114,600 | 51 981 | | |
| | 83 4 | 148' 9" | 45.35 | 20 | 6.10 | | | | | | | 57,300 | 25 990 |
| | 81.3 | 148' 1" | 45.14 | 25 | 7 62 | | | | | | | | |
| | 79.2 | 147' 3" | 44.88 | 30 | 9.14 | 210,800 | 95 617 | 172,000 | 78 017 | | | | |
| | 77.1 | 146' 2" | 44.56 | 35 | 10 67 | 179,500 | 81 419 | 172,000 | 78 017 | | | | |
| | 75.0 | 145' 0" | 44.18 | 40 | 12.19 | 155,600 | 70 578 | 156,300 | 70 896 | | | | |
| | 70.7 | 141' 11" | 43.24 | 50 | 15.24 | 121,800 | 55 247 | 122,400 | 55 519 | 114,600 | 51 981 | | |
| | 66 3 | 137' 11" | 42.05 | 60 | 18 29 | 98,900 | 44 860 | 99,500 | 45 132 | 100,100 | 45 404 | | |
| | 61.8 | 133' 1" | 40.56 | 70 | 21 34 | 82,400 | 37 376 | 83,000 | 37 648 | 83,600 | 37 920 | | |
| | 57.0 | 127' 2" | 38.76 | 80 | 24.38 | 70,000 | 31 751 | 70,600 | 32 023 | 71,100 | 32 250 | | |
| | 52 0 | 120' 0" | 36.59 | 90 | 27.43 | 60,400 | 27 396 | 60,900 | 27 623 | 61,400 | 27 850 | 57,300 | 25 990 |
| | 46.6 | 111' 5" | 33.96 | 100 | 30.48 | 52,700 | 23 904 | 53,200 | 24 131 | 53,700 | 24 357 | 54,200 | 24 584 |
| | 40.7 | 100' 11" | 30.77 | 110 | 33.53 | 46,500 | 21 092 | 46,900 | 21 273 | 47,400 | 21 500 | 47,800 | 21 681 |
| | 33 9 | 87' 10" | 26.76 | 120 | 36.58 | 41,400 | 18 778 | 41,800 | 18 960 | 42,200 | 19 141 | 42,500 | 19 277 |
| | 25.6 | 70' 4" | 21.43 | 130 | 39.62 | 37,300 | 16 918 | 37,600 | 17 055 | 37,900 | 17 191 | 38,100 | 17 281 |
| | 13.4 | 42' 1" | 12.83 | 140 | 42.67 | 29,900 | 13 562 | 30,200 | 13 698 | 30,700 | 13 925 | 31,800 | 14 424 |
| 150' (45.72 m) | 85.7 | 159' 4" | 48.56 | 15 | 4.57 | | | | | 114,500 | 51 936 | | |
| | 83 8 | 158' 10" | 48.42 | 20 | 6.10 | | | | | | | 57,200 | 25 945 |
| | 81 9 | 158' 3" | 48.22 | 25 | 7.62 | | | | | | | | |
| | 79.9 | 157' 5" | 47.98 | 30 | 9.14 | 209,700 | 95 118 | 171,800 | 77 927 | | | | |
| | 78.0 | 156' 5" | 47.68 | 35 | 10.67 | 178,400 | 80 920 | 171,800 | 77 927 | | | | |
| | 76.0 | 155' 3" | 47.33 | 40 | 12.19 | 154,600 | 70 125 | 155,300 | 70 442 | | | | |
| | 72.1 | 152' 5" | 46.46 | 50 | 15.24 | 120,700 | 54 748 | 121,400 | 55 066 | 114,500 | 51 936 | | |
| | 68 0 | 148' 10" | 45.35 | 60 | 18.29 | 97,800 | 44 361 | 98,500 | 44 678 | 99,200 | 44 996 | | |
| | 63.8 | 144' 4" | 43.99 | 70 | 21.34 | 81,300 | 36 877 | 82,000 | 37 194 | 82,600 | 37 466 | | |
| | 59.5 | 138' 11" | 42.34 | 80 | 24 38 | 68,900 | 31 252 | 69,500 | 31 524 | 70,200 | 31 842 | | |
| | 54.9 | 132' 6" | 40.38 | 90 | 27.43 | 59,300 | 26 898 | 59,800 | 27 124 | 60,400 | 27 396 | 57,200 | 25 945 |
| | 50.1 | 124' 10" | 38.04 | 100 | 30.48 | 51,500 | 23 360 | 52,100 | 23 632 | 52,700 | 23 904 | 53,200 | 24 131 |
| | 44.9 | 115' 8" | 35.25 | 110 | 33.53 | 45,300 | 20 547 | 45,800 | 20 774 | 46,300 | 21 001 | 46,800 | 21 228 |
| | 39.2 | 104' 7" | 31.87 | 120 | 36.58 | 40,100 | 18 189 | 40,600 | 18 415 | 41,100 | 18 642 | 41,500 | 18 824 |
| | 32.7 | 90' 9" | 27.67 | 130 | 39.62 | 35,900 | 16 283 | 36,300 | 16 465 | 36,700 | 16 646 | 37,100 | 16 828 |
| | 24.8 | 72' 7" | 22.11 | 140 | 42.67 | 32,300 | 14 651 | 32,600 | 14 787 | 32,900 | 14 923 | 33,200 | 15 059 |
| | 12.9 | 43' 3" | 13.18 | 150 | 45.72 | 25,900 | 11 748 | 26,200 | 11 884 | 26,600 | 12 065 | 27,500 | 12 473 |

(continued)

①Load handled off main boom head sheaves with 10' (3 05 m) boom tip extension mounted on boom.
②Measured vertically from center of boom head sheave to base of turntable bearing mounting.
③Measured from centerline of rotation to center of gravity of freely suspended load

# TG-1900 lifting crane capacities — pedestal, bogie, or gantry mounted

Refer to **Notes** page 15.

| Boom | | | | Load radius③ | | Capacities — Main boom only① | | | | | | | |
|---|---|---|---|---|---|---|---|---|---|---|---|---|---|
| | Angle | Boom point height② | | | | 4-part hoist line | | 3-part hoist line | | 2-part hoist line | | 1-part hoist line | |
| Length | Degree | Feet | meters | Feet | meters | Pounds | kilograms | Pounds | kilograms | Pounds | kilograms | Pounds | kilograms |
| 160′ (48 77 m) | 84 2 | 168′ 11″ | 51.48 | 20 | 6.10 | | | | | 114,400 | 51 890 | | |
| | 82.4 | 168′ 4″ | 51.30 | 25 | 7.62 | | | | | | | 57,200 | 25 945 |
| | 80.6 | 167′ 7″ | 51.07 | 30 | 9.14 | | | | | | | | |
| | 78.8 | 166′ 8″ | 50.79 | 35 | 10.67 | 172,400 | 78 199 | 171,700 | 77 881 | | | | |
| | 76.9 | 165′ 7″ | 50.47 | 40 | 12 19 | 149,600 | 67 857 | 153,500 | 69 626 | | | | |
| | 73.2 | 162′ 11″ | 49.65 | 50 | 15.24 | 118,800 | 53 886 | 120,400 | 54 612 | 114,400 | 51 890 | | |
| | 69.4 | 159′ 6″ | 48.62 | 60 | 18.29 | 96,800 | 43 907 | 97,500 | 44 225 | 98,200 | 44 542 | | |
| | 65.6 | 155′ 5″ | 47.36 | 70 | 21.34 | 80,300 | 36 423 | 81,000 | 36 740 | 81,700 | 37 058 | | |
| | 61.6 | 150′ 5″ | 45.84 | 80 | 24.38 | 67,800 | 30 753 | 68,500 | 31 071 | 69,200 | 31 388 | | |
| | 57.4 | 144′ 6″ | 44.05 | 90 | 27.43 | 58,200 | 26 399 | 58,800 | 26 671 | 59,500 | 26 988 | 57,200 | 25 945 |
| | 53.0 | 137′ 7″ | 41.93 | 100 | 30.48 | 50,400 | 22 861 | 51,000 | 23 133 | 51,700 | 23 450 | 52,300 | 23 722 |
| | 48.4 | 129′ 5″ | 39.44 | 110 | 33.53 | 44,100 | 20 003 | 44,700 | 20 275 | 45,300 | 20 547 | 45,900 | 20 819 |
| | 43.4 | 119′ 8″ | 36.49 | 120 | 36.58 | 39,000 | 17 690 | 39,500 | 17 916 | 40,000 | 18 143 | 40,500 | 18 370 |
| | 37.9 | 108′ 1″ | 32.94 | 130 | 39.62 | 34,600 | 15 694 | 35,100 | 15 921 | 35,600 | 16 147 | 36,100 | 16 374 |
| | 31.6 | 93′ 8″ | 28.55 | 140 | 42.67 | 30,900 | 14 016 | 31,400 | 14 242 | 31,800 | 14 424 | 32,200 | 14 605 |
| | 24.0 | 74′ 9″ | 22.77 | 150 | 45.72 | 27,900 | 12 655 | 28,200 | 12 791 | 28,500 | 12 927 | 28,900 | 13 108 |
| | 12.5 | 44′ 4″ | 13.52 | 160 | 48.77 | 22,300 | 10 115 | 22,600 | 10 251 | 22,900 | 10 387 | 23,700 | 10 750 |
| 170′ (51.82 m) | 84.5 | 178′ 11″ | 54.54 | 20 | 6.10 | | | | | 114,300 | 51 845 | | |
| | 82.8 | 178′ 5″ | 54.37 | 25 | 7.62 | | | | | | | 57,100 | 25 900 |
| | 81.1 | 177′ 8″ | 54.16 | 30 | 9 14 | | | | | | | | |
| | 79 4 | 176′ 10″ | 53.90 | 35 | 10 67 | 165,600 | 75 114 | 166,400 | 75 477 | | | | |
| | 77.7 | 175′ 10″ | 53.59 | 40 | 12.19 | 144,000 | 65 317 | 147,700 | 66 995 | | | | |
| | 74.2 | 173′ 4″ | 52.83 | 50 | 15.24 | 114,000 | 51 709 | 116,600 | 52 888 | 114,300 | 51 845 | | |
| | 70.7 | 170′ 2″ | 51.87 | 60 | 18.29 | 94,400 | 42 819 | 96,500 | 43 771 | 97,300 | 44 134 | | |
| | 67.1 | 166′ 4″ | 50.69 | 70 | 21.34 | 79,200 | 35 924 | 80,000 | 36 287 | 80,700 | 36 604 | | |
| | 63.4 | 161′ 8″ | 49.28 | 80 | 24.38 | 66,800 | 30 299 | 67,500 | 30 617 | 68,300 | 30 980 | | |
| | 59.5 | 156′ 3″ | 47.62 | 90 | 27.43 | 57,100 | 25 900 | 57,800 | 26 217 | 58,500 | 26 535 | 57,100 | 25 900 |
| | 55.5 | 149′ 11″ | 45.68 | 100 | 30.48 | 49,400 | 22 407 | 50,000 | 22 679 | 50,700 | 22 997 | 51,400 | 23 314 |
| | 51.3 | 142′ 6″ | 43.42 | 110 | 33.53 | 43,000 | 19 504 | 43,700 | 19 821 | 44,300 | 20 094 | 45,000 | 20 411 |
| | 46.9 | 133′ 10″ | 40.78 | 120 | 36.58 | 37,800 | 17 145 | 38,400 | 17 417 | 39,000 | 17 690 | 39,600 | 17 962 |
| | 42 1 | 123′ 7″ | 37.68 | 130 | 39 62 | 33,500 | 15 195 | 34,000 | 15 422 | 34,600 | 15 694 | 35,100 | 15 921 |
| | 36 8 | 111′ 5″ | 33.97 | 140 | 42.67 | 29,700 | 13 471 | 30,200 | 13 698 | 30,700 | 13 925 | 31,200 | 14 152 |
| | 30.7 | 96′ 6″ | 29.40 | 150 | 45.72 | 26,600 | 12 065 | 27,000 | 12 246 | 27,400 | 12 428 | 27,800 | 12 609 |
| | 23.2 | 76′ 10″ | 23.41 | 160 | 48.77 | 24,000 | 10 886 | 24,300 | 11 022 | 24,600 | 11 158 | 25,000 | 11 339 |
| | 12.1 | 45′ 5″ | 13 85 | 170 | 51 82 | 19,000 | 8 618 | 19,200 | 8 708 | 19,600 | 8 890 | 20,200 | 9 162 |
| 180′ (54.86 m) | 84.8 | 189′ 0″ | 57.60 | 20 | 6.10 | | | | | 114,200 | 51 800 | | |
| | 83.2 | 188′ 6″ | 57.45 | 25 | 7.62 | | | | | | | 57,100 | 25 900 |
| | 81.6 | 187′ 10″ | 57.24 | 30 | 9.14 | | | | | | | | |
| | 80 0 | 187′ 0″ | 57 00 | 35 | 10.67 | 152,500 | 69 172 | 153,400 | 69 581 | | | | |
| | 78 4 | 186′ 1″ | 56.71 | 40 | 12.19 | 138,900 | 63 003 | 142,500 | 64 636 | | | | |
| | 75 1 | 183′ 8″ | 55.99 | 50 | 15.24 | 109,600 | 49 713 | 112,200 | 50 893 | 114,200 | 51 800 | | |
| | 71.8 | 180′ 9″ | 55.08 | 60 | 18 29 | 90,500 | 41 050 | 92,600 | 42 002 | 96,000 | 43 544 | | |
| | 68 4 | 177′ 1″ | 53.98 | 70 | 21.34 | 76,900 | 34 881 | 78,700 | 35 697 | 79,800 | 36 196 | | |
| | 65 0 | 172′ 10″ | 52.67 | 80 | 24.38 | 65,800 | 29 846 | 66,500 | 30 163 | 67,300 | 30 526 | | |
| | 61.4 | 167′ 9″ | 51.13 | 90 | 27 43 | 56,100 | 25 446 | 56,800 | 25 764 | 57,600 | 26 126 | 57,100 | 25 900 |
| | 57.7 | 161′ 10″ | 49.33 | 100 | 30 48 | 48,300 | 21 908 | 49,000 | 22 226 | 49,800 | 22 588 | 50,500 | 22 906 |
| | 53 8 | 155′ 1″ | 47.26 | 110 | 33.53 | 42,000 | 19 050 | 42,700 | 19 368 | 43,400 | 19 685 | 44,100 | 20 003 |
| | 49.8 | 147′ 2″ | 44.86 | 120 | 36.58 | 36,700 | 16 646 | 37,400 | 16 964 | 38,000 | 17 236 | 38,700 | 17 554 |
| | 45 5 | 138′ 1″ | 42.08 | 130 | 39 62 | 32,300 | 14 651 | 32,900 | 14 923 | 33,600 | 15 240 | 34,200 | 15 512 |
| | 40.8 | 127′ 5″ | 38.83 | 140 | 42.67 | 28,600 | 12 972 | 29,100 | 13 199 | 29,700 | 13 471 | 30,300 | 13 743 |
| | 35 7 | 114′ 9″ | 34.96 | 150 | 45.72 | 25,300 | 11 475 | 25,800 | 11 702 | 26,300 | 11 929 | 26,900 | 12 201 |
| | 29.8 | 99′ 2″ | 30.22 | 160 | 48.77 | 22,600 | 10 251 | 23,100 | 10 477 | 23,500 | 10 659 | 23,900 | 10 840 |
| | 22.6 | 78′ 10″ | 24.03 | 170 | 51.82 | 20,400 | 9 253 | 20,700 | 9 389 | 21,100 | 9 570 | 21,400 | 9 706 |
| | 11.8 | 46′ 6″ | 14.17 | 180 | 54.86 | 16,000 | 7 257 | 16,200 | 7 348 | 16,500 | 7 484 | 17,100 | 7 756 |

(continued)

①Load handled off main boom head sheaves with 10′ (3.05 m) boom tip extension mounted on boom.
②Measured vertically from center of boom head sheave to base of turntable bearing mounting.
③Measured from centerline of rotation to center of gravity of freely suspended load.

# TG-1900 lifting crane capacities — pedestal, bogie, or gantry mounted

Refer to Notes page 15.

| Boom | | | | Load radius③ | | Capacities — Main boom only① | | | | | | | |
|---|---|---|---|---|---|---|---|---|---|---|---|---|---|
| | Angle | Boom point height② | | | | 4-part hoist line | | 3-part hoist line | | 2-part hoist line | | 1-part hoist line | |
| Length | Degree | Feet | meters | Feet | meters | Pounds | kilograms | Pounds | kilograms | Pounds | kilograms | Pounds | kilograms |
| 190′ (57.91 m) | 85.1 | 199′ 0″ | 60.66 | 20 | 6.10 | | | | | 114,100 | 51 754 | | |
| | 83.6 | 198′ 6″ | 60.51 | 25 | 7 62 | | | | | ↑ | ↑ | 57,000 | 25 854 |
| | 82.1 | 197′ 11″ | 60 32 | 30 | 9.14 | | | | | | | ↑ | ↑ |
| | 80.5 | 197′ 2″ | 60 09 | 35 | 10.67 | 139,400 | 63 230 | 140,300 | 63 639 | ↓ | ↓ | | |
| | 79.0 | 196′ 3″ | 59 81 | 40 | 12.19 | 134,200 | 60 872 | 137,700 | 62 459 | 114,100 | 51 754 | | |
| | 75.9 | 194′ 0″ | 59.14 | 50 | 15.24 | 105,500 | 47 854 | 108,000 | 48 987 | 112,500 | 51 029 | | |
| | 72.8 | 191′ 3″ | 58.28 | 60 | 18.29 | 86,900 | 39 417 | 88,900 | 40 324 | 92,200 | 41 821 | | |
| | 69.6 | 187′ 10″ | 57.25 | 70 | 21.34 | 73,700 | 33 429 | 75,400 | 34 200 | 78,100 | 35 425 | | |
| | 66.4 | 183′ 9″ | 56.01 | 80 | 24.38 | 63,700 | 28 893 | 65,200 | 29 574 | 66,400 | 30 118 | | |
| | 63.0 | 179′ 0″ | 54.57 | 90 | 27.43 | 55,000 | 24 947 | 55,800 | 25 310 | 56,700 | 25 718 | 57,000 | 25 854 |
| | 59.6 | 173′ 7″ | 52.90 | 100 | 30.48 | 47,300 | 21 454 | 48,000 | 21 772 | 48,800 | 22 135 | 49,600 | 22 498 |
| | 56.0 | 167′ 3″ | 50.98 | 110 | 33.53 | 40,900 | 18 551 | 41,700 | 18 914 | 42,400 | 19 232 | 43,200 | 19 595 |
| | 52.3 | 160′ 0″ | 48.78 | 120 | 36.58 | 35,700 | 16 193 | 36,400 | 16 510 | 37,100 | 16 828 | 37,800 | 17 145 |
| | 48.4 | 151′ 9″ | 46.25 | 130 | 39.62 | 31,200 | 14 152 | 31,900 | 14 469 | 32,600 | 14 787 | 33,300 | 15 104 |
| | 44.2 | 142′ 2″ | 43.34 | 140 | 42.67 | 27,500 | 12 473 | 28,100 | 12 745 | 28,700 | 13 018 | 29,400 | 13 335 |
| | 39.7 | 131′ 1″ | 39.95 | 150 | 45.72 | 24,200 | 10 976 | 24,800 | 11 249 | 25,400 | 11 521 | 25,900 | 11 748 |
| | 34.7 | 117′ 11″ | 35.93 | 160 | 48.77 | 21,400 | 9 706 | 21,900 | 9 933 | 22,500 | 10 205 | 23,000 | 10 432 |
| | 29.0 | 101′ 9″ | 31 02 | 170 | 51 82 | 19,100 | 8 663 | 19,500 | 8 845 | 20,000 | 9 071 | 20,400 | 9 253 |
| | 22.0 | 80′ 9″ | 24.63 | 180 | 54.86 | 17,200 | 7 801 | 17,500 | 7 937 | 17,900 | 8 119 | 18,200 | 8 255 |
| | 11.5 | 47′ 6″ | 14 48 | 190 | 57.91 | 13,200 | 5 987 | 13,400 | 6 078 | 13,700 | 6 214 | 14,200 | 6 441 |
| 200′ (60.96 m) | 85.4 | 209′ 1″ | 63.72 | 20 | 6.10 | | | | | 114,000 | 51 709 | | |
| | 83.9 | 208′ 7″ | 63 58 | 25 | 7 62 | | | | | ↑ | ↑ | 57,000 | 25 854 |
| | 82.5 | 208′ 0″ | 63.40 | 30 | 9.14 | | | | | | | ↑ | ↑ |
| | 81.0 | 207′ 3″ | 63.18 | 35 | 10.67 | | | | | ↓ | ↓ | | |
| | 79.6 | 206′ 5″ | 62.92 | 40 | 12.19 | 125,300 | 56 835 | 126,300 | 57 288 | 114,000 | 51 709 | | |
| | 76.6 | 204′ 4″ | 62.27 | 50 | 15.24 | 101,600 | 46 084 | 104,200 | 47 264 | 108,600 | 49 260 | | |
| | 73.7 | 201′ 8″ | 61.47 | 60 | 18.29 | 83,400 | 37 829 | 85,500 | 38 782 | 88,800 | 40 279 | | |
| | 70.7 | 198′ 5″ | 60.49 | 70 | 21 34 | 70,600 | 32 023 | 72,300 | 32 794 | 74,900 | 33 974 | | |
| | 67.6 | 194′ 8″ | 59.32 | 80 | 24.38 | 60,900 | 27 623 | 62,400 | 28 304 | 64,600 | 29 302 | 57,000 | 25 854 |
| | 64.5 | 190′ 2″ | 57.97 | 90 | 27.43 | 53,200 | 24 131 | 54,600 | 24 766 | 55,700 | 25 265 | 56,600 | 25 673 |
| | 61.2 | 185′ 1″ | 56.41 | 100 | 30.48 | 46,200 | 20 955 | 47,100 | 21 364 | 47,900 | 21 727 | 48,800 | 22 135 |
| | 57.9 | 179′ 2″ | 54 62 | 110 | 33.53 | 39,900 | 18 098 | 40,700 | 18 461 | 41,500 | 18 824 | 42,300 | 19 186 |
| | 54.5 | 172′ 6″ | 52.58 | 120 | 36.58 | 34,600 | 15 694 | 35,400 | 16 057 | 36,200 | 16 420 | 36,900 | 16 737 |
| | 50.9 | 164′ 10″ | 50 25 | 130 | 39.62 | 30,200 | 13 698 | 30,900 | 14 016 | 31,700 | 14 378 | 32,400 | 14 696 |
| | 47.1 | 156′ 2″ | 47.60 | 140 | 42.67 | 26,400 | 11 974 | 27,100 | 12 292 | 27,800 | 12 609 | 28,500 | 12 927 |
| | 43.0 | 146′ 2″ | 44.56 | 150 | 45.72 | 23,100 | 10 477 | 23,700 | 10 750 | 24,400 | 11 067 | 25,000 | 11 339 |
| | 38.6 | 134′ 7″ | 41.03 | 160 | 48.77 | 20,300 | 9 207 | 20,900 | 9 480 | 21,500 | 9 752 | 22,100 | 10 024 |
| | 33.8 | 121′ 0″ | 36.87 | 170 | 51.82 | 17,900 | 8 119 | 18,400 | 8 346 | 18,900 | 8 572 | 19,500 | 8 845 |
| | 28.2 | 104′ 4″ | 31 80 | 180 | 54.86 | 15,800 | 7 166 | 16,300 | 7 393 | 16,700 | 7 574 | 17,200 | 7 801 |
| | 21.4 | 82′ 8″ | 25 21 | 190 | 57 91 | 14,200 | 6 441 | 14,500 | 6 577 | 14,900 | 6 758 | 15,200 | 6 894 |
| | 11.2 | 48′ 6″ | 14.78 | 200 | 60 96 | 10,600 | 4 808 | 10,800 | 4 898 | 11,100 | 5 034 | 11,500 | 5 216 |

①Load handled off main boom head sheaves with 10′ (3.05 m) boom tip extension mounted on boom.
②Measured vertically from center of boom head sheave to base of turntable bearing mounting.
③Measured from centerline of rotation to center of gravity of freely suspended load.

# TG-1900 lifting crane capacities — off boom tip extension① only

**Mounting** — pedestal, bogie, gantry or free standing tower with or without climbing frame.

**Mast** — 43′ 0⅛″ (13.11 m) over-all height.

**Boom** — tubular; 75″ x 75″ (1.91 x 1.91 m) with 40′ (12.19 m) base section, 40′ (12.19 m) top section, 1¾″ (44 mm) diameter boom pendants, with boom tip extension.

**Boom tip extension** — tubular; 14,800# (6 713 kg) rating; 10′ (3.05 m) long.

**Counterweights** — Total 94,400# (42 820 kg). Includes one fixed counterweight — 23,600# (10 705 kg) plus one moving counterweight — 70,800# (32 115 kg) consisting of three sections weighing 23,600# (10 705 kg) each.

| Boom① | | | | | | Capacities | |
|---|---|---|---|---|---|---|---|
| | | Boom point height③ | | Load radius③ | | 1-part hoist line | |
| Length | Angle Degree | Feet | meters | Feet | meters | Pounds | kilograms |
| 80′ (24.38 m) | 75.5 | 95′ 8″ | 29.17 | 30 | 9.14 | 14,800 | 6 713 |
| | 72.2 | 94′ 0″ | 28.65 | 35 | 10.67 | ↑ | ↑ |
| | 68.7 | 92′ 0″ | 28.04 | 40 | 12.19 | | |
| | 61.6 | 87′ 0″ | 26.52 | 50 | 15.24 | | |
| | 53.8 | 80′ 2″ | 24.44 | 60 | 18.29 | | |
| | 45.1 | 71′ 0″ | 21.64 | 70 | 21.34 | | |
| | 34.7 | 58′ 2″ | 17.74 | 80 | 24.38 | 14,800 | 6 713 |
| 90′ (27.43 m) | 77.0 | 106′ 0″ | 32.31 | 30 | 9.14 | 14,800 | 6 713 |
| | 74.0 | 104′ 7″ | 31.88 | 35 | 10.67 | ↑ | ↑ |
| | 71.0 | 102′ 10″ | 31.33 | 40 | 12.19 | | |
| | 64.7 | 98′ 5″ | 29.99 | 50 | 15.24 | | |
| | 58.0 | 92′ 6″ | 28.19 | 60 | 18.29 | | |
| | 50.8 | 84′ 11″ | 25.88 | 70 | 21.34 | | |
| | 42.6 | 74′ 10″ | 22.80 | 80 | 24.38 | | |
| | 32.8 | 61′ 0″ | 18.59 | 90 | 27.43 | 14,800 | 6 713 |
| 100′ (30.48 m) | 75.5 | 115′ 0″ | 35.05 | 35 | 10.67 | 14,800 | 6 713 |
| | 72.8 | 113′ 5″ | 34.56 | 40 | 12.19 | ↑ | ↑ |
| | 67.2 | 109′ 6″ | 33.38 | 50 | 15.24 | | |
| | 61.3 | 104′ 4″ | 31.79 | 60 | 18.29 | | |
| | 55.0 | 97′ 8″ | 29.78 | 70 | 21.34 | | |
| | 48.2 | 89′ 4″ | 27.22 | 80 | 24.38 | | |
| | 40.5 | 78′ 6″ | 23.93 | 90 | 27.43 | | |
| | 31.1 | 63′ 8″ | 19.42 | 100 | 30.48 | 14,800 | 6 713 |
| 110′ (33.53 m) | 76.8 | 125′ 5″ | 38.22 | 35 | 10.67 | 14,800 | 6 713 |
| | 74.3 | 124′ 0″ | 37.80 | 40 | 12.19 | ↑ | ↑ |
| | 69.2 | 120′ 5″ | 36.70 | 50 | 15.24 | | |
| | 63.9 | 115′ 8″ | 35.27 | 60 | 18.29 | | |
| | 58.4 | 111′ 11″ | 34.11 | 70 | 21.34 | | |
| | 52.4 | 102′ 7″ | 31.27 | 80 | 24.38 | | |
| | 45.9 | 93′ 6″ | 28.50 | 90 | 27.43 | | |
| | 38.6 | 81′ 11″ | 24.96 | 100 | 30.48 | | |
| | 29.7 | 66′ 2″ | 20.18 | 110 | 33.53 | 14,800 | 6 713 |

①Load handled off peak sheave of 10′ (3.05 m) boom tip extension mounted on boom.
②Measured vertically from center of boom tip extension peak sheave to base of turntable bearing mounting.
③Measured from centerline of rotation to center of gravity of freely suspended load.

| Boom① | | | | | | Capacities | |
|---|---|---|---|---|---|---|---|
| | | Boom point height② | | Load radius③ | | 1-part hoist line | |
| Length | Angle Degree | Feet | meters | Feet | meters | Pounds | kilograms |
| 120′ (36.58 m) | 77.8 | 135′ 8″ | 41.36 | 35 | 10.67 | 14,800 | 6 713 |
| | 75.5 | 134′ 5″ | 40.97 | 40 | 12.19 | ↑ | ↑ |
| | 70.9 | 131′ 1″ | 39.96 | 50 | 15.24 | | |
| | 66.1 | 126′ 11″ | 38.68 | 60 | 18.29 | | |
| | 61.1 | 121′ 7″ | 37.06 | 70 | 21.34 | | |
| | 55.8 | 115′ 1″ | 35.08 | 80 | 24.38 | | |
| | 50.2 | 107′ 2″ | 32.67 | 90 | 27.43 | | |
| | 44.0 | 97′ 6″ | 29.72 | 100 | 30.48 | | |
| | 37.0 | 85′ 2″ | 25.97 | 110 | 33.53 | | |
| | 28.5 | 68′ 8″ | 20.94 | 120 | 36.58 | 14,800 | 6 713 |
| 130′ (39.62 m) | 76.6 | 144′ 8″ | 44.10 | 40 | 12.19 | 14,800 | 6 713 |
| | 72.3 | 141′ 8″ | 43.19 | 50 | 15.24 | ↑ | ↑ |
| | 67.9 | 137′ 11″ | 42.03 | 60 | 18.29 | | |
| | 63.4 | 133′ 1″ | 40.57 | 70 | 21.34 | | |
| | 58.6 | 127′ 2″ | 38.77 | 80 | 24.38 | | |
| | 53.6 | 120′ 2″ | 36.64 | 90 | 27.43 | | |
| | 48.2 | 117′ 8″ | 34.05 | 100 | 30.48 | | |
| | 42.3 | 101′ 4″ | 30.88 | 110 | 33.53 | | |
| | 35.5 | 88′ 4″ | 26.91 | 120 | 36.58 | | |
| | 27.4 | 71′ 1″ | 21.67 | 130 | 39.62 | 14,800 | 6 713 |
| 140′ (42.67 m) | 77.5 | 155′ 1″ | 47.27 | 40 | 12.19 | 14,700 | 6 668 |
| | 73.5 | 152′ 4″ | 46.42 | 50 | 15.24 | ↑ | ↑ |
| | 69.5 | 148′ 8″ | 45.32 | 60 | 18.29 | | |
| | 65.3 | 144′ 4″ | 43.98 | 70 | 21.34 | | |
| | 60.9 | 138′ 11″ | 42.34 | 80 | 24.38 | | |
| | 56.4 | 132′ 7″ | 40.42 | 90 | 27.43 | | |
| | 51.6 | 125′ 0″ | 38.10 | 100 | 30.48 | | |
| | 46.4 | 115′ 11″ | 35.33 | 110 | 33.53 | | |
| | 40.7 | 104′ 11″ | 31.97 | 120 | 36.58 | | |
| | 34.2 | 91′ 4″ | 27.83 | 130 | 39.82 | | |
| | 26.4 | 73′ 5″ | 22.37 | 140 | 42.67 | 14,700 | 6 668 |

(continued)

Refer to Notes page 15.

# TG-1900 lifting crane capacities — off boom tip extension① only

Refer to Notes page 15.

| Boom① | | Boom point height② | | Load radius③ | | Capacities 1-part hoist line | |
|---|---|---|---|---|---|---|---|
| Length | Angle Degree | Feet | meters | Feet | meters | Pounds | kilograms |
| 150′ (45.72 m) | 78.3 | 165′ 4″ | 50.38 | 40 | 12.19 | 14,700 | 6 668 |
| | 74.6 | 162′ 8″ | 49.59 | 50 | 15.24 | ↑ | ↑ |
| | 70.8 | 159′ 5″ | 48.59 | 60 | 18.29 | | |
| | 66.9 | 155′ 4″ | 47.34 | 70 | 21.34 | | |
| | 62.9 | 150′ 5″ | 45.84 | 80 | 24.38 | | |
| | 58.8 | 144′ 6″ | 44.04 | 90 | 27.43 | | |
| | 54.4 | 137′ 8″ | 41.97 | 100 | 30.48 | | |
| | 49.8 | 129′ 7″ | 39.50 | 110 | 33.53 | | |
| | 44.8 | 120′ 0″ | 36.58 | 120 | 36.58 | | |
| | 39.3 | 108′ 6″ | 33.07 | 130 | 39.62 | | |
| | 33.1 | 94′ 2″ | 28.71 | 140 | 42.67 | | |
| | 25.5 | 75′ 7″ | 23.04 | 150 | 45.72 | 14,700 | 6 668 |
| 160′ (48.77 m) | 75.5 | 173′ 1″ | 52.76 | 50 | 15.24 | 14,700 | 6 668 |
| | 72.0 | 170′ 0″ | 51.82 | 60 | 18.29 | ↑ | ↑ |
| | 68.4 | 166′ 2″ | 50.66 | 70 | 21.34 | | |
| | 64.7 | 161′ 7″ | 49.26 | 80 | 24.38 | | |
| | 60.8 | 156′ 2″ | 47.61 | 90 | 27.43 | | |
| | 56.8 | 149′ 11″ | 45.69 | 100 | 30.48 | | |
| | 52.6 | 142′ 7″ | 43.46 | 110 | 33.53 | | |
| | 48.2 | 134′ 0″ | 40.84 | 120 | 36.58 | | |
| | 43.4 | 123′ 11″ | 37.76 | 130 | 39.62 | | |
| | 38.1 | 111′ 11″ | 34.11 | 140 | 42.67 | | |
| | 32.0 | 97′ 1″ | 29.60 | 150 | 45.72 | | |
| | 24.7 | 77′ 8″ | 23.68 | 160 | 48.77 | 14,700 | 6 668 |
| 170′ (51.82 m) | 76.4 | 183′ 6″ | 55.93 | 50 | 15.24 | 14,700 | 6 668 |
| | 73.0 | 180′ 6″ | 55.02 | 60 | 18.29 | ↑ | ↑ |
| | 69.6 | 177′ 0″ | 53.95 | 70 | 21.34 | | |
| | 66.2 | 172′ 8″ | 52.64 | 80 | 24.38 | | |
| | 62.6 | 167′ 8″ | 51.11 | 90 | 27.43 | | |
| | 58.9 | 161′ 11″ | 49.35 | 100 | 30.48 | | |
| | 55.1 | 155′ 1″ | 47.27 | 110 | 33.53 | | |
| | 51.0 | 147′ 4″ | 44.90 | 120 | 36.58 | | |
| | 46.7 | 138′ 4″ | 42.15 | 130 | 39.62 | | |
| | 42.1 | 127′ 8″ | 38.92 | 140 | 42.67 | | |
| | 36.9 | 115′ 2″ | 35.11 | 150 | 45.72 | | |
| | 31.1 | 99′ 10″ | 30.42 | 160 | 48.77 | | |
| | 23.9 | 79′ 8″ | 24.29 | 170 | 51.82 | 14,700 | 6 668 |
| 180′ (54.86 m) | 77.1 | 193′ 10″ | 59.07 | 50 | 15.24 | 14,700 | 6 668 |
| | 74.0 | 191′ 0″ | 58.22 | 60 | 18.29 | ↑ | ↑ |
| | 70.8 | 187′ 8″ | 57.21 | 70 | 21.34 | | |
| | 67.5 | 183′ 8″ | 55.99 | 80 | 24.38 | | |
| | 64.2 | 179′ 0″ | 54.56 | 90 | 27.43 | | |
| | 60.7 | 173′ 7″ | 52.91 | 100 | 30.48 | | |
| | 57.2 | 167′ 4″ | 50.99 | 110 | 33.53 | | |
| | 53.5 | 160′ 2″ | 48.83 | 120 | 36.58 | | |
| | 49.5 | 151′ 11″ | 46.30 | 130 | 39.62 | | |
| | 45.4 | 142′ 5″ | 43.40 | 140 | 42.67 | | |
| | 40.9 | 131′ 5″ | 40.05 | 150 | 45.72 | | |
| | 35.9 | 118′ 5″ | 36.09 | 160 | 48.77 | | |
| | 30.2 | 102′ 5″ | 31.21 | 170 | 51.82 | | |
| | 23.3 | 81′ 8″ | 24.90 | 180 | 54.86 | 14,700 | 6 668 |

①Load handled off peak sheave of 10′ (3.05 m) boom tip extension mounted on boom.
②Measured vertically from center of boom tip extension peak sheave to base of turntable bearing mounting.
③Measured from centerline of rotation to center of gravity of freely suspended load.

| Boom① | | Boom point height③ | | Load radius③ | | Capacities 1-part hoist line | |
|---|---|---|---|---|---|---|---|
| Length | Angle Degree | Feet | meters | Feet | meters | Pounds | kilograms |
| 190′ (57.91 m) | 77.8 | 204′ 1″ | 62.21 | 50 | 15.24 | 14,700 | 6 668 |
| | 74.8 | 201′ 6″ | 61.42 | 60 | 18.29 | ↑ | ↑ |
| | 71.8 | 198′ 4″ | 60.44 | 70 | 21.34 | | |
| | 68.7 | 194′ 6″ | 59.28 | 80 | 24.38 | | |
| | 65.6 | 190′ 1″ | 57.94 | 90 | 27.43 | | |
| | 62.3 | 185′ 0″ | 56.39 | 100 | 30.48 | | |
| | 59.0 | 179′ 2″ | 54.62 | 110 | 33.53 | | |
| | 55.6 | 172′ 7″ | 52.61 | 120 | 36.58 | | |
| | 52.0 | 165′ 0″ | 50.29 | 130 | 39.62 | | |
| | 48.2 | 156′ 4″ | 47.67 | 140 | 42.67 | | |
| | 44.1 | 146′ 5″ | 44.65 | 150 | 45.72 | | |
| | 39.8 | 135′ 0″ | 41.15 | 160 | 48.77 | | |
| | 34.9 | 121′ 6″ | 37.03 | 170 | 51.82 | | |
| | 29.4 | 105′ 0″ | 32.00 | 180 | 54.86 | 14,700 | 6 668 |
| | 22.6 | 83′ 8″ | 25.51 | 190 | 57.91 | 12,600 | 5 715 |
| 200′ (60.96 m) | 78.4 | 214′ 4″ | 65.32 | 50 | 15.24 | 14,700 | 6 668 |
| | 75.5 | 211′ 10″ | 64.56 | 60 | 18.29 | ↑ | ↑ |
| | 72.7 | 208′ 10″ | 63.64 | 70 | 21.34 | | |
| | 69.8 | 205′ 4″ | 62.58 | 80 | 24.38 | | |
| | 66.8 | 201′ 1″ | 61.30 | 90 | 27.43 | | |
| | 63.8 | 196′ 4″ | 59.83 | 100 | 30.48 | | |
| | 60.7 | 190′ 11″ | 58.19 | 110 | 33.53 | | |
| | 57.4 | 184′ 8″ | 56.30 | 120 | 36.58 | | |
| | 54.1 | 177′ 8″ | 54.16 | 130 | 39.62 | | |
| | 50.6 | 169′ 8″ | 51.72 | 140 | 42.67 | | |
| | 46.9 | 160′ 8″ | 48.98 | 150 | 45.72 | | |
| | 43.0 | 150′ 5″ | 45.84 | 160 | 48.77 | | |
| | 38.7 | 138′ 6″ | 42.21 | 170 | 51.82 | 14,700 | 6 668 |
| | 34.0 | 124′ 6″ | 37.95 | 180 | 54.86 | 13,900 | 6 305 |
| | 28.7 | 107′ 6″ | 32.77 | 190 | 57.91 | 11,800 | 5 352 |
| | 22.1 | 85′ 7″ | 26.09 | 200 | 60.96 | 9,900 | 4 491 |

# TG-1900 lifting crane notes for crane mounted on a 9′ 9″ x 9′ 9″ (2.97 x 2.97 m) tower with or without climbing frame, pedestal, or on a bogie or gantry.

**General notes:**

1. Loads shown are in pounds and in all cases are limited by strength capabilities of the machine. Proper design of the substructure to withstand the loadings imposed by the machine shall be the responsibility of the purchaser. A deduction must be made from these capacities for weight of load handling equipment such as hook block, hook, sling, grapple, load weighing devices, etc.

2. The operator must make the following considerations when operating the crane:
   a. Make certain the actual load operating radius is the same as the radius specified on the capacity chart. The load radius is measured from the center of the tower base section to the center of gravity of the freely suspended load. The user must make allowances for increases in the load radius caused by stretching of the boom suspension and deflection of the boom and tower.
   b. Prevent shock or impact loading of the crane's structure especially when operating during low temperatures.
   c. Effect of wind on loads with large surface areas.

3. Do not lift a load with a single part of main hoist line at boom angles greater than 84.0°.

4. Do not lift a load on the 10′ (3.05 m) boom tip extension when the main hook is in use.

5. For each 10 feet (3.05 m) of boom foot height above the lowest hook position, the following deductions must be made from these lifting capacities:
   192# (87 kg) when using 4 parts of main hoist line
   144# (65 kg) when using 3 parts of main hoist line
   96# (44 kg) when using 2 parts of main hoist line
   48# (22 kg) when using 1 part of main hoist line

6. If the 10′ (3.05 m) boom tip extension is not attached to the boom, 2,400 pounds (1 089 kg) may be added to the main hoist lifting capacities but must not exceed the maximum rated capacity for the number of parts of line being used.

7. The boom hanger block is not required when using one part or two parts of main hoist line. If the hanger block is removed when using one part or two parts of main hoist line, 1,800 pounds (816 kg) may be added to these main hoist capacities but must not exceed the maximum rated capacity for the number of parts of line being used.

8. These capacities are based on a 30 m.p.h. (48.27 km/h) wind in the operating condition, and a hook load reduction must be made when winds exceed 30 m.p.h. (48.27 km/h).

9. If the machine is swung 360° in the nonoperating condition, the machine, reeving, and hook blocks must clear any obstacles with the boom stowed at its specified position. This precaution is necessary due to the weathervane rotation of the crane by the wind.

10. These capacities apply only to the machine as originally manufactured and normally equipped by FMC Corporation, Cable Crane and Excavator Division.

**Tower mounted with climbing frame**

Notes:

1. The maximum free standing tower height with a climbing frame is 162′ 7½″ (49.57 m) for boom lengths 80′ (24.38 m) through 170′ (51.82 m). For boom lengths greater than 170′ (51.82 m) and for tower heights greater than 162′ 7½″ (49.57 m), consult manufacturer for additional requirements for the crane.

2. When the crane is in the non-operating condition, the boom must be stowed to conform to one of the following conditions:

| Boom length | Condition |
|---|---|
| 80′ - 160′ (24.38 - 48.77 m) | Stow boom at maximum rated radius |
| 170′ (51.82 m) | Stow boom at horizontal position |

**Tower mounted without climbing frame**

Notes:

1. The maximum free standing tower height without a climbing frame is 162′ 7½″ (49.57 m) for boom lengths 80′ (24.38 m) through 200′ (60.96 m). For tower heights greater than 162′ 7½″ (49.57 m), consult manufacturer for additional requirements for the crane.

2. When the crane is in the non-operating condition, the boom must be stowed to conform to one of the following conditions:

| Boom length | Condition |
|---|---|
| 80′ - 160′ (24.38 - 48.77 m) | Stow boom between a 60° boom angle and maximum rated radius |
| 170′ - 190′ (51.82 - 57.91 m) | Stow boom at maximum rated radius |
| 200′ (60.96 m) | Stow boom at horizontal position |

**Pedestal, bogie or gantry mounted**

Notes:

1. Lifting capacities shown are not more than 66% of the tipping loads calculated under static conditions with the boom in the least stable direction. The user must take into account the dynamic effects of hoisting, lowering, booming, swinging, and traveling. Additional factors to be considered are freely suspended loads, track, wind or ground conditions, boom length and proper operating speeds for the existing conditions.

2. The operator must make certain the actual load operating radius is the same as the radius specified on the capacity chart. The load radius is measured from the center of the traveling base to the center of gravity of the freely suspended load. The user must make allowances for increases in the load radius caused by stretching of boom suspension and deflection of the boom and traveling base.

3. For these lifting capacities, the user must make certain that all specified ballast is properly assembled to the traveling base. Ballast may be necessary to meet stability requirement as specified on working areas and ballast requirement plate.

4. Use caution when approaching rail stops with crane bumpers. Excessive rate of contact can result in crane's instability and/or failure of rail stops.

5. When the crane is in the non-operating condition, the rail mounted traveling base must be secured with rail clamps or tie downs to prevent drifting.

We are constantly improving our products and therefore reserve the right to change designs and specifications.

FMC

**FMC Corporation**

Cable Crane & Excavator Division
1201 Sixth Street Southwest
P.O. Box 2108
Cedar Rapids Iowa 52406

Link-Belt® cranes & excavators
manufactured in: Cedar Rapids Iowa
Lexington & Bowling Green Kentucky
Ontario Canada • Milan Italy
Queretaro Mexico & Nagoya Japan (under license)

# Link-Belt® TG-1900 jib capacities

**Boom** — tubular: 75" x 75" *(1.91 x 1.91 m)* with 40' *(12.19 m)* base section, 40' *(12.19 m)* open throat top section and 1¾" *(44 mm)* diameter boom pendants.

**Jib** — tubular: 36" *(0.91 m)* wide, 30" *(0.76 m)* deep.

**Counterweights** — Total 94,400 lbs. *(42 820 kg)*. Includes one fixed counterweight — 23,600 lbs. *(10 705 kg)* plus one three-section moving counterweight — 70,800 lbs. *(32 115 kg)*.

| Boom length | Jib length | Load radius Ft. | Load radius m | Boom angle Degrees | Jib offset 15° 2-part load hoist line Pounds | 2-part load hoist line kilograms | 1-part load hoist line Pounds | 1-part load hoist line kilograms |
|---|---|---|---|---|---|---|---|---|
| 120' (36.58 m) | 30' (9.14 m) | 35 | 10.67 | 80.4 | 29,600 | 13 426 | 14,800 | 6 713 |
| | | 40 | 12.19 | 78.5 | 29,600 | 13 426 | ↑ | ↑ |
| | | 50 | 15.24 | 74.5 | 29,600 | 13 426 | | |
| | | 60 | 18.29 | 70.4 | 28,300 | 12 837 | | |
| | | 70 | 21.34 | 66.2 | 25,400 | 11 521 | | |
| | | 80 | 24.38 | 61.9 | 23,100 | 10 478 | | |
| | | 90 | 27.43 | 57.3 | 21,200 | 9 616 | | |
| | | 100 | 30.48 | 52.5 | 19,700 | 8 936 | | |
| | | 110 | 33.53 | 47.3 | 18,400 | 8 346 | | |
| | | 120 | 36.58 | 41.5 | 17,300 | 7 847 | | |
| | | 130 | 39.62 | 35.0 | 16,500 | 7 484 | ↓ | ↓ |
| | | 140 | 42.67 | 26.9 | 15,900 | 7 212 | 14,800 | 6 713 |
| | 50' (15.24 m) | 50 | 15.24 | 78.1 | 20,400 | 9 253 | 14,700 | 6 668 |
| | | 60 | 18.29 | 74.5 | 18,100 | 8 210 | ↑ | ↑ |
| | | 70 | 21.34 | 70.9 | 16,200 | 7 348 | ↓ | ↓ |
| | | 80 | 24.38 | 67.2 | 14,700 | 6 668 | 14,700 | 6 668 |
| | | 90 | 27.43 | 63.3 | 13,500 | 6 124 | 14,600 | 6 623 |
| | | 100 | 30.48 | 59.3 | 12,500 | 5 670 | 13,400 | 6 078 |
| | | 110 | 33.53 | 55.1 | 11,600 | 5 262 | 12,500 | 5 670 |
| | | 120 | 36.58 | 50.6 | 10,900 | 4 944 | 11,600 | 5 262 |
| | | 130 | 39.62 | 45.7 | 10,300 | 4 672 | 10,900 | 4 944 |
| | | 140 | 42.67 | 40.3 | 9,700 | 4 400 | 10,400 | 4 717 |
| | | 150 | 45.72 | 34.1 | 9,300 | 4 218 | 9,900 | 4 491 |
| | | 160 | 48.77 | 26.5 | 9,000 | 4 082 | 9,500 | 4 309 |
| | 70' (21.34 m) | 60 | 18.29 | 77.7 | 13,100 | 5 942 | 14,300 | 6 486 |
| | | 70 | 21.34 | 74.5 | 11,700 | 5 307 | 12,700 | 5 761 |
| | | 80 | 24.38 | 71.3 | 10,600 | 4 808 | 11,400 | 5 171 |
| | | 90 | 27.43 | 67.9 | 9,600 | 4 355 | 10,400 | 4 717 |
| | | 100 | 30.48 | 64.5 | 8,800 | 3 992 | 9,500 | 4 309 |
| | | 110 | 33.53 | 60.9 | 8,200 | 3 720 | 8,800 | 3 992 |
| | | 120 | 36.58 | 57.1 | 7,600 | 3 447 | 8,100 | 3 674 |
| | | 130 | 39.62 | 53.2 | 7,100 | 3 221 | 7,600 | 3 447 |
| | | 140 | 42.67 | 48.9 | 6,700 | 3 039 | 7,100 | 3 221 |
| | | 150 | 45.72 | 44.4 | 6,300 | 2 858 | 6,700 | 3 039 |
| | | 160 | 48.77 | 39.3 | 6,000 | 2 722 | 6,400 | 2 903 |
| | | 170 | 51.82 | 33.4 | 5,800 | 2 631 | 6,100 | 2 767 |
| | | 180 | 54.86 | 26.2 | 5,600 | 2 540 | 5,900 | 2 676 |
| 130' (39.62 m) | 30' (9.14 m) | 40 | 12.19 | 79.2 | 29,500 | 13 381 | 14,700 | 6 668 |
| | | 50 | 15.24 | 75.5 | 29,500 | 13 381 | ↑ | ↑ |
| | | 60 | 18.29 | 71.7 | 29,300 | 13 290 | | |
| | | 70 | 21.34 | 67.8 | 26,400 | 11 975 | | |
| | | 80 | 24.38 | 63.8 | 24,000 | 10 886 | | |
| | | 90 | 27.43 | 59.6 | 22,100 | 10 025 | | |
| | | 100 | 30.48 | 55.3 | 20,500 | 9 299 | | |
| | | 110 | 33.53 | 50.6 | 19,200 | 8 709 | | |
| | | 120 | 36.58 | 45.6 | 18,000 | 8 165 | | |
| | | 130 | 39.62 | 40.1 | 17,100 | 7 757 | | |
| | | 140 | 42.67 | 33.7 | 16,400 | 7 439 | | |
| | | 150 | 45.72 | 25.9 | 15,800 | 7 167 | 14,700 | 6 668 |
| | 50' (15.24 m) | 50 | 15.24 | 78.8 | 20,900 | 9 530 | 14,700 | 6 668 |
| | | 60 | 18.29 | 75.4 | 18,600 | 8 437 | ↑ | ↑ |
| | | 70 | 21.34 | 72.0 | 16,700 | 7 575 | ↓ | ↓ |
| | | 80 | 24.38 | 68.5 | 15,200 | 6 895 | 14,700 | 6 668 |

| Boom length | Jib length | Load radius Ft. | Load radius m | Boom angle Degrees | Jib offset 15° 2-part load hoist line Pounds | 2-part load hoist line kilograms | 1-part load hoist line Pounds | 1-part load hoist line kilograms |
|---|---|---|---|---|---|---|---|---|
| 130' (39.62 m) | 50' (15.24 m) | 90 | 27.43 | 65.0 | 14,000 | 6 350 | 14,700 | 6 668 |
| | | 100 | 30.48 | 61.2 | 12,900 | 5 851 | 14,000 | 6 350 |
| | | 110 | 33.53 | 57.4 | 12,000 | 5 443 | 13,000 | 5 897 |
| | | 120 | 36.58 | 53.3 | 11,300 | 5 126 | 12,100 | 5 489 |
| | | 130 | 39.62 | 48.9 | 10,600 | 4 808 | 11,400 | 5 171 |
| | | 140 | 42.67 | 44.2 | 10,100 | 4 581 | 10,800 | 4 899 |
| | | 150 | 45.72 | 39.0 | 9,600 | 4 355 | 10,200 | 4 627 |
| | | 160 | 48.77 | 33.0 | 9,300 | 4 218 | 9,800 | 4 445 |
| | | 170 | 51.82 | 25.6 | 9,000 | 4 082 | 9,500 | 4 309 |
| | 70' (21.34 m) | 60 | 18.29 | 78.4 | 13,400 | 6 078 | 14,700 | 6 668 |
| | | 70 | 21.34 | 75.4 | 12,000 | 5 443 | 13,100 | 5 942 |
| | | 80 | 24.38 | 72.3 | 10,900 | 4 944 | 11,800 | 5 352 |
| | | 90 | 27.43 | 69.1 | 9,900 | 4 491 | 10,700 | 4 854 |
| | | 100 | 30.48 | 65.9 | 9,100 | 4 128 | 9,800 | 4 445 |
| | | 110 | 33.53 | 62.5 | 8,400 | 3 810 | 9,100 | 4 128 |
| | | 120 | 36.58 | 59.1 | 7,900 | 3 583 | 8,400 | 3 810 |
| | | 130 | 39.62 | 55.4 | 7,400 | 3 357 | 7,900 | 3 583 |
| | | 140 | 42.67 | 51.6 | 6,900 | 3 130 | 7,400 | 3 357 |
| | | 150 | 45.72 | 47.5 | 6,500 | 2 948 | 7,000 | 3 175 |
| | | 160 | 48.77 | 43.1 | 6,200 | 2 812 | 6,600 | 2 994 |
| | | 170 | 51.82 | 38.1 | 6,000 | 2 722 | 6,300 | 2 858 |
| | | 180 | 54.86 | 32.4 | 5,700 | 2 586 | 6,100 | 2 767 |
| | | 190 | 57.91 | 25.3 | 5,600 | 2 540 | 5,900 | 2 676 |
| 140' (42.67 m) | 30' (9.14 m) | 40 | 12.19 | 79.9 | 29,500 | 13 381 | 14,700 | 6 668 |
| | | 50 | 15.24 | 76.4 | 29,500 | 13 381 | ↑ | ↑ |
| | | 60 | 18.29 | 72.8 | 29,500 | 13 381 | | |
| | | 70 | 21.34 | 69.2 | 27,300 | 12 383 | | |
| | | 80 | 24.38 | 65.6 | 24,900 | 11 295 | | |
| | | 90 | 27.43 | 61.6 | 22,900 | 10 387 | | |
| | | 100 | 30.48 | 57.6 | 21,300 | 9 662 | | |
| | | 110 | 33.53 | 53.4 | 19,900 | 9 027 | | |
| | | 120 | 36.58 | 48.9 | 18,700 | 8 482 | | |
| | | 130 | 39.62 | 44.1 | 17,700 | 8 029 | | |
| | | 140 | 42.67 | 38.8 | 16,900 | 7 666 | | |
| | | 150 | 45.72 | 32.6 | 16,300 | 7 394 | ↓ | ↓ |
| | | 160 | 48.77 | 25.1 | 15,800 | 7 167 | 14,700 | 6 668 |
| | 50' (15.24 m) | 50 | 15.24 | 79.4 | 21,400 | 9 707 | 14,700 | 6 668 |
| | | 60 | 18.29 | 76.2 | 19,100 | 8 664 | ↑ | ↑ |
| | | 70 | 21.34 | 73.0 | 17,200 | 7 802 | | |
| | | 80 | 24.38 | 69.8 | 15,700 | 7 122 | ↓ | ↓ |
| | | 90 | 27.43 | 66.4 | 14,400 | 6 532 | 14,700 | 6 668 |
| | | 100 | 30.48 | 63.0 | 13,300 | 6 033 | 14,500 | 6 577 |
| | | 110 | 33.53 | 59.4 | 12,400 | 5 625 | 13,400 | 6 078 |
| | | 120 | 36.58 | 55.6 | 11,700 | 5 307 | 12,600 | 5 715 |
| | | 130 | 39.62 | 51.7 | 11,000 | 4 990 | 11,800 | 5 352 |
| | | 140 | 42.67 | 47.5 | 10,400 | 4 717 | 11,200 | 5 080 |
| | | 150 | 45.72 | 42.9 | 9,900 | 4 491 | 10,600 | 4 808 |
| | | 160 | 48.77 | 37.8 | 9,500 | 4 309 | 10,100 | 4 581 |
| | | 170 | 51.82 | 32.0 | 9,200 | 4 173 | 9,700 | 4 400 |
| | | 180 | 54.86 | 24.8 | 9,000 | 4 082 | 9,500 | 4 309 |
| | 70' (21.34 m) | 60 | 18.29 | 79.0 | 13,700 | 6 214 | 14,700 | 6 668 |
| | | 70 | 21.34 | 76.1 | 12,300 | 5 579 | 13,400 | 6 078 |

(continued)

Refer to Notes page 5.

# TG-1900 jib capacities

| Boom length | Jib length | Load radius Ft. | Load radius m | Boom angle Degrees | Jib offset 15° 2-part load hoist line Pounds | 2-part load hoist line kilograms | 1-part load hoist line Pounds | 1-part load hoist line kilograms |
|---|---|---|---|---|---|---|---|---|
| 140′ (42.67 m) | 70′ (21.34 m) | 80 | 24.38 | 73.2 | 11,100 | 5 035 | 12,100 | 5 489 |
| | | 90 | 27.43 | 70.2 | 10,200 | 4 627 | 11,100 | 5 035 |
| | | 100 | 30.48 | 67.2 | 9,400 | 4 264 | 10,200 | 4 627 |
| | | 110 | 33.53 | 64.0 | 8,700 | 3 946 | 9,400 | 4 264 |
| | | 120 | 36.58 | 60.8 | 8,100 | 3 674 | 8,700 | 3 946 |
| | | 130 | 39.62 | 57.4 | 7,600 | 3 447 | 8,200 | 3 720 |
| | | 140 | 42.67 | 53.9 | 7,100 | 3 221 | 7,700 | 3 493 |
| | | 150 | 45.72 | 50.2 | 6,800 | 3 084 | 7,200 | 3 266 |
| | | 160 | 48.77 | 46.2 | 6,400 | 2 903 | 6,900 | 3 130 |
| | | 170 | 51.82 | 41.9 | 6,100 | 2 767 | 6,500 | 2 948 |
| | | 180 | 54.86 | 37.0 | 5,900 | 2 676 | 6,300 | 2 858 |
| | | 190 | 57.91 | 31.5 | 5,700 | 2 586 | 6,000 | 2 722 |
| | | 200 | 60.96 | 24.6 | 5,600 | 2 540 | 5,900 | 2 676 |
| 150′ (45.72 m) | 30′ (9.14 m) | 40 | 12.19 | 80.4 | 29,500 | 13 381 | 14,700 | 6 668 |
| | | 50 | 15.24 | 77.2 | 29,500 | 13 381 | ↑ | ↑ |
| | | 60 | 18.29 | 73.8 | 29,500 | 13 381 | | |
| | | 70 | 21.34 | 70.4 | 28,200 | 12 792 | | |
| | | 80 | 24.38 | 67.0 | 25,800 | 11 703 | | |
| | | 90 | 27.43 | 63.4 | 23,800 | 10 796 | | |
| | | 100 | 30.48 | 59.7 | 22,100 | 10 025 | | |
| | | 110 | 33.53 | 55.8 | 20,600 | 9 344 | | |
| | | 120 | 36.58 | 51.8 | 19,400 | 8 800 | | |
| | | 130 | 39.62 | 47.4 | 18,400 | 8 346 | | |
| | | 140 | 42.67 | 42.7 | 17,500 | 7 938 | | |
| | | 150 | 45.72 | 37.6 | 16,700 | 7 575 | | |
| | | 160 | 48.77 | 31.6 | 16,200 | 7 348 | | |
| | | 170 | 51.82 | 24.3 | 15,700 | 7 122 | 14,700 | 6 668 |
| | 50′ (15.24 m) | 50 | 15.24 | 79.9 | 21,800 | 9 888 | 14,700 | 6 668 |
| | | 60 | 18.29 | 76.9 | 19,500 | 8 845 | ↑ | ↑ |
| | | 70 | 21.34 | 73.9 | 17,700 | 8 029 | | |
| | | 80 | 24.38 | 70.8 | 16,100 | 7 303 | | |
| | | 90 | 27.43 | 67.7 | 14,900 | 6 759 | | |
| | | 100 | 30.48 | 64.5 | 13,800 | 6 260 | 14,700 | 6 668 |
| | | 110 | 33.53 | 61.1 | 12,800 | 5 806 | 13,900 | 6 305 |
| | | 120 | 36.58 | 57.6 | 12,000 | 5 443 | 13,000 | 5 897 |
| | | 130 | 39.62 | 54.0 | 11,400 | 5 171 | 12,200 | 5 534 |
| | | 140 | 42.67 | 50.2 | 10,800 | 4 899 | 11,500 | 5 216 |
| | | 150 | 45.72 | 46.1 | 10,200 | 4 627 | 11,000 | 4 990 |
| | | 160 | 48.77 | 41.7 | 9,800 | 4 445 | 10,500 | 4 763 |
| | | 170 | 51.82 | 36.8 | 9,400 | 4 264 | 10,000 | 4 536 |
| | | 180 | 54.86 | 31.1 | 9,100 | 4 128 | 9,700 | 4 400 |
| | | 190 | 57.91 | 24.1 | 9,000 | 4 082 | 9,500 | 4 309 |
| | 70′ (21.34 m) | 60 | 18.29 | 79.5 | 15,000 | 6 804 | 14,700 | 6 668 |
| | | 70 | 21.34 | 76.8 | 12,600 | 5 715 | 13,700 | 6 214 |
| | | 80 | 24.38 | 74.0 | 11,400 | 5 171 | 12,500 | 5 670 |
| | | 90 | 27.43 | 71.2 | 10,500 | 4 763 | 11,400 | 5 171 |
| | | 100 | 30.48 | 68.3 | 9,700 | 4 400 | 10,500 | 4 763 |
| | | 110 | 33.53 | 65.4 | 9,000 | 4 082 | 9,700 | 4 400 |
| | | 120 | 36.58 | 62.3 | 8,400 | 3 810 | 9,000 | 4 082 |
| | | 130 | 39.62 | 59.2 | 7,800 | 3 538 | 8,400 | 3 810 |
| | | 140 | 42.67 | 55.9 | 7,400 | 3 357 | 7,900 | 3 583 |
| | | 150 | 45.72 | 52.5 | 7,000 | 3 175 | 7,500 | 3 402 |
| | | 160 | 48.77 | 48.8 | 6,600 | 2 994 | 7,100 | 3 221 |
| | | 170 | 51.82 | 45.0 | 6,300 | 2 858 | 6,800 | 3 084 |
| | | 180 | 54.86 | 40.7 | 6,100 | 2 767 | 6,500 | 2 948 |
| | | 190 | 57.91 | 36.1 | 5,800 | 2 631 | 6,200 | 2 812 |
| | | 200 | 60.96 | 30.6 | 5,700 | 2 586 | 6,000 | 2 722 |
| | | 210 | 64.01 | 23.9 | 5,600 | 2 540 | 5,900 | 2 676 |

| Boom length | Jib length | Load radius Ft. | Load radius m | Boom angle Degrees | Jib offset 15° 2-part load hoist line Pounds | 2-part load hoist line kilograms | 1-part load hoist line Pounds | 1-part load hoist line kilograms |
|---|---|---|---|---|---|---|---|---|
| 160′ (48.77 m) | 30′ (9.14 m) | 50 | 15.24 | 77.9 | 29,500 | 13 381 | 14,700 | 6 668 |
| | | 60 | 18.29 | 74.7 | 29,500 | 13 381 | ↑ | ↑ |
| | | 70 | 21.34 | 71.5 | 29,100 | 13 120 | | |
| | | 80 | 24.38 | 68.3 | 26,600 | 12 066 | | |
| | | 90 | 27.43 | 64.9 | 24,500 | 11 113 | | |
| | | 100 | 30.48 | 61.5 | 22,800 | 10 342 | | |
| | | 110 | 33.53 | 57.9 | 21,300 | 9 662 | | |
| | | 120 | 36.58 | 54.2 | 20,100 | 9 117 | | |
| | | 130 | 39.62 | 50.2 | 19,000 | 8 618 | | |
| | | 140 | 42.67 | 46.0 | 18,100 | 8 210 | | |
| | | 150 | 45.72 | 41.5 | 17,300 | 7 847 | | |
| | | 160 | 48.77 | 36.5 | 16,600 | 7 530 | | |
| | | 170 | 51.82 | 30.7 | 16,100 | 7 303 | | |
| | | 180 | 54.86 | 23.6 | 15,700 | 7 122 | 14,700 | 6 668 |
| | 50′ (15.24 m) | 50 | 15.24 | 80.4 | 22,300 | 10 115 | 14,700 | 6 668 |
| | | 60 | 18.29 | 77.6 | 20,000 | 9 072 | ↑ | ↑ |
| | | 70 | 21.34 | 74.7 | 18,100 | 8 210 | | |
| | | 80 | 24.38 | 71.8 | 16,600 | 7 530 | | |
| | | 90 | 27.43 | 68.8 | 15,300 | 6 940 | | |
| | | 100 | 30.48 | 65.8 | 14,200 | 6 441 | 14,700 | 6 668 |
| | | 110 | 33.53 | 62.7 | 13,200 | 5 988 | 14,400 | 6 532 |
| | | 120 | 36.58 | 59.4 | 12,400 | 5 625 | 13,400 | 6 078 |
| | | 130 | 39.62 | 56.1 | 11,700 | 5 307 | 12,600 | 5 715 |
| | | 140 | 42.67 | 52.5 | 11,100 | 5 035 | 11,900 | 5 398 |
| | | 150 | 45.72 | 48.8 | 10,600 | 4 808 | 11,300 | 5 126 |
| | | 160 | 48.77 | 44.9 | 10,100 | 4 581 | 10,800 | 4 899 |
| | | 170 | 51.82 | 40.6 | 9,700 | 4 400 | 10,300 | 4 672 |
| | | 180 | 54.86 | 35.8 | 9,400 | 4 264 | 10,000 | 4 536 |
| | | 190 | 57.91 | 30.3 | 9,100 | 4 128 | 9,600 | 4 355 |
| | | 200 | 60.96 | 23.4 | 8,900 | 4 037 | 9,400 | 4 264 |
| | 70′ (21.34 m) | 60 | 18.29 | 80.0 | 14,200 | 6 441 | 14,700 | 6 668 |
| | | 70 | 21.34 | 77.4 | 12,800 | 5 806 | 14,100 | 6 396 |
| | | 80 | 24.38 | 74.7 | 11,700 | 5 307 | 12,800 | 5 806 |
| | | 90 | 27.43 | 72.1 | 10,700 | 4 854 | 11,700 | 5 307 |
| | | 100 | 30.48 | 69.3 | 9,900 | 4 491 | 10,800 | 4 899 |
| | | 110 | 33.53 | 66.5 | 9,200 | 4 173 | 10,000 | 4 536 |
| | | 120 | 36.58 | 63.7 | 8,600 | 3 901 | 9,300 | 4 218 |
| | | 130 | 39.62 | 60.7 | 8,100 | 3 674 | 8,700 | 3 946 |
| | | 140 | 42.67 | 57.7 | 7,600 | 3 447 | 8,200 | 3 720 |
| | | 150 | 45.72 | 54.5 | 7,200 | 3 266 | 7,700 | 3 493 |
| | | 160 | 48.77 | 51.1 | 6,800 | 3 084 | 7,300 | 3 311 |
| | | 170 | 51.82 | 47.6 | 6,500 | 2 948 | 7,000 | 3 175 |
| | | 180 | 54.86 | 43.8 | 6,200 | 2 812 | 6,700 | 3 039 |
| | | 190 | 57.91 | 39.7 | 6,000 | 2 722 | 6,400 | 2 903 |
| | | 200 | 60.96 | 35.1 | 5,800 | 2 631 | 6,200 | 2 812 |
| | | 210 | 64.01 | 29.8 | 5,600 | 2 540 | 6,000 | 2 721 |
| | | 220 | 67.06 | 23.2 | 5,600 | 2 540 | 5,800 | 2 631 |
| 170′ (51.82 m) | 30′ (9.14 m) | 50 | 15.24 | 78.5 | 29,400 | 13 336 | 14,700 | 6 668 |
| | | 60 | 18.29 | 75.5 | 29,400 | 13 336 | ↑ | ↑ |
| | | 70 | 21.34 | 72.5 | 29,400 | 13 336 | | |
| | | 80 | 24.38 | 69.4 | 27,400 | 12 428 | | |
| | | 90 | 27.43 | 66.3 | 25,300 | 11 476 | | |
| | | 100 | 30.48 | 63.1 | 23,500 | 10 660 | | |
| | | 110 | 33.53 | 59.7 | 22,000 | 9 979 | | |
| | | 120 | 36.58 | 56.3 | 20,700 | 9 390 | | |
| | | 130 | 39.62 | 52.6 | 19,600 | 8 891 | | |
| | | 140 | 42.67 | 48.8 | 18,600 | 8 437 | | |
| | | 150 | 45.72 | 44.8 | 17,800 | 8 074 | 14,700 | 6 668 |

(continued)

Refer to Notes page 5.

# TG-1900 jib capacities

| Boom length | Jib length | Load radius Ft. | Load radius m | Boom angle Degrees | Jib offset 15° 2-part load hoist line Pounds | 2-part load hoist line kilograms | 1-part load hoist line Pounds | 1-part load hoist line kilograms |
|---|---|---|---|---|---|---|---|---|
| 170' (51.82 m) | 30' (9.14 m) | 160 | 48.77 | 40.4 | 17,100 | 7 757 | 14,700 | 6 668 |
| | | 170 | 51.82 | 35.5 | 16,500 | 7 484 | ↑ | ↑ |
| | | 180 | 54.86 | 29.9 | 16,000 | 7 258 | ↓ | ↓ |
| | | 190 | 57.91 | 22.9 | 15,700 | 7 122 | 14,700 | 6 668 |
| | 50' (15.24 m) | 60 | 18.29 | 78.2 | 20,400 | 9 253 | 14,700 | 6 668 |
| | | 70 | 21.34 | 75.5 | 18,500 | 8 392 | ↑ | ↑ |
| | | 80 | 24.38 | 72.7 | 17,000 | 7 711 | | |
| | | 90 | 27.43 | 69.9 | 15,700 | 7 122 | | |
| | | 100 | 30.48 | 67.0 | 14,600 | 6 623 | ↓ | ↓ |
| | | 110 | 33.53 | 64.1 | 13,600 | 6 169 | 14,700 | 6 668 |
| | | 120 | 36.58 | 61.0 | 12,800 | 5 806 | 13,900 | 6 305 |
| | | 130 | 39.62 | 57.9 | 12,000 | 5 443 | 13,000 | 5 897 |
| | | 140 | 42.67 | 54.6 | 11,400 | 5 171 | 12,300 | 5 579 |
| | | 150 | 45.72 | 51.2 | 10,900 | 4 944 | 11,700 | 5 307 |
| | | 160 | 48.77 | 47.6 | 10,400 | 4 717 | 11,100 | 5 035 |
| | | 170 | 51.82 | 43.7 | 10,000 | 4 536 | 10,700 | 4 854 |
| | | 180 | 54.86 | 39.5 | 9,600 | 4 355 | 10,200 | 4 627 |
| | | 190 | 57.91 | 34.8 | 9,300 | 4 218 | 9,900 | 4 491 |
| | | 200 | 60.96 | 29.5 | 9,100 | 4 128 | 9,600 | 4 355 |
| | | 210 | 64.01 | 22.8 | 8,900 | 4 037 | 9,400 | 4 264 |
| | 70' (21.34 m) | 60 | 18.29 | 80.4 | 14,400 | 6 532 | 14,600 | 6 623 |
| | | 70 | 21.34 | 77.9 | 13,100 | 5 942 | 14,400 | 6 532 |
| | | 80 | 24.38 | 75.4 | 11,900 | 5 398 | 13,100 | 5 942 |
| | | 90 | 27 43 | 72.9 | 11,000 | 4 990 | 12,000 | 5 443 |
| | | 100 | 30.48 | 70.3 | 10,100 | 4 581 | 11,100 | 5 035 |
| | | 110 | 33.53 | 67.6 | 9,400 | 4 264 | 10,300 | 4 672 |
| | | 120 | 36.58 | 64.9 | 8,800 | 3 992 | 9,600 | 4 355 |
| | | 130 | 39.62 | 62.1 | 8,300 | 3 765 | 9,000 | 4 082 |
| | | 140 | 42.67 | 59.2 | 7,800 | 3 538 | 8,400 | 3 810 |
| | | 150 | 45.72 | 56.3 | 7,400 | 3 357 | 8,000 | 3 629 |
| | | 160 | 48.77 | 53.2 | 7,000 | 3 175 | 7,600 | 3 447 |
| | | 170 | 51.82 | 49.9 | 6,700 | 3 039 | 7,200 | 3 266 |
| | | 180 | 54.86 | 46.5 | 6,400 | 2 903 | 6,900 | 3 130 |
| | | 190 | 57.91 | 42.8 | 6,100 | 2 767 | 6,600 | 2 994 |
| | | 200 | 60.96 | 38.7 | 5,900 | 2 676 | 6,300 | 2 858 |
| | | 210 | 64.01 | 34.3 | 5,700 | 2 586 | 6,100 | 2 767 |
| | | 220 | 67.06 | 29.1 | 5,600 | 2 540 | 5,900 | 2 676 |
| | | 230 | 70.10 | 22.6 | 5,500 | 2 495 | 5,800 | 2 631 |
| 180' (54.86 m) | 30' (9.14 m) | 50 | 15.24 | 79.0 | 29,400 | 13 336 | 14,700 | 6 668 |
| | | 60 | 18.29 | 76.2 | 29,400 | 13 336 | ↑ | ↑ |
| | | 70 | 21.34 | 73.4 | 29,400 | 13 336 | | |
| | | 80 | 24.38 | 70.5 | 28,200 | 12 792 | | |
| | | 90 | 27.43 | 67.5 | 26,000 | 11 793 | | |
| | | 100 | 30.48 | 64.5 | 24,200 | 10 977 | | |
| | | 110 | 33.53 | 61.3 | 22,700 | 10 297 | | |
| | | 120 | 36.58 | 58.1 | 21,400 | 9 707 | | |
| | | 130 | 39.62 | 54.8 | 20,200 | 9 163 | | |
| | | 140 | 42.67 | 51.2 | 19,200 | 8 709 | | |
| | | 150 | 45.72 | 47.5 | 18,300 | 8 301 | | |
| | | 160 | 48.77 | 43.6 | 17,600 | 7 983 | | |
| | | 170 | 51.82 | 39.3 | 16,900 | 7 666 | | |
| | | 180 | 54.86 | 34.5 | 16,400 | 7 439 | | |
| | | 190 | 57.91 | 29.1 | 15,900 | 7 212 | ↓ | ↓ |
| | | 200 | 60.96 | 22.3 | 14,600 | 6 623 | 14,700 | 6 668 |
| | 50' (15.24 m) | 60 | 18.29 | 78.7 | 20,800 | 9 435 | 14,600 | 6 623 |
| | | 70 | 21.34 | 76.1 | 18,900 | 8 573 | ↑ | ↑ |
| | | 80 | 24.38 | 73.5 | 17,400 | 7 893 | ↓ | ↓ |
| | | 90 | 27.43 | 70.8 | 16,000 | 7 258 | 14,600 | 6 623 |

| Boom length | Jib length | Load radius Ft. | Load radius m | Boom angle Degrees | Jib offset 15° 2-part load hoist line Pounds | 2-part load hoist line kilograms | 1-part load hoist line Pounds | 1-part load hoist line kilograms |
|---|---|---|---|---|---|---|---|---|
| 180' (54.86 m) | 50' (15.24 m) | 100 | 30.48 | 68.1 | 14,900 | 6 759 | 14,600 | 6 623 |
| | | 110 | 33.53 | 65.3 | 14,000 | 6 350 | 14,600 | 6 623 |
| | | 120 | 36.58 | 62.4 | 13,100 | 5 942 | 14,300 | 6 486 |
| | | 130 | 39.62 | 59.5 | 12,400 | 5 625 | 13,400 | 6 078 |
| | | 140 | 42.67 | 56.4 | 11,700 | 5 307 | 12,700 | 5 761 |
| | | 150 | 45.72 | 53.3 | 11,200 | 5 080 | 12,000 | 5 443 |
| | | 160 | 48.77 | 49.9 | 10,700 | 4 854 | 11,500 | 5 216 |
| | | 170 | 51.82 | 46.4 | 10,200 | 4 627 | 11,000 | 4 990 |
| | | 180 | 54.86 | 42.6 | 9,800 | 4 445 | 10,500 | 4 763 |
| | | 190 | 57.91 | 38.5 | 9,500 | 4 309 | 10,200 | 4 627 |
| | | 200 | 60.96 | 34.0 | 9,200 | 4 173 | 9,800 | 4 445 |
| | | 210 | 64.01 | 28.7 | 9,000 | 4 082 | 9,600 | 4 355 |
| | | 220 | 67.06 | 22.2 | 8,900 | 4 037 | 9,400 | 4 264 |
| | 70' (21.34 m) | 60 | 18.29 | 80.8 | 14,600 | 6 623 | 14,600 | 6 623 |
| | | 70 | 21.34 | 78.4 | 13,300 | 6 033 | 14,600 | 6 623 |
| | | 80 | 24.38 | 76.0 | 12,200 | 5 534 | 13,300 | 6 033 |
| | | 90 | 27.43 | 73.6 | 11,200 | 5 080 | 12,300 | 5 579 |
| | | 100 | 30.48 | 71.1 | 10,400 | 4 717 | 11,300 | 5 126 |
| | | 110 | 33.53 | 68.6 | 9,700 | 4 400 | 10,500 | 4 763 |
| | | 120 | 36.58 | 66.0 | 9,000 | 4 082 | 9,800 | 4 445 |
| | | 130 | 39.62 | 63.4 | 8,500 | 3 856 | 9,200 | 4 173 |
| | | 140 | 42.67 | 60.7 | 8,000 | 3 629 | 8,700 | 3 946 |
| | | 150 | 45.72 | 57.9 | 7,600 | 3 447 | 8,200 | 3 720 |
| | | 160 | 48.77 | 55.0 | 7,200 | 3 266 | 7,800 | 3 538 |
| | | 170 | 51.82 | 51.9 | 6,900 | 3 130 | 7,400 | 3 357 |
| | | 180 | 54.86 | 48.8 | 6,600 | 2 994 | 7,100 | 3 221 |
| | | 190 | 57.91 | 45.4 | 6,300 | 2 858 | 6,800 | 3 084 |
| | | 200 | 60.96 | 41.8 | 6,100 | 2 767 | 6,500 | 2 948 |
| | | 210 | 64.01 | 37.9 | 5,900 | 2 676 | 6,300 | 2 858 |
| | | 220 | 67.06 | 33.5 | 5,700 | 2 586 | 6,100 | 2 767 |
| | | 230 | 70.10 | 28.4 | 5,600 | 2 540 | 5,900 | 2 676 |
| | | 240 | 73.15 | 22.1 | 5,500 | 2 495 | 5,800 | 2 631 |
| 190' (57.91 m) | 30' (9.14 m) | 50 | 15.24 | 79.6 | 29,400 | 13 336 | 14,700 | 6 668 |
| | | 60 | 18.29 | 76.9 | 29,400 | 13 336 | ↑ | ↑ |
| | | 70 | 21.34 | 74.2 | 29,400 | 13 336 | | |
| | | 80 | 24.38 | 71.4 | 28,900 | 13 109 | | |
| | | 90 | 27 43 | 68.6 | 26,800 | 12 156 | | |
| | | 100 | 30.48 | 65.7 | 24,900 | 11 294 | | |
| | | 110 | 33.53 | 62.8 | 23,400 | 10 614 | | |
| | | 120 | 36.58 | 59.7 | 22,000 | 9 979 | | |
| | | 130 | 39.62 | 56.6 | 20,800 | 9 435 | | |
| | | 140 | 42.67 | 53.4 | 19,800 | 8 981 | | |
| | | 150 | 45.72 | 49.9 | 18,900 | 8 573 | | |
| | | 160 | 48.77 | 46.3 | 18,100 | 8 210 | | |
| | | 170 | 51.82 | 42.5 | 17,400 | 7 893 | | |
| | | 180 | 54.86 | 38.3 | 16,800 | 7 620 | | |
| | | 190 | 57.91 | 33.7 | 16,300 | 7 394 | | |
| | | 200 | 60.96 | 28.3 | 14,800 | 6 713 | ↓ | ↓ |
| | | 210 | 64.01 | 21.8 | 11,500 | 5 216 | 14,700 | 6 668 |
| | 50' (15.24 m) | 60 | 18.29 | 79.2 | 21,100 | 9 571 | 14,600 | 6 623 |
| | | 70 | 21.34 | 76.7 | 19,300 | 8 754 | ↑ | ↑ |
| | | 80 | 24.38 | 74.2 | 17,700 | 8 029 | | |
| | | 90 | 27.43 | 71.7 | 16,400 | 7 438 | | |
| | | 100 | 30.48 | 69.1 | 15,300 | 6 940 | | |
| | | 110 | 33.53 | 66.4 | 14,300 | 6 486 | ↓ | ↓ |
| | | 120 | 36.58 | 63.7 | 13,500 | 6 124 | 14,600 | 6 623 |
| | | 130 | 39.62 | 60.9 | 12,700 | 5 761 | 13,800 | 6 260 |
| | | 140 | 42.67 | 58.1 | 12,000 | 5 443 | 13,100 | 5 942 |

(continued)

Refer to Notes page 5.

# TG-1900 jib capacities

| Boom length | Jib length | Load radius Ft. | Load radius m | Boom angle Degrees | Jib offset 15° 2-part load hoist line Pounds | 2-part load hoist line kilograms | 1-part load hoist line Pounds | 1-part load hoist line kilograms |
|---|---|---|---|---|---|---|---|---|
| 190′ (57.91 m) | 50′ (15.24 m) | 150 | 45.72 | 55.1 | 11,500 | 5 216 | 12,400 | 5 625 |
| | | 160 | 48.77 | 52.0 | 10,900 | 4 944 | 11,800 | 5 352 |
| | | 170 | 51.82 | 48.8 | 10,500 | 4 763 | 11,300 | 5 126 |
| | | 180 | 54.86 | 45.3 | 10,100 | 4 581 | 10,800 | 4 899 |
| | | 190 | 57.91 | 41.6 | 9,700 | 4 400 | 10,400 | 4 717 |
| | | 200 | 60.96 | 37.6 | 9,400 | 4 264 | 10,100 | 4 581 |
| | | 210 | 64.01 | 33.2 | 9,200 | 4 173 | 9,800 | 4 445 |
| | | 220 | 67.06 | 28.0 | 9,000 | 4 082 | 9,500 | 4 309 |
| | | 230 | 70.10 | 21.7 | 8,900 | 4 037 | 9,400 | 4 264 |
| | 70′ (21.34 m) | 70 | 21.34 | 78.9 | 13,500 | 6 124 | 14,600 | 6 623 |
| | | 80 | 24.38 | 76.6 | 12,400 | 5 625 | 13,600 | 6 169 |
| | | 90 | 27.43 | 74.3 | 11,400 | 5 171 | 12,500 | 5 670 |
| | | 100 | 30.48 | 71.9 | 10,600 | 4 808 | 11,600 | 5 262 |
| | | 110 | 33.53 | 69.5 | 9,900 | 4 491 | 10,800 | 4 899 |
| | | 120 | 36.58 | 67.0 | 9,200 | 4 173 | 10,100 | 4 581 |
| | | 130 | 39.62 | 64.5 | 8,700 | 3 946 | 9,500 | 4 309 |
| | | 140 | 42.67 | 61.9 | 8,200 | 3 720 | 8,900 | 4 037 |
| | | 150 | 45.72 | 59.3 | 7,800 | 3 538 | 8,400 | 3 810 |
| | | 160 | 48.77 | 56.6 | 7,400 | 3 357 | 8,000 | 3 629 |
| | | 170 | 51.82 | 53.7 | 7,000 | 3 175 | 7,600 | 3 447 |
| | | 180 | 54.86 | 50.8 | 6,700 | 3 039 | 7,300 | 3 311 |
| | | 190 | 57.91 | 47.7 | 6,400 | 2 903 | 7,000 | 3 175 |
| | | 200 | 60.96 | 44.4 | 6,200 | 2 812 | 6,700 | 3 039 |
| | | 210 | 64.01 | 40.9 | 6,000 | 2 722 | 6,400 | 2 903 |
| | | 220 | 67.06 | 37.0 | 5,800 | 2 631 | 6,200 | 2 812 |
| | | 230 | 70.10 | 32.7 | 5,700 | 2 586 | 6,000 | 2 721 |
| | | 240 | 73.15 | 27.8 | 5,600 | 2 540 | 5,900 | 2 676 |
| | | 250 | 76.20 | 21.6 | 5,500 | 2 495 | 5,800 | 2 631 |
| 200′ (60.96 m) | 30′ (9.14 m) | 50 | 15.24 | 80.0 | 29,300 | 13 290 | 14,600 | 6 623 |
| | | 60 | 18.29 | 77.5 | ↑ | ↑ | ↑ | ↑ |
| | | 70 | 21.34 | 74.9 | ↓ | ↓ | ↓ | ↓ |
| | | 80 | 24.38 | 72.2 | 29,300 | 13 290 | ↑ | ↑ |
| | | 90 | 27.43 | 69.6 | 27,400 | 12 429 | ↓ | ↓ |
| | | 100 | 30.48 | 66.9 | 25,600 | 11 612 | | |
| | | 110 | 33.53 | 64.1 | 24,000 | 10 886 | | |
| | | 120 | 36.58 | 61.2 | 22,600 | 10 251 | | |
| | | 130 | 39.62 | 58.3 | 21,400 | 9 707 | | |
| | | 140 | 42.67 | 55.2 | 20,300 | 9 208 | | |
| | | 150 | 45.72 | 52.1 | 19,400 | 8 800 | | |
| | | 160 | 48.77 | 48.7 | 18,600 | 8 437 | | |
| | | 170 | 51.82 | 45.2 | 17,800 | 8 074 | | |
| | | 180 | 54.86 | 41.5 | 17,200 | 7 802 | | |
| | | 190 | 57.91 | 37.4 | 16,700 | 7 575 | 14,600 | 6 623 |

| Boom length | Jib length | Load radius Ft. | Load radius m | Boom angle Degrees | Jib offset 15° 2-part load hoist line Pounds | 2-part load hoist line kilograms | 1-part load hoist line Pounds | 1-part load hoist line kilograms |
|---|---|---|---|---|---|---|---|---|
| 200′ (60.96 m) | 30′ (9.14 m) | 200 | 60.96 | 32.9 | 14,400 | 6 532 | 14,600 | 6 623 |
| | | 210 | 64.01 | 27.7 | 11,700 | 5 307 | 12,900 | 5 851 |
| | | 220 | 67.06 | 21.2 | 8,700 | 3 946 | 9,600 | 4 355 |
| | 50′ (15.24 m) | 60 | 18.29 | 79.6 | 21,500 | 9 752 | 14,600 | 6 623 |
| | | 70 | 21.34 | 77.3 | 19,600 | 8 891 | ↑ | ↑ |
| | | 80 | 24.38 | 74.9 | 18,100 | 8 210 | ↕ | ↕ |
| | | 90 | 27.43 | 72.4 | 16,800 | 7 620 | ↕ | ↕ |
| | | 100 | 30.48 | 70.0 | 15,600 | 7 076 | ↕ | ↕ |
| | | 110 | 33.53 | 67.4 | 14,600 | 6 623 | ↓ | ↓ |
| | | 120 | 36.58 | 64.9 | 13,800 | 6 260 | 14,600 | 6 623 |
| | | 130 | 39.62 | 62.2 | 13,000 | 5 897 | 14,200 | 6 441 |
| | | 140 | 42.67 | 59.5 | 12,300 | 5 579 | 13,400 | 6 078 |
| | | 150 | 45.72 | 56.7 | 11,700 | 5 307 | 12,700 | 5 761 |
| | | 160 | 48.77 | 53.8 | 11,200 | 5 080 | 12,100 | 5 489 |
| | | 170 | 51.82 | 50.8 | 10,700 | 4 854 | 11,600 | 5 262 |
| | | 180 | 54.86 | 47.7 | 10,300 | 4 672 | 11,100 | 5 035 |
| | | 190 | 57.91 | 44.3 | 10,000 | 4 536 | 10,700 | 4 854 |
| | | 200 | 60.96 | 40.7 | 9,600 | 4 355 | 10,300 | 4 672 |
| | | 210 | 64.01 | 36.8 | 9,400 | 4 264 | 10,000 | 4 536 |
| | | 220 | 67.06 | 32.4 | 9,100 | 4 128 | 9,700 | 4 400 |
| | | 230 | 70.10 | 27.4 | 9,000 | 4 082 | 9,500 | 4 309 |
| | | 240 | 73.15 | 21.1 | 7,300 | 3 311 | 8,000 | 3 629 |
| | 70′ (21.34 m) | 70 | 21.34 | 79.3 | 13,700 | 6 214 | 14,600 | 6 623 |
| | | 80 | 24.38 | 77.1 | 12,600 | 5 715 | 13,900 | 6 305 |
| | | 90 | 27.43 | 74.9 | 11,600 | 5 262 | 12,800 | 5 806 |
| | | 100 | 30.48 | 72.6 | 10,800 | 4 899 | 11,800 | 5 352 |
| | | 110 | 33.53 | 70.3 | 10,100 | 4 581 | 11,000 | 4 990 |
| | | 120 | 36.58 | 68.0 | 9,400 | 4 264 | 10,300 | 4 672 |
| | | 130 | 39.62 | 65.6 | 8,900 | 4 037 | 9,700 | 4 400 |
| | | 140 | 42.67 | 63.1 | 8,400 | 3 810 | 9,100 | 4 128 |
| | | 150 | 45.72 | 60.6 | 7,900 | 3 583 | 8,600 | 3 901 |
| | | 160 | 48.77 | 58.0 | 7,600 | 3 447 | 8,200 | 3 720 |
| | | 170 | 51.82 | 55.4 | 7,200 | 3 266 | 7,800 | 3 538 |
| | | 180 | 54.86 | 52.6 | 6,900 | 3 130 | 7,500 | 3 402 |
| | | 190 | 57.91 | 49.7 | 6,600 | 2 994 | 7,100 | 3 221 |
| | | 200 | 60.96 | 46.7 | 6,300 | 2 858 | 6,900 | 3 130 |
| | | 210 | 64.01 | 43.4 | 6,100 | 2 767 | 6,600 | 2 994 |
| | | 220 | 67.06 | 40.0 | 5,900 | 2 676 | 6,400 | 2 903 |
| | | 230 | 70.10 | 36.2 | 5,800 | 2 631 | 6,200 | 2 812 |
| | | 240 | 73.15 | 32.0 | 5,600 | 2 540 | 6,000 | 2 722 |
| | | 250 | 76.20 | 27.2 | 5,500 | 2 495 | 5,900 | 2 676 |
| | | 260 | 79.25 | 21.1 | 5,500 | 2 495 | 5,800 | 2 631 |

Refer to Notes page 5.

## Notes — jib capacities

1. Loads shown are maximum permissible and in all cases are limited by strength capabilities of the machine. Proper design of the substructure to withstand the loadings imposed by the machine shall be the responsibility of the purchaser. A deduction must be made from these capacities for the weight of the load handling equipment such as the hook block, hook, slings, grapple, load weighing devices, etc.
2. The operator must make the following considerations when operating the crane:
   a. Make certain the actual load radius is not greater than the radius specified on the capacity chart for the load to be lifted. The load radius is measured from the center of the tower's base section to the center of gravity of the freely suspended load. The operator must make allowances for increases in the load radius caused by stretching of the boom suspension and deflection of the boom and tower.
   b. Prevent shock or impact loading of the crane's structure especially when operating during low temperatures.
   c. Effect of wind, especially on loads with large surface areas.
3. Do not lift a load with the main hoist and a load with the auxiliary hoist at the same time.
4. For each 10 feet boom foot height above the lowest hook position, the following deductions must be made from these capacities:
   30 lbs. *(13.61 kg)* when using 2 parts of auxiliary hoist line
   20 lbs. *(9.07 m)* when using 1 part of auxiliary hoist line
5. If the 30" *(.076 m)* x 36" *(.091 m)* jib is attached to the boom, the following deductions must be made from the main hoist lifting capacities:

| Jib Length | Deduction |
|---|---|
| 30' *(9.14 m)* | — |
| 50' *(15.24 m)* | 2500 lbs. *(1 134 kg)* |
| 70' *(21.34 m)* | 4000 lbs. *(1 814 kg)* |

6. These capacities are based on a 30 mph *(48 km/h)* wind in the operating condition. Consult the manufacturer for operating limitations when winds exceed 30 mph *(48 km/h)*.
7. For the nonoperating condition, the machine, reeving, and hook blocks must clear any obstacles with the boom stowed at its specified position. This precaution is necessary due to the weathervane rotation of the crane by the wind.
8. These capacities apply only to the machine as originally manufactured and normally equipped by FMC Corporation, Cable Crane and Excavator Division.

### TOWER MOUNTED WITH CLIMBING FRAME

1. The maximum free standing tower height with a climbing frame and 170' *(51.82 m)* boom is 162'-7½" *(49.56 m)*. For tower heights greater than 162' 7½" *(49.56 m)*, consult manufacturer for additional requirements for the crane.
2. When the crane is in the nonoperating condition, the boom must be stowed as listed in the following chart based on tower height:

| Tower Height | Boom Position |
|---|---|
| 80'-160' *(24.38-48.77 m)* | Stow boom at maximum rated radius |
| 170' *(51.80 m)* | Stow boom at horizontal position |

### TOWER MOUNTED WITH CLIMBING FRAME

1. The maximum free standing tower height without a climbing frame and with 200' *(60.96 m)* boom is 162' 7½" *(49.56 m)*. For tower heights greater than 162' 7½" *(49.56 m)*, consult manufacturer for additional requirements for the crane.
2. When the crane is in the nonoperating condition, the boom must be stowed as listed in the following chart based on tower height:

| Tower Height | Boom Position |
|---|---|
| 80'-160' *(24.38-48.77 m)* | Stow boom between a 60° boom angle and maximum rated radius |
| 170'-190' *(51.82 m-57.91 m)* | Stow boom at maximum rated radius |
| 200' *(60.96 m)* | Stow boom at horizontal position |

### RAIL MOUNTED WITH TRAVELING BASE

1. Lifting capacities shown are not more than 66% of the tipping loads calculated under static conditions with the boom in the least stable direction. The operator must take into account the dynamic effects of hoisting, lowering, booming, swinging, and traveling. Additional factors to be considered are freely suspended loads, track, wind, ground conditions, boom length, and proper operating speeds for the existing conditions.
2. The operator must make certain the actual load radius is not greater than the radius specified on the capacity chart for the load to be lifted. The load radius is measured from the center of the traveling base to the center of gravity of the freely suspended load. The operator must make allowances for increases in the load radius caused by stretching of the boom suspension and deflection of the boom and traveling base.
3. For these lifting capacities, the operator must make certain that all specified ballast is properly assembled to the traveling base. Ballast may be necessary to meet the stability requirement as specified on the working areas and ballast requirement plate.
4. Use caution when approaching the rail stops with the crane bumpers. Excessive speed at contact may result in crane instability and/or failure of the rail stops.
5. When the crane is in the nonoperating condition, the rail mounted traveling base must be secured with rail clamps or tie downs to prevent drifting.

Refer to Notes below.

We are constantly improving our products and therefore reserve the right to change designs and specifications.

FMC

**FMC Corporation**

Cable Crane & Excavator Division
1201 Sixth Street Southwest
P.O. Box 2108
Cedar Rapids Iowa 52406

Link-Belt® cranes & excavators
manufactured in: Cedar Rapids Iowa
Lexington & Bowling Green Kentucky
Ontario Canada • Milan Italy
Queretaro Mexico & Nagoya Japan (under license)

Attachment B

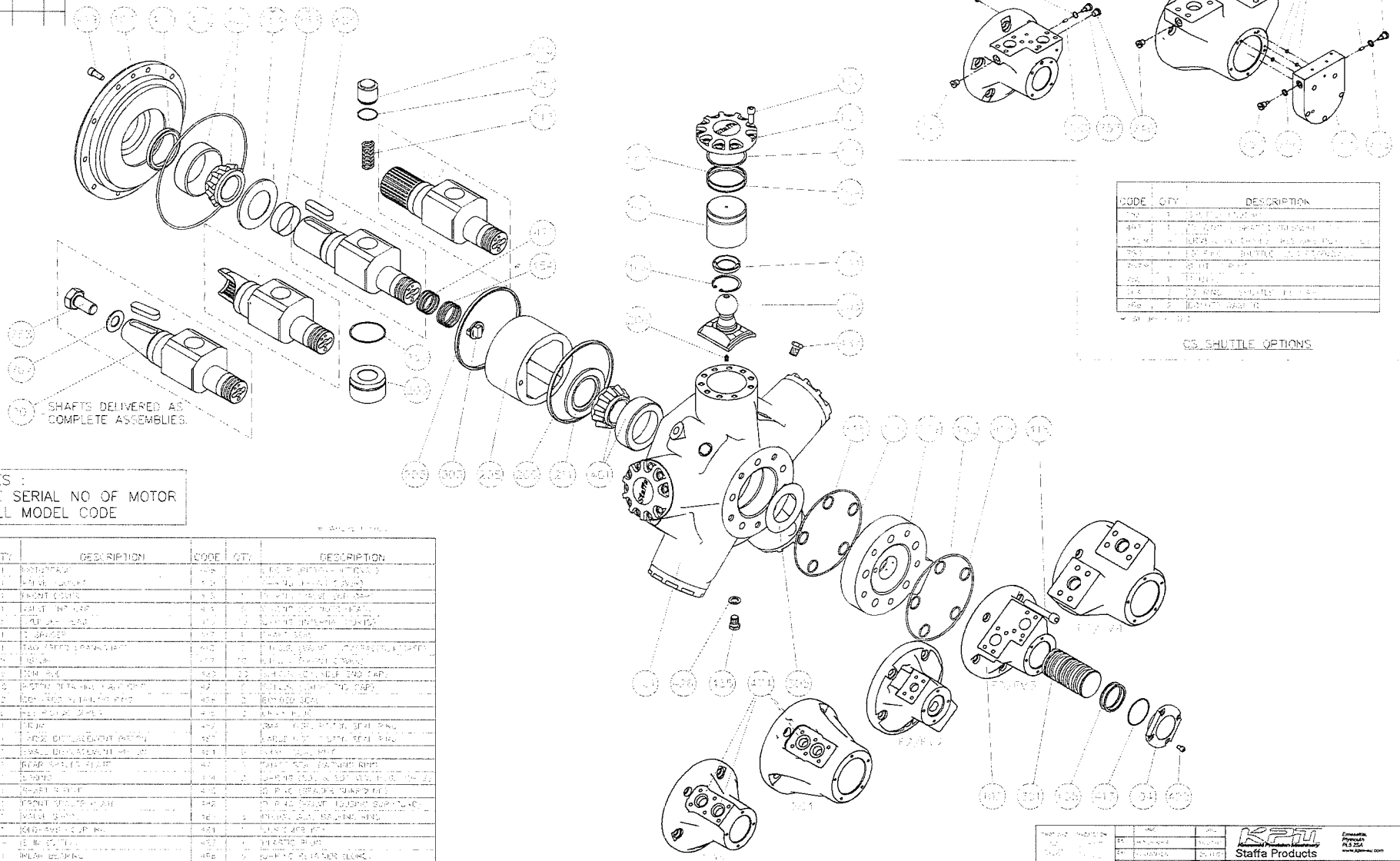


| CODE | QTY | DESCRIPTION |
|---|---|---|
| [illegible] | [illegible] | [illegible] |
| [illegible] | [illegible] | [illegible] |
| [illegible] | [illegible] | [illegible] |
| [illegible] | [illegible] | [illegible] |
| [illegible] | [illegible] | [illegible] |
| [illegible] | [illegible] | [illegible] |
| [illegible] | [illegible] | [illegible] |

CS SHUTTLE OPTIONS

SPARES :
QUOTE SERIAL NO OF MOTOR
+ FULL MODEL CODE

| CODE | QTY | DESCRIPTION | CODE | QTY | DESCRIPTION |
|---|---|---|---|---|---|
| [illegible] | [illegible] | [illegible] | [illegible] | [illegible] | [illegible] |
| [illegible] | [illegible] | [illegible] | [illegible] | [illegible] | [illegible] |
| [illegible] | [illegible] | [illegible] | [illegible] | [illegible] | [illegible] |
| [illegible] | [illegible] | [illegible] | [illegible] | [illegible] | [illegible] |
| [illegible] | [illegible] | [illegible] | [illegible] | [illegible] | [illegible] |
| [illegible] | [illegible] | [illegible] | [illegible] | [illegible] | [illegible] |
| [illegible] | [illegible] | [illegible] | [illegible] | [illegible] | [illegible] |
| [illegible] | [illegible] | [illegible] | [illegible] | [illegible] | [illegible] |
| [illegible] | [illegible] | [illegible] | [illegible] | [illegible] | [illegible] |
| [illegible] | [illegible] | [illegible] | [illegible] | [illegible] | [illegible] |
| [illegible] | [illegible] | [illegible] | [illegible] | [illegible] | [illegible] |
| [illegible] | [illegible] | [illegible] | [illegible] | [illegible] | [illegible] |
| [illegible] | [illegible] | [illegible] | [illegible] | [illegible] | [illegible] |
| [illegible] | [illegible] | [illegible] | [illegible] | [illegible] | [illegible] |
| [illegible] | [illegible] | [illegible] | [illegible] | [illegible] | [illegible] |
| [illegible] | [illegible] | [illegible] | [illegible] | [illegible] | [illegible] |
| [illegible] | [illegible] | [illegible] | [illegible] | [illegible] | [illegible] |
| [illegible] | [illegible] | [illegible] | [illegible] | [illegible] | [illegible] |
| [illegible] | [illegible] | [illegible] | [illegible] | [illegible] | [illegible] |
| [illegible] | [illegible] | [illegible] | [illegible] | [illegible] | [illegible] |
| [illegible] | [illegible] | [illegible] | [illegible] | [illegible] | [illegible] |
| [illegible] | [illegible] | [illegible] | [illegible] | [illegible] | [illegible] |
| [illegible] | [illegible] | [illegible] | [illegible] | [illegible] | [illegible] |
| [illegible] | [illegible] | [illegible] | [illegible] | [illegible] | [illegible] |
| [illegible] | [illegible] | [illegible] | [illegible] | [illegible] | [illegible] |
| [illegible] | [illegible] | [illegible] | [illegible] | [illegible] | [illegible] |

Staffa Products

Attachment C

HAAG

# THE WORLD TRADE CENTER TOWER-FOUR, LINKBELT 1900 LOST LOAD INCIDENT: A FINAL REPORT

Noah Manring, Ph.D., P.E.
Mechanical and Aerospace Engineering
University of Missouri, Columbia, MO 65211
573-884-5484, ManringN@missouri.edu

August 3, 2012

## Executive Summary

This interim report documents an engineering assessment of the lost-load incident that occurred on February 16, 2012 at the construction site of the World Trade Center, Tower-Four using a Linkbelt 1900 crane. Based upon a physical inspection of the failed parts, a numerical simulation of the crane system, and subsequent testing of the hydraulic fluid, it is concluded that this incident was caused by the seizure of a distributor in one of the Staffa motors that was used to operate the main hoist. The seizure of this distributor instantaneously reduced the load-carrying capacity of the main hoist, thus causing the load to drop to the ground in an uncontrollable fashion. It is also concluded in this report that the distributor in the Staffa motor seized due to the poor lubrication properties of the hydraulic fluid that was being used in the system that failed. Specifically, fluid testing has shown that the hydraulic fluid in the system contained 5 times the amount of water that is allowed for such systems. Furthermore, the same fluid testing indicated that there was more than 500 times the recommended number of particles per volume in the fluid that were in excess of 15 microns. This report concludes with several recommendations for remedying this problem that was experienced on this crane, and for insuring a safe work environment for the remainder of the World Trade Center construction project.

## Introduction

***Background.*** On February 16, 2012, a Linkbelt 1900 crane was being used to raise and lower loads of steel for the construction of Tower 4 of the World Trade Center. During the incident described in this report, the crane was raising a 48,125 lbf load from the ground to an upper story of construction. When the load reached the 48$^{th}$ floor of Tower 4 (or thereabouts) the crane suddenly "lost the load"; meaning, that the load dropped uncontrollably to the ground. This lost-load incident was the second of its kind. On October 28, 2011, a load had been lost while using a Favco 1500 crane to lower a 14,600 lbf load while working on the same tower of the World Trade Center [1]. These lost-load incidents have given the Port Authority of New York and New Jersey reason for investigating the events and to take corrective actions that will insure the safety of the worksite during the remainder of this project. This report is being written to describe the work that has been performed to investigate the Linkbelt 1900 crane incident, and to make recommendations for preventing future lost-load conditions of this crane.

***Descriptions.*** Figure 1 shows a labeled photograph of the crane hoist system before the hydraulic components were removed and inspected at Federated Crane on March 1, 2012. The primary features of this photograph include: a) the main hoist which is a rotary drum from which the crane cable is unwrapped for lowering a load (and wrapped for raising a load), b) the four hydraulic motors that are used to apply raising and lower torque on the main hoist, c) the cross-over relief valve "N" which keeps the high pressure side of the circuit from over pressurizing, and d) the counter balance valve which is used to hold the crane load in place in the absence of a command input from the pumps which supply flow to the motors. It should be noted that the hydraulic power unit (including the diesel engine and hydraulic pumps) is not shown in Figure 1. Other hydraulic components shown in Figure 1 are used to service the

auxiliary hoist system for the crane, which is not suspected for any fault in the lost-load incident of February 16, 2012.

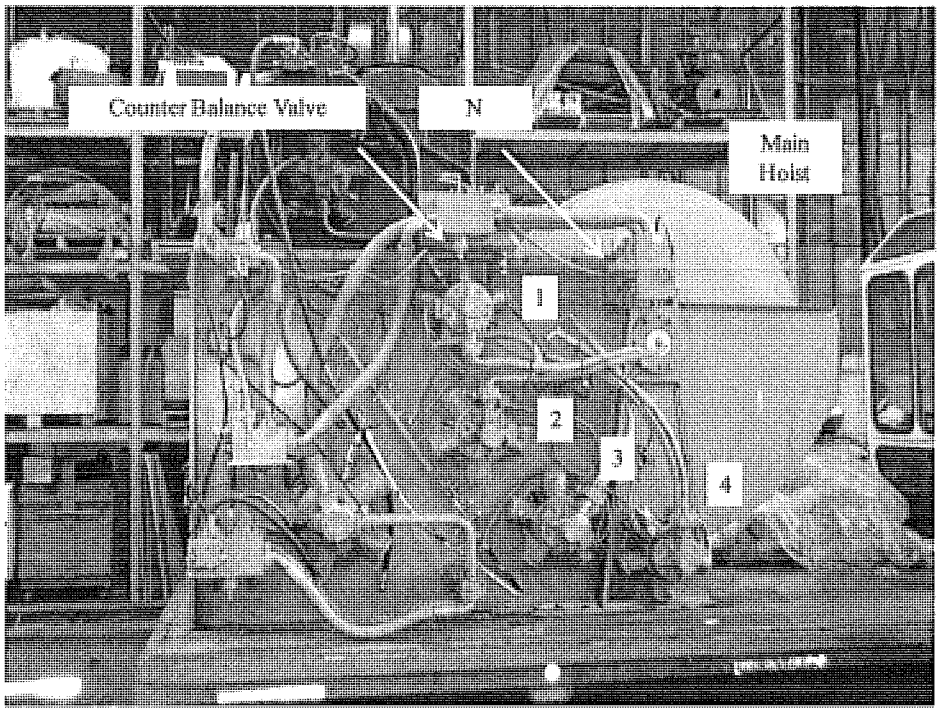


Figure 1. A photograph of the crane hoist system before the hydraulic motors 1-4 were removed and inspected at Federated Crane on March 1, 2012

Figure 2 shows a schematic for the main hoist hydraulic circuit, with the following notes identifying several components that are important for understanding the schematic:

A External charge pump

B External charge pump filter

C Bypass valve for the cooling circuit (normally open as shown)

D Gearbox driven by the engine

E Main hoist pump

F Auxiliary hoist pump, connected to the main hoist circuit during the incident

G Charge pump connected to the main hoist pump

H Charge pump connected to the auxiliary hoist pump

I Check valve

J Charge circuit relief valve

K Shuttle valve for the cooling circuit

L Orifice for the cooling circuit

M Cross over relief valve for lowering

N Cross over relief valve for raising

O Return line from the main and auxiliary pump case drain

P Return filter inside the reservoir

1 - 4 Main hoist motors

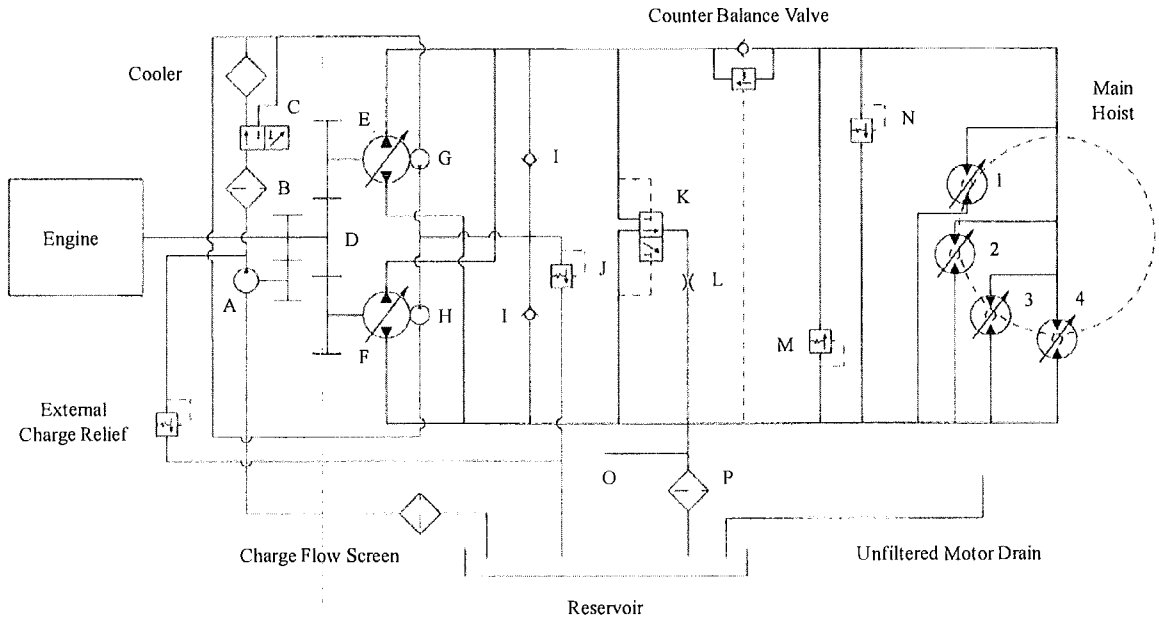


Figure 2. A schematic of the hydraulic circuit for the main hoist system

Other components of the main hoist hydraulic circuit are explicitly labeled in Figure 2. The following comments are offered to help understand the circuit shown in Figure 2:

1. The orifice for the cooling circuit labeled as L in Figure 2 is not explicitly described anywhere in the operator's manual for the Linkbelt 1900 crane. This has been included to illustrate that this must be a controlled, small amount of flow facilitated by some restriction. According the Mr. Thomas Kanzler, Chief Engineer for Federated Crane, this component is actually operated by a relief valve setting that is integral to a Sauer-Danfoss Series 20 pump.
2. The cross-over relief valves labeled as M and N are not explicitly referred to in the operator's manual. These are included in Figure 2 because they are commonly used in closed loop systems, and because Mr. Thomas Kanzler, Chief Engineer for Federated Crane, identified the valves during the inspection. The cross-over relief valve labeled N is shown in Figure 1 as well.
3. The operator's manual on page 7-7 discusses a "Motor Drain Circuit" used to provide cooling for the motors. This is commonly called "motor flushing" and is not unusual to see in closed loop systems; however, since this "circuit" is integral to each individual motor it is assumed to be represented within components 1-4 in the schematic.
4. The case flow for the motors is obviously an important concern for this design since the return flow from the motor case remains unfiltered to avoid back pressure (operator's manual, p. 7-5). The Staffa Motor literature [2] also specifies that the case pressure not exceed 50 psi.

As illustrated in this schematic, the power for the main hoist is provided by a diesel engine which drives two Sauer-Danfoss, Series 20, axial piston pumps [3]. These pumps are labeled E and F in Figure 2, and are used to convert the rotating mechanical energy from the engine into

pressured fluid that is transmitted through hydraulic lines to four Staffa motors which are provided by Kawasaki [2]. The motors are labeled 1-4 in Figure 2, and are designed to operate at low speed (c.a., 300 rpm) while transmitting large amounts of torque to the ring gear of the main hoist. The torque from each motor is additive which means that all four motors apply simultaneous effort to raise and lower a load on the crane. The hydraulic system is equipped with cross-over relief valves that are set near 3,200 psi to prevent over pressurization of the high-pressure side of the circuit. These relief valves are labeled in Figure 2 by the symbols N and M. A counter balance valve is shown on the high-pressure side of the circuit in Figure 2, and is used to hold the load in place while the pumps are operating at zero displacement. In order to raise the load, the pumps are stroked forward and fluid freely passes through the check valve of the counter balance valve, and is received by the motors which then exert torque on the ring gear of the main hoist. In order to lower the load, the pumps are stroked backward and flow is forced through the opposite side of the circuit. In this mode of operation, the check valve of the counter balance valve is held closed, while the pressure from the low-pressure side of the circuit is increased to open the relief valve of the counter balance valve. By opening this relief valve, the motors are then able to transmit flow across the counter balance valve and the crane then lowers the load. The net effect of the counter balance valve is to require pump activity for both raising and lowering the load. In other words, the counter balance valve keeps the load from lowering based on gravity alone and the load must be "powered" up and down by the pumps.

**Machine Inspection on March 1, 2012**

On March 1, 2012, the crane / hoist system shown in Figures 1 and 2 was inspected at the Federated Crane location at 1640 New Market Avenue, South Plainfield, New Jersey 07080.

Representatives from various private and government entities were onsite to witness the inspection of the machine components. The process for inspection is described in the following list of enumerated events:

1. The hydraulic motor labeled 4 in Figures 1 and 2 was disassembled first. There was an obvious interest in disassembling this motor first because the case had a large hole in it, from which a connecting rod had been thrown out of the machine during failure, along with another large piece of metal that appeared to belong to one of the hydrostatic bearings. Figure 3 shows the type of failure that was observed for Motor 4 (and the other 3 motors). The following things were observed during the disassembly process:

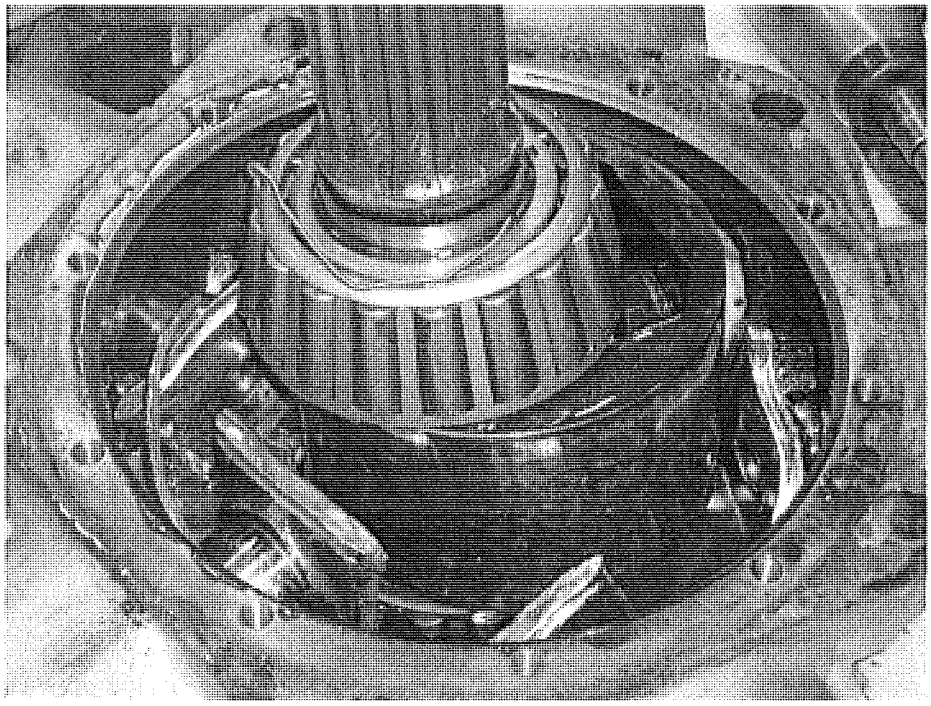

Figure 3. The typical finding of a motor failure in which metal parts were scattered randomly, conrod shoes were highly deformed, and motor pistons were either jammed or partially jammed within their bores.

a. Two jars of oil were extracted from the motor case before the motor was removed from the winch pack. These have since been analyzed and will be discussed later in this report.

b. A mechanical key (called the "Oldhams coupling" by the Staffa engineers) which is used to synchronize the shaft rotation with the distributor (port timing) of the motor was broken. The distributor, which normally rotates freely in its bore, was stuck in place and required a hydraulic press operation for its removal. As will be described later, the seizing of one of these distributors is considered to be the incipient failure that resulted in the lost-load incident.

c. Seals and o-rings for the motor appeared to be in good shape, with no unusual signs of extrusion or other deformation.

d. There were many metal parts scattered throughout the motor case ranging from long strips of material extending up to 30 cm in length to observable metal shavings less than one millimeter in size. Many small pieces of metal were found of the approximate size of a penny. Most of these metal parts appear to have come from the mangled hydrostatic thrust bearings which had been destroyed due to an apparent over-speed phenomenon.

e. The machine was designed with 5 pistons. The piston labeled number 1 was the only piston to have lost its connecting rod (called a conrod by the Staffa motor engineers). In fact, the connecting rod was found on the job site, indicating that this was the object that had most likely created the hole in the motor case. By disconnecting the connecting rod from the piston, a 5 mm lubrication passage from the pressurized side of the piston was opened up to the motor case. Initially, this was thought to be a cause for the accident; however, as it will be shown later, there was sufficient pump capacity to make up for the flow and therefore a 5 mm hole would not have been sufficient for creating the failure.

f. A few pistons could still slide in their bores a small amount. When pushed back, the bores looked clean with normal wear, indicating that a long standing problem of contamination was not responsible for the motor failure.

g. While the motor case was filled with metal shavings and broken parts of all sizes, the pressurized side of each piston had small metal shavings that were observable and had apparently found their way into the pressurized loop of the circuit.

2. The hydraulic motor labeled 3 in Figure 1 and 2 was disassembled next. The following observations were made:

   a. Two jars of oil were extracted from the motor case before the motor was removed from the winch pack. These have since been analyzed and will be discussed later in this report.

   b. This motor exhibited similar failure symptoms of Motor 4 (and typical of Figure 3); however, the connecting rods were all nominally in place, indicating that the 5 mm lubrication passages from the pressurized side of the pistons were not opened and pressure could have been held by these pistons.

   c. The motor's Oldham coupling was broken and the distributor was seized in the bore.

   d. Metal shavings, deformed hydrostatic thrust bearings, and other pummeled parts looked similar to Motor 4 (and typical of Figure 3).

3. The hydraulic motor labeled 2 in Figure 1 and 2 was disassembled next. The same comments in 2 above apply.

4. The hydraulic motor labeled 1 in Figure 1 and 2 was disassembled next. The same comments in 2 above apply.

5. The main hoist pump and charge pump labeled E and G respectively in Figure 2 was disassembled next. The following observations were made:

a. Two jars of oil were extracted from the pump case before the pump was removed from the gearbox. These have since been analyzed and will be discussed later in this report.

b. The charge pump G was in good shape and indicated no unusual wear or other failure symptoms. Joint seals indicated nothing unusual.

c. Upon disassembly of the main hoist pump E, the valve plate and barrel face looked good with other internal parts that looked essentially new. Gaskets and joint seals indicated nothing unusual.

d. There was no widespread contamination that was observable with the naked eye in this pump; however, the rotating group had one piston that had seized in its bore and a slipper had broken away from the ball-and-socket joint. The slipper had broken into at least three pieces, two large pieces were recovered within the pump case; however, these parts were not pummeled and do not appear to have created problems for the other pistons within the pump. This may indicate that the slipper failure was recent.

e. When the slipper broke from the piston, a 1 mm hole was opened up from the working side of the piston to the pump case drain. The amount of additional leakage generated from this 1 mm hole is deemed to be insignificant and is not attributed to the incipient failure associated with the lost-load incident.

f. Upon visual observation, the running surface of the broken slipper looked more scratched than the running surface of the other slippers; however, none of the scratches observed were unusual for machines of this type.

g. The seized piston was pounded out of the bore with a hammer and screw driver, and bore scoring was observed which was typical of a seized piston failure. All other piston bores looked very good and the pistons were free to slide within them.

h. The swash plate and other bearing components within the pump looked healthy and without damage.

i. There was no contamination from the motors that appeared to have made its way back into the main hoist pump E or the charge pump G.

6. The auxiliary hoist pump labeled F and H respectively in Figure 2 was disassembled next. The following observations were made:

   a. Two jars of oil were extracted from the pump case before the pump was removed from the gearbox. These have since been analyzed and will be discussed later in this report.

   b. The charge pump H was in good shape and indicated no unusual wear or other failure symptoms. Joint seals indicated nothing unusual.

   c. The auxiliary hoist pump F was in good shape and indicated no unusual wear or other failure symptoms. All internal parts looked essentially new.

   d. There was no contamination from the motors that appeared to have made its way back into the auxiliary hoist pump F or the charge pump H.

7. The external charge pump labeled A in Figure 2 was disassembled next. This pump was disassembled and indicated no failure symptoms. All parts looked in good operating condition.

8. A 5 gallon oil sample from the system reservoir was taken. This sample has since been analyzed and will be discussed later in this report; however, from visual observations the fluid appeared to contain a significant amount of water. Oil samples throughout the system were murky with a greenish tinge. Some jars of oil appeared to have a different shade of green than others.

## Failure Theories

***Preliminary Failure Theories.*** In a preliminary report [4] written on March 3, 2012, shortly after the machine inspection of March 1, 2012, six different failure theories were proposed for explaining the lost load incident. These theories were presented in the following order of preference:

1. A failure of the charge pressure relief valve J, shown in Figure 2, caused the pumps to lose control pressure and thereby reduced the system's ability to makeup leakage. The system may have been running hot, exacerbating normal leakage effects, and other leaks may have opened up due to mechanical failures (a broken conrod in Motor 4, seized piston in Pump E). This theory was favored at this point due to anecdotal statements about a loss of charge pressure being suspect for the previous lost-load incident on October 28, 2011.
2. Failure of the Pump E slipper and a stuck-open relief valve in the counter balance valve created a leak path that was too large for the system to overcome. The leakage through the counter balance valve, and subsequently through the open slipper hole caused the load to start dropping.
3. The Motor 4 connecting rod breaks creating a leak path that was too large for the system to overcome and the load began to drop. This theory left the seized piston and broken slipper in the Pump E unexplained.
4. The motor flushing system breaks creating a leak path that was too large for the system to overcome and the load began to drop. No evidence of this failure mode was discovered during the machine inspection; however, we didn't look for it either.
5. The cross over relief valve N fails (sticks open) and creates a short circuit in the hydraulic loop around the motors. This explains the over speed failure of the motors, but leaves the

seized piston in Pump E unexplained.

6. The check valves on the main hoist junction block fail creating a short circuit which would create a failure mode similar to 5 above.

***Additional Failure Theory.*** After the inspection on March 1, 2012, the preliminary report written by Thomas Kanzler [1] concerning the first lost-load incident of October 28, 2011, was made available. This report used the same Staffa motors [2] that were used in the Linkbelt 1900 crane and therefore common failure conditions between these two events were sought. As it turned out, the most common feature between these two failures was that both failures involved at least one broken Oldham coupling which synchronizes the motor shaft and the port distributor for each motor. Aside from one broken Oldham coupling, the motors on the first failure seemed to be in good shape, indicating that no secondary over speed failures had occurred. Staffa motor engineers later informed us that the Oldham coupling was designed with a safety factor in excess of 100, which means that a seized distributor must have occurred in each case of a broken coupling. <u>If a seized distributor (as indicated by a broken Oldham coupling) was responsible for the initial failure of both machines, the following question needed to be answered: "What happens to the lift circuit when a distributor seizes?"</u> To answer this question, a numerical simulation of the main hoist system was conducted using the Matlab/Simulink® software package which is capable of modeling the dynamic failure of the crane.

**Numerical Simulation**

***Modeling.*** To examine the additional failure theory presented above; i.e., that a seized distributor in one of the Staffa motors caused the lost-load incident for the Linkbelt 1900 crane, a numerical simulation of the hoist system was conducted using mathematical modeling

techniques that are well documented for hydraulic control systems [5]. This model included the supply flow that was delivered by two Sauer-Danfoss Series 20 pumps [3], and the torque generated on the ring gear of the hoist by four Staffa motors [2]. The load was modeled as a constant payload of 48,000 lbf (neglecting the weight of the lifting cables) and for simplicity the wrapped diameter of the cable around the hoist was assumed to be constant. The output for this model was designed to be: a) the fluid pressure in the high-pressure side of the circuit, b) the net torque exerted on the ring gear of the hoist, c) the rotational speed of each motor (all four motors rotate at the same speed), and d) the height of the load above the ground. All four motors were modeled with some detail, including the instantaneous torque ripple that is applied to the ring gear from each motor, and the capability of seizing a distributor in each motor was also designed into the model with the motivation of examining this effect. Figure 4 shows the graphical user interface for this model as it was implemented using Matlab/Simulink®.

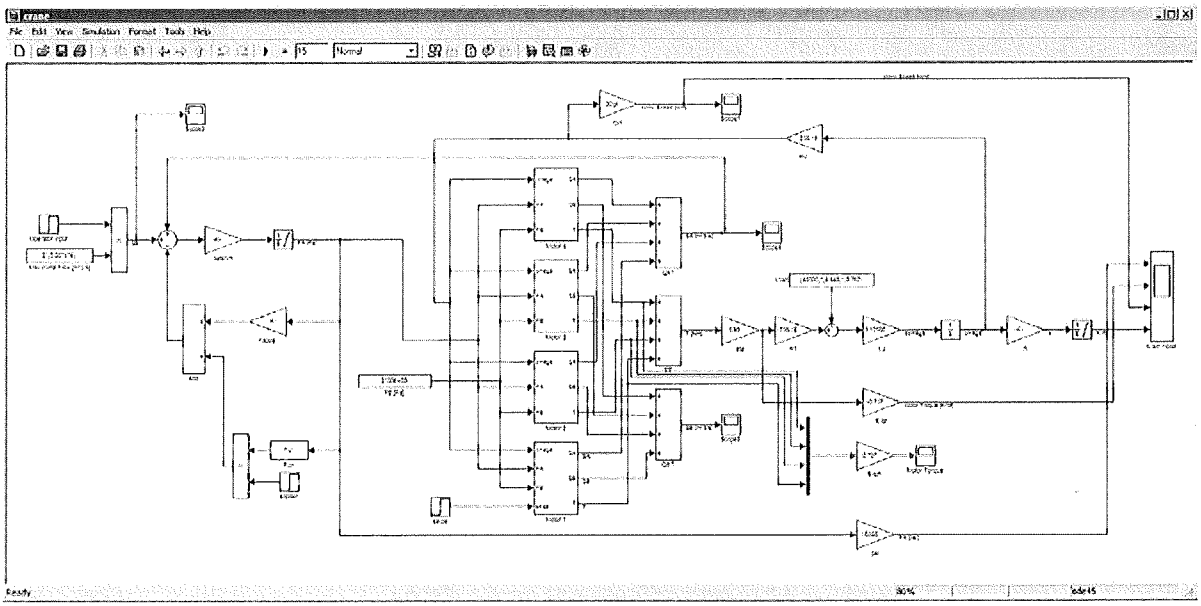

Figure 4. The graphical user interface for the numerical model that was developed in Matlab/Simulink® for simulating the condition of a seized distributor in one of the motors

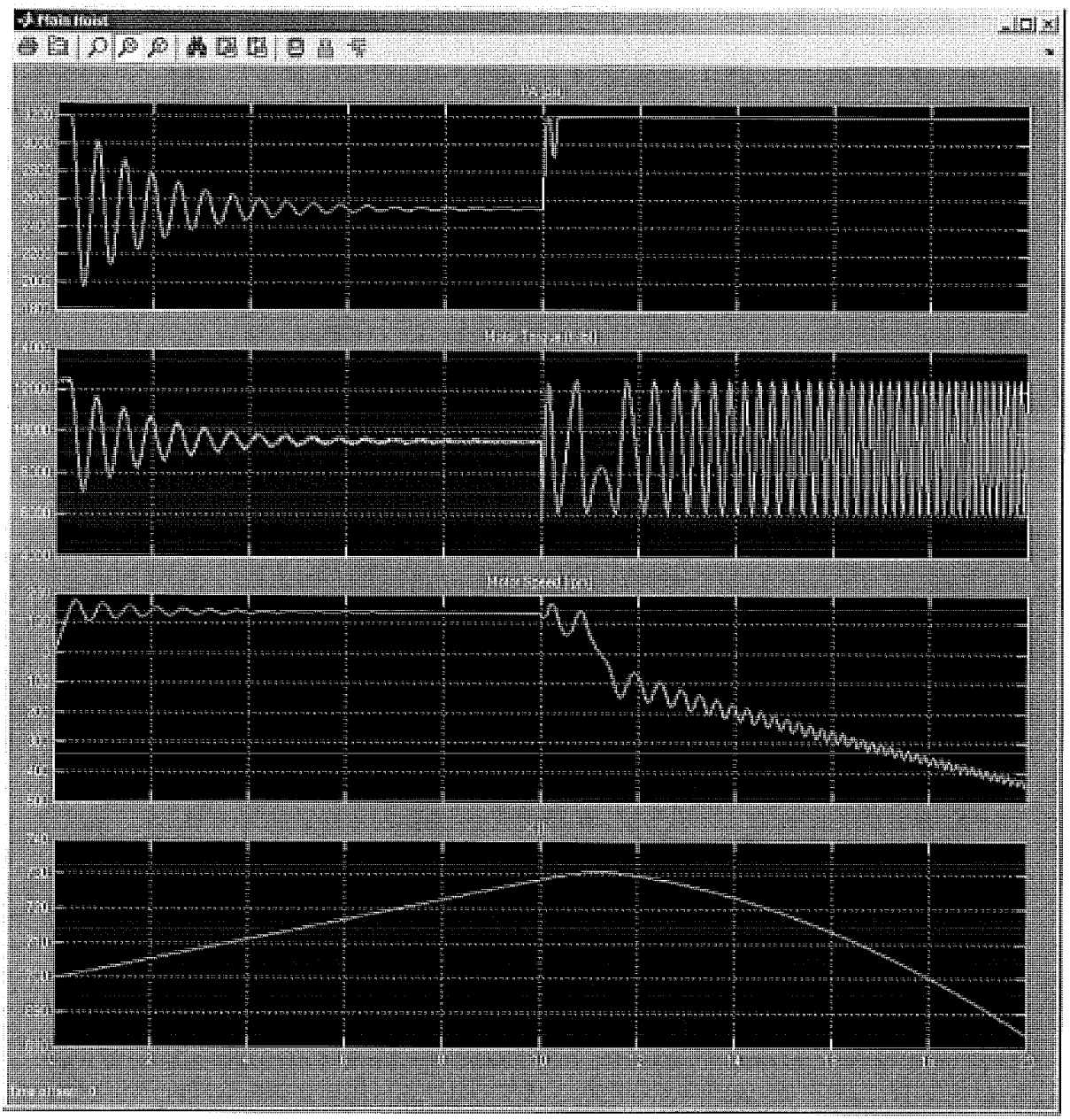

Figure 5. Simulation results for the lost-load incident of the Linkbelt 1900 crane, on February 16, 2012.

***Results and Discussion.*** To simulate the loaded condition of the failure that occurred for the Linkbelt 1900 crane on February 16, 2012, the load was assumed to be lifted from an elevation of 700 ft in the air by four Staffa motors that were in perfect working condition. After

10 seconds of operation, one of the distributors in a motor was seized (numerically), which caused the motor porting to remain fixed for this motor while the motor shaft continued to turn with the ring gear on the hoist. As shown in Figure 5, the numerical results indicate that the load began to drop in an uncontrollable manner, shortly following the seizure of the distributor. In addition, the motor speed reversed direction as the hoist began to unwrap the cable and the load began to drop. Within 10 seconds, the motors were spinning at over 400 rpm which is in excess of their rated speed. Within another 10 seconds the motors would be spinning over 800 rpm resulting in the catastrophic failure of the internal parts that were observed during the inspection on March 1, 2012 at the Federated Crane location. While the motors are operating in the reverse direction and are being driven by the ring gear of the hoist, they actually turn into a pump and try to force fluid into the high pressure side of the system. At the same time, the pumps are trying to force fluid into the same fixed volume and the net effect is to increase the pressure on this side of the circuit until the cross over relief valve (labeled N in Figures 1 and 2) opens and allows fluid to short circuit the system. Since this relief valve is set at 3,200 psi, Figure 5 shows that the pressure in the high-pressure side of the circuit saturates at this value.

So, what has caused the lost-load incident during a distributor failure of one motor? The answer is fairly simple. By seizing a distributor in one of the motors, we have effectively disabled a motor which was needed to generate the lifting capacity of 48,000 lbf for the crane. When that lifting capacity became reduced (by one fourth of what is should have been), the load dropped uncontrollably until it hit the ground. Figure 6 shows the instantaneous torque of all four motors as they exert effort on the ring gear of the hoist. The motor with a seized distributor is shown in red, and it can be seen from this figure that the instantaneous torque oscillates about the mean value of zero. In other words, the average torque effect from this motor is zero. The

oscillatory effects of this torque on the total system are also shown in the second strip chart of Figure 5. In the end, this appears to be the most plausible explanation for the lost-load incident of February 16, 2012.

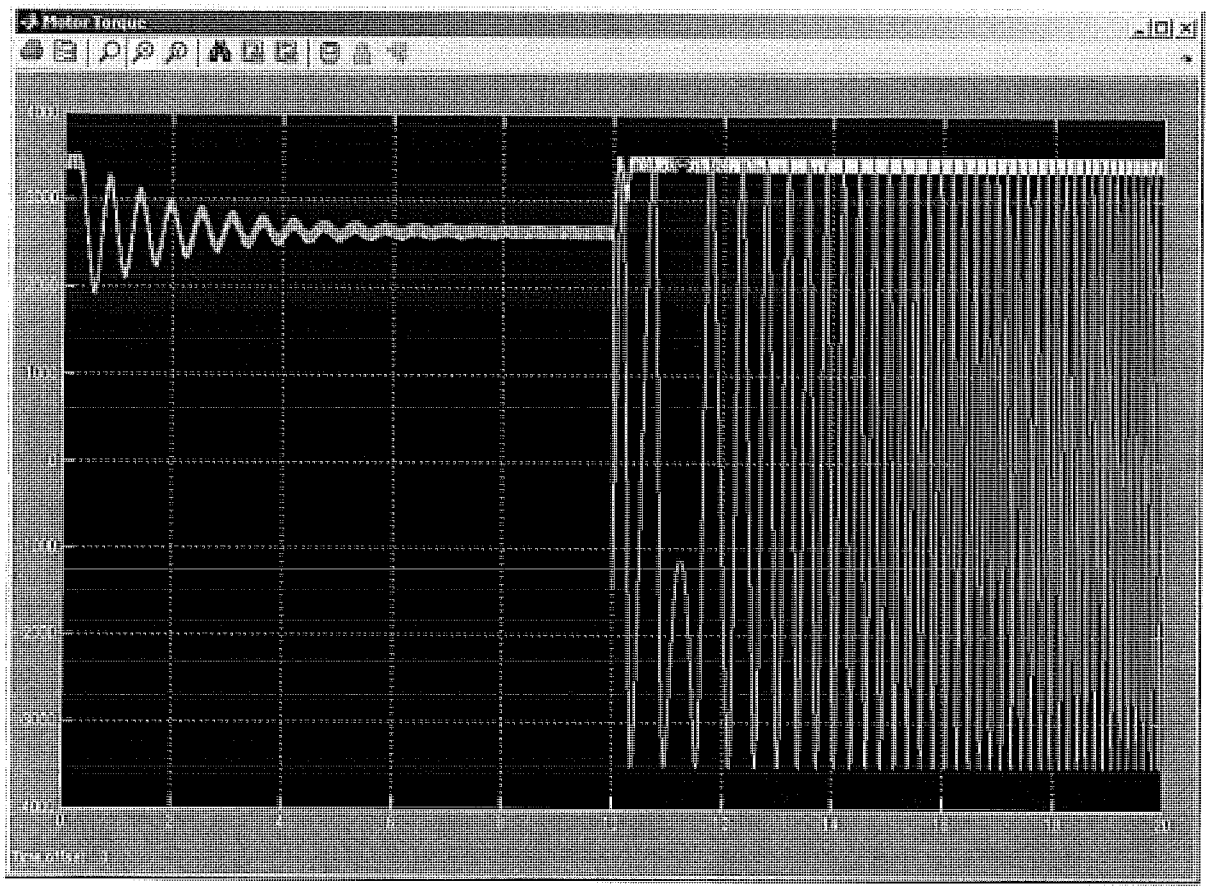


Figure 6. Instantaneous torque of all four motors being used to lift the load on the Linkbelt 1900 crane. The torque from the motor with a seized distributer is shown in red, and the average value of this torque is shown to oscillate about zero.

As noted earlier, several failure theories having to do with the inability of the pumps to keep up with leakage effects in the system were proposed. It should be mentioned that the numerical model was used to test these theories by keeping all motor distributors functioning properly, and introducing sudden leak paths into the high-pressure side of the circuit. The results

of these tests showed that a large hole in excess of a 10 mm diameter would be required to bring the load down, and even then the load would drop at a fairly slow rate. As no leak paths of that size were identified during the site inspection or in subsequent valve testing (to be discussed later), these failure theories have been ruled out and are now considered to be unlikely.

**Valve Testing**

In order to rule out the possibility of a valve malfunction as being responsible for the crane failure of February 16, 2012, the counter balance valve and the cross-over relief valve N shown in Figures 1 and 2 were removed and taken to a hydraulic test facility to examine their flow characteristics. These tests confirmed two things:

1. That the relief valve of the counter balance valve was malfunctioning in a stuck-open position where flow was allowed to freely pass in both direction, and
2. That the cross-over relief valve was functioning properly with a setting of 3,200 psi.

Although the counter balance valve was shown to be malfunctioning, it is not our current opinion that this caused the failure of the crane. The reason for this conclusion is that this malfunction would have to be coupled with another leak path failure on the pump-side of the circuit, and that this leak path would need to be characterized by a hole in excess of a 10 mm diameter. Since no leak paths of this size have been identified, it is assumed that the malfunctioning of the counter balance valve was benign in this case, and that the more probable cause of failure was a seized distributor on one of the motors. Based on the lab testing of the cross-over relief valve, the relief valve setting of 3,200 psi was used in the simulation of the hoist system presented in the previous section. Figure 5 illustrates this setting by limiting the pressure to 3,200 psi on the high-pressure side of the circuit.

## Fluid Testing

As previously noted, fluid samples were taken from various places within the hydraulic system during the inspection on March 1, 2012, at Federated Crane. These samples were sent to Analytical Testing Services, 191 Howard Street, Franklin, PA 16323, for a complete analysis of contamination particles, viscosity, and water content. Table 1 shows the salient features of this analysis that were used to make the following conclusions concerning the fluid that was taken from the hydraulic reservoir drain (ATS Lab ID 83412):

| ATS Lab ID | Description | Sampling Date | Viscosity @ 40°C | Water Content (KF) | Water Content (%) | ISO 4406 Particle Count Particle per ml of sample | | | | | | |
|---|---|---|---|---|---|---|---|---|---|---|---|---|
| | | | cSt | ppm | | 4µ | 6µ | 14µ | 21µ | 38µ | 70µ | Cleanliness Code |
| 83410 | Oil Sample Charge Filter | 3/8/2012 | 42.84 | 712 | 0.071% | 88997 | 20440 | 23 | 5 | 0 | 0 | 24/22/12 |
| 83411 | Aux Pump Case | 3/8/2012 | 42.84 | 657 | 0.066% | 88432 | 16324 | 5 | 1 | 0 | 0 | 24/21/9 |
| 83412 | Hydraulic Reservoir Drain | 3/8/2012 | 43.38 | 5476 | 0.548% | 87406 | 84122 | 55205 | 20272 | 468 | 23 | 24/24/23 |
| 83413 | Main Pump Supply | 3/8/2012 | 42.90 | 750 | 0.075% | 91100 | 32485 | 43 | 1 | 1 | 0 | 24/22/13 |
| 83414 | Motor No 1 | 3/8/2012 | 43.38 | 448 | 0.045% | 92013 | 41196 | 101 | 4 | 0 | 0 | 24/23/14 |
| 83415 | Motor No. 2 | 3/8/2012 | 43.41 | 970 | 0.097% | 88899 | 25283 | 62 | 5 | 0 | 0 | 24/22/13 |
| 83416 | Motor No, 3 | 3/8/2012 | 43.38 | 877 | 0.088% | 91286 | 37638 | 124 | 7 | 1 | 0 | 24/22/14 |
| 83417 | Motor No. 4 | 3/8/2012 | 43.44 | 1726 | 0.173% | 93631 | 47121 | 916 | 38 | 5 | 0 | 24/23/17 |
| 83418 | Main Pump Drain Case | 3/8/2012 | 42.87 | 630 | 0.063% | 88281 | 19148 | 11 | 1 | 0 | 0 | 24/21/11 |
| 83419 | Pump Drive Gear Case | 3/8/2012 | 306.40 | 1269 | 0.127% | 118883 | 106076 | 23673 | 204 | 1 | 0 | 24/24/22 |
| 83420 | Oil Main Hydraulic Tank | 3/8/2012 | 42.90 | 1215 | 0.122% | 87574 | 21359 | 27 | 2 | 0 | 0 | 24/22/12 |
| 83421 | Chevron Rando HD ISO 46 (Virgin) | 3/8/2012 | 71.78 | 57 | 0.006% | 12450 | 1768 | 17 | 2 | 0 | 0 | 21/18/11 |

Table 1. Fluid analysis performed by Analytical Testing Services on March 21, 2012

1. The <u>water content of 0.548% in this fluid is 5 to 10 times too high</u>. Current practice is to keep the water content less than 0.1% but some recommend keeping the content less than 0.05% [6]. Without any question, fluid that has a water content of 0.2% should be discarded and replaced and water content is the most important factor in fluid property degradation.
2. According to the crane Operator's Manual [7], the contamination level for the fluid is far above recommended values (off the charts) that are given in Fig 5-35, on page 5-45.
3. According to ISO 4406:1999 [8], and the Staffa motor literature [2], the class of particles per milliliter in the fluid greater than 5 microns in size should be less than 18, and the class of

particles per milliliter in the fluid great than 15 microns in size should be less than 14. From Table 1, it can be shown that the measured class for each of these particle size conditions is 24 and 23 respectively which means that the number of particles greater than 5 microns is 60 times larger than recommended, and the number of particles greater that 15 microns is 500 times larger than recommended. In other words, contamination levels in this fluid are way out of bounds.

4. The viscosity measurement is given in Table 1 by 43.38 cSt at 40C. The minimum viscosity recommended in the Staffa literature is 25 cSt. In Don Garrahan's letter of April 4, 2012, it was indicated that a AW46 hydraulic fluid was being used in the crane which exhibits a viscosity of 25 cSt at a temperature of 58C. In a conversation between Chris Hoffbeck at Kawasaki Precision Machinery (Staffa motor providers), and Don Garrahan it was affirmed that the operating temperature of the hydraulic system in this crane never exceeds 58C (137F) which means that the viscosity requirement for the Staffa motor is satisfied by using AW46 hydraulic fluid.

Based on the findings of the fluid test report, the following recommendations have been made: a) that the fluid on existing cranes be checked and monitored every 50 hours for acceptable water content and contamination levels, b) that a 5 micron filter be used for filter "B" in Figure 2 to keep the intake fluid clean, and c) that a 20 micron filter be used for filter "P" in Figure 2 to further ensure that catch contamination that may be generated within the system due to normal machine wear. Note: after the monitoring of the fluid condition has been done for several months and the fluid condition remains good and stable, it may be appropriate to reduce this monitoring activity to a 250 hour interval.

**Safety Factor Analysis**

After considering the analysis and modeling results presented in this report, and in consultation with others who have been involved with this project, it has been agreed upon that the most likely cause of failure for the Linkbelt 1900 crane is the seizure of one of the distributors in a Staffa motor. Furthermore, the extremely poor fluid conditions of this machine are most likely the cause of the seizure of the distributor and may also be used to account for the seizure of a piston in Pump E which resulted in the breakage of slipper. In response to this situation, a report has been written [9] in which it has been recommended that the payload for the Linkbelt 1900 crane be limited to 30,000 lbf until the question of motor-distributor seizure is answered. This payload limitation will provide a safety factor of nearly 1.40 for a system that loses one motor due to distributor seizure, and will provide a safety factor of nearly 1.00 for a system that loses two motors due to the same failure. Once the distributor seizure problem is resolved, and proper safety checks are put in place for future operation, the load capacity of the crane may be increased to its more standard capacity which exceeds 48,000 lbf. Note: when calculating the payload for the crane, the weight of the cables that are used for lifting the construction materials should be included in the calculation. The cable weight may be calculated as follows:

$$W_c = \frac{7\ \text{lbf}}{\text{ft}} \times L \times N \quad ,$$

where $L$ is the length in feet of one line of cable hanging downward from the height of the hoist, and $N$ is the number of cables that are being used to lift the construction materials. For example, a 700 ft lift using one cable will reduce the acceptable payload to 25,100 lbf. If two cables are used for a 700 ft lift, the acceptable payload is reduced to 20,200 lbf.

## Conclusions and Recommendations

The following conclusions and recommendations are supported by the analysis and discussion of this report:

1. That the lost-load incident on February 16, 2012, was caused by the seizure of a distributor in one of the Staffa motors.
2. That the seizure of the distributor in the one of the Staffa motors was caused by poor lubrication stemming from inadequate fluid conditions.
3. That the mode of failure identified here for the Linkbelt 1900 crane is probably the same mode of failure that caused the earlier lost-load incident for the Favco 1500 crane on October 28, 2011.

The following recommendations are offered to remedy the existing problem of distributor seizure and lost-load failures for the Linkbelt 1900 crane:

1. That until the seized distributor problem is resolved; the payload for the crane (including the weight of the lift cables) should be limited to 30,000 lbf.
2. That the hydraulic filtration system be equipped with 5 micron filters at location "B" in Figure 2, and that 20 micron filters be used at location "P" in the same figure.
3. That fluid contamination and water content levels should be checked every 50 hours of operation by sampling fluid from the hydraulic reservoir. The water content should routinely be measured at less than 0.1% and the contamination levels should be cleaner than a rating of 18/14 using the ISO 4406 standard. Fluid exceeding these levels should be discarded and replaced with new AW46 or AW68 hydraulic fluid.
4. That after at least 200 hours of regular monitoring of the hydraulic fluid (every 50 hours) which has shown acceptable water content and cleanliness ratings, the fluid monitoring

program may be reduced to a frequency of 250 hours. Again, fluid exceeding the recommended levels of water and contamination should be discarded and replaced with new AW46 or AW68 hydraulic fluid.

5. That after the 250 hour fluid-monitoring frequency is implemented based on regular and healthy fluid sampling, the reduced payload recommendation of 30,000 lbf may be relaxed and the crane may once again be used at its maximum lift capacity. Note: the monitoring of fluid should continue every 250 hours throughout the duration of the World Trade Center project.

**References**


[1] Kanzler, Thomas. December 12, 2011. Interim Report on Favco 1500 Tower Crane, CD3450, #4 World Trace Center. Federated Crane Co., LLC. 1640 New Market Avenue, South Plainfield, NJ 07080.

[2] Staffa Dual Displacement Hydraulic Motor, HMC 080. Kawasaki Motors Corp., USA Precision Machinery Division. 5080 36th Street S. E., Grand Rapids, MI 49512.

[3] Series 20 Axial Piston Pumps, Technical Information. Sauer-Danfoss (US) Company. 2800 East 13th Street, Ames, IA 50010.

[4] Manring, Noah. March 3, 2012. The World Trade Center Tower-Four, Linkbelt 1900 Lost Load Incident: Investigation of Pump and Motor Damage. University of Missouri, Columbia, MO 65211.

[5] Manring, Noah. 2005. Hydraulic Control Systems. John Wiley & Sons. New York, NY. ISBN 0-471-69311-1

[6] Radhakrishnan, M. 2003. Hydraulic Fluids: A Guide to Selection, Test Methods, and Use. American Society of Mechancial Engineering Press. New York, NY. ISBN 0-7918-0184-5.

[7] Operator's Manual: TG1500-1900-2300-2300B (unknown date). Section 7 – Hydraulic and Pneumatic Systems and Schematics. (unknown publisher).

[8] International Standard ISO 4406. 1999. Hydraulic fluid power - Fluids – Method for coding and the level of contamination by solid particles, 2nd ed.

[9] Manring, Noah. March 17, 2012. Recommendation for the Maximum Crane Payload for Cranes operating at the World Trade Center Job Site. University of Missouri, Columbia, MO 65211.

# APPENDIX

# REFERENCE 1. KANZLER REPORT

# Federated Crane Co., L.L.C.

1640 New Market Avenue, South Plainfield, NJ 07080
Engineering Office:
Phone: (585) 381-1663
Fax: (585) 381-5336
Email: tkanzler@rochester.rr.com


December 12, 2011

Port Authority of NY & NJ
115 Broadway
8th Floor
New York, NY 10006
Attn: Ms. Maureen Lynch-Jacobs

Subject: #4 World Trade Center, Favco 1500 Sliding Tower Crane (CD3450)
Main Winch Hydraulics Interim Report

Dear Ms. Lynch-Jacobs:

Regarding your request for examination and review of the subject tower crane winch system, I am pleased to offer the attached Interim Report for your consideration.

As always, if there are any questions, or if I can be of any other assistance, please do not hesitate to call.

Sincerely,

STATE OF NEW YORK
THOMAS D. KANZLER
73252
LICENSED PROFESSIONAL ENGINEER

Thomas Kanzler, P.E.
Chief Engineer

cc: M. Schiavoni
L. Shapiro

enc.

# Federated Crane Co., L.L.C.

1640 New Market Avenue, South Plainfield, NJ 07080
Engineering Office:
Phone: (585) 381-1663
Fax: (585) 381-5336
Email: tkanzler@rochester.rr.com


Interim Report
on
Favco 1500 Tower Crane
CD3450
#4 World Trade Center

Submitted to
Ms. Maureen Lynch-Jacobs
Port Authority of NY & NJ
115 Broadway
8th Floor
New York, NY 10006

December 12, 2011

by


Thomas Kanzler, PE
Federated Crane Co., L.L.C.

## Table of Contents

I. EXECUTIVE SUMMARY ..... 3
II. INTRODUCTION ..... 4
III. SYSTEM DESCRIPTION ..... 4
IV. NORMAL OPERATION ..... 7
V. SITE VISIT OBSERVATIONS ..... 9
VI. INCIDENT SEQUENCE OF EVENTS ..... 13
VII. SUMMARY AND CONCLUSIONS ..... 16
VIII. PHOTOGRAPHS ..... 17
IX. CHARGE CIRCUIT WIRING DIAGRAMS ..... 22
X. SIMPLIFIED HYDRAULIC CIRCUIT DIAGRAM ..... appendix 1
XI. STAFFA MOTOR INSPECTION REPORT ..... appendix 2

## I. Executive Summary

A Favco model 1500 tower crane using the main hoist to lower a 14,600 lb load at #4 World Trade Center experienced an event where the load accelerated and travelled downward in an uncontrolled manner approximately 100 ft before being arrested by the mechanical braking system. Hydraulic fluid was observed in large quantities in the vicinity of the hoist motors after the fact.

An examination of the hydraulic motors at a remote site, and of the hydraulic system on the subject crane at the project site, revealed deficiencies in both hydraulic system performance, and in hydraulic and electro-hydraulic components and interconnections. The noted deficiencies include a broken and bypassed hoist speed range pressure switch, improperly set main load relief valve, improperly set cooling shuttle relief valves, severe loss of charge pressure under load, and improperly connected charge pressure protection circuitry.

Hydraulic motor cavitation was the eventual result of one or more of the deficiencies noted, which is supported by the internal damage exhibited in all three motors, and is the most likely cause of the hoist failure. It was brought on by one of several possible failures in systems intended to prevent such an occurrence, in particular a worn main hoist hydrostatic pump, and a malfunctioning charge pressure switch circuit. Damage to the motors appears to be cumulative, suggesting cavitation problems probably existed for some time.

The runaway load event was initiated by ongoing motor cavitation and lack of internal lubrication, resulting in the distributor section of one motor (out of three) seizing in its bore, and shearing the drive coupling between the crankshaft and distributor. The resulting decrease in total combined motor displacement, and the complementary increase in operating pressure of the remaining two motors, contributed to the continued cavitation and resulting loss of ability of the motors to support the lifted load.

The low charge pressure safety system did not activate as designed to prevent such an occurrence by automatically setting all hoist brakes, and the load was allowed to drop in an uncontrolled manner. The load was eventually arrested when the crane operator returned the manual hoist control to its neutral position, setting the mechanical holding brakes.

This report is based on information available at the time of writing, including the final report from the manufacturer of the hoist hydraulic motors (see appendix 2), and on additional information gained through further examination and testing of the subject crane after the preliminary report was submitted on November 22, 2011, but without benefit of a detailed investigation of the main hoist hydrostatic pump beyond field testing. It is subject to revision once the pump has been examined and tested.

## II. Introduction

On October 28, 2011, a Favco 1500 working at #4 World Trade Center was lowering a 14,600 lb load using the Main Hoist and experienced an event where the load accelerated and travelled downward in an uncontrolled manner approximately 100 ft before being arrested by the mechanical braking system. Hydraulic fluid was observed in large quantities in the vicinity of the hoist motors after the fact, with no other damage reported.

This report is in response to a request by the Port Authority of New York & New Jersey to investigate and determine the root cause of the event.

## III. System Description

The subject tower crane utilizes a three drum diesel-hydrostatic winch unit, serial number 100120, but the auxiliary winch drum unit was not installed. Three Staffa HMC080 dual-displacement five-cylinder radial hydraulic motors drive the main hoist drum through open spur gears mounted to countershafts. The motors normally displace either 90 cubic inches, or 25 cubic inches, with the larger displacement being the default condition. One motor was found to be non-standard, with 90 and 45 cubic inch displacements. Three external spring-applied, pneumatically-released band brake units are mounted at the opposite end of the countershafts, and provide load holding and emergency stopping. Control of primary functions, particularly hydrostatic pump actuation and brake release, is through pneumatic actuators remotely controlled by pneumatic operator control levers.

All three hydraulic motors are plumbed into a common manifold block such that the Raise ports of the motors are connected to each other in parallel, as are the Lower ports. Motor displacement is hydraulically shifted between maximum and minimum displacement. Two motors shift together into minimum displacement for intermediate winch speed range, and the third can be shifted to minimum displacement once the first two have shifted for high speed range. Winch line pull is reduced in the two higher speed ranges.

The motors are powered by a single Sundstrand Series 27 hydrostatic pump displacing 20.36 cubic inches per revolution. It is driven by the onboard diesel engine through a multi-output pump drive gearbox at 1:1 ratio to engine speed. The pump has an integral charge pump displacing 4.0 cubic inches per revolution, also turning at engine speed.

The hoist circuit is of the closed-loop, or hydrostatic type, which operates by driving hydraulic fluid under pressure from the pump, through the motors, returning directly to the pump in a continuous fluid

column as the motors are driven. The fluid can be pumped in either direction, with a continuously variable flow rate up to its maximum in either direction, by changing the pump's internal piston drive mechanism via an external control. When the pump is not actively controlled, it centers itself and no fluid flows in the working circuit, holding the motors essentially stationary. The pump is capable of supporting a pressurized fluid column at zero flow, which translates to holding a lifted load stationary, and when flowing in a direction opposite to the pressurized fluid column, as when lowering a load.

External control of hydrostatic pumps is through a small double-acting pneumatic actuator mounted to the pump and controlled by a joystick in the operator's cabin. Except for the semi-independent control of the hoist brakes, and the hoist speed range selection, all other functions of the hydrostatic drive circuit are fully automatic, and not under the operator's direct control.

Positive control of suspended loads is provided by a counterbalance, or load holding, valve in the Raise side of the circuit. This valve provides controlled resistance to movement of the fluid column on the Raise side of the motors in the hoist down direction (lowering) to prevent flow out of the motors and back to the pump unless fluid is pumped under pressure through the other side of the circuit to positively drive the motors downward. A small pressure signal line from the Lower side of the circuit opens the Load Holding Valve in proportion to pressure in the Lower side of the valve, modulating the fluid flow and controlling the winch motion. This valve is internally bypassed in the opposite direction, and has no effect while the load is being hoisted. It acts, in essence, as a hydraulic backstop or ratchet system. There is a Fixed Restriction in the pilot (signal) line that slows the pilot fluid column to prevent erratic response of the Load Holding Valve and subsequent jerky winch operation.

A Load Relief Valve connects the two sides of the working loop immediately after the motors. Over-pressurization of the fluid column on the load (Raise) side, will bypass fluid to the non-load (Lower) side under resistance, softening an abnormally high deceleration, and reducing the risk of cavitation of the motors. The pressure setting of the Load Relief Valve is substantially higher than the greatest working pressure across the hydraulic motors, to prevent fluid bypass during normal operation and loss of control of the load.

Since the hydraulic fluid in the closed circuit will gain heat and contamination as it works, a cooling shuttle is employed to remove a portion of the fluid for cooling and filtration. The Cooling Shuttle Valve is shifted off center by pressure in the working loop, to one side or the other depending on which side has the highest pressure, which is usually the Raise side. Fluid from the low pressure side of the loop is allowed to flow through the other side of the Cooling Shuttle Valve, resisted by the Shuttle Relief Valve to maintain a minimum pressure in the low pressure side of the circuit, and delivered to the heat exchanger (not shown) and reservoir, where multiple stages of filtration (not shown) are employed to maintain fluid cleanliness. No fluid normally flows through the Cooling Shuttle Valve when the circuit is at rest, as the two sides of the working circuit after the Load Holding Valve are at the same low pressure.

Hydraulic fluid removed from the working circuit through the Cooling Shuttle Valve is replenished by the Charge Pump. When the winch motors are at rest, with equal fluid pressure in either side of the working circuit, the Charge Pump flow is returned to the Reservoir. A minimum pressure throughout the circuit is maintained by the Charge Relief Valve, which is internal to the Hydrostatic Pump. Fluid relieved through the Charge Relief Valve also serves to flush contamination from within the Hydrostatic Pump case, and to provide necessary cooling, as the pump internal components rotate constantly with the diesel engine even when the hoist is not actively working.

The other critical function of the Charge Pump is to maintain a minimum system pressure in all parts of the working circuit. As a pump or motor rotates and displaces fluid on piston extension, fluid must fill the cylinders as the other pistons retreat, which requires some relatively low pressure on the non-working side of the circuit. If the minimum pressure is not available to drive the fluid into the motors and pump, cavitation would result, potentially causing damage to the rotating group, and in the case of winch motors, potentially loss of control of the motors and lifted load.

Motor displacement changes are accomplished by tapping high pressure fluid from the load (raise) side of the circuit to shift the motors' internal displacement servo when one or both electro-hydraulic valves are shifted. These valves are controlled by the operator when selecting a winch speed range, with operation of these valves prevented when a load greater than that allowable for the selected range is detected by the Pressure Switches, commonly referred to in the field by the brand name "Barksdale". With both valves deenergized all motors are in full displacement, and the hoist is in low speed range. This is the default fail-to-safety state.

To effect displacement changes in the motors, a round eccentric on the crankshaft on which the piston slippers bear is displaced off center either a small amount when one port is pressurized, giving small displacement ('high' speed), or a large amount when the other port is pressurized ('low' speed). The amount of eccentricity determines the stroke of the hydraulic pistons in their bores, so that short stroke results in minimum displacement, and long stroke gives high displacement. Maximum and minimum displacements are determined at manufacture, and are not adjustable. Standard hoist motors for this winch have 90 cubic inches per revolution in high displacement, and 25 cubic inches per revolution in low displacement.

A substantial volume of hydraulic fluid is required to shift each motor, to either maximum or minimum displacement, therefore an Adjustable Restriction in the supply line to the valves limits the rate of change. This is to prevent an excessive momentary fluid flow rate out of the load (raise) side of the working circuit, resulting in the motors' intake ports being starved of hydraulic fluid and cavitating, particularly when running at speed.

## IV. Normal Operation

With the engine at governed speed and the operator's controls in neutral, only the Hydrostatic and Charge Pumps are rotating, along with ancillary pumps such as a climber pump, if present. If the hoist function is not active, the Charge Pump draws hydraulic fluid from the Reservoir, and dumps most of its output flow over the Charge Relief Valve into the Hydrostatic Pump case, which is returned to the Reservoir. There is a small leakage flow through all of the motors under charge pressure alone, which is intentional and normal. The Charge Pressure Switch will remain closed as long as the minimum required charge pressure of 110 psi is maintained or exceeded. Operation of the pneumatic control system is enabled. Charge pressure falling below 110 psi at any of the three Charge Pumps will disable all manual controls, set all of the hoist brakes on all winches, and light a red Charge Pressure light on the operator's console.

Since the Cooling Shuttle Valve experiences the same pressure from both sides of the working circuit, it remains centered. In that state, no fluid passes through it to the Shuttle Relief Valve. The Load Holding Valve remains closed, blocking the Raise side of the working circuit as a backup to the winch drum holding brakes. The Load Relief Valve also remains closed, blocking passage of hydraulic fluid from one side of working circuit to the other. All motors experience the same charge pressure on both working ports, generating no torque and therefore no movement. The suspended load or empty hook remains stationary and secure with the brakes applied.

As the operator moves the control lever in the Hoist (Raise) direction, the band brakes are pneumatically released, and the Hydrostatic Pump control is displaced off center such that its pistons go from zero displacement to some small displacement in the Raise direction. With even a small displacement, pressure in the working circuit becomes unbalanced, with the Raise side experiencing higher pressure than the Lower side.

If the pressure imbalance is not great enough to overcome the pressure induced in the motors by the load as the brakes are released, the Load Holding Valve will mostly prevent the load from moving downward. It will, however, creep slowly as the motors' internal leakage allows some fluid to bypass the pistons, into the motor cases, and back to the Reservoir (drain lines not shown in the diagram). The greater the supported load, the greater the bypass flow rate, and the faster the load will creep downward. The Charge Pump supplies makeup fluid to replace the fluid lost in the circuit through internal motor leakage.

As the operator displaces the control further from center, the Hydrostatic Pump stroke is increased, and the fluid column supporting the load moves faster to hoist the load. Fluid bypasses the Load Holding internally, and continues up to and through the motors, driving the load upward. Pressure in the host side of the working circuit is a function of total motor displacement and applied load torque at the motor shafts, with higher loads requiring greater circuit pressure.

While hoisting, the low pressure side of the working circuit is maintained at or above the minimum pressure required to keep the pump and/or motors supplied with fluid at their intake ports by the Charge Pump, through the back-to-back makeup Check Valves internal to the Hydrostatic Pump. Since there is, by necessity, a pressure unbalance between the two sides of the working circuit, the Cooling Shuttle Valve is deflected off center. When shifted off center, the circuit side experiencing the higher pressure remains blocked (internally in the Shuttle), but the lower pressure side passes fluid through the Shuttle and to the Shuttle Relief Valve, which maintains a minimum system pressure on that lower pressure side. Fluid taken from the low pressure side is sent to the cooling and filtering systems.

Replenishment fluid is provided as before from the Charge Pump and replenishment Check Valves internal to the Hydrostatic Pump, which allow fluid flow from the Charge Pump to whichever side of the working circuit is experiencing the lower pressure.

Load lowering is accomplished the same way, with flow directions being reversed, with the exception of the Load Holding Valve, which does not allow free passage of hydraulic fluid from the motors to the pumps without restriction. The Load Holding Valve remains closed, blocking fluid flow that would allow the load to be lowered, unless and until the pressure in the Lower side of the circuit is high enough to pilot the valve open, allowing the fluid column to pass. This piloting action assures that there is positive pressure to 'drive the load downward', and absent that pressure, the Load Holding Valve will prevent the load from descending at more than a creep speed as long as the engine is running, with the Charge Pump supplying makeup fluid for that bypassed within the motors. The control system would prevent the brakes from releasing, or apply them if already released, upon loss of charge pressure, which makes it an inherently fail-safe system.

Speed range changes are initiated when the operator selects a speed range other than 'low'. Using 'intermediate' for this example, the load is taken in 'low' speed and supported on the hydraulic system with the brakes released. If the suspended load is less than the maximum allowable for the intended higher speed range, as indicated on the Load Gauge in the operator's cab, the selector switch is turned by the operator to 'intermediate', and the load can be lifted or lowered normally in the intermediate speed range.

The hydraulic motors shift displacement when the operator control stick is moved far enough off center to cause a 25 psi or greater control pressure to the Hydrostatic Pump pneumatic actuator, but only as long as the hydrostatic working circuit pressure at the Pressure Switch (Barksdale) is not greater than the pressure setting of the Pressure Switch before the control pressure exceeds 25 psi. If the working circuit pressure is higher than the Pressure Switch setting for that speed range, it will open, preventing shifting of the hydraulic motor displacement control.

The reason the pressure in the 'low' speed range is proofed by the control system prior to and during shifting is because the displacement ratios of the hydraulic motors are approximately 2:1 when shifting from 'low' speed range to 'intermediate'. The total displacement of the three hydraulic motors in 'low' range is 270 cubic inches, and in 'intermediate' it is 140 cubic inches. The pressure required to support a given load in 'low' speed will roughly double once the two motors that shift for 'intermediate' speed are both shifted to minimum displacement (recall that the third motor remains at full displacement in the 'intermediate' speed range). The setting of the Pressure Switch Intermediate, which is part of the Barksdale unit (contains both Intermediate and High pressure switches – see block diagram) is approximately 1500 psi.

Shifting to 'high' speed range from 'intermediate' speed will similarly reduce the total motor displacement at about a 2:1 ratio, or another doubling of the hydrostatic working circuit pressure to support a given load. The Pressure Switch High is therefore set at a proportionately lower pressure of about 700 psi, preventing shifting of all three motors with a load too heavy for 'high' speed range and the resulting working circuit pressure on the Raise side.

While it is possible for the operator to improperly set the speed range selector to 'high' with a load too heavy for that speed range, the Pressure Switch High will prevent shifting of the third motor, restricting the speed to the 'intermediate' speed range. Similarly, if the load is too great for even 'intermediate' speed range, both Pressure Switches will open, preventing activation of either of the two Shift Valves, leaving all three motors in full displacement, or 'low' speed range.

## V. Site Visit Observations

Thursday, November 17, 2011
Powertech Motion Control, Inc. facility

In the aftermath of the reported runaway load incident, all three hydraulic motors were sent to Powertech Motion Control, Inc. in Mahwah, NJ for dismantlement and inspection. Mr. Chris Hoffbeck, Engineering Supervisor for Kawasaki Precision Machinery (USA) Inc., makers of the Staffa product line, was brought in to examine the motors and render an opinion on the cause of failure.

Discussions with Mr. Hoffbeck at the Powertech facility lead to the conclusion that the motors were over-sped, starved of hydraulic fluid, or both. Discoloration of the bores of the distributor units across all three motors suggests repeated events of over-speed operation and/or fluid starvation. Galling of the distributors and matching bores was probably caused by this fluid starvation, leading eventually to the seizure of the distributor in one of the motors when the Oldham coupling connecting it to, and synchronizing it with, the crankshaft of the motor was sheared off due to excessive torque load in the distributor.

According to reports from the field, and verified when it was disassembled, one of the motors had blown its main shaft seal and spilled a substantial amount of hydraulic fluid. This was almost certainly caused when the motor experienced a great enough fluid starvation (partial vacuum) event to draw the internal sealing O-rings out of their grooves, allowing high pressure hydraulic fluid to bypass them once pressure was restored (as described below), putting system pressure at potentially high flow rates into the motor case, and in turn blowing the main shaft seal.

Mr. Hoffbeck's report is attached (appendix 2).

Friday, November 18, 2011
Favco 1500 crane, #4 World Trade Center

A visual inspection was performed of the subject crane, with emphasis on the Main Hoist hydrostatic system and related components. Hydraulic pressures were checked at numerous locations, functionality of various safety systems was checked, and load history data was downloaded from the Markload Mariner safe load indicator system.

Machinery

A detailed inspection of the machinery was not performed, but a cursory inspection did not indicate any obvious deficiencies. The open spur gear teeth driving the main load drum did not show obvious signs of excessive wear, nor was there any obvious indication of countershaft bearing movement or misalignment. Brakes had covers in place, and air lines appeared to be in good condition.

Hydraulic motors were replaced after the incident in order to raise the load hook to its out-of-service position, and were therefore assumed to be in new or like-new condition. Countershaft couplings should have been visually inspected at the time the motors were replaced (by others), but could not be checked without removing the motors.

As the mechanical equipment was not originally suspected as a cause of the event, further investigation was not indicated.

Hydraulic System

Many new or recent vintage hydraulic hoses were in evidence, including main working circuit hoses. Manifolds, valves, junction blocks and in-line devices appeared to be in good condition. No obvious damage from rigging devices or human abuse was observed. Hydraulic fluid leakage was observed to be no more in evidence than normally expected with any diesel-hydraulic power unit that has been in service. No fluid leaks were observed during testing other than those initiated by installation and removal of test instrumentation.

The hoist up cross port relief valve (Load Relief Valve in the block diagram) was observed to be adjusted all the way in, or approximately to its highest setting. Pressure testing of this valve while on the machine, with the load drum mechanically locked and the hydrostatic pump control activated by hand for precise control, was inconclusive as to the actual pressure setting, but the system was brought to approximately 4000 psi in the hoist up direction without evidence of fluid bypass on overpressure (valve opening). The hydrostatic pump would not develop more than 4000 psi. Bench testing would be required to determine functionality and pressure setting of this valve. The relief setting of this valve should be approximately 3900 psi.

Unconfirmed reports from the field are that this relief valve was adjusted in the field at one point to limit SLP to 24,000 lb, though it would not be possible to determine what pressure it was adjusted to after the fact, or even if it actually was adjusted downward in the first place. It is only mentioned because there is evidence of missing paint and rust, and is the only valve of its type out of a total of six such valves that had the appearance of recent adjustment, recent meaning after the crane was last painted.

Charge pressure was checked at the test port on the charge pump, and determined to be approximately 390 psi with the pump not stroked (neutral), which is at the high end of the normal range. Since the crane had not been running long, and only with all drums stationary, the hydraulic fluid temperature was lower than normal steady-state running temperature limits, and charge pressure would be expected to be a little high under those conditions.

Charge pressure was also checked at the cooling shuttle manifolds, which registered no more than 140 psi at governed engine speed at one, and 150 psi at the other. However, both shuttle valves should have registered something less than that when the hydrostatic pump was neutral, and over 170 psi (relief set pressure) when the pump is on-stroke (not neutral) due to flow pressure within the valve, and backpressure in the lines returning to tank.

Extremely brief gauge readings of near zero pressure at the shuttle relief valve with small hydrostatic pump actuation motion suggested broken centering springs, a broken or damaged valve spool, or binding of the spool within the valve body. Failure to achieve at least set pressure with the hydrostatic pump on-stroke suggests charge relief pressure setting too low and/or a broken or otherwise malfunctioning cooling shuttle valve or valves.

The Load Holding Valve had a plastic cup attached, ostensibly to catch fluid leaks from that valve. No significant fluid quantity was observed in the cup, and personnel on the crane explained that it was to catch an intermittent drip, which was subsequently stopped by tightening the valve attachment. No further investigation was warranted at that time.

The Adjustable Restriction in line with the high pressure hydraulic fluid supply to the High and Intermediate Shift Valves appeared to be set at or near its least restrictive setting. The potential flow rate out of the working circuit on the load side to the motor shifting actuators could not be determined without a flow meter,

Electrical and Controls

The intermediate and high speed range pressure switches are contained in a single unit, made by Barksdale Control Products, with a single load pressure signal feed hose teed from the same port the load gauge in the operator's cab is tapped from, and the motor hydraulic displacement shifting fluid supply to the High and Intermediate Shift Valves. The two pressure switches contained therein are independently adjustable for opening on rising pressure.

One of the two switches presently does not function, and is bypassed with a short jumper wire. The functioning switch is improperly set at approximately 1500 psi (700 psi would be appropriate), and is connected in series with the High Shift Valve. The Intermediate Shift Valve is connected to the bypass jumper in such a way that intermediate speed is not directly selectable with the operator's control switch, and only low and high speed ranges are selectable.

The Markload safe load indicator overload function was tested with the engine off, and the hoist up enabling circuitry was disabled when a load in excess of 24,000 lb was simulated with an external potentiometer load pin simulator. The appropriate warnings and hoist up shut down features functioned as intended with the engine running, stopping the drum (empty hook) and setting the brakes.

Wednesday, November 30, 2011
Favco 1500 crane, #4 World Trade Center

Additional testing of the Hydrostatic Pump and Charge Pump was performed. Charge pressure was measured as the Hydrostatic Pump was stroked against a locked main hoist drum. Charge pressure was observed dropping to near zero psi as the pump came on stroke, climbing again when the manual control was held steady in a fully-stroked position. This was repeated a number of times, with similar results.

The Charge Pressure Switches (Barksdales) on all three hoist pumps were opened and examined. The boom pump Charge Pressure Switch signal hose was observed to be disconnected from the pump, and the auxiliary pump Charge Pressure Switch connected in its place.

Wiring and connections of the Charge Pressure Switches was examined. An unnumbered jumper wire was found between the normally closed (NC) terminals of the main and boom Charge Pressure Switches. The function of the jumper wire was not clear at the time this observation was made.

Wire number 109 was found landed on the common terminal of the boom pump Charge Pressure Switch, rather than the normally open (NO) terminal, where it would normally be found.

The improper connection of wire number 109 had in effect overridden the Charge Pressure Switches, allowing the control system to supply compressed air to the operator's manual control levers regardless of the actual charge pressure.

The unnumbered jumper wire was later determined to be a parallel conductor to the original wiring between the NC contacts of all three Charge Pressure Switches, and was therefore both redundant and unnecessary, but did not modify the function of the system. The reason for its existence is unknown.

The Shuttle Relief Valves were bench tested and determined to be set at between 130 and 135 psi. The design setting for these valves is 170 psi.

The cooling shuttle valves were dismantled and examined, and it was determined that they were in good working order and functioning properly.

## VI. Incident Sequence of Events

A load of approximately 14,600 lb was lifted from the building, swung over a landing area on the ground, and lowered. At one point, the load began to drop apparently not under the control of the operator, who pulled back on the control lever in an attempt to arrest the descent of the load. The brakes were applied when the operator moved the control lever to the neutral position. The total distance the load descended was approximately 100 ft.

The middle hydraulic motor had, by the end of the event, leaked a substantial amount of hydraulic fluid from its main shaft seal, but no other damage or leakage was reported.

At a later time, the operator tried to lower the load slowly, but the hoist lowered in a jerky motion, and would not raise at all, and the attempt was quickly abandoned in favor of transferring the load to another tower crane on the same building.

Given what was evident during the hoist examinations, there are three possible scenarios for this event.

1) A worn Hydrostatic Pump will consume an excessive amount of make-up hydraulic fluid when working at high pressure due to excessive clearances between moving parts. If the load is moving and the Charge Pump is unable to maintain a minimum system pressure, motor cavitation and lack of lubrication is likely, resulting in damage to the motors and possibly the Hydrostatic Pump. The Charge Pressure Switch circuit would normally shut down the controls and apply the brakes automatically, but it was disabled and could not activate.

Cavitation potentially allows the motors to 'outrun' the fluid column coming into the motors through the low pressure side because the charge pressure system cannot flow enough fluid to make up the difference.

Motor cavitation is tantamount to the motors having a smaller displacement than they actually have, as the vacuum in the cylinder when the fluid cannot fill cylinder behind the retreating piston is not incompressible like hydraulic fluid, and some of each piston's stroke contributes virtually nothing to supporting the load. Reduced effective displacement results in higher average pressure required to support the load. If the pressure is high enough, fluid will flow past the Load Relief Valve to the other side of the motors, which is essentially a 'short circuit' allowing the motors to run without adequate resistance to support the load.

Loss of positive pressure on the low pressure side of the circuit would normally allow the Load Holding Valve to close, stopping and holding the load against gravity, but the Fixed Restriction in the pilot line that controls the valve slows the reaction time of the valve, allowing cavitation to begin. Once begun, it can run away without warning.

Severe cavitation of the motors would have then pulled the o-rings within the one motor out of their grooves, allowing clear passage from the high pressure ports within the motor to the motor case, probably exasperating the cavitation problem.

When the operator pulled back on the control stick to attempt to provide hoisting torque to arrest the load, high pressure fluid from the Hydrostatic Pump bypassed the now non-existent o-rings, pressurizing the motor case beyond design value, and blowing the main shaft seal, sending hydraulic fluid to the exterior of the pump.

Scoring of the motor distributors could have been caused by momentary lack of lubrication, or over-speeding as the load was accelerating downward at high speed, or a combination of both. The top motor, which was new when installed, had a broken Oldham coupling, which connects the distributor to the motor shaft. This type of failure is known to the manufacturer, and is caused by the distributor heating rapidly and swelling within the bore, binding, and eventually breaking.

Once the Oldham coupling is broken, the hoist system essentially has only two motors, as the third motor with the broken coupling will still rotate with the winch drum, but will not contribute to supporting the load. The lumpy sensation the operator experienced when trying to lower the load after the incident was probably the regenerative effect of the two or three (of five) pistons that were open to the high pressure side, which alternately resist hoisting, then aid in hoisting,

much like a car going over hills of a generally sinusoidal profile.

2) The Cooling Relief Valve is set too low, allowing partial cavitation to occur with each lowering (primarily) operation, especially under load. As in 1) above, charge flow with such a low relief setting may not be adequate at high running speeds to adequately protect against cavitation, with resultant lubrication starvation of the distributor, and long term cumulative galling. The distributor in the top motor eventually seizing would then set off a similar chain of events as in 1) above.

3) Malfunctioning Pressure Switches for speed range lockout (Barksdale unit). Shifting the speed range selector switch in the operator's cab to high speed range with a load too heavy for high speed range operation would, due to a malfunctioning an improperly bypassed Barksdale pressure switch and associated safety systems, allow all three motors to simultaneously shift to minimum displacement (high speed range) anyway. This essentially quadruples the load pressure from that required in low speed range, which with a 14,600 lb load, would cause the hydraulic fluid on the load side to bypass the Load Relief Valve even at its required setting, until one motor shifted back to full displacement, lowering the load pressure to below the Load Relief Valve setting. A Load Relief Valve improperly set too low would make this scenario possible over a wider range of load (lower threshold), but the Load Relief Valve set even at its highest (~4600 psi for that particular valve) would still not preclude the possibility.

   Simultaneously shifting all three motors while running at speed may draw an excessive amount of hydraulic fluid from the load side of the circuit, allowing the motors to briefly run even faster than the fluid column in the load side would normally dictate, and the charge pump might be unable to supply adequate hydraulic fluid to make up the difference. The Adjustable Restriction in the supply line is intended to prevent this, but its adjustment state at the time of the incident is unknown. Cavitation would be the eventual result, with loss of control as in scenario 1) above if severe enough.

   It should be noted that reports from the field are that the operator did <u>not</u> shift the selector switch, but this scenario is included as it is physically possible due to malfunctioning safety systems, and therefore at least warrants mention for completeness.

The most likely direct cause of the incident is the first scenario, a badly worn main Hydrostatic Pump. Absent protection from the Low Charge Pressure

## VII. Summary and Conclusions

It is indisputable at this point that the hoist motors suffered ongoing cavitation, eventually resulting in failure of one of the three motors. The cause of the cavitation was from any of a number of reasons or combination of reasons, including (but not limited to) low charge pressure due to a worn main hoist Hydrostatic Pump, improper Shuttle Relief Valves settings, and broken and bypassed Pressure Switches (intermediate and high speed range limiting).

The observed cumulative damage to the motors is a strong indication that charge flow was borderline inadequate, or periodically completely absent, for an extended period of running time. The inoperative state of the Charge Pressure Switch control circuit had masked the problem, which would initially present itself through the occasional dropping out of the operator's controls at higher working circuit pressures, accompanied by illumination of the red Low Charge Pressure light, had the charge pressure safety system been working as designed.

The primary reasons for insufficient charge flow appear at this time to be a combination of worn main hoist Hydrostatic Pump, and improperly set Shuttle Relief Valve. Field testing of the Hydrostatic Pump indicates severe loss of charge pressure when loaded to high pressures, which will cause momentary loss of makeup flow into the working circuit, and result in hydraulic motor cavitation primarily during transient hoist events, such as accelerating a lifted load, or shifting the hydraulic motors.

Shuttle Relief Valves set below the design value are likely to cause partial cavitation during sustained operation at higher motor speeds, with lower hook loads, contributing to overheating and the observed cumulative wear of the hydraulic motor distributors, which in turn has lead to the observed failure of one motor and near failure of the remaining two.

Teardown and examination of the main hoist Hydrostatic Pump is indicated at this point to verify that the loss of charge pressure is internal to the pump, as this pump, in concert with the Charge Relief Valve settings noted above, is by far the most likely root cause of the incident investigated here. The conclusions stated herein may be subject to revision pending the outcome of additional examination and testing.

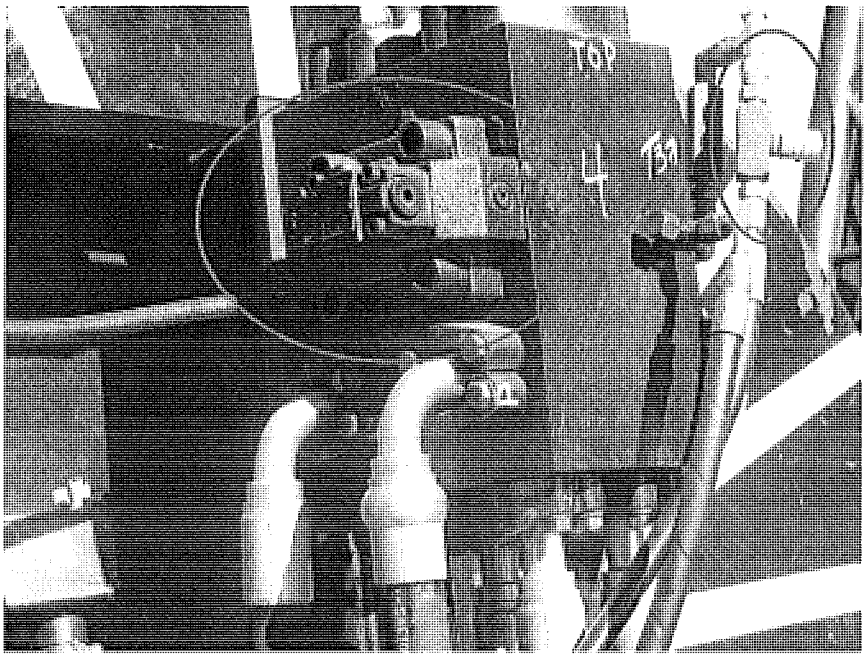

Figure 1
Load Relief Valve (left)
Adjustable Restriction (right)

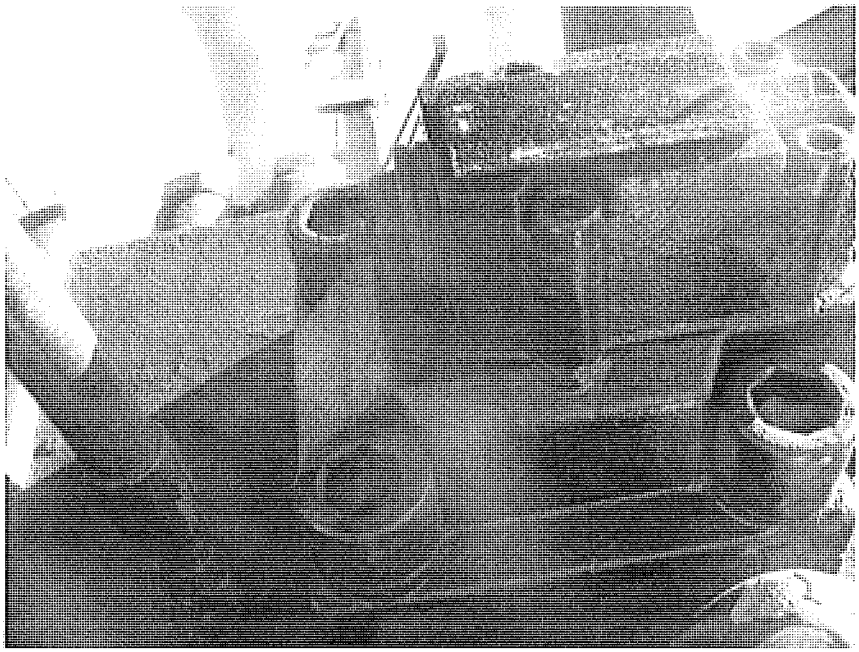

Figure 2
Load Relief Valve
Adjustment Screw

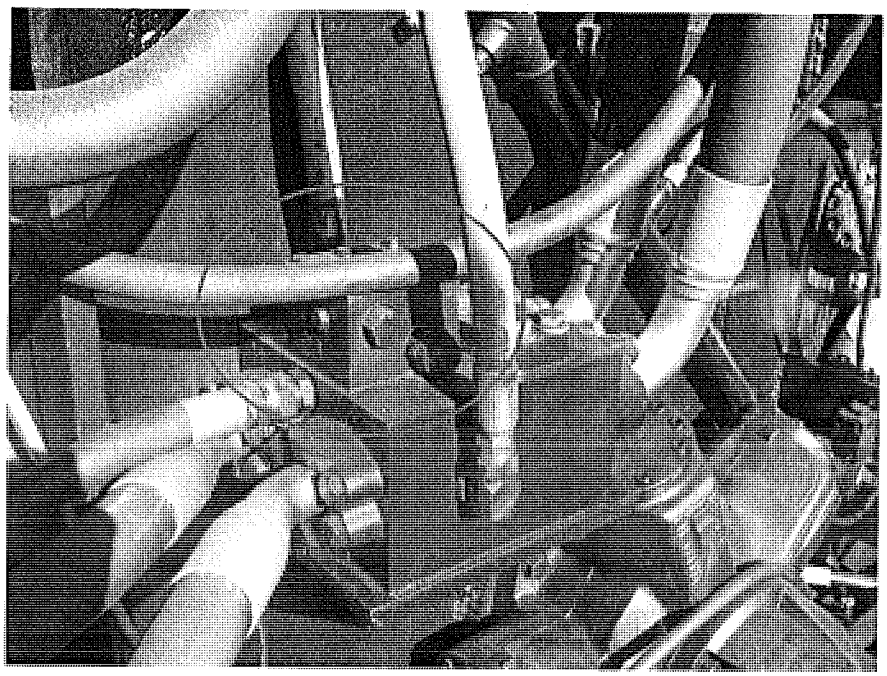

Figure 3
Cooling Shuttle Valve Assembly (typical)

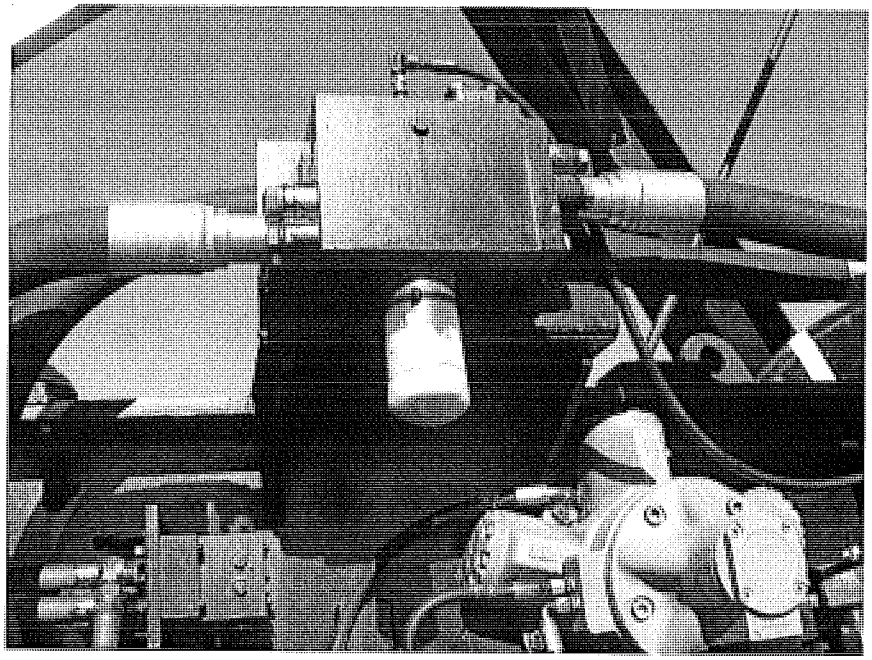

Figure 4
Load Holding Valve
(plastic cup in place)

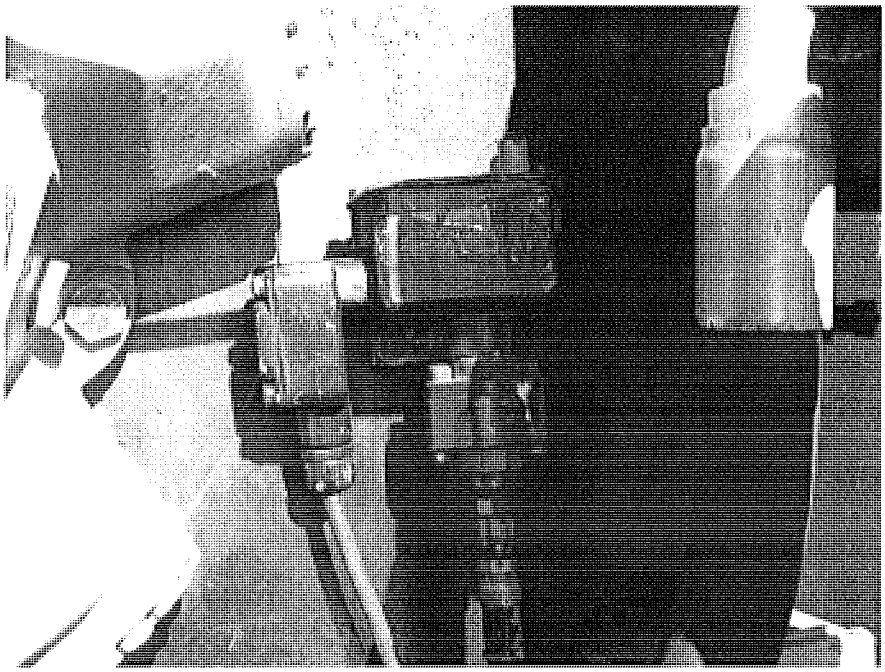

Figure 5
Barksdale Switch
Contains High and Med. Pressure Switches

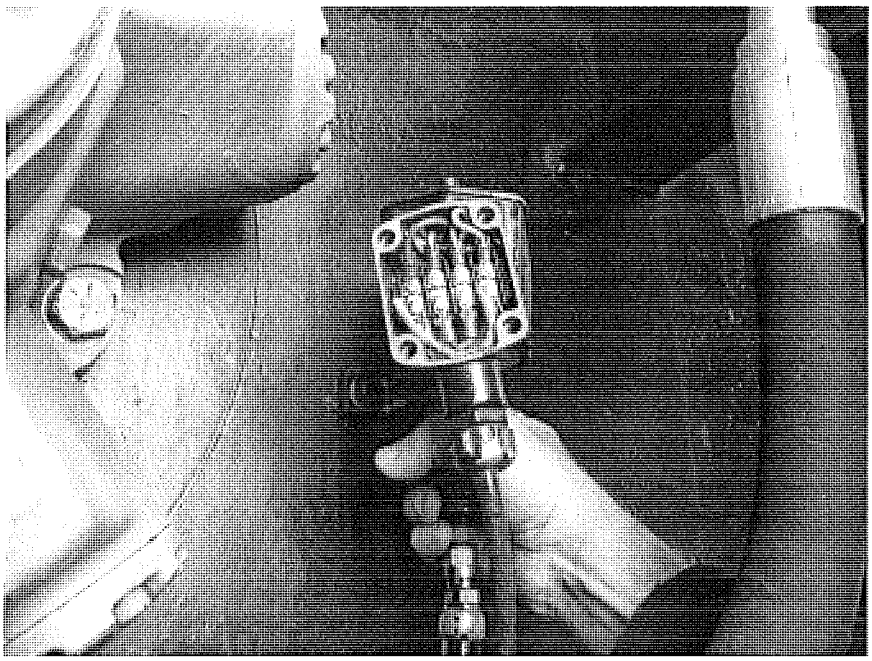

Figure 6
Barksdale Switch
Bypass Jumper Wire (green)

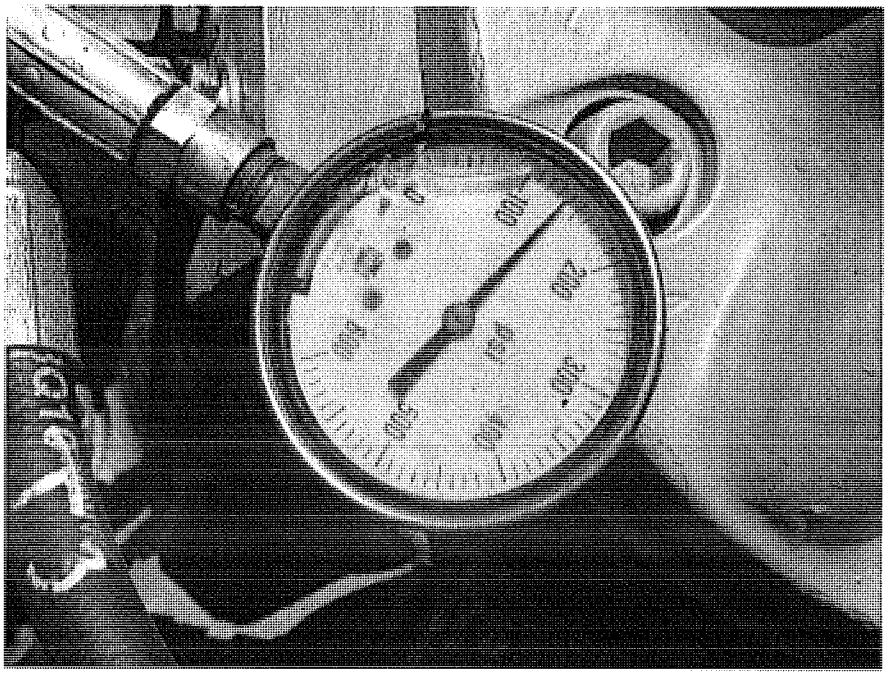

Figure 7
Shuttle Relief Valve Pressure

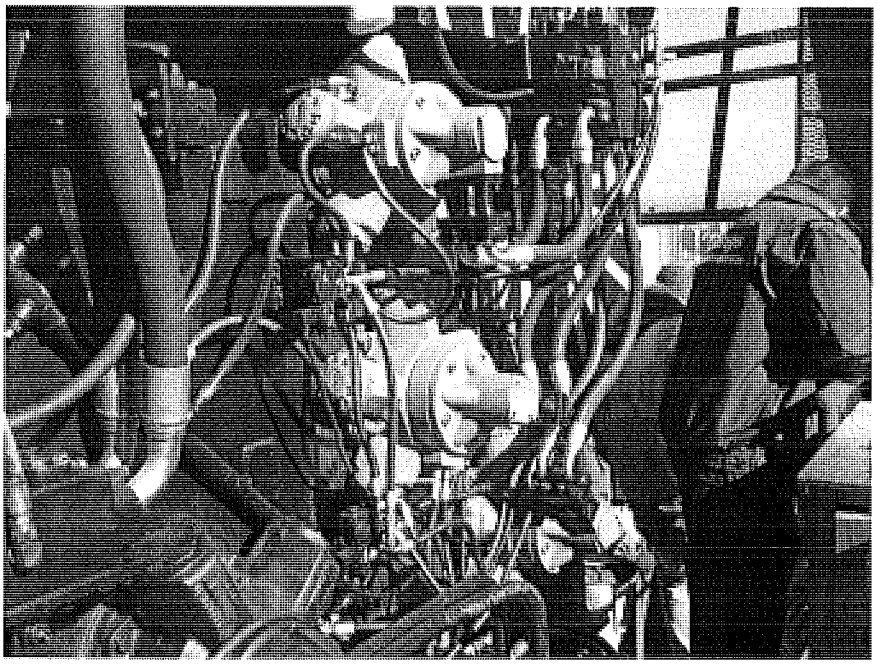

Figure 8
Staffa Radial Motors (3)
Boom Motor (1) at Bottom-left

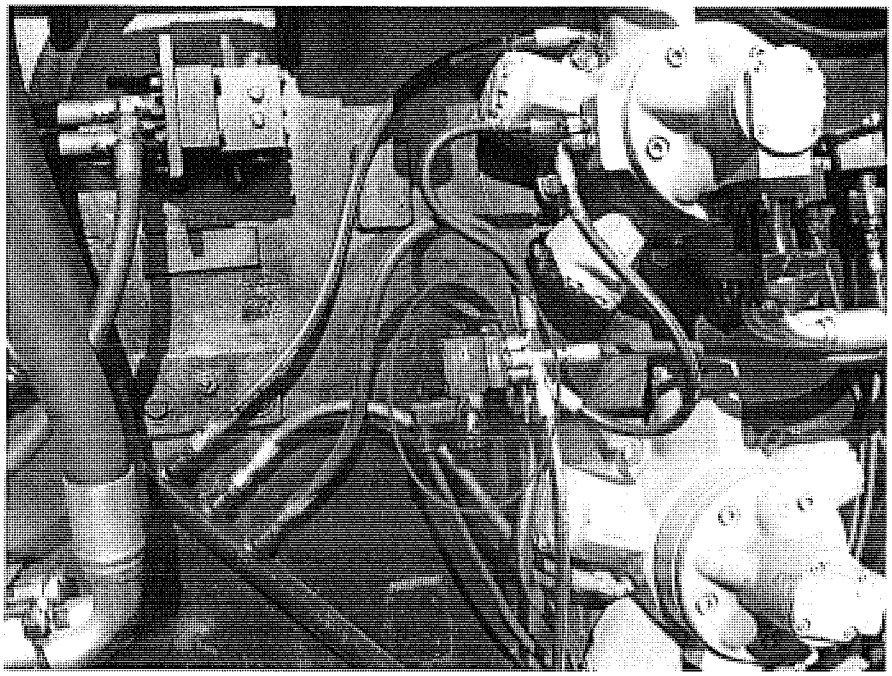

Figure 9
High Shift Valve
(typical)

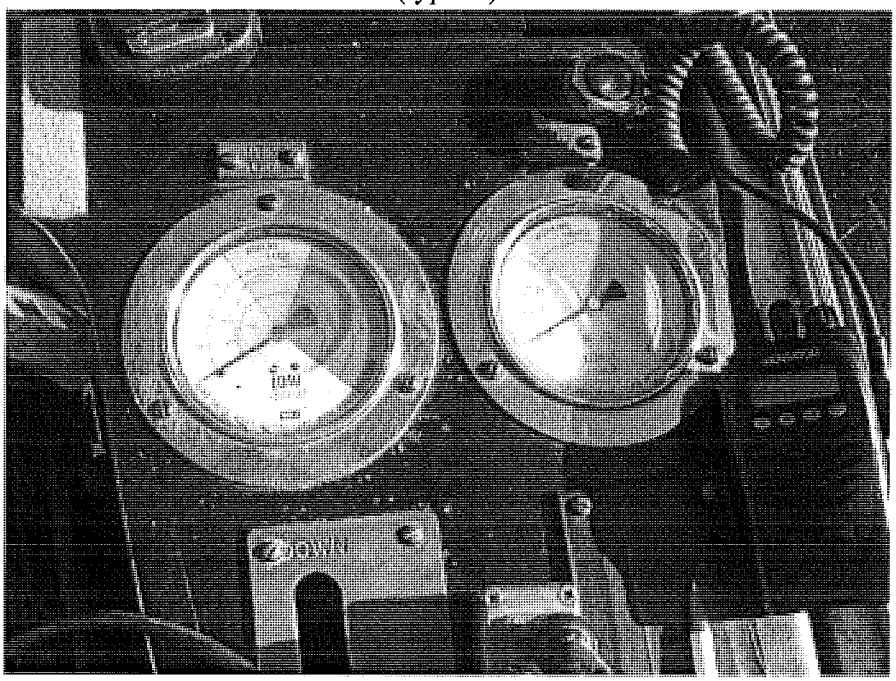

Figure 10
Low Charge Pressure Light
(apparently unmarked)

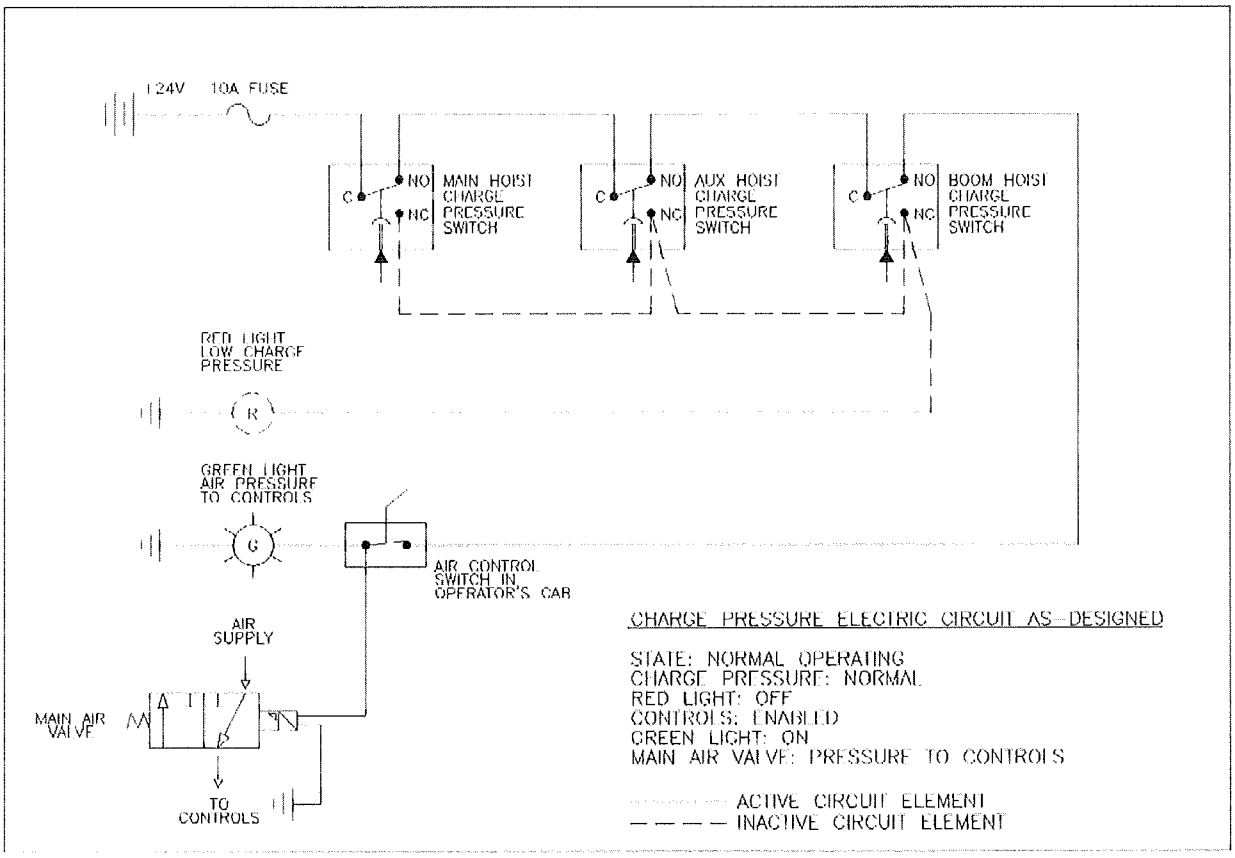


Figure 11
Charge Pressure Protection Circuit
As-designed
Normal Operation

With adequate charge pressure at each of the three Charge Pressure Switches, current passes from the source to the Air Control Switch on the operator's console, and on to the Main Air Valve, lighting the green light on the console. The operator's controls are enabled.

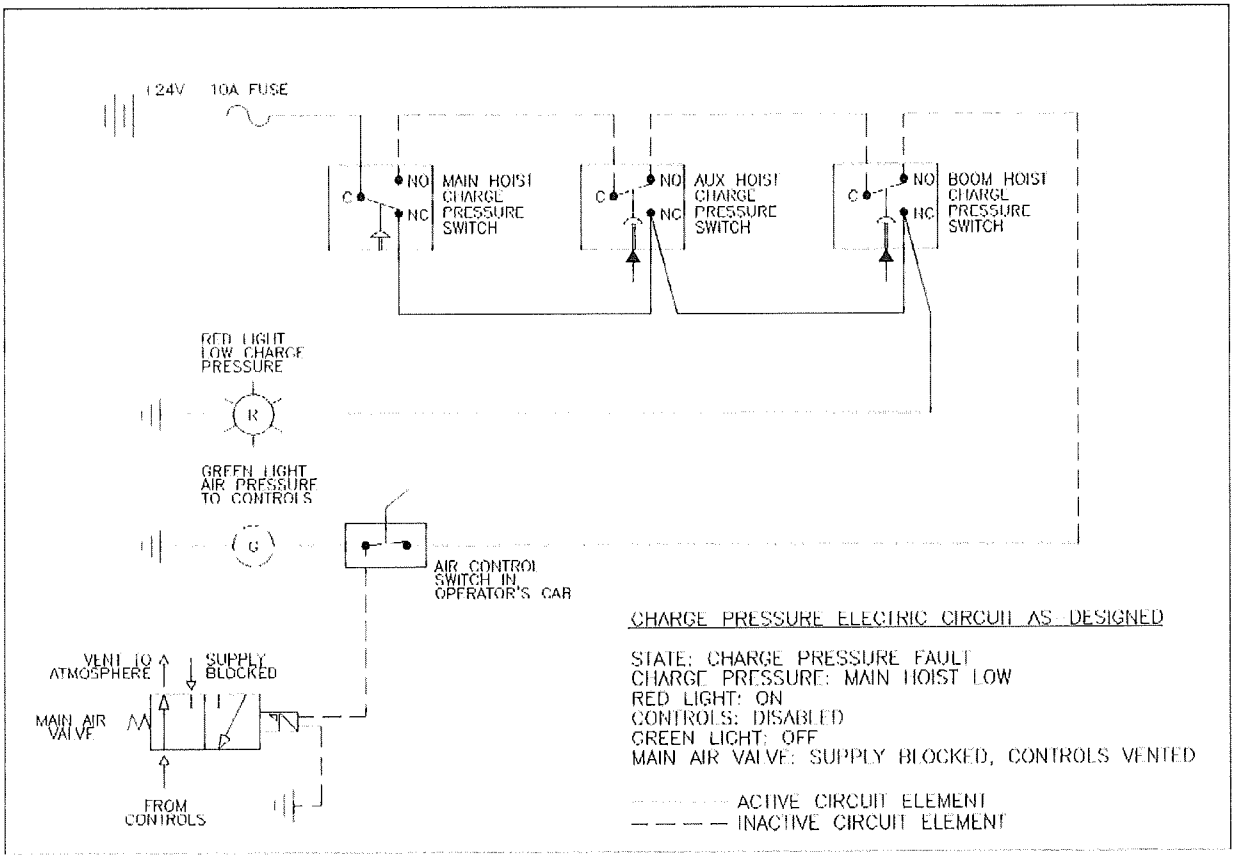


Figure 12
Charge Pressure Protection Circuit
As-designed
Low Charge Pressure

With low charge pressure at the main hoist Charge Pressure Switch, current passes from the source to the red light on the operator's console, and the circuit to the Main Air Valve and green light on the console is broken. Air within the operator's controls is vented to atmosphere, disabling the controls and setting the brakes.

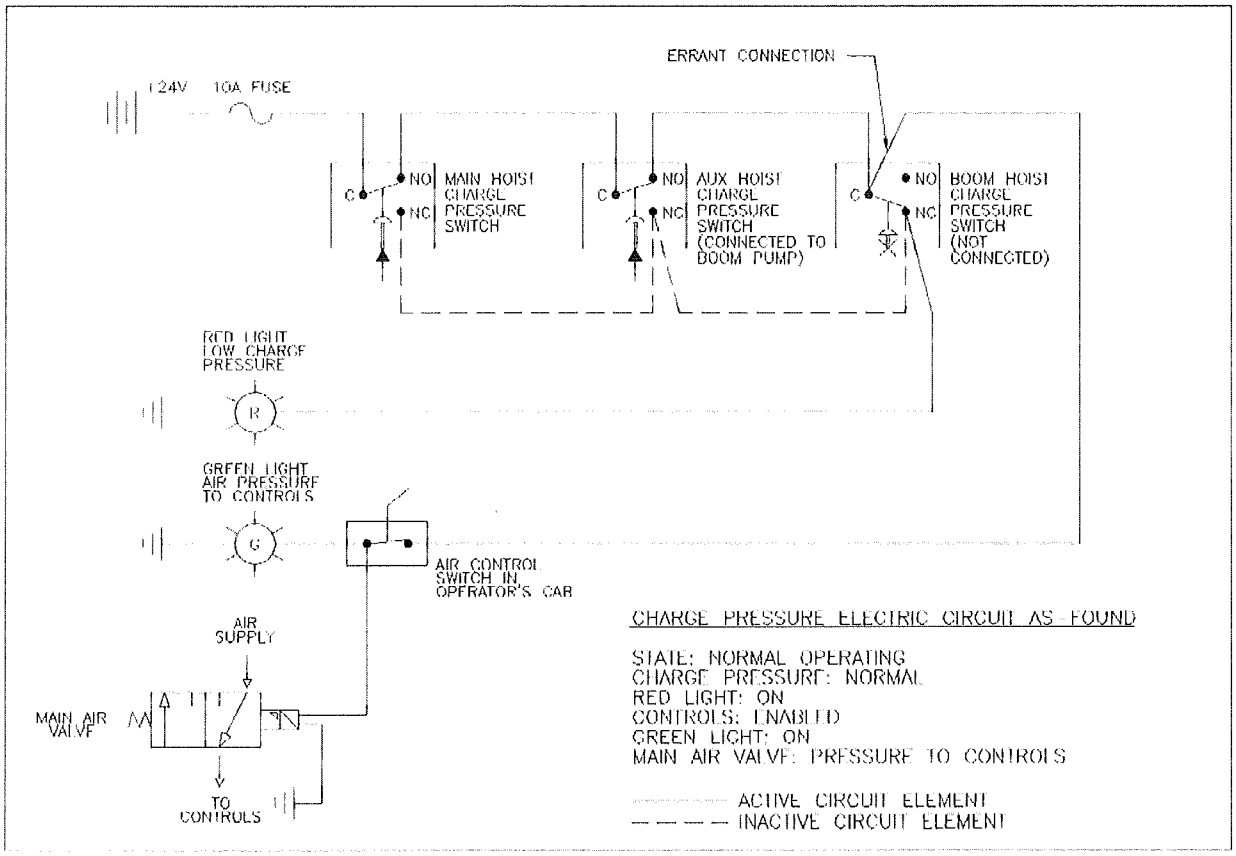


Figure 13
Charge Pressure Protection Circuit
As-Found
Normal Operation

With adequate charge pressure at each of the two working Charge Pressure Switches, and the original boom hoist Charge Pressure Switch hydraulically disconnected, current passes from the source to the Air Control Switch on the operator's console, and on to the Main Air Valve, lighting the green light on the console. The operator's controls are enabled. Current also passes through the boom hoist Charge Pressure Switch to the red Low Charge Pressure light on the operator's console.

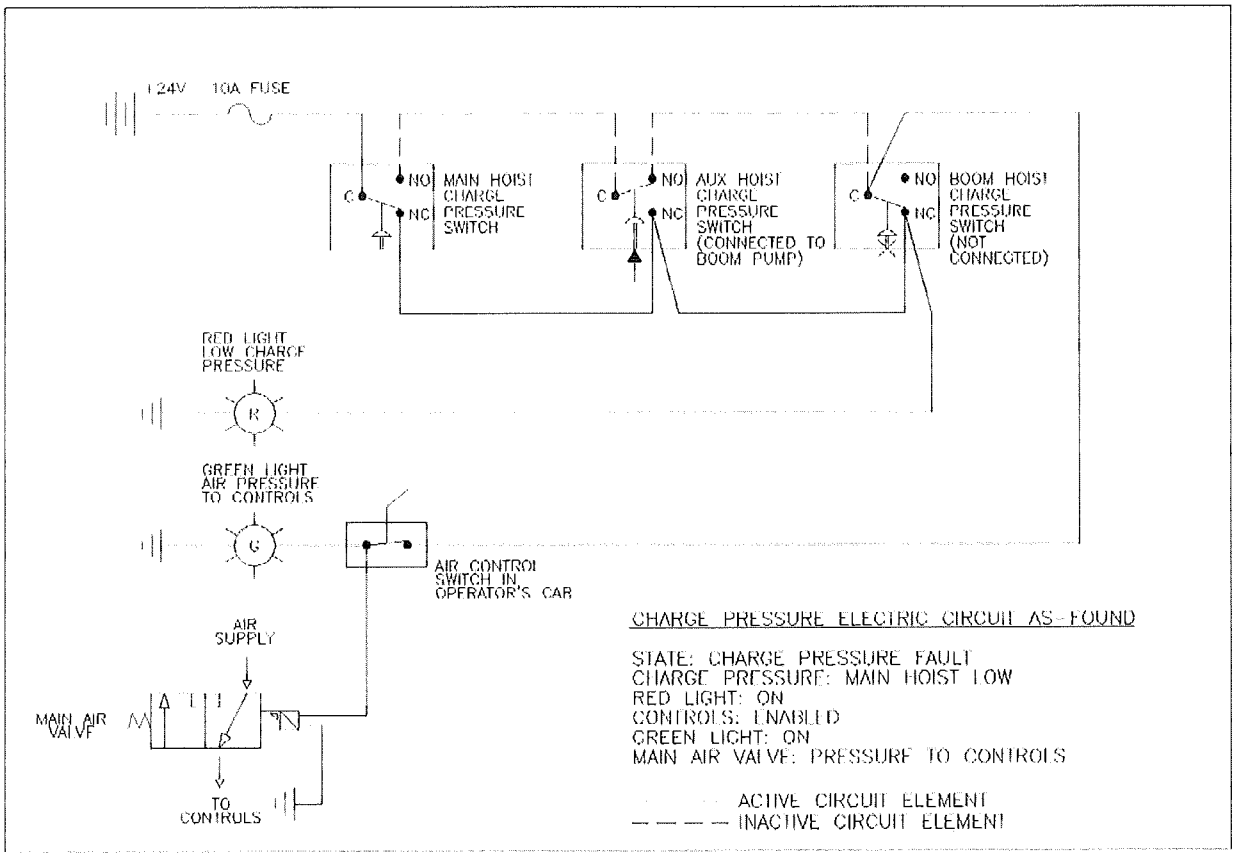


Figure 14
Charge Pressure Protection Circuit
As-Found
Low Charge Pressure

With low charge pressure at the main hoist Charge Pressure Switch, current passes from the source to the red light on the operator's console. Current is also back-fed through the boom hoist Charge Pressure Switch to the Air Control Switch on the operator's console and on to the Main Air Valve and green light on the operator's console. The operator's controls remain enabled, and the brakes remain under operator control rather than automatically setting.

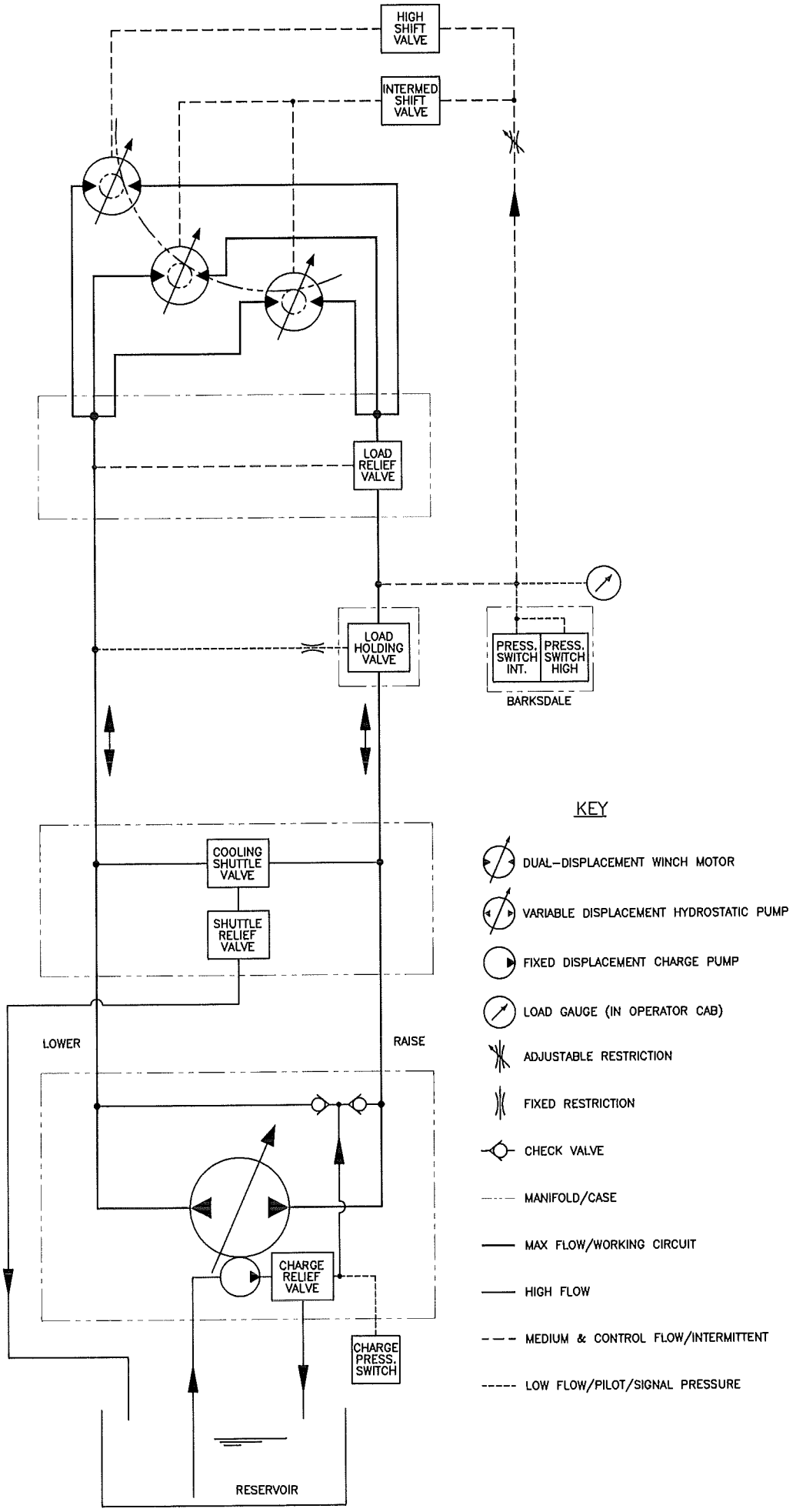
HIGH SHIFT VALVE
INTERMED SHIFT VALVE
LOAD RELIEF VALVE
LOAD HOLDING VALVE
PRESS. SWITCH INT.
PRESS. SWITCH HIGH
BARKSDALE
COOLING SHUTTLE VALVE
SHUTTLE RELIEF VALVE
LOWER
RAISE
CHARGE RELIEF VALVE
CHARGE PRESS. SWITCH
RESERVOIR
KEY
DUAL-DISPLACEMENT WINCH MOTOR
VARIABLE DISPLACEMENT HYDROSTATIC PUMP
FIXED DISPLACEMENT CHARGE PUMP
LOAD GAUGE (IN OPERATOR CAB)
ADJUSTABLE RESTRICTION
FIXED RESTRICTION
CHECK VALVE
MANIFOLD/CASE
MAX FLOW/WORKING CIRCUIT
HIGH FLOW
MEDIUM & CONTROL FLOW/INTERMITTENT
LOW FLOW/PILOT/SIGNAL PRESSURE

Kawasaki
Hydraulics

# Kawasaki Precision Machinery – USA
# Inspection and Evaluation Report

| | |
|---|---|
| Date | 11-17-2011 |
| Customer | Airline Hydraulics |
| End User | Federated Crane |
| Model # | HMC080/90/25/S03/X/71 |

**Back ground:**
An inspection and evaluation of three Staffa HMC080 motors was requested by Rob Panzerella of Airline Hydraulics. The motors had been mounted on a crane used at the site of the rebuilding of The World Trade Center in New York City. The motors were used on a winch mounted to a crane which lost control of a load and dropped it. Because of the serious nature of the incident, a number of representatives from various departments in New York City participated in the inspection, including the Port Authority and the NYC Cranes and Derricks group,

**Observations:**
The three motors were disassembled by Powertech Hydraulics prior to our arrival. Powertech has many years of experience rebuilding Staffa motors.

**Serial #00124813**
This motor was identified as a new motor, meaning that it had operated for some time, but had never been previously repaired. It was also determined that this was the first motor to fail.
The Oldhams coupling in this motor was sheared and was able to spin upon the face of the crankshaft. The broken ends of the tang of the coupling remained inside the motor. The distributor valve housing was galled near the ports. The spool also had galling where it had contacted the valve housing. The o-rings in the C spacer housing were damaged. The inside surface of the connecting rod hold down rings had heavy contact with the connecting rod shoes.
The motor case, crankshaft, and piston connecting rod assemblies are all good condition.

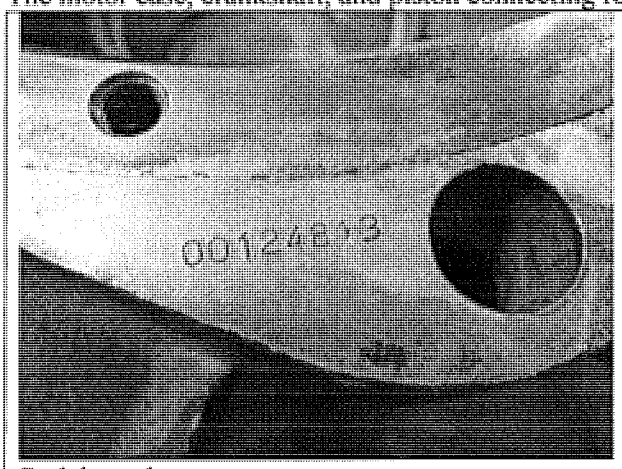

Serial number

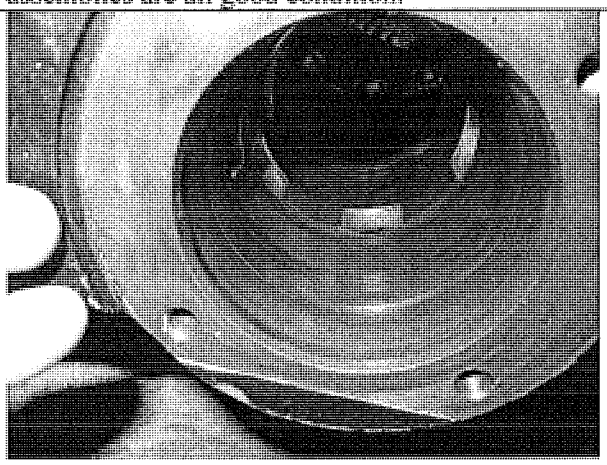
Distributor housing. Galling near ports.

Broken Oldhams coupling

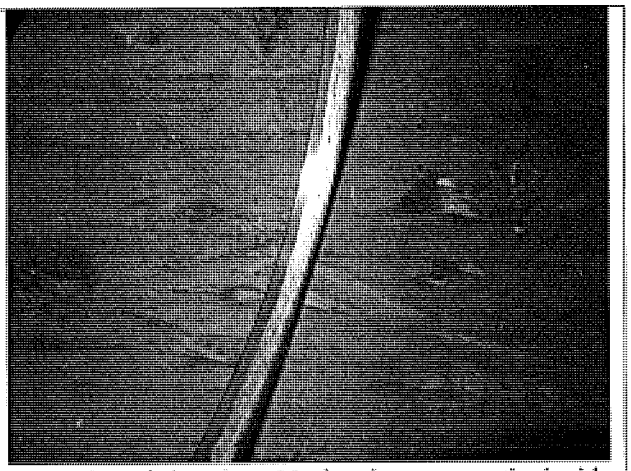

Conrod retaining ring. Notice the wear on the inside edge, typically the result of cavitation.

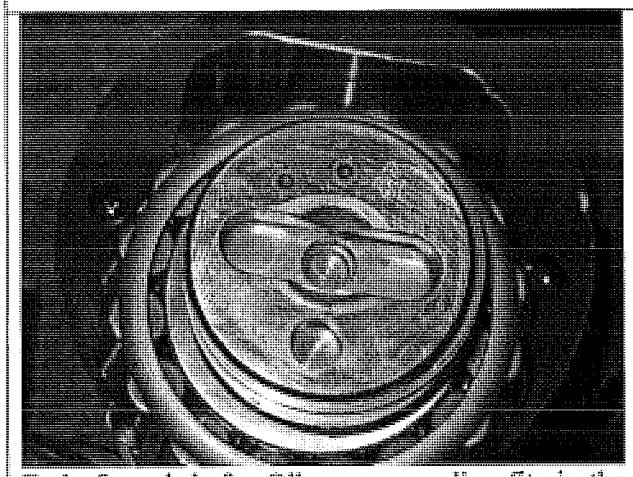

End of crankshaft. Olhamans coupling fits in the slot. The face is marked where the coupling contacted it while the crankshaft was turning.

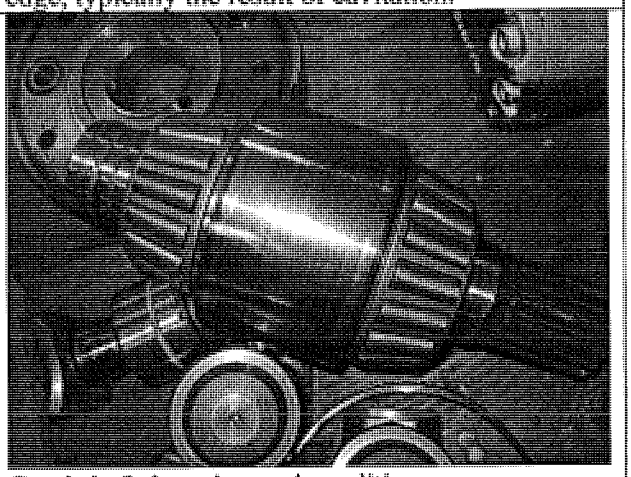

Crankshaft drum in good condition.

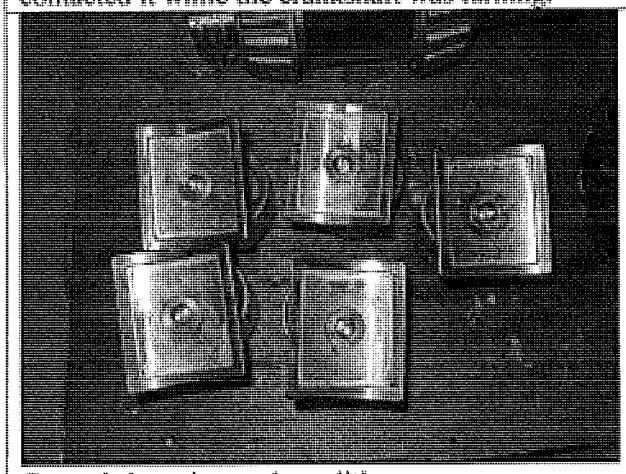

Conrod shoes in good condition.

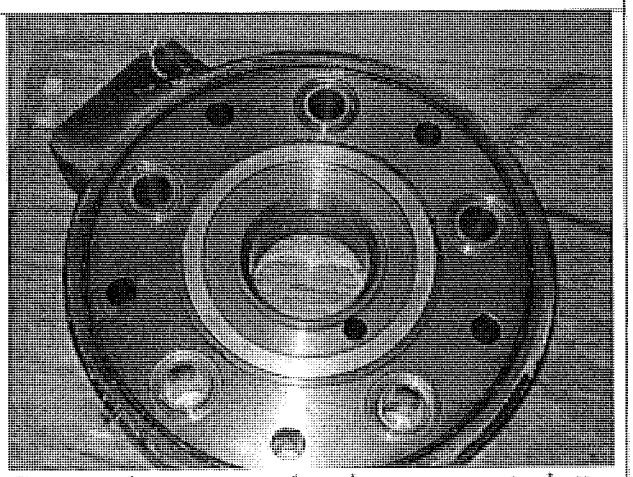

C-spacer has trepanned o-ring grooves to better retain the seals.

**Failure Analysis:**

The galling between the spool and the distributor housing caused the distributor valve to lock during operation. Because all of the motors operate on a common spur gear, the crankshaft continued to rotate shearing the Oldhams coupling. Loss of this motor would have reduced the overall displacement by 1/3 – assuming all motors were operating at the same displacement. A corresponding reduction of torque would be the result along with an increase of downstream pressure. The possible cause for the galling of the spool would be a lack of lubrication either due to an over speed condition or cavitation and a loss of charge pressure.

**Serial #01M16980**

This motor was identified as the motor which sprayed oil and had the o-rings sucked into the connecting ports. The Oldhams coupling and the face of the crankshaft in this motor were stressed and bent. The o-rings in the C spacer are damaged. The spool and distributor valve housing are galled. The inside edge of the connecting rod retaining rings are worn by contact with the conrod shoes.

The motor case, pistons, conrods, and the crankshaft drum are all good condition.

**Failure analysis:**

The galling of the distributor is likely the result of a lack of lubrication, which is most often caused by cavitation or over speeding of the spool. Displacement of the o-rings is known to be caused by cavitation. If the motor is starved of oil and there is no oil flowing out, the motor can spin without control. Starved of lubrication, the spool will seize in the bore and lock. In this case, the drive coupling was damaged, but not completely broken.

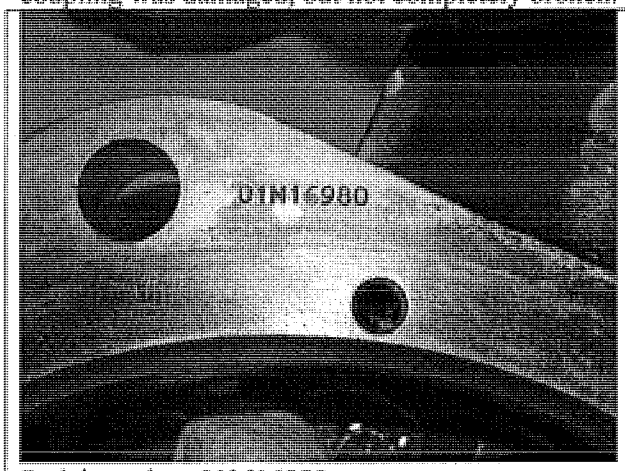


Serial number 01M16980

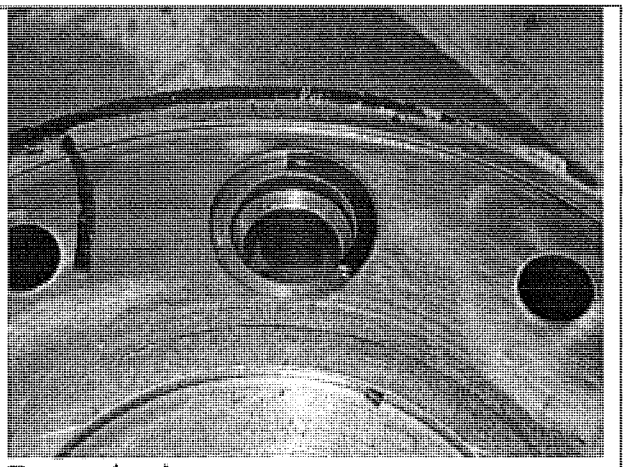

Damaged o-rings

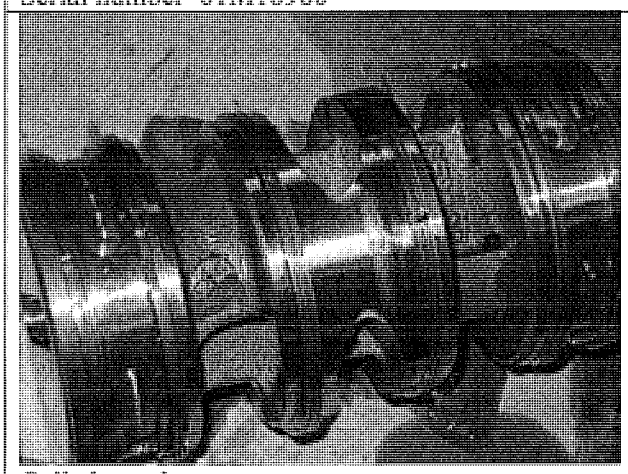

Galled spool.

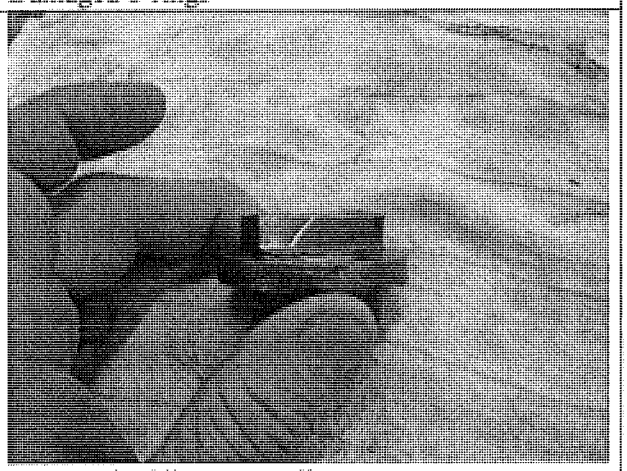

Damaged Oldhams coupling

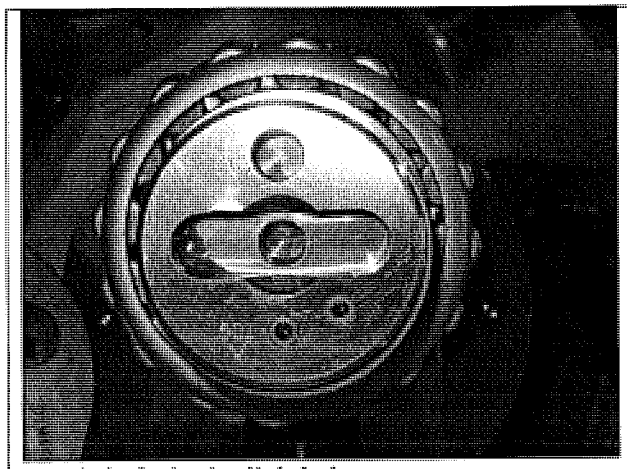

Crankshaft slot is slightly bent.

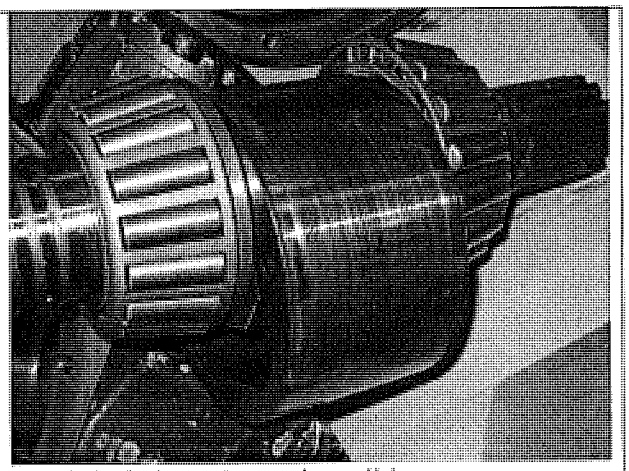

Crankshaft throw is good condition.

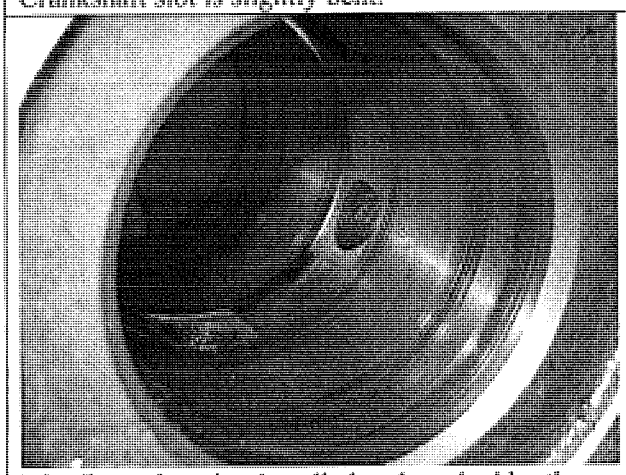

Distributor housing is galled and marked by the spool rings.

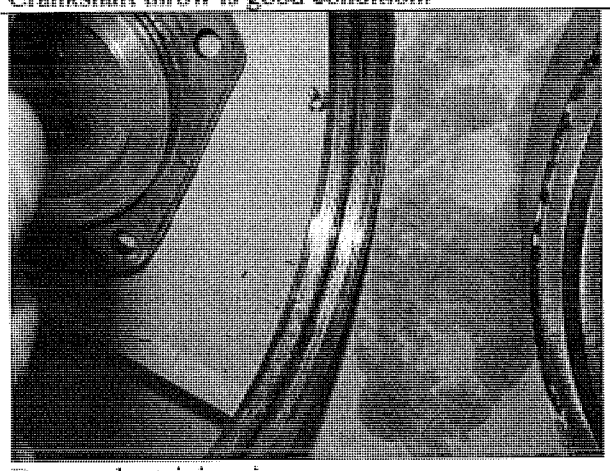

Damaged retaining rings.

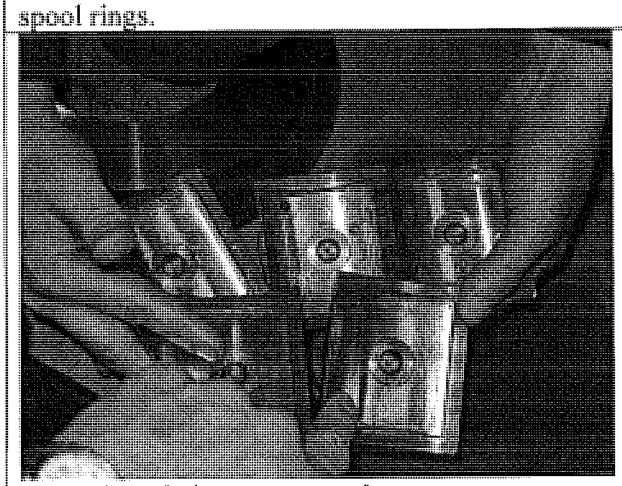

Conrods and pistons are good.

**Serial #01M16996**

The Oldhams coupling and the face of the crankshaft in this motor were stressed and bent. The o-rings in the C spacer are in good condition. The spool and distributor valve housing are galled and there is some evidence of high temperature on the spool and valve housing. The inside edge of the connecting rod retaining rings are lightly worn due to contact with the conrod shoes.
The motor case, pistons, conrods, and the crankshaft drum are all good condition.

**Failure analysis:**

The galling of the distributor is likely the result of a lack of lubrication, which is often caused by cavitation or over speeding of the motor. If the motor is starved of oil and there is no oil flowing out, the motor can spin without control. Starved of lubrication, the spool will seize in the bore and lock. In this case, the drive coupling was damaged, but not completely broken.

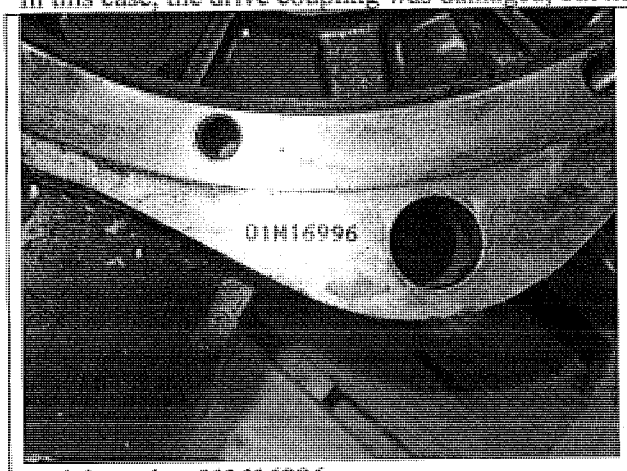

Serial number 01M16996

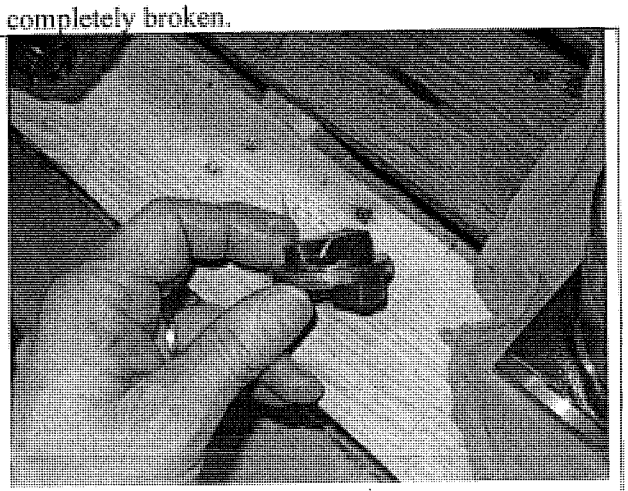
Oldhams coupling is deformed

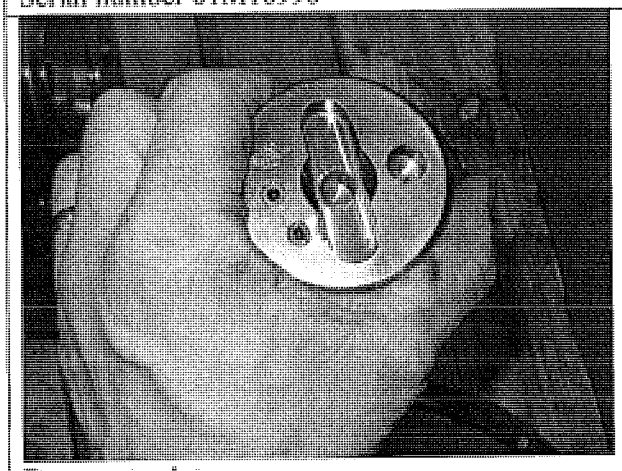
Damage to slot.

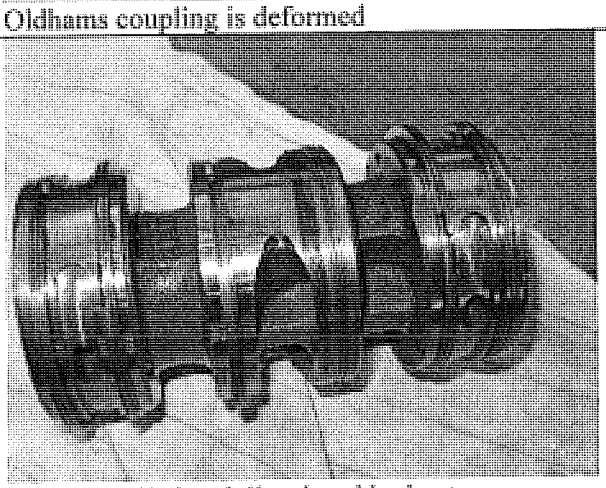
Spool is galled and discolored by heat

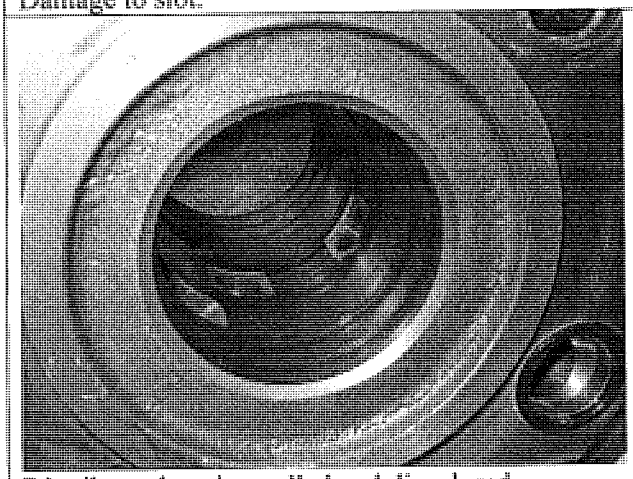
Distributor housing galled and discolored.

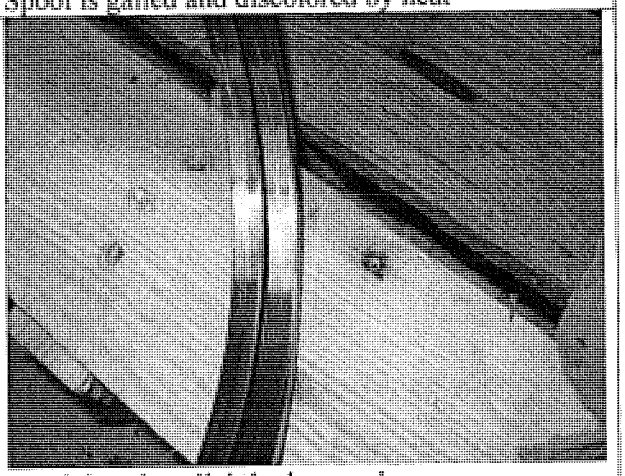
Retaining rings lightly damaged.

Conrods and pistons are in good condition

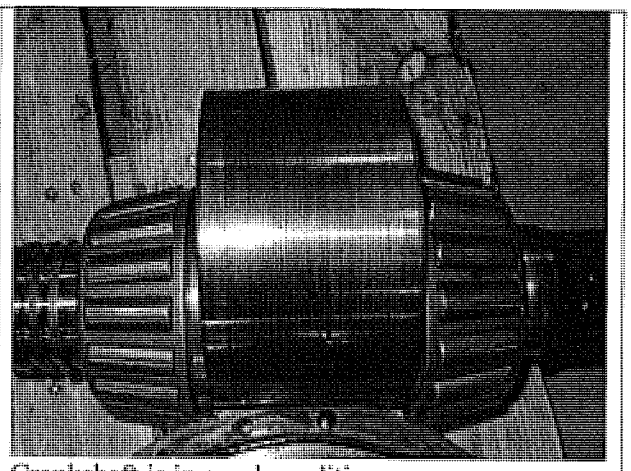

Crankshaft is in good condition

**Summary:**

The damage, in varying degrees, is the same from motor to motor. It appears that the first motor to fail, serial number 00124813, must have had the distributor valve seize quickly as the coupling sheared and there was no real impact to the end of the crankshaft. The others were either lightly seized or had operated with some amount of seizure over time. This type of failure is usually the result of the motor operating in an over speed condition, >1000 rpm. Over speed could lead to cavitation or perhaps a circuit problem could result in low charge pressure and cavitation. In either case, if the spool were to turn in the valve housing with little or no lubrication, the result would be heat and possible seizure of the spool in the housing. The inertial load or the torque generated by the other motors would shear the coupling of the first motor, the fall may have cavitated the other motors.

Report Submitted By:

Chris Hoffbeck
Engineering Supervisor

# REFERENCE 2. STAFFA MOTOR LITERATURE

Kawasaki Motors Corp., U.S.A.
Precision Machinery Division

# HMC 080

## Staffa Dual Displacement Hydraulic Motor

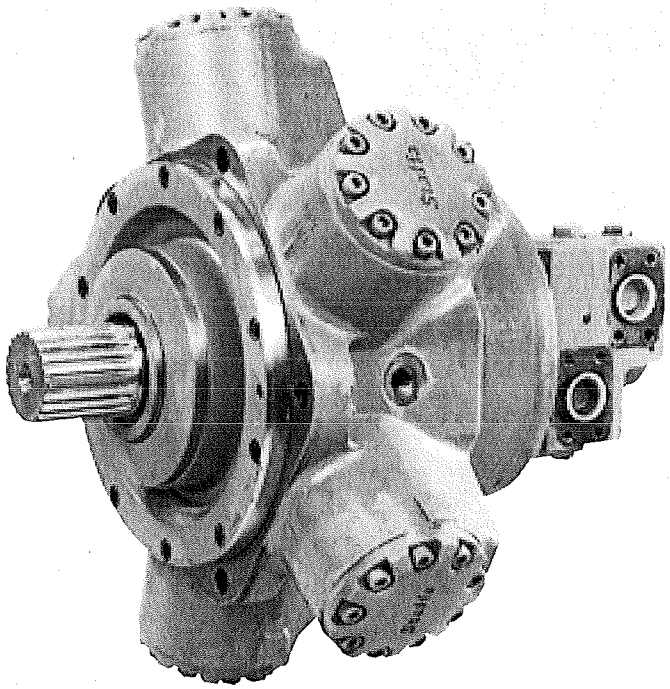

## CONTENTS


Page

1. General Description ..... 2
2. Functional Symbols ..... 2
3. Model Code ..... 3
4. Performance Data:
   Motor selection ..... 3
   Rating definitions ..... 4
   Output torques ..... 5
   Bearing life ..... 6
   Volumetric efficiency ..... 6
5. Circuit and Application Notes:
   Displacement selection ..... 7
   Starting torques ..... 7
   Low speed operation ..... 7
   Small displacements ..... 7
   High back pressure ..... 7
   Boost pressure ..... 7
   Cooling flow ..... 8
   Motor casing pressure ..... 8
6. Hydraulic Fluids ..... 8
7. Temperature Limits ..... 8
8. Filtration ..... 8
9. Noise Levels ..... 8
10. Polar Moment of Inertia ..... 8
11. Mass ..... 8
12. Installation Data:
   General ..... 8
   Motor axis horizontal ..... 8
   Motor axis upwards ..... 8
   Motor axis downwards ..... 8
   Start-up ..... 8
13. Installation Dimensions ..... 8 to 11


## 1. GENERAL DESCRIPTION

Kawasaki "Staffa" high torque, low speed radial piston motors use hydrostatic balancing techniques to achieve high efficiency, combined with good break-out torque and smooth running capability.

The HMC series dual displacement models have two pre-set displacements which can be chosen from a wide range to suit specific application requirements. The displacements are hydraulically selected by a directional control valve which can be remote from, or mounted directly on, the motor. Displacements can be changed when the motor is running.

The range of HMC motors extends from the HMC010 of 202 $cm^3$ (12.3 $in^3$) to the HMC325 of 5330 $cm^3$ (325 $in^3$) displacement.

These motors are also available in a continuously variable version using either hydro-mechanical or electro-hydraulic control methods.

Other mounting options are available on request to match many of the competitor interfaces.

The HMC080 is one of 8 frame sizes and is capable of developing torques up to 6050 Nm (4460 lbf ft) with a continuous output power of 112 kW (150 hp).

The Kawasaki range also includes fixed displacement motors, plus matching brakes and gearboxes to extend the torque range.

## 2. FUNCTIONAL SYMBOLS

All model types with variants in model code positions 6 & 7.

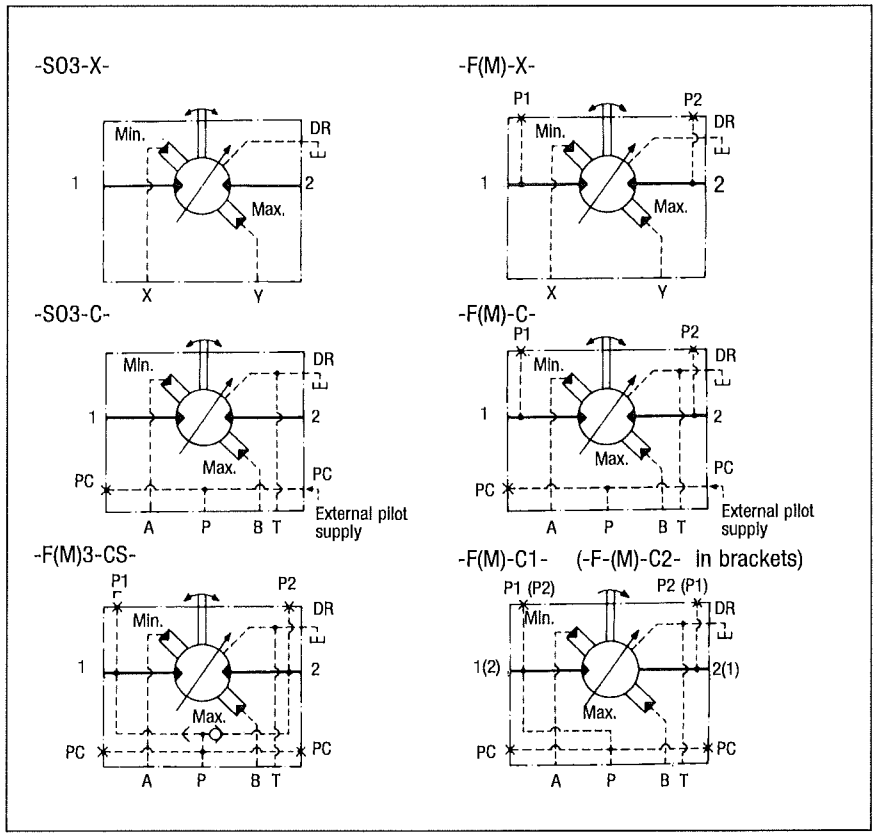

## 3. MODEL CODE

Features shown in brackets ( ) may be left blank according to requirements.
All other features must be specified.

**(F**)-HM(*)CO80-**-**-**-**-**-(T*)-30-(PL**)**

**1** **2** **3** **4** **5** **6** **7** **8** **9** **10**

### 1 FLUID TYPE

Blank = Petroleum oil
F3 = Phosphate ester (HF-D fluid)
F11 = Water-based fluids (HF-A, HF-B)

### 2 MODEL TYPE

Blank = Standard ("HMC")
M = To NCB (UK) specification 463/1981 ("HMMC")

### 3 SHAFT TYPE

P* = Cylindrical shaft with parallel key ▲
S* = Cylindrical, 14 splines to BS 3550
Q* = Female, 24 splines to BS 3550
Z* = Cylindrical shaft to DIN 5480 (W70 x 3 x 7h)

* *For installations where shaft is vertically upwards specify "V" after shaft type letter to ensure that additional high level drain port is provided.*
▲ *Max. torque 5400 Nm (3920 lbf ft)*

### 4 HIGH DISPLACEMENT CODE

90 to 45 in$^3$, in 5 in$^3$ steps

### 5 LOW DISPLACEMENT CODE

5 to 70 in$^3$, in 5 in$^3$ steps

### 6 MAIN PORT CONNECTIONS

SO3 = 6-bolt (UNF) flange: 3" valve (Staffa original valve housing)
F3 = SAE 1$^1/_4$" 4-bolt (UNC) flanges: 3" valve.
FM3 = SAE 1$^1/_4$" 4-bolt (metric) flanges: 3" valve.

### 7 DISPLACEMENT CONTROL PORTS (AND SHUTTLE VALVE)

Threaded ports/bi-directional shaft rotation:
X = X and Y ports G$^1/_4$" (BSPF to ISO 228/1)
ISO 4401 size 03 mounting face/bi-directional shaft rotation:
C = No shuttle valve
CS■ = With shuttle valve
ISO 4401 size 03 mounting face/uni-directional shaft rotation (viewed on shaft end):
C1 = Control pressure from main port 1 (shaft rotation clockwise with flow into port 1)
C2 = Control pressure from main port 2 (shaft rotation counter-clockwise with flow into port 2)

■ *Not available with "SO3" type main port connections* **6**

### 8 TACHO/ENCODER DRIVE

T = Staffa original tacho drive
T1 = Suitable for Hohner 3000 series encoders. (Encoder to be ordered separately)
Omit if not required.

### 9 DESIGN NUMBER, 30 SERIES

Subject to change. Installation and performance details remain unaltered for design numbers 30 to 39 inclusive.

### 10 SPECIAL FEATURES

PL** = non-catalogued features, e.g.:
High pressure shaft seals
Stainless steel shaft sleeves
Alternative encoder and tacho drives
HFC fluids
Motor valve housing orientation
Shaft variants
Special paint

** *Number assigned as required to specific customer build.*

# 4. PERFORMANCE DATA

Performance data is valid for Staffa HMC080 motors fully run in and operating with petroleum oil. Leakage values are at fluid viscosity of 50 cSt (232 SUS).

**MOTOR SELECTION**

Use table 1 to select appropriate displacements for each application. Refer to table 2 for pressure and speed limits when using fire-resistant fluids.

**TABLE 1**

| Displacement code* (Model code positions 4 and 5) | | 90 | 85 | 80 | 75 | 70 | 65 | 60 | 55 | 50 | 45 | 40 | 35 | 30 | 25 | 20 | 15 | 10 | 05 |
|---|---|---|---|---|---|---|---|---|---|---|---|---|---|---|---|---|---|---|---|
| Displacement volume | $cm^3$ | 1475 | 1393 | 1310 | 1230 | 1147 | 1065 | 983 | 900 | 820 | 737 | 655 | 574 | 492 | 410 | 328 | 246 | 164 | 82 |
| | $in^3$ | 90 | 85 | 80 | 75 | 70 | 65 | 60 | 55 | 50 | 45 | 40 | 35 | 30 | 25 | 20 | 15 | 10 | 05 |
| Average actual running torque | Nm/bar | 22,02 | 20,80 | 19,66 | 18,48 | 17,11 | 15,90 | 14,55 | 13,20 | 12,00 | 10,60 | 9,24 | 7,87 | 6,48 | 5,31 | 3,93 | 2,56 | 1,57 | 0 |
| | lbf ft/psi | 1.12 | 1.06 | 1.00 | 0.94 | 0.87 | 0.81 | 0.74 | 0.67 | 0.61 | 0.54 | 0.47 | 0.40 | 0.33 | 0.27 | 0.20 | 0.13 | 0.08 | 0 |
| Max. continuous speed | r/min | 300 | 315 | 335 | 360 | 385 | 415 | 450 | 490 | 540 | 600 | 600 | 600 | 600 | 600 | 600 | 600 | 600 | 1000 |
| Max. continuous output | kW | 112 | 109 | 105 | 103 | 100 | 96 | 93 | 89 | 85 | 80 | 75 | 64 | 52 | 42 | 31 | 21 | 10 | 0 |
| | hp | 150 | 146 | 141 | 138 | 134 | 129 | 125 | 120 | 114 | 108 | 100 | 86 | 70 | 56 | 42 | 28 | 14 | 0 |
| Max. intermittent output | kW | 138 | 133 | 128 | 125 | 121 | 118 | 114 | 110 | 103 | 98 | 91 | 78 | 64 | 51 | 38 | 25 | 13 | 0 |
| | hp | 185 | 178 | 172 | 168 | 163 | 158 | 153 | 147 | 139 | 132 | 122 | 105 | 86 | 68 | 51 | 34 | 17 | 0 |
| Max. continuous pressure | bar | 250 | 250 | 250 | 250 | 250 | 250 | 250 | 250 | 250 | 250 | 250 | 250 | 250 | 250 | 250 | 250 | 250 | 17◆ |
| | psi | 3626 | 3626 | 3626 | 3626 | 3626 | 3626 | 3626 | 3626 | 3626 | 3626 | 3626 | 3626 | 3626 | 3626 | 3626 | 3626 | 3626 | 250◆ |
| Max. intermittent pressure | bar | 275 | 275 | 275 | 275 | 275 | 275 | 275 | 275 | 275 | 275 | 275 | 275 | 275 | 275 | 275 | 275 | 275 | 17◆ |
| | psi | 4000 | 4000 | 4000 | 4000 | 4000 | 4000 | 4000 | 4000 | 4000 | 4000 | 4000 | 4000 | 4000 | 4000 | 4000 | 4000 | 4000 | 250◆ |

* *Intermediate displacements are available to special order.*

◆ *See "Small displacements" page 5 for information about higher pressure applications.*

**TABLE 2**

| Fluid type | Pressure, bar (psi) Continuous | Pressure, bar (psi) Intermittent | Max. speed r/min |
|---|---|---|---|
| HFA, 5/95% oil-in-water emulsion | 103 (1500) | 138 (2000) | 50% of limits for petroleum oil |
| HFB, 60/40% water-in-oil emulsion | 138 (2000) | 172 (2500) | As for petroleum oil |
| HFC, water glycol | 103 (1500) | 138 (2000) | 50% of limits for petroleum oil |
| HFD, phosphate ester | 250 (3626) | 275 (4000) | As for petroleum oil |

**RATING DEFINITIONS**

● CONTINUOUS RATING

For continuous duty the motor must be operating within each of the maximum values for speed, pressure and power as specified for each displacement code.

● INTERMITTENT RATING

Operation within the intermittent power rating (up to the maximum continuous speed) is permitted on a 15% duty basis, for periods up to 5 minutes maximum.

● INTERMITTENT MAX. PRESSURE

Up to 275 bar (4000 psi) is allowable on the following basis:

(a) Up to 50 r/min: 15% duty for periods up to 5 minutes maximum.

(b) Over 50 r/min: 2% duty for periods up to 30 seconds maximum.

## OUTPUT TORQUES

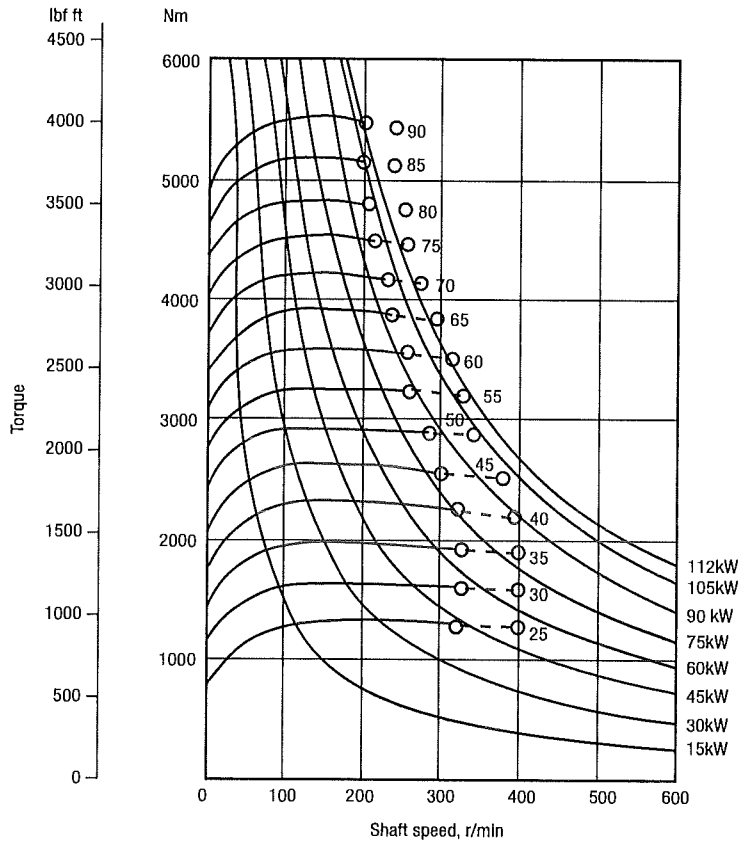


The torque curves indicate, for each displacement, the maximum output torque of the motor with an inlet pressure of 250 bar (3626 psi) and zero output pressure. High return line pressures will reduce the torque for any given pressure differential.

The solid line portion of each curve indicates the levels of maximum torque and speed that are permitted on a "continuous" basis.

The dotted portion of each curve indicates the levels of torque and speed at which the motor can operate at an "intermittent" rating.

The starting torques shown on the graph are average and will vary with crank angle.

## BEARING LIFE

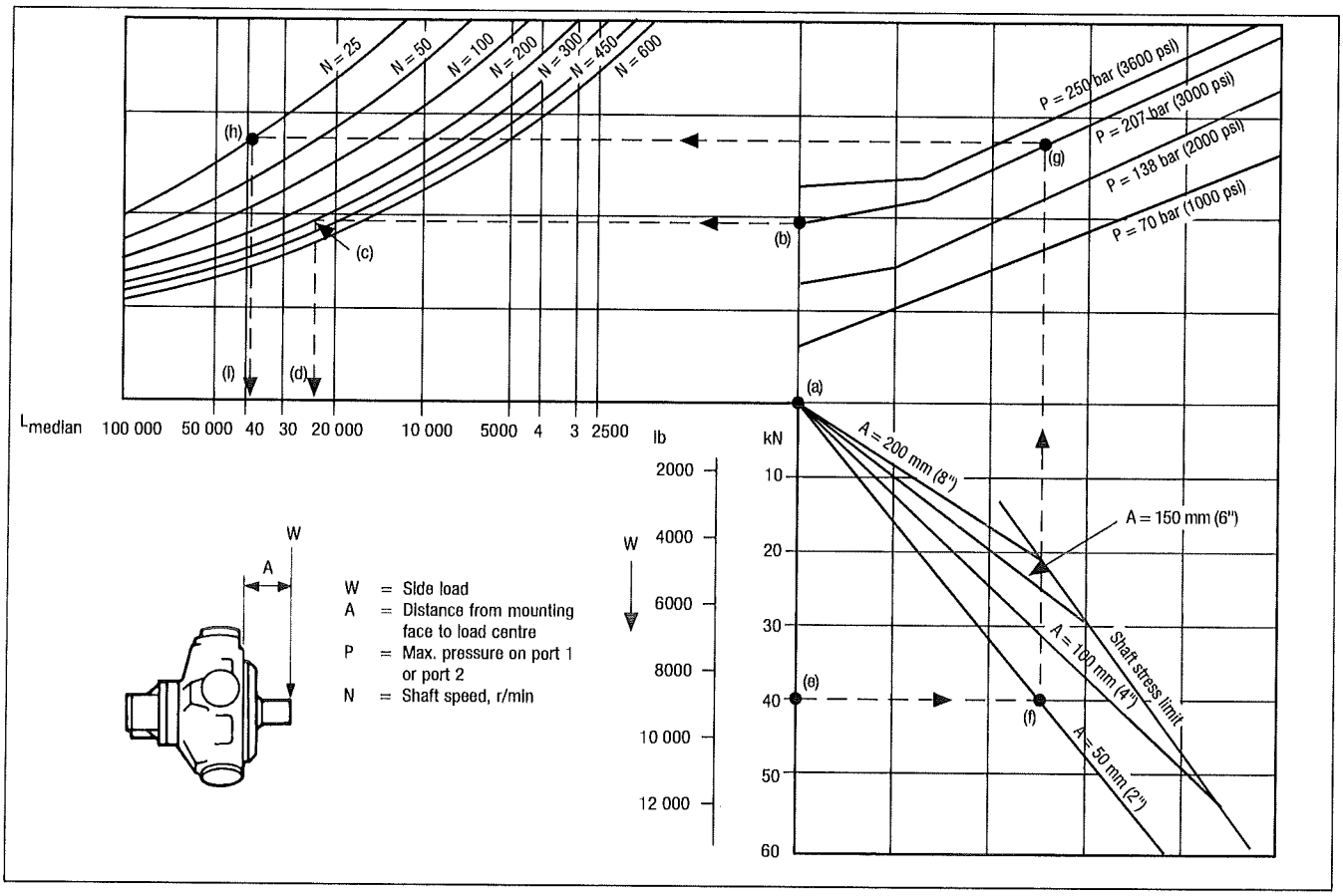


The nomograph allows the median ▲ bearing life to be determined for conditions of:

1. No side load and no axial thrust
2. Side load and no axial thrust

▲ *To determine L10 life predictions per ISO 281-1-1977 multiply the median figure by 0,2.*

For more precise life prediction, or where axial thrusts are incurred, a computer analysis can be provided by Kawasaki on receipt of machine duty cycle.

● SHAFT STRESS LIMIT
The shaft stress limit in the nomograph is based on the fatigue rating of shaft types "S" and "P"; for shaft type "Z" the shaft stress limit is approx. 20% higher. Infrequent loading above these limits may be permitted; consult Kawasaki.

| | HMC080 |
|---|---|
| Example 1 (follow chain dotted line): | |
| Side load (W) | a) 0 |
| System pressure (P) | b) 207 bar (3000 psi) |
| Speed (N) | c) 300 r/min |
| Median bearing life | d) 23 000 hrs |
| L10 bearing rating = median x 0.2 | 4600 hrs |
| Example 2 (follow chain dotted line): | |
| Side load (W) | e) 40 kN (9000 lbf) |
| Load offset (A) from motor mounting face | f) 50 mm (2.0 in) |
| System pressure (P) | g) 207 bar (3000 psi) |
| Speed (N) | h) 25 r/min |
| Median bearing life | i) 39 000 hrs |
| L10 bearing rating = median x 0.2 | 7800 hrs |

### VOLUMETRIC EFFICIENCY

This nomograph enables the average volumetric efficiency, crankcase (drain) leakage and "winch slip"/shaft creep speed to be estimated.

Example (follow chain dotted line):
Given:
1. Pressure .....175 bar (2500 psi)
2. Displacement code.....70 ($in^3$/r)
3. Speed .....300 r/min

To obtain:
4. Volumetric efficiency .....96.1%
5. Crankcase leakage .....7 l/min (430 $in^3$/min)
6. Shaft creep speed .....6,5 r/min

The shaft creep occurs when the load attempts to rotate the motor against closed ports as may occur, for example, in winch applications.

## VOLUMETRIC EFFICIENCY

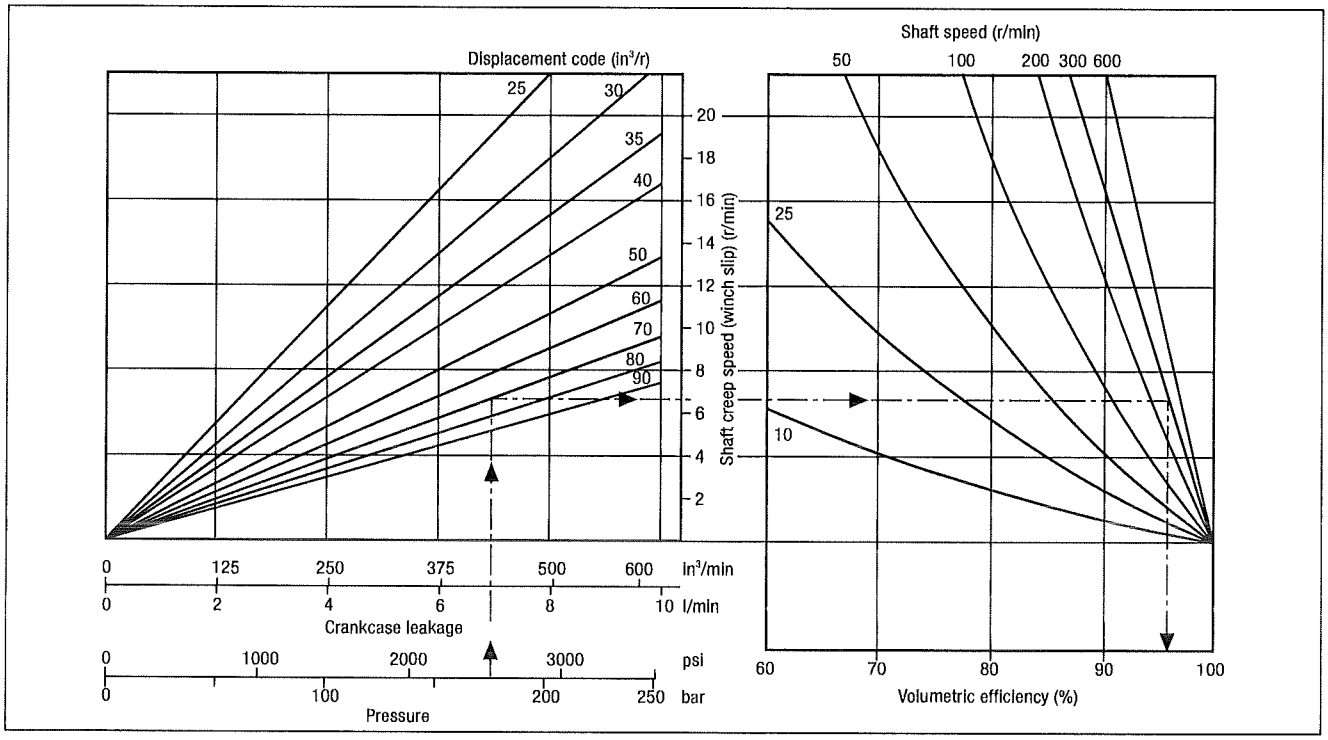


# 5. CIRCUIT AND APPLICATION NOTES

### DISPLACEMENT SELECTION

To select either displacement, a pressure at least equal to 2/3 of the motor inlet/outlet pressure (whichever is higher) is required. In most applications the motor inlet pressure will be used.

For inlet/outlet pressures below 3,5 bar (50 psi) a minimum control pressure of 3,5 bar (50 psi) is required. In the event of loss of control pressure the motor will shift to its highest displacement.

For rapid reversing applications it is recommended to externally source the control oil supply direct from the system pump (use displacement control type "X" or "C" - *not* "CS", "C1" or "C2" - in model code position **7**).

### STARTING TORQUES

The starting torques shown on the graph on page 3 are average and will vary with system parameters. For motors with low displacement below 25 in³ and starting under load it is recommended to select high displacement for start-up.

### LOW SPEED OPERATION

(High displacement mode)
Minimum operating speeds are determined by load conditions (load inertia, drive elasticity, etc.) For operation at speeds below 3 r/min consult Kawasaki.

### SMALL DISPLACEMENTS

(5 in³ and below)
The pressures given in the table on page 2 for displacement code "05" (and below) are based on 1000 r/min output shaft speed. These pressures can be increased for shaft speeds less than 1000 r/min; consult Kawasaki for details.

In addition to 5 in³, a zero swept volume displacement (for free wheeling requirements) is available on request, subject to Kawasaki approving the application.

### HIGH BACK PRESSURE

When both inlet and outlet ports are pressurized continuously, the lower pressure in one port must not exceed 70 bar (1000 psi). Consult Kawasaki on applications beyond this limit. Note that high back pressures reduce the effective torque output of the motor.

### BOOST PRESSURE

When operating as a motor the outlet pressure should equal or exceed the crankcase pressure. If pumping occurs (i.e. overrunning loads) then a positive pressure, "P", is required at the motor ports. Calculate "P" from:

$$P\ (\text{bar}) = 1 + \frac{N^2 \times V^2}{1{,}6 \times 10^{10}} + C\ \text{bar}$$

$$P\ (\text{psi}) = P\ (\text{bar}) \times 14.5$$

Where:
N = speed, r/min
C = crankcase pressure, bar
V = displacement, cm³/r

The flow rate of oil needed for the make-up system can be estimated from the crankcase leakage figure (see Volumetric Efficiency graph above) plus an allowance for changing displacement; e.g. to change high to low in 0,25 sec requires 32 l/min (8.4 USgpm).

Allowance should be made for other system losses and also for "fair wear and tear" during the life of the motor, pump and other system components.

**COOLING FLOW**
Operation within the continuous ratings does not require any additional cooling.

For operating conditions above "continuous", up to the "intermittent" ratings, additional cooling oil may be required. This can be introduced through the spare crankcase drain holes, or in special cases through the valve spool end cap. Consult Kawasaki about such applications.

**MOTOR CASING PRESSURE**
With the standard shaft seal fitted, the motor casing pressure should not exceed 3,5 bar (50 psi). On installations with long drain lines a relief valve is recommended to prevent over-pressurizing the seal.

*Notes:*
1. *The casing pressure at all times must not exceed either the motor inlet or outlet pressure.*
2. *High pressure shaft seals are available to special order for casing pressures of:*
   *Continuous: 10 bar (150 psi)*
   *Intermittent: 15 bar (225 psi)*
3. *Check Installation dimensions (page 7) for maximum crankcase drain fitting depth.*

## 6. HYDRAULIC FLUIDS

Dependent on motor (see Model Code position **1**) suitable fluids include:
- Antiwear hydraulic oils.
- Phosphate esters (HFD fluids)
- Water glycols (HFC fluids)■
- 60/40% water-in-oil emulsions (HFB fluids)■
- 5/95% oil-in-water emulsions (HFA fluids)■

■ *Reduced pressure and speed limits, see page 3.*

Viscosity limits when using any fluid except oil-in-water (5/95) emulsions are:
Max. off load ..... 2000 cSt (9270 SUS)
Max. on load ..... 150 cSt (695 SUS)
Optimum ..... 50 cSt (232 SUS)
Minimum ..... 25 cSt (119 SUS)

**PETROLEUM OIL RECOMMENDATIONS**
The fluid should be a good hydraulic grade, non-detergent petroleum oil. It should contain anti-oxidant, anti-foam and demulsifying additives. It must contain antiwear or EP additives. Automatic transmission fluids and motor oils are not recommended.

## 7. TEMPERATURE LIMITS

Ambient min. .....-30°C (-22°F)
Ambient max. .....+70°C (158°F)
Max. operating temperature range

| | Petroleum oil | Water-containing |
|---|---|---|
| Min. | -20°C (-4°F) | +10°C (50°F) |
| Max.* | +80°C (175°F) | +54°C (130°F) |

* *To obtain optimum service life from both fluid and hydraulic system components, 65°C (150°F) normally is the maximum temperature except for water-containing fluids.*

## 8. FILTRATION

Full flow filtration (open circuit), or full boost flow filtration (closed circuit) to ensure system cleanliness to ISO 4406/1986 code 18/14 or cleaner.

## 9. NOISE LEVELS

The airborne noise level is less than 66.7 dB(A) DIN (70 dB(A) NFPA) throughout the "continuous" operating envelope.

Where noise is a critical factor, installation resonances can be reduced by isolating the motor by elastomeric means from the structure and the return line installation. Potential return line resonances originating from liquid borne noise can be further attenuated by providing a return line back pressure of 2 to 5 bar (30 to 70 psi).

## 10. POLAR MOMENT OF INERTIA

Typical data

| Displacement code | kg m² | lb in² |
|---|---|---|
| 90 | 0,052 | 180 |
| 45 | 0,044 | 150 |

## 11. MASS

Approx. all models: 172 kg (380 lb)

## 12. INSTALLATION DATA

**GENERAL**
● Spigot
The motor should be located by the mounting spigot on a flat, robust surface using correctly sized bolts. The diametral clearance between the motor spigot and the mounting must not exceed 0,15 mm (0.006"). If the application incurs shock loading, frequent reversing or high speed running, then high tensile bolts should be used, including one fitted bolt.

● Bolt torque
The recommended torque wrench setting for the M20 bolts is:
407±14 Nm (300±10 lbf ft)

● Shaft coupling
Where the motor is solidly coupled to a shaft having independent bearings the shafts must be aligned to within 0,13 mm (0.005") TIR.

**CRANKCASE DRAIN**

Motor axis horizontal

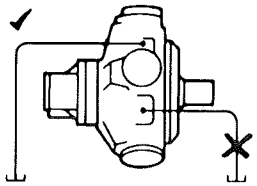

The crankcase drain must be taken from a position above the horizontal centre line of the motor.

Axis vertical, shaft up

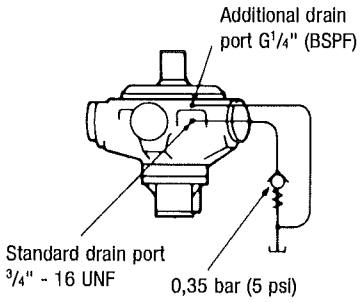


An additional G1/4" (BSPF) drain port in the front mounting flange is provided when the "V" (shaft vertically upwards) designator is given after the shaft type letter in position **3** of the model code. This additional drain should be connected into the main motor casing drain line downstream of a 0,35 bar (5 psi) check valve to ensure lubrication of the upper bearing. See above diagram.

Axis vertical, shaft down

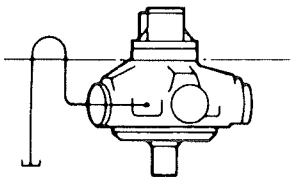

Use any drain position. The drain line should be run above the level of the uppermost bearing; if there is risk of syphoning then a syphon breaker should be fitted.

**START-UP**
Fill the crankcase with system fluid. Where practical, a short period (30 minutes) of "running in" should be carried out with the motor set to its high displacement (pressure to port Y, or to port B of the size 03 pilot valve).

## 13. INSTALLATION DIMENSIONS IN MM (INCHES)

**HMC080 MOTOR WITH TYPE "F3"/"FM3" MAIN PORTS CONNECTION**
See additional views for displacement control connections, all shaft types and alternative main port connections.

3rd angle projection

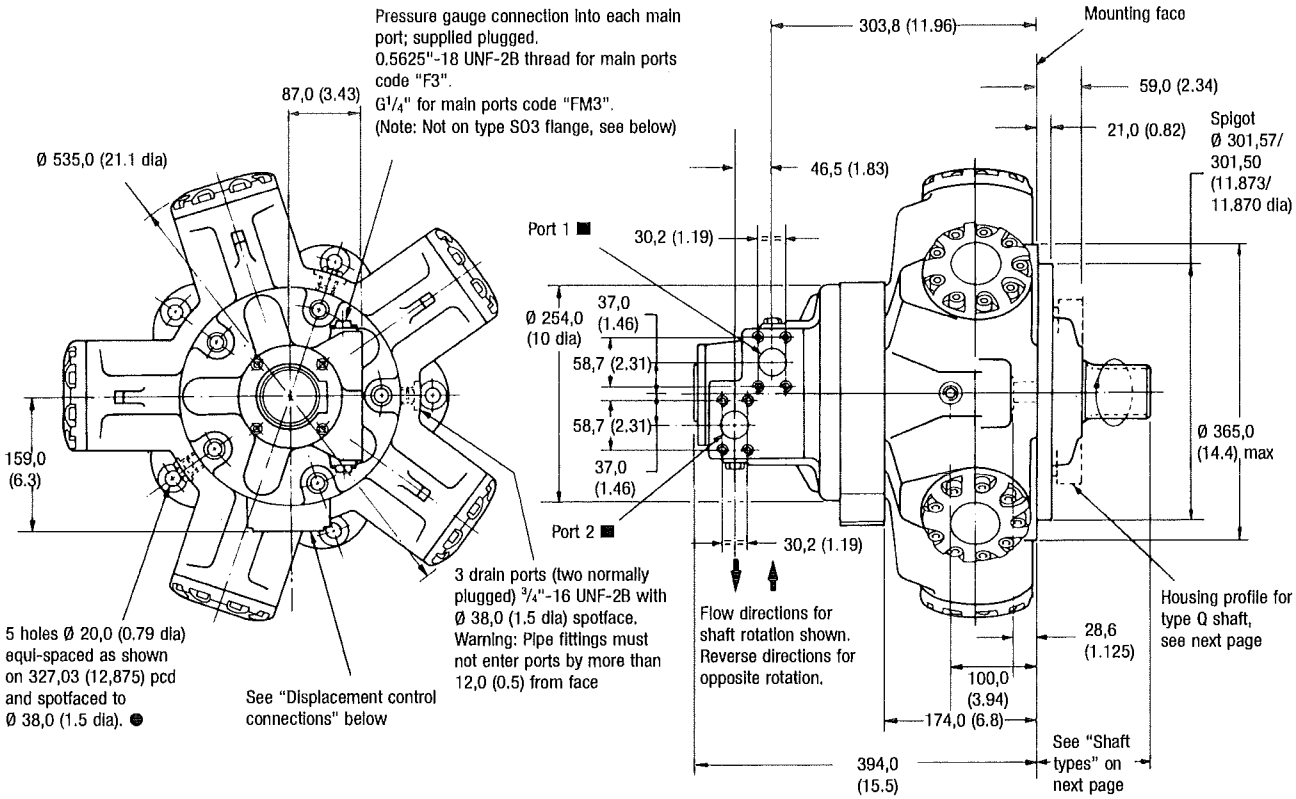


■ Port connection details (model code position 6)

| Symbol nominal size | Flange | Bolt tappings |
|---|---|---|
| F3 | 1 1/4" SAE 4-bolt flange | 7/16"-14 UNC-2B x 1.06" deep |
| FM3 | 1 1/4" SAE 4-bolt flange | M12-6H x 1,75 x 27,0 (1.06) deep |
| SO3 | Staffa 3" 6-bolt, see separate view below. | |

● *Suitable for M20 or 3/4" bolts. Maximum reaming diameter 21,0 (0.83) (for fitted bolt); see "Installation Data".*

## VALVE HOUSING WITH 3" 6-BOLT FLANGE, "S03" IN MODEL CODE POSITION 6

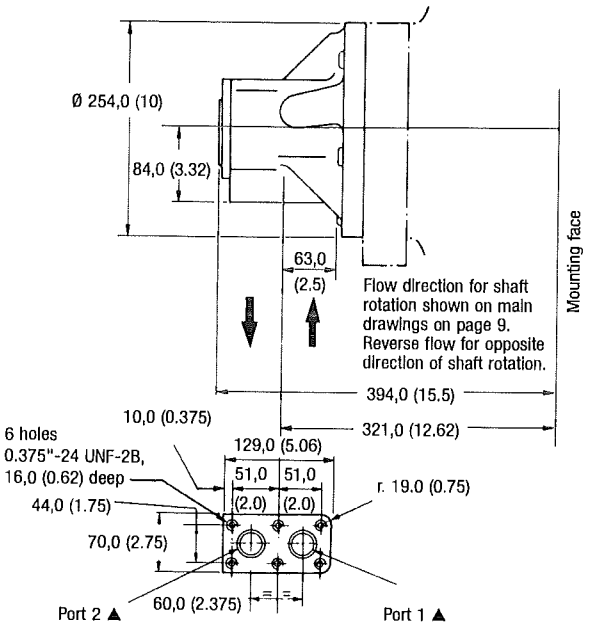


▲ *Ø 28 (1.125 dia) with recess for 31,0 (1.22) i/d x Ø 4 (0.157 dia) section O-ring*

## DISPLACEMENT CONTROL CONNECTIONS, MODEL CODE POSITION 7

**Type X**
**G¼" (BSPF) tapped ports X and Y**

Displacement selection (via remotely located valve ◆):
High displacement: P to Y; X to T
Low displacement: P to X; Y to T

**Types C, CS, C1 and C2**
**Mounting interface for directional control valve ◆ to: ISO 4401 size 03 ANSI/B93. 7M size D03**

Displacement selection:
High displacement: P to B; A to T
Low displacement: P to A; B to T

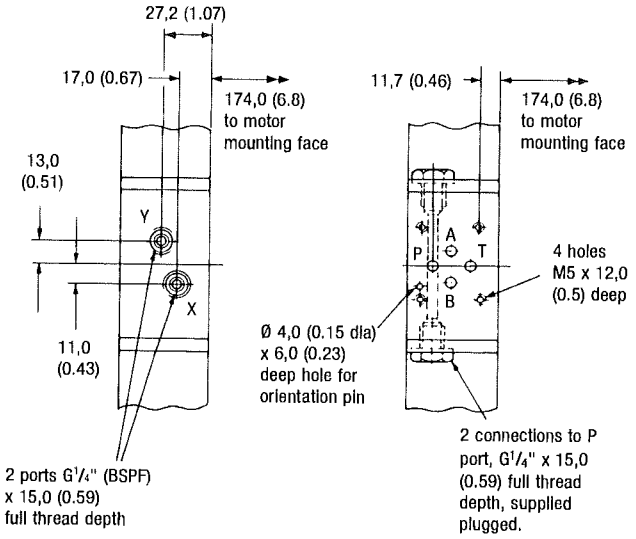


◆ *Displacement selector valve is not supplied with the motor; specify and order separately.*

## SHAFT TYPE "P", MODEL CODE POSITION 3

Straight shaft with rectangular key

**Warning:** *Maximum allowable torque for this shaft is 5400 Nm (3920 lbf ft)*

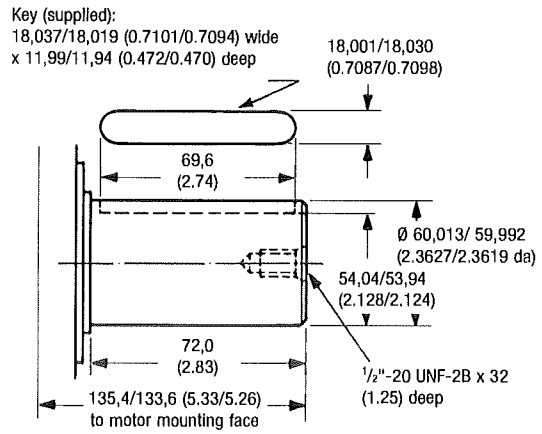


## SHAFT TYPE "S", MODEL CODE POSITION 3

Cylindrical shaft with 14 splines to BS 3550

## SHAFT TYPE "Z", MODEL CODE POSITION 3

Cylindrical shaft to DIN 5480

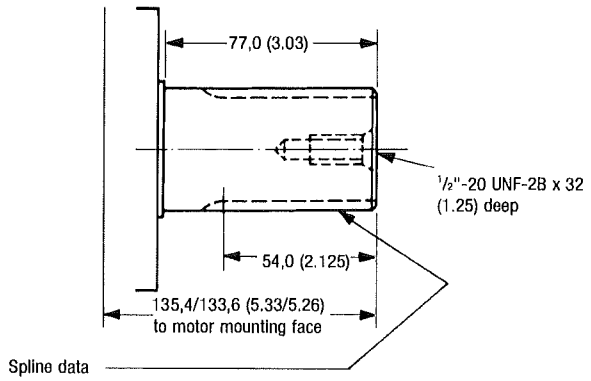


For type S shaft
To BS 3550/SAE J498c (ANSI B92.1-1970, class 5)
Flat root, side fit, class 1

| | |
|---|---|
| Pressure angle | 30° |
| Number of teeth | 14 |
| Pitch | 6/12 |
| Major diameter | 62,553/62,425 (2.4627/2.4577) |
| Form diameter | 55,052 (2.1674) |
| Minor diameter | 54,085/53,525 (2.1293/2.1073) |
| Pin diameter | 8,128 (0.3200) |
| Diameter over pins | 71,593/71,544 (2.8186/2.8167) |

For type Z shaft
DIN 5480, W70 x 3 x 22 x 7h

## SHAFT TYPE "Q", MODEL CODE POSITION 3

Female straight shaft with 24 splines to BS 3550

Note: The type "Q" shaft will transmit the maximum torques given on page 3. However, customers should ensure that their own mating shaft will transmit the torque required in their application.

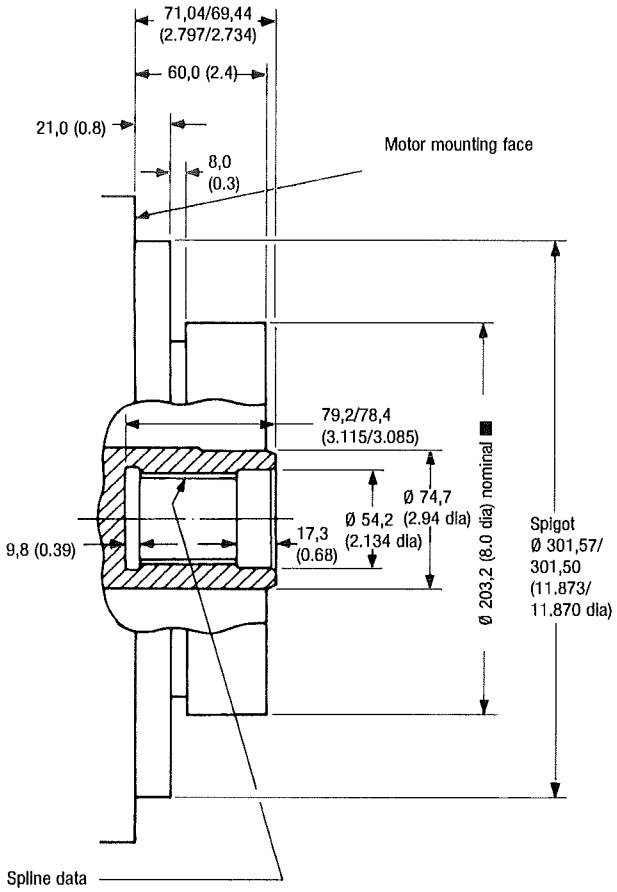


To BS 3550
Flat root, side fit, modified

| | |
|---|---|
| Pressure angle | 30° |
| Number of teeth | 24 |
| Pitch | 12/24 |
| Major diameter | 53,246/52,916 (2.0963/2.0833) |
| Minor diameter | 48,811/48,684 (1.9217/1.9167) |
| Pin diameter | 3,658 (0.1440) |
| Pin flatted to | 3,560 (0.1400) |
| Diameter over pins | 45,626/45,550 (1.7963/1.7933) |

■ *Use mounting face spigot for motor location*

Presented by:

**Kawasaki Motors Corp., U.S.A.**
**Precision Machinery Division**

5080 36th Street S.E., Grand Rapids, MI 49512 • USA
(616) 949-6500 • Fax (616) 975-3103

**www.kawasakipmd.com**

**Staffa hydraulic motors are manufactured to the highest quality standards in a Kawasaki ISO 9001 certified facility. Certification No. 891150**



The right to modification for technical improvement is reserved.

# REFERENCE 3. SERIES 20 PUMP LITERATURE

SAUER DANFOSS

# Series 20
# Axial Piston Pumps

## Technical Information

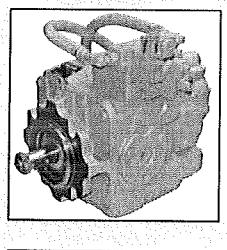

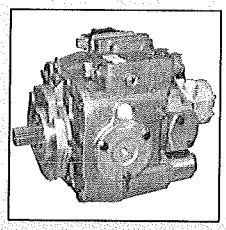

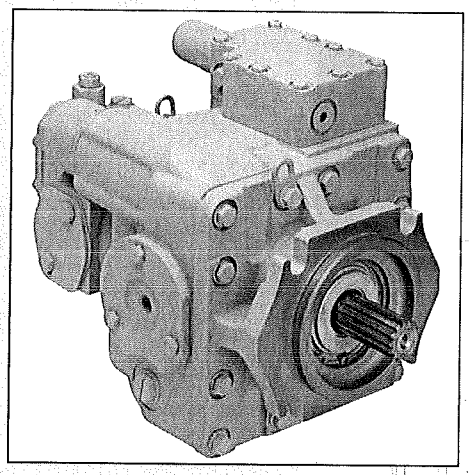

# Series 20 Axial Piston Pumps
# Technical Information
# General Description

## Introduction

Sauer-Danfoss a world leader in hydraulic power systems has developed a family of axial piston pumps.

## Description

Sauer-Danfoss axial piston variable displacement pumps are of swash plate design with variable flow capability suitable for hydrostatic transmissions with closed loop circuit. Tilting the swash plate to the opposite side of the neutral or zero displacement position reverses flow direction.

Sauer-Danfoss axial piston variable displacement pumps are well engineered and easy to handle.
The full-length shaft with a highly efficient tapered roller bearing arrangement offers a high loading capacity for external radical forces.
The hydro-mechanical servo displacement control maintains the selected swash plate position and hence pumps displacement.
Upon release of the control handle, the swash plate automatically returns to zero position and the flow reduces to zero.
High case pressures can be achieved without leakage even at the lowest temperatures by using suitable shaft seals.
The servo valve arrangement offers the facility to incorporate function regulators and remote control systems.
Axial piston units are designed for easy servicing. Complete dismantling and reassembly can be carried out with standard hand tools, and all components or sub-assemblies are replaceable.
Axial piston variable displacement pumps of the Sauer-Danfoss pattern are made by licensed producers worldwide, providing consistent service and fully interchangeable parts.

## Typical markets

- Industrial
- Mining
- Transit Mixer
- Utility Vehicles

© 2011 Sauer-Danfoss. All rights reserved.

Sauer-Danfoss accepts no responsibility for possible errors in catalogs, brochures and other printed material. Sauer -Danfoss reserves the right to alter its products without prior notice. This also applies to products already ordered provided that such alterations can be made without affecting agreed specifications. All trademarks in this material are properties of their respective owners. Sauer-Danfoss, the Sauer-Danfoss logotype, the Sauer-Danfoss S-icon, PLUS+1™, What really matters is inside® and Know-How in Motion™ are trademarks of the Sauer-Danfoss Group.

Front cover illustrations: F00S 104, F000 248, F000 1S0, F000 249

# Contents

**General Description**

Axial Piston Variable Displacement Pump ..... 4
Pump and Motor Circuit Description ..... 5
Pump circuit schematic ..... 5

**Technical Specification**

Technical Parameters ..... 6
- Design ..... 6
- Type of mounting ..... 6
- Pipe connections ..... 6
- Direction of rotation ..... 6
- Installation position ..... 6
- External drain fluid loss ..... 6

Hydraulic Parameters ..... 7
- System pressure range, input $p_1$ ..... 7
- System pressure range, output $p_2$ ..... 7
- Case pressure ..... 7
- Hydraulic fluids ..... 7
- Temperature range ..... 7
- Viscosity range ..... 7
- Filtration ..... 7
- Shaft load ..... 7

Hydraulic Parameters ..... 8
Determination of Nominal Pump Sizes ..... 8
- Based on SI units/Based on US units ..... 8

Servo Displacement Control (linear response) ..... 9
- Pump flow direction ..... 9
- Reversing time ..... 10
- Reset time ..... 11
- Changing reversing and reset time ..... 11

**Dimensions – Frame Size 070 and 089**

Configuration PS, displacement control VML 1 ..... 12
Configuration AA 010, displacement control VML 1 ..... 14

**Dimensions – Frame Size 334**

Configuration PS, displacement control VML 1 ..... 15
Configuration AA 010, displacement control VML 1 ..... 17

## Axial Piston Variable Displacement Pump

*Sectional View*

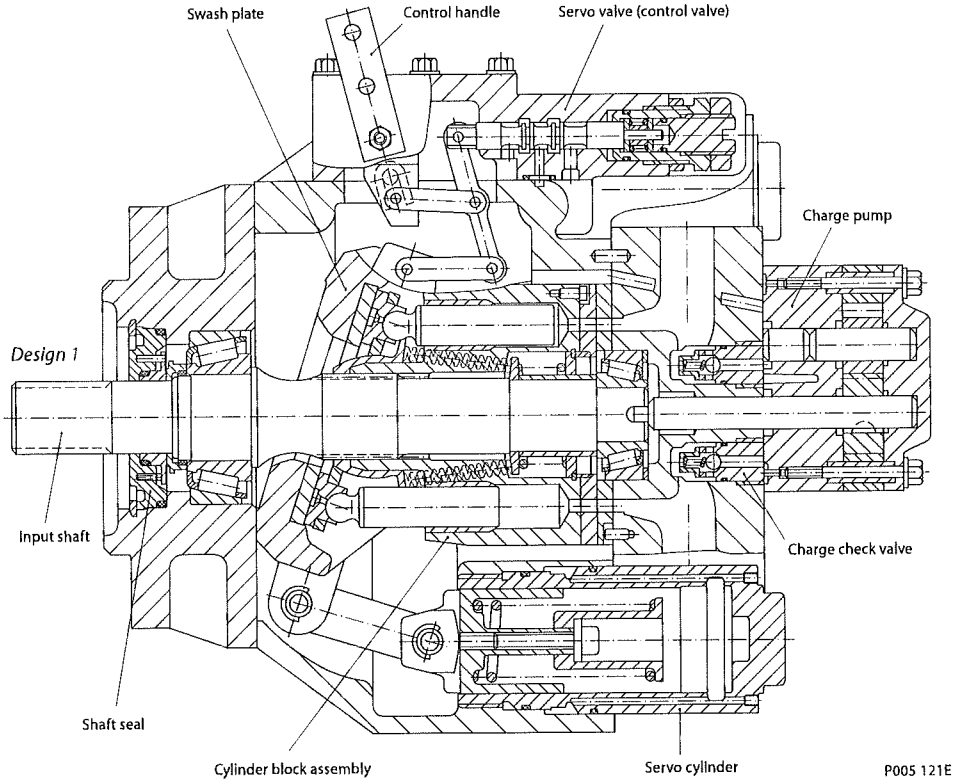


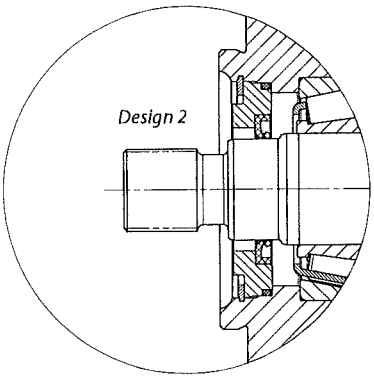

## Pump and Motor Circuit Description

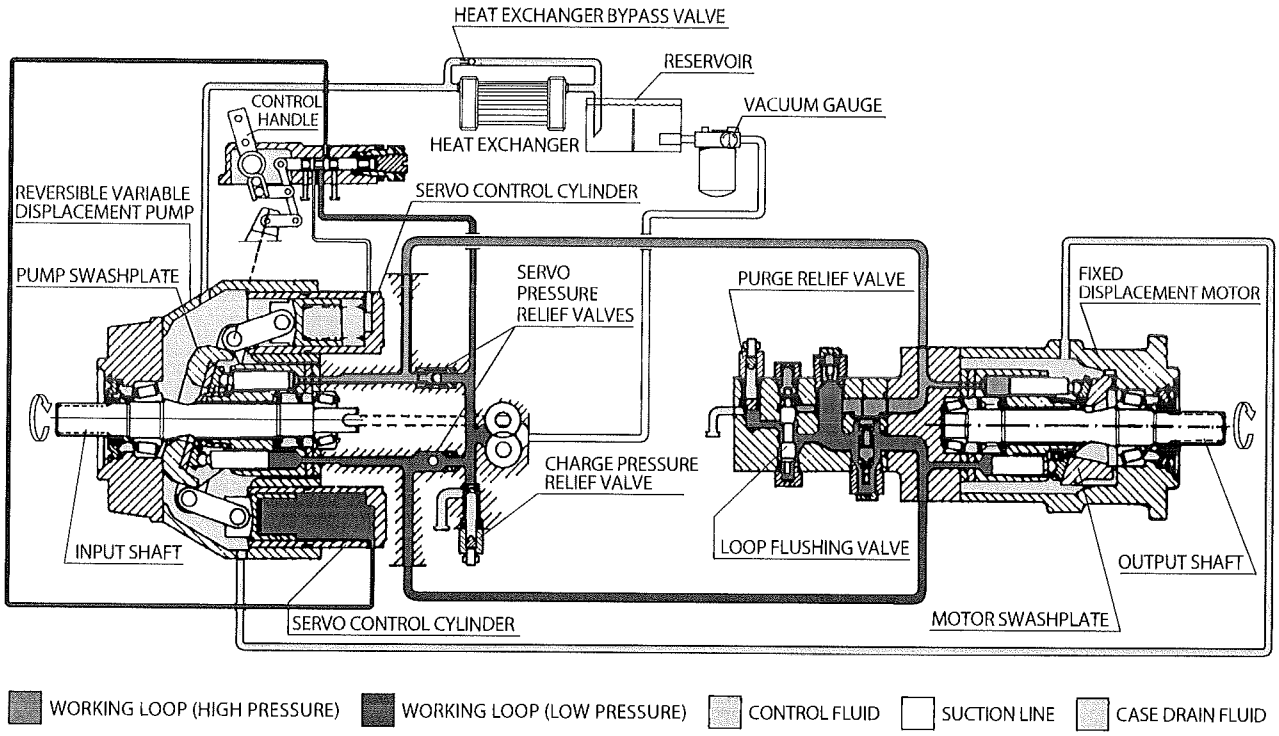


Above figure shows schematically the function of a hydrostatic transmission using an axial piston variable displacement pump and a fixed displacement motor.

## Pump Circuit Schematic

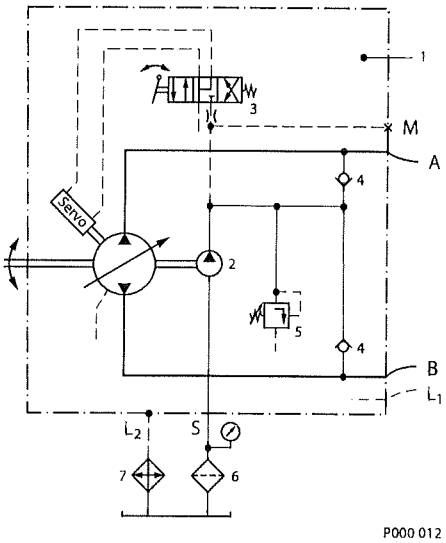


Designation:

| | | |
|---|---|---|
| 1 | = | Variable displacement pump |
| 2 | = | Charge pump |
| 3 | = | Servo control valve |
| 4 | = | Charge check valve |
| 5 | = | Charge relief valve |
| 6 | = | Filter |
| 7 | = | Heat exchanger |

Ports:

| | | |
|---|---|---|
| A, B | = | Main pressure ports (working loop) |
| S | = | Suction port - charge pump |
| L1 , L2 | = | Drain ports |
| M | = | Gauge port - charge pressure |

## Technical Parameters

**Design**
Axial piston pump of swash plate design, with variable displacement.

**Type of mounting**
SAE four bolt flanges.

**Pipe connections**
Main pressure ports: SAE split flange
Remaining ports: SAE O-ring boss

**Direction of rotation**
Clockwise or counterclockwise (viewing from the input shaft).

**Installation position**
Optional; pump housing must be always filled with hydraulic fluid.

**External drain fluid loss**

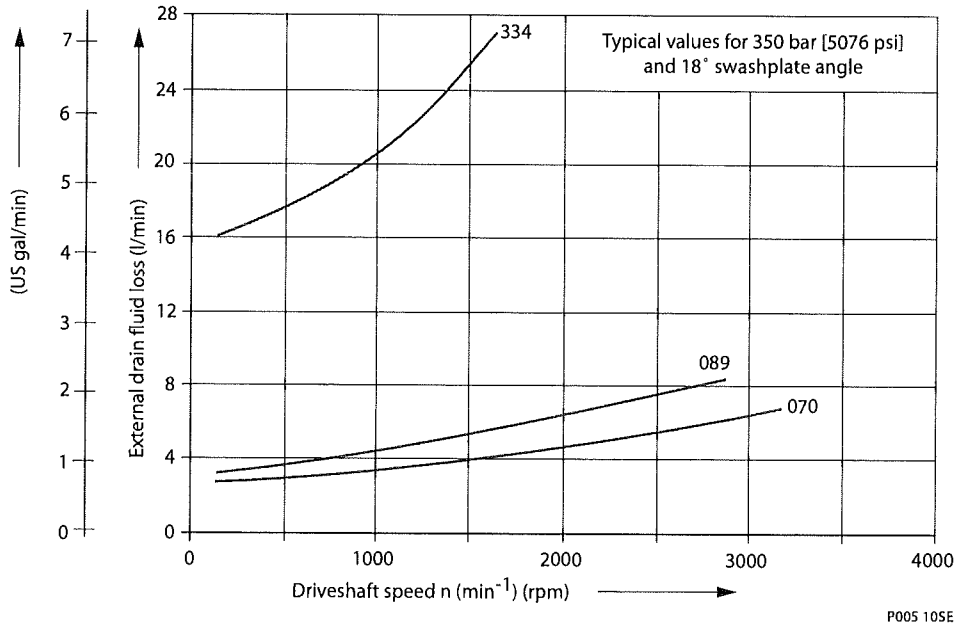

## Hydraulic Parameters

**System pressure range, input $p_1$**
Variable displacement pump:
Charge pressure nominal: 13 bar [189 psi] above case pressure
Charge pressure minimum: 8 bar [116 psi], intermittent only

Charge pump input pressure:
Min. allowable pressure, continuous = 0.75 bar [10.9 psi] absolute
Min. allowable pressure, intermittent = 0.50 bar [7.3 psi] absolute (for cold start)

Charge pump output pressure:
Max. operating pressure = 35 bar [508 psi] above case pressure

**System pressure range, output $p_2$**
Pressure on port A or B: Max. operating pressure $\Delta p$ = 420 bar [6092 psi]
Max. high pressure setting $\Delta p$ = 460 bar[1] [6672 psi]

[1]only with POR-valve

**Case pressure**
Max. rated pressure = 2.5 bar [36.3 psi]
Intermittent = 5.0 bar [72.5 psi]

**Hydraulic fluids**
Refer to Sauer-Danfoss publications *Hydraulic Fluids and Lubricants*, **520L0463** and *Experience with Biodegradable Hydraulic Fluids*, **520L0465**.

**Temperature range**
$\vartheta_{min}$ = - 40 °C [- 40 °F]
$\vartheta_{max}$ = 95 °C [203 °F]

**Viscosity range**
$v_{min}$ = 7 mm²/s [49 SUS*]
$v_{max}$ = 1000 mm²/s [4630 SUS*] (intermittent cold start)
Recommended viscosity range: 12 - 60 mm²/s [66 - 280 SUS*]

*SUS (Saybolt Universal Second)

**Filtration**
Required cleanliness level: ISO 4406 - 1999 Code 22/18/13 or better. Refer to Sauer-Danfoss publication *Hydraulic Fluids and Lubricants*, **520L0463** and *Design Guideline for Hydraulic Fluid Cleanliness*, **520L0467**.

**Shaft load**
The pump will accept radial and axial loads on its shaft, the maximum capacity being determined by direction and point of application of the load. Please contact your Sauer-Danfoss representative.

## Hydraulic Parameters (continued)

*Technical Data*

| Parameter | | Units | Frame size 070 | 089 | 334 |
|---|---|---|---|---|---|
| Max. displacement | | $cm^3$ [$in^3$] | 69.8 [4.26] | 89.0 [5.43] | 333.7 [20.36] |
| Charge pump displacement | options | $cm^3$ [$in^3$] | 18.03 [1.10] | | 65.50 [4.00] |
| | | | 12.30 [0.75] | | – |
| Minimum speed | | $min^{-1}$ (rpm) | 500 | | |
| Rated speed 1 | | $min^{-1}$ (rpm) | 3200 | 2900 | 1900 |
| Maximum swash plate angle | | degree | ±18 | | |
| Mass moment of inertia of rotating group (without charge pump) | | kg $m^2 \cdot 10^{-3}$ [lbf $ft^2 \cdot 10^{-3}$] | 12.34 [292.8] | 17.77 [421.7] | 161.40 [3830.0] |
| Weight | | kg [lb] | 63 [139] | 78 [172] | 270 [595] |

[1] for higher speeds contact your Sauer–Danfoss representative.

## Determination of Nominal Pump Sizes

Use these formulae to determine the nominal pump size for a specific application:

**Based on SI units**

*Output flow:* $$Q = \frac{Vg \cdot n \cdot \eta_v}{1000} \quad \text{l/min}$$

*Input torque:* $$M = \frac{Vg \cdot \Delta p}{20 \cdot \pi \cdot \eta_m} \quad \text{N•m}$$

*Input power:* $$P = \frac{M \cdot n}{9550} = \frac{Q \cdot \Delta p}{600 \cdot \eta_t} \quad \text{kW}$$

**Based on US units**

$$Q = \frac{Vg \cdot n \cdot \eta_v}{231} \quad \text{[US gal/min]}$$

$$M = \frac{Vg \cdot \Delta p}{2 \cdot \pi \cdot \eta_m} \quad \text{[lbf•in]}$$

$$P = \frac{M \cdot n}{63.025} = \frac{Q \cdot \Delta p}{1714 \cdot \eta_t} \quad \text{[hp]}$$

*Variables:* SI units [US units]

| | | | |
|---|---|---|---|
| $V_g$ | = | Displacement per rev. | $cm^3$/rev [$in^3$/rev] |
| $p_{HD}$ | = | Outlet pressure | bar [psi] |
| $p_{ND}$ | = | Inlet pressure | bar [psi] |
| $\Delta p$ | = | $p_{HD} - p_{ND}$ | bar [psi] |
| n | = | Speed | $min^{-1}$ (rpm) |
| $\eta_v$ | = | Volumetric efficiency | |
| $\eta_m$ | = | Mechanical (torque) efficiency | |
| $\eta_t$ | = | Overall efficiency ($\eta_v \cdot \eta_m$) | |

**Servo Displacement Control (linear response)**

Regulated by the control handle on the servo valve, the swash plate can be infinitely varied in both directions with the help of the servo system. The pump displacement resulting from any control handle position can be established using the figures on this page.
The angle of the control handle for stroke initiation and for the final position of the stroke can vary from unit to unit within the range of the tolerance band.
The inter-relation of flow direction, rotation of the pump and the control handle movement is shown below.

**Pump flow direction**
Flow direction changes with the direction of rotation and the control handle movement (see *besides*).

| Pump rotation | Movement of control handle in direction | Pressure port OUT | Pressure port IN |
|---|---|---|---|
| CCW (Left) | C | B | A |
| | D | A | B |
| CW (Right) | C | A | B |
| | D | B | A |

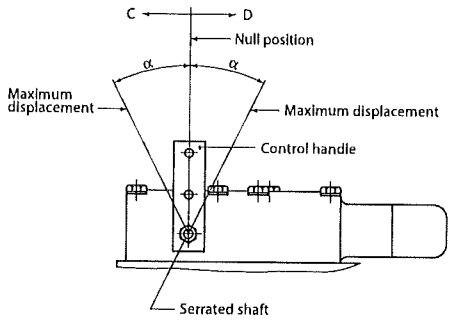

P000 013E

*SPV2/070*

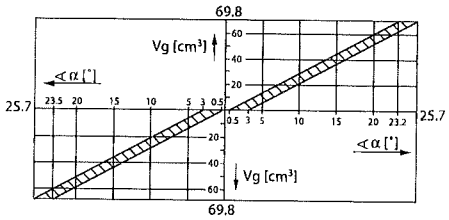

P000 016

*SPV2/089*

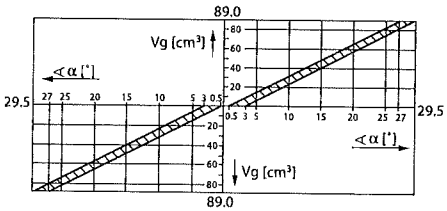

P000 017

*SPV2/334*

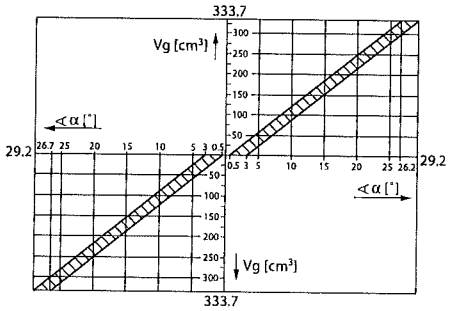

P000 021

**Servo Displacement Control (linear response) (continued)**

**Reversing time**

Time for the directional change of the flow from $Q_{max}$, across zero to $Q_{max}$, depending on the size of the control orifice fitted in the supply port to the servo valve (see *below*).

The values given assume movement of the control handle directly from one end position to the other.

Adjustment time of handle: < minimum reserving time
Operating pressure: $\Delta p_2$ = 210 bar [3046 psi]
Speed: n = 1450 $min^{-1}$ (rpm)
System temperature: 50 °C [122 °F]
Viscosity: 35 $mm^2/s$ [164 SUS]

| Frame size | Minimum reversing time (s) without orifice | Maximum reversing time (s) with orifice Ø 0.66 in supply port |
|---|---|---|
| 070 | 1.0 | 9.3 |
| 089 | 1.1 | 9.0 |
| 334 | 5.6 | 43.8 |

*Schematic diagram of servo valve with alternative orifice positions*

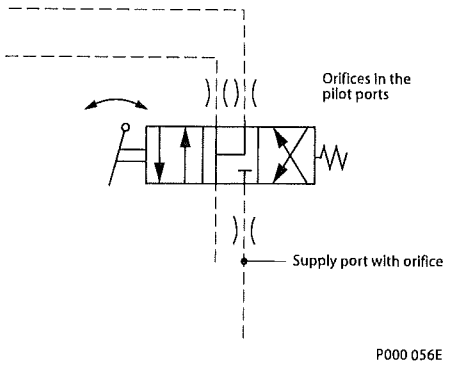

**Servo Displacement Control (linear response) (continued)**

**Reset time**

Time for reducing the flow from either flow direction from $Q_{max}$ to 0 releasing the control handle.
Assuming no mechanical blockage of the control handle's free return and assuming no orifices in the pilot ports:

| | |
|---|---|
| Operating pressure: | $\Delta p_2$ = 210 bar [3046 psi] |
| System temperature: | 50 °C [122 ° F] |
| Viscosity: | 35 mm²/s [164 SUS] |

*Servo valve counter bored recesses for orifice insert*

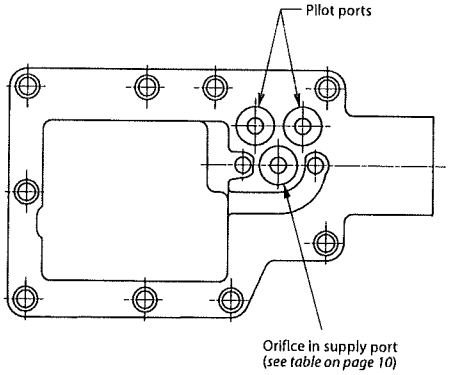


| Frame size | Minimum reset time (s) |
|---|---|
| 070 | 3.0 |
| 089 | |
| 334 | 5.4 |

**Changing reversing and reset time**

Inserting one orifice in each of the pilot ports can extend the reversing time. The reset time will also be extended.

Inserting an orifice in one of the pilot ports only can extend the reversing time in one flow direction. The reset time will be extended only for this flow direction.

**Configuration PS, displacement control VML 1**

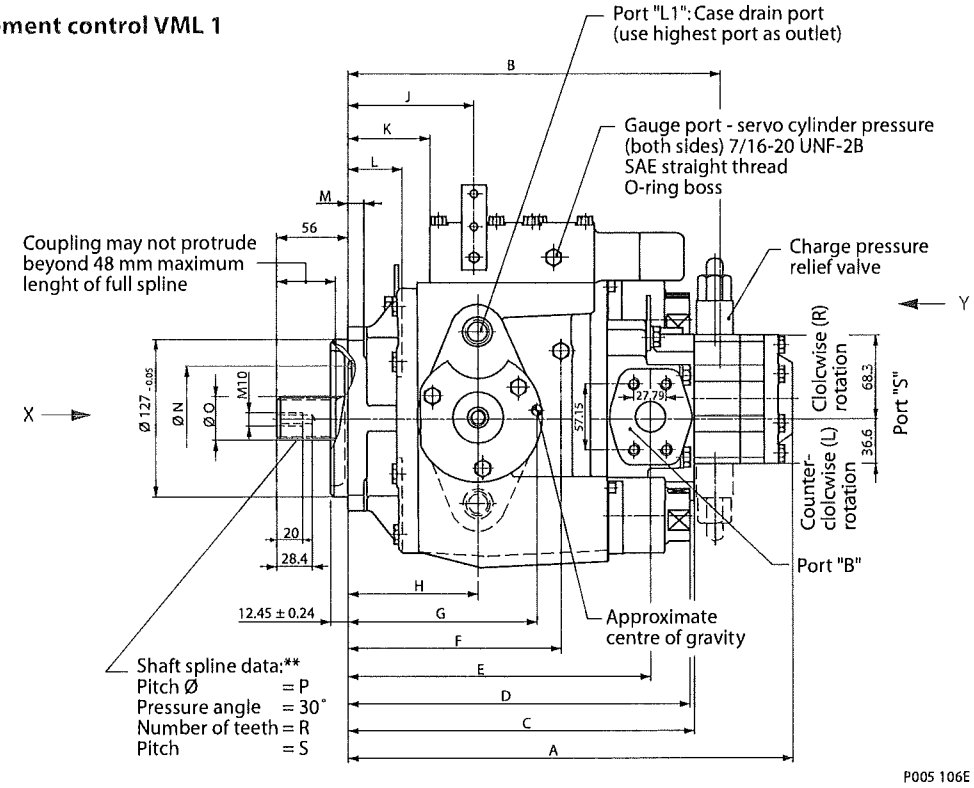


* Minimum and maximum angle α, (see section *Servo displacement control*).
** Shaft spline data: spline shaft with involute spline, according to SAE handbook, 1963, class 1, fillet root side fit.

*Dimensions - mm [in]*

| Frame size | B | C | D | E | F | G | H | J | K | L | M | Ø N |
|---|---|---|---|---|---|---|---|---|---|---|---|---|
| 070 | 315 [12.402] | 294 [11.575] | 305 [12.008] | 259 [10.197] | 188 [7.402] | 146 [5.748] | 112 [4.409] | 120 [4.724] | 84 [3.307] | 48 [1.890] | 16 [0.630] | 84 [3.307] |
| 089 | 328 [12.913] | 307 [12.087] | 312 12.283] | 271 [10.669] | 195 [7.677] | 140 [5.512] | 118 [4.646] | 129 [5.079] | 91 [3.583] | 49 [1.929] | 17.5 [0.689] | 98 [3.858] |

| Frame size | A[1] Charge pump 12 cm³ | A[1] Charge pump 18 cm³ | Shaft spline Ø O | Shaft spline Ø P | Shaft spline R | Shaft spline S | Bore Ø for shaft coupling |
|---|---|---|---|---|---|---|---|
| 070 | 372 [14.646] | 381 [15.000] | $34.50_{-0.17}$ [$1.358_{-0.0067}$] | 33.338 [1.313] | 21 [0.827] | 16/32 | $31.75^{+0.062}$ [$1.250^{+0.0024}$] |
| 089 | 358 [14.094] | 394 [15.512] | $37.68_{-0.17}$ [$1.483_{-0.0067}$] | 36.513 [1.438] | 23 [0.906] | 16/32 | $34.95^{+0.062}$ [$1.376^{+0.0024}$] |

[1] Short version available on request. Please contact your local Sauer-Danfoss representative.

*Dimensions - mm [in]*

| Frame size | T | U | V | W | X | Y | Z |
|---|---|---|---|---|---|---|---|
| 070 | 71.4 [2.811] | 112.7 [4.437] | 105 [4.134] | 108 [4.252] | 60.5 [2.382] | 85.8 [3.378] | 9.5 [0.374] |
| 089 | 77.7 [3.059] | 128.7 [5.067] | 115 [4.528] | 119 [4.685] | 65 [2.559] | 95.2 [3.748] | 12.7 [0.500] |

## Configuration PS, displacement control VML 1 (continued)

**View X (for SPV 2/070 only)**

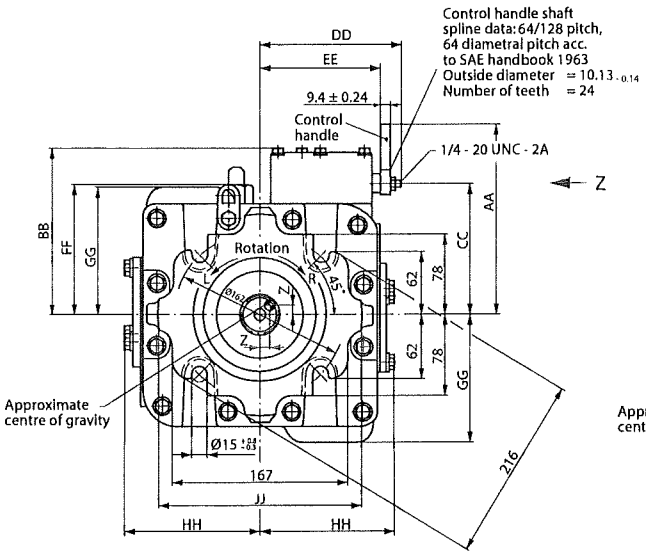


**View X (for SPV 2/089 only)**

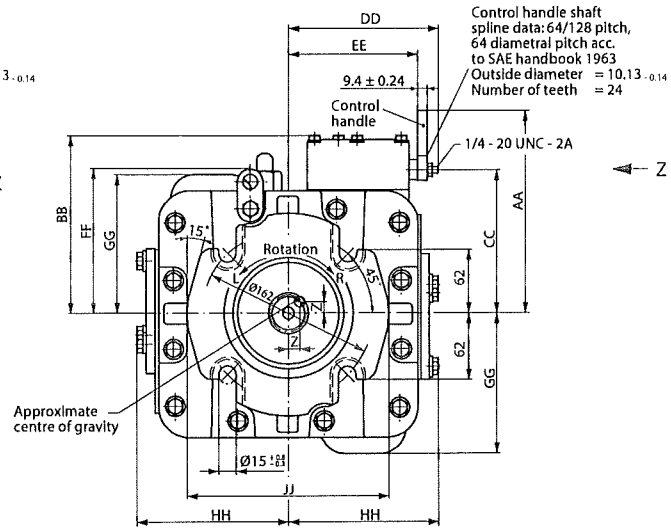


P005 108E

| Frame size | AA | BB | CC | DD | EE | FF | GG | HH | JJ |
|---|---|---|---|---|---|---|---|---|---|
| 070 | 187.6 [7.386] | 162 [6.378] | 128.6 [5.063] | 133 [5.236] | 113 [4.449] | 126 [4.961] | 123 [4.843] | 130 [5.118] | 194 [7.638] |
| 089 | 198.6 [7.819] | 173 [6.811] | 139.6 [5.496] | 144 [5.669] | 123 [4.843] | 140 [5.512] | 134 [5.276] | 148 [5.827] | 194 [7.638] |

**View Y**

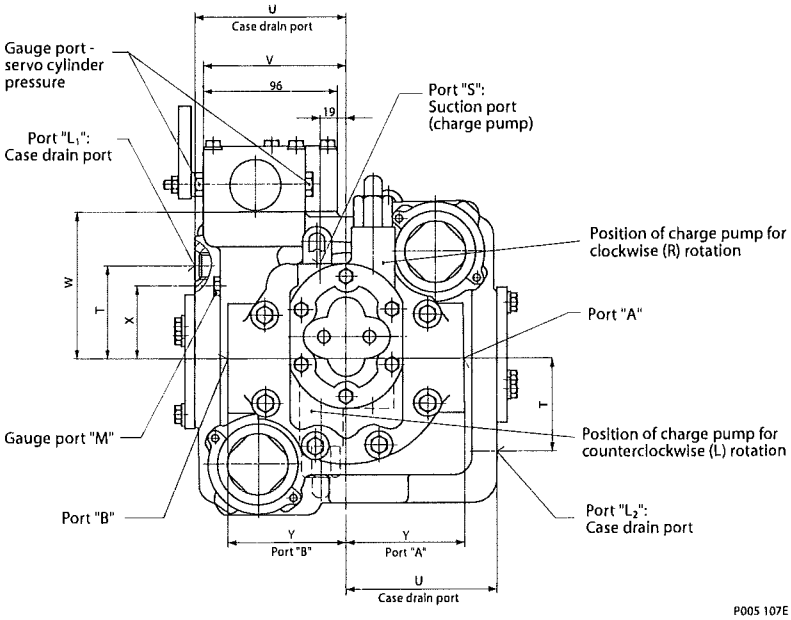


P005 107E

**View Z**

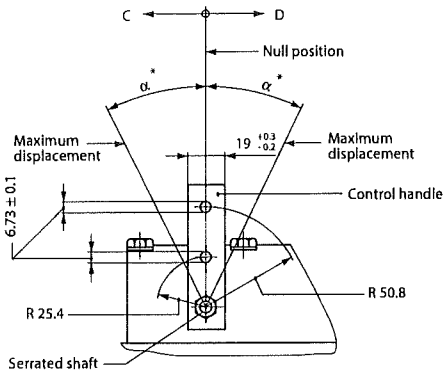


P000 022E

## Configuration AA 010, displacement control VML 1

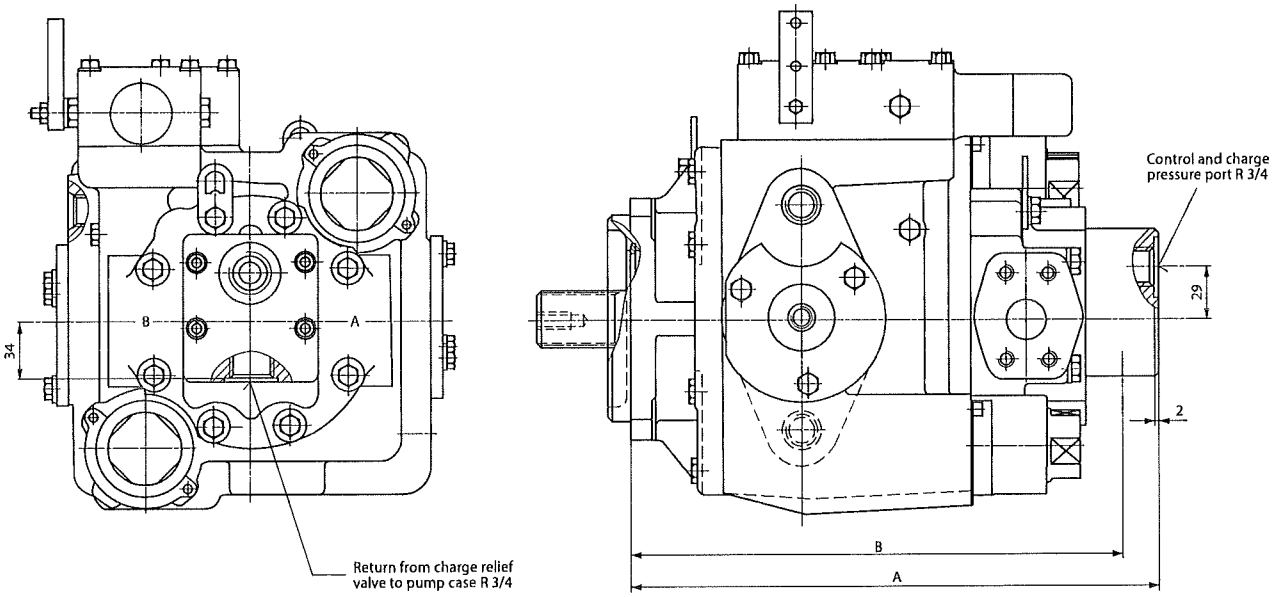


*Dimensions - mm [in]*

| Frame Size | A | B | Weight kg [lb] |
|---|---|---|---|
| 070 | 339 [13.346] | 316 [12.441] | 63.5 [140] |
| 089 | 352 [13.858] | 329 [12.953] | 78.5 [173] |

*Circuit schematic*

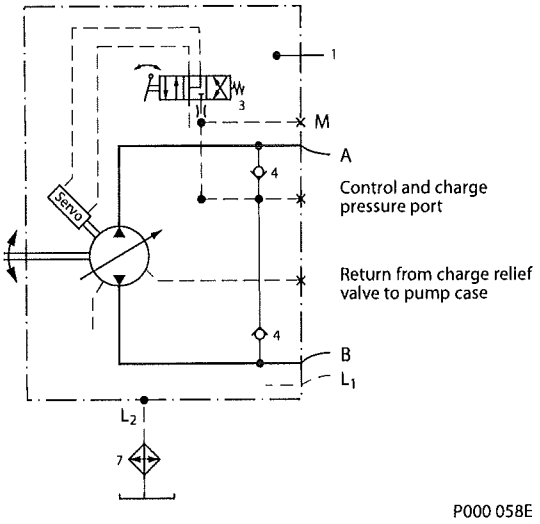


Designation:
1 = Variable Displacement pump
3 = Servo control valve
4 = Charge check valve
7 = Heat exchanger

Ports:
A, B = Main pressure ports (working loop)
L1, L2 = Drain ports
M = Gauge port - charge pressure

**Configuration PS, displacement control VML 1**

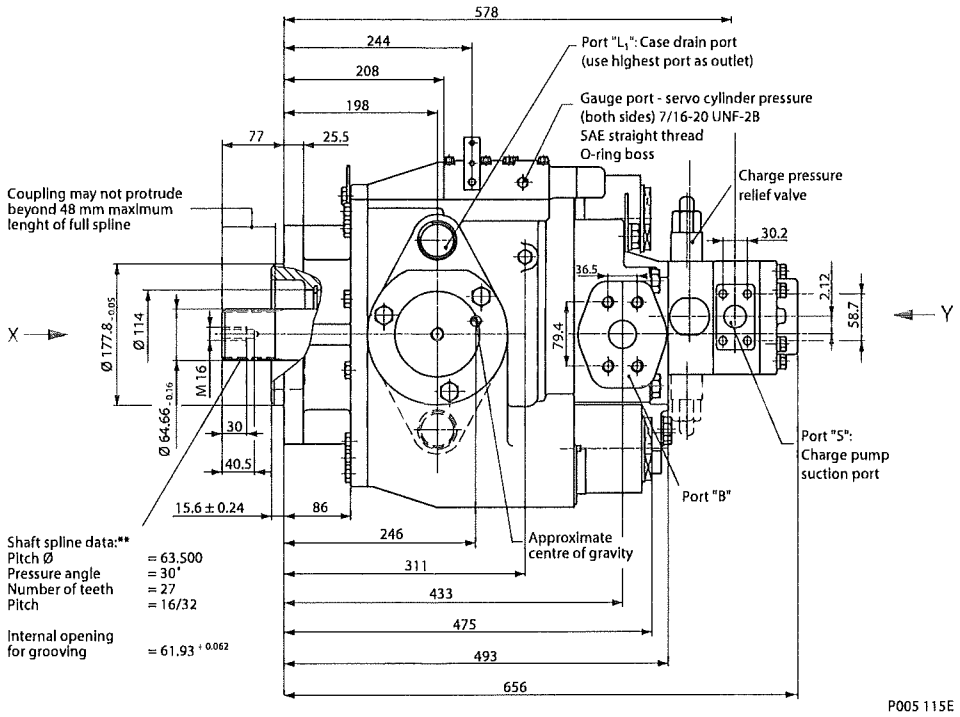


* Minimum and maximum angle α, (see section *servo displacement control*).
** Shaft spline data: spline shaft with involute spline, according to SAE handbook, 1963, class 1, fillet root side fit.

## Configuration PS, displacement control VML 1 (continued)

**View Y**

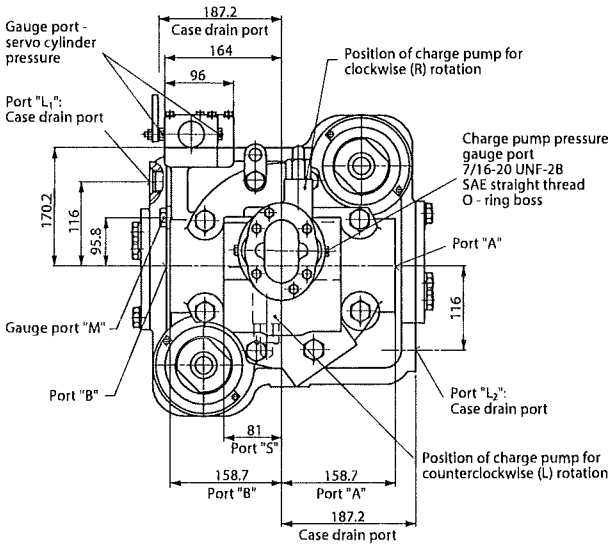


**View X**

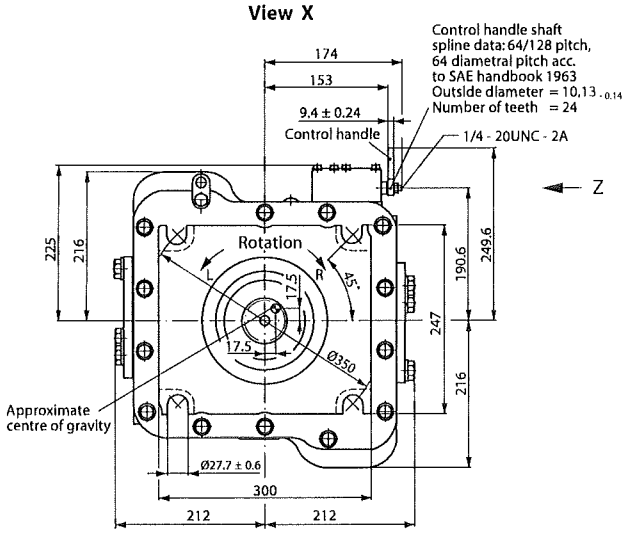


P005 111E

**View Z**

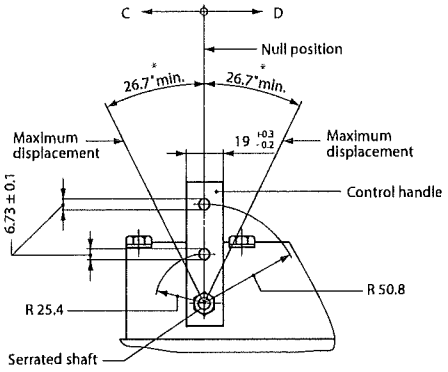


P000 026E

**Port A and B:** SAE flange, size 1 1/2 SAE split flange boss, 6000 psi, 4 threads, 5/8-11 UNC-2B, 35 deep
**Port L1, L2:** 1 7/8-12 UNF-2B, SAE straight thread, O-ring boss
**Port S:** SAE flange, 1 1/4 SAE split flange boss, 3000 psi, 4 threads, 7/16-14 UNC-2B, 28 deep
**Port M:** 7/16-20 UNF-2B, SAE straight thread, O-ring boss

**Configuration AA 010, displacement control VML 1**

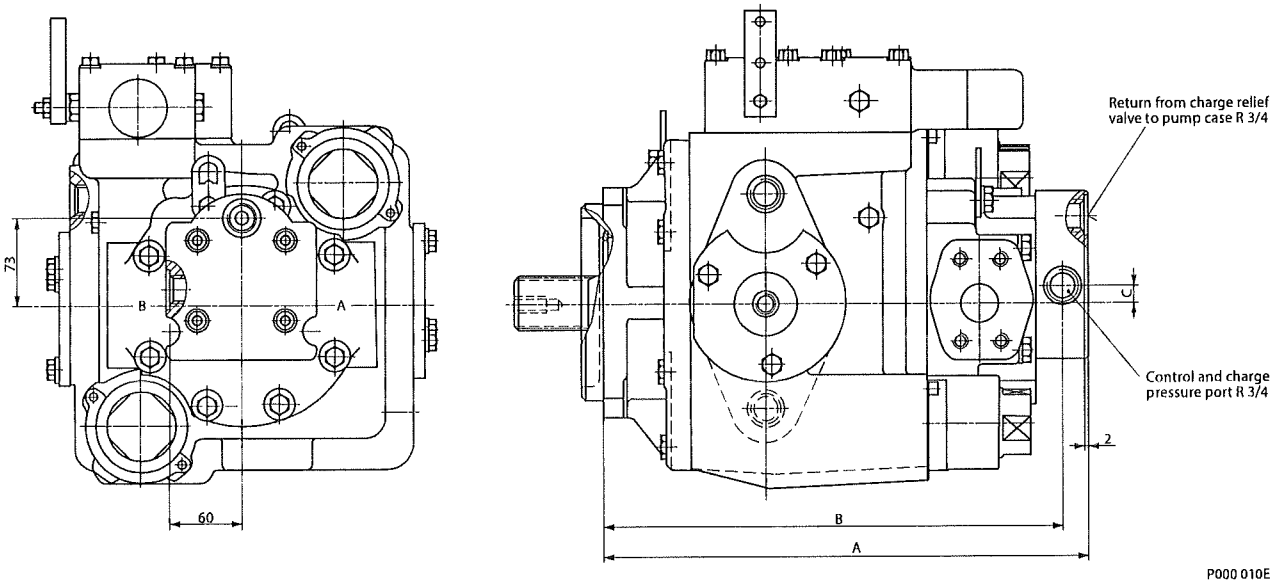


*Dimensions - mm [in]*

| Frame size | A | B | C | Weight kg [lb] |
|---|---|---|---|---|
| **334** | 546 [21.496] | 520 [20.472] | 21 [0.827] | 264.5 [583] |

*Circuit schematic*

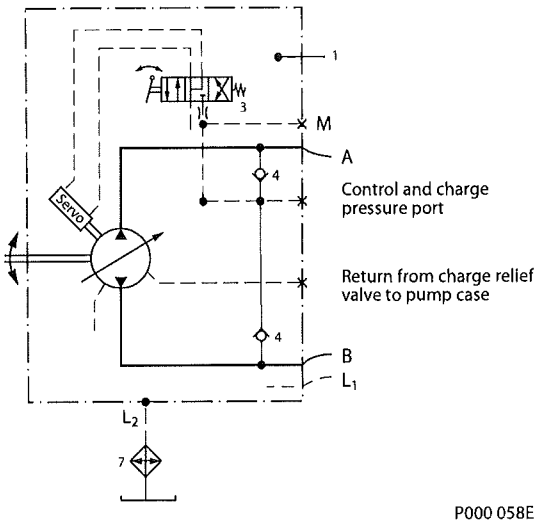


Designation:
1 = Variable Displacement pump
3 = Servo control valve
4 = Charge check valve
7 = Heat exchanger

Ports:
A, B = Main pressure ports (working loop)
L1, L2 = Drain ports
M = Gauge port - charge pressure

SAUER DANFOSS

**Products we offer:**

- Bent Axis Motors
- Closed Circuit Axial Piston Pumps and Motors
- Displays
- Electrohydraulic Power Steering
- Electrohydraulics
- Hydraulic Power Steering
- Integrated Systems
- Joysticks and Control Handles
- Microcontrollers and Software
- Open Circuit Axial Piston Pumps
- Orbital Motors
- PLUS+1™ GUIDE
- Proportional Valves
- Sensors
- Steering
- Transit Mixer Drives

**Members of the Sauer-Danfoss Group:**

**Comatrol**
www.comatrol.com

**Schwarzmüller-Inverter**
www.schwarzmueller-inverter.com

**Turolla**
www.turollaocg.com

**Hydro-Gear**
www.hydro-gear.com

**Sauer-Danfoss-Daikin**
www.sauer-danfoss-daikin.com

**L1003621** • Rev AB • Jan 2011

**Sauer-Danfoss** is a global manufacturer and supplier of high-quality hydraulic and electronic components. We specialize in providing state-of-the-art technology and solutions that excel in the harsh operating conditions of the mobile off-highway market. Building on our extensive applications expertise, we work closely with our customers to ensure exceptional performance for a broad range of off-highway vehicles.

We help OEMs around the world speed up system development, reduce costs and bring vehicles to market faster.
Sauer-Danfoss – Your Strongest Partner in Mobile Hydraulics.

**Go to www.sauer-danfoss.com for further product information.**

Wherever off-highway vehicles are at work, so is Sauer-Danfoss.

We offer expert worldwide support for our customers, ensuring the best possible solutions for outstanding performance. And with an extensive network of Global Service Partners, we also provide comprehensive global service for all of our components.

Please contact the Sauer-Danfoss representative nearest you.

Local address:

Sauer-Danfoss (US) Company
2800 East 13th Street
Ames, IA 50010, USA
Phone: +1 515 239 6000
Fax: +1 515 239 6618

Sauer-Danfoss ApS
DK-6430 Nordborg, Denmark
Phone: +45 7488 4444
Fax: +45 7488 4400

Sauer-Danfoss GmbH & Co. OHG
Postfach 2460, D-24531 Neumünster
Krokamp 35, D-24539 Neumünster, Germany
Phone: +49 4321 871 0
Fax: +49 4321 871 122

Sauer-Danfoss-Daikin LTD.
Shin-Osaka TERASAKI 3rd Bldg. 6F
1-5-28 Nishimiyahara, Yodogawa-ku
Osaka 532-0004, Japan
Phone: +81 6 6395 6066
Fax: +81 6 6395 8585

www.sauer-danfoss.com

# REFERENCE 4. MANRING PRELIMINARY REPORT

# THE WORLD TRADE CENTER TOWER-FOUR, LINKBELT 1900 LOST LOAD INCIDENT: INVESTIGATION OF PUMP AND MOTOR DAMAGE

A Preliminary Report Submitted by Noah Manring

March 3, 2012

## EXECUTIVE SUMMARY

This preliminary report provides a schematic of the main hoist system as it was being used during the lost load incident. The schematic has been created based upon the anecdotal information that was communicated during the pump and motor inspections that occurred at Federated Crane on March 1, 2012, along with the system description that is provided in the crane's operating manual, and the technical input of Thomas Kanzler who is the Chief Engineer at Federated Crane. Basic findings of the pump and motor inspection are also included in this preliminary report. A videographer was present to capture most of this inspection on video. The actual pumps and motors are still retained in a secure location and can be accessed for future inquiries. This report also describes six failure theories that could possibly be responsible for the lost load incident. These theories are listed in order of my preference with the first being related to a drop in charge pressure and pump control, facilitated by a hot system and a possible degradation of relief valves. The last two theories are somewhat unlikely but are listed as possibilities just the same. The conclusion of this report offers some suggested tests and activities that could be pursued to verify or refute the failure theories that are presented here. The appendix briefly describes the finding of miscellaneous inspections that have been carried out for another crane lost load incident.

DESCRIPTIONS

The main host hydraulic circuit and is shown in Figure 1. The following notes identify several components shown in the schematic:

| | |
|---|---|
| A | External charge pump |
| B | External charge pump filter |
| C | Bypass valve for the cooling circuit (normally open as shown) |
| D | Gearbox driven by the engine |
| E | Main hoist pump |
| F | Auxiliary hoist pump, connected to the main hoist circuit during the incident |
| G | Charge pump connected to the main hoist pump |
| H | Charge pump connected to the auxiliary hoist pump |
| I | Check valve |
| J | Charge circuit relief valve |
| K | Shuttle valve for the cooling circuit |
| L | Orifice for the cooling circuit |
| M | Cross over relief valve for lowering |
| N | Cross over relief valve for raising |
| O | Return line from the main and auxiliary pump case drain |
| P | Return filter inside the reservoir |
| 1 - 4 | Main hoist motors |

Other components of the main hoist hydraulic circuit are explicitly labeled in Figure 1. A few comments should be made:

1. The orifice for the cooling circuit labeled as L in the Figure 1 is not explicitly

described anywhere in the operator's manual for the Linkbelt 1900 crane. This has been included to illustrate that this must be a controlled, small amount of flow facilitated by some restriction.

2. The cross-over relief valves labeled as M and N are not explicitly referred to in the operator's manual. These are included in Figure 1 because they are commonly used in closed loop systems, and because Mr. Thomas Kanzler, Chief Engineer for Federated Crane, identified the valves during the inspection. These valves are shown in Figure 2 as well.
3. The operator's manual on page 7-7 discusses a "Motor Drain Circuit" used to provide cooling for the motors. This is commonly called "motor flushing" and is not unusual to see in closed loop systems; however, since this "circuit" is integral to each individual motor it is assumed to represented within components 1-4 in the schematic.
4. The case flow for the motors is obviously an important concern for this design since the return flow from the motor case remains unfiltered to avoid back pressure (operator's manual, p. 7-5). Furthermore, each motor is equipped with its own visual flow meter for inspection during the life of the machine.

Figure 2 is a photograph that roughly labels several parts on the actual winch pack. Note: this picture does not identify the pumps as they are connected to the power supply which is not shown.

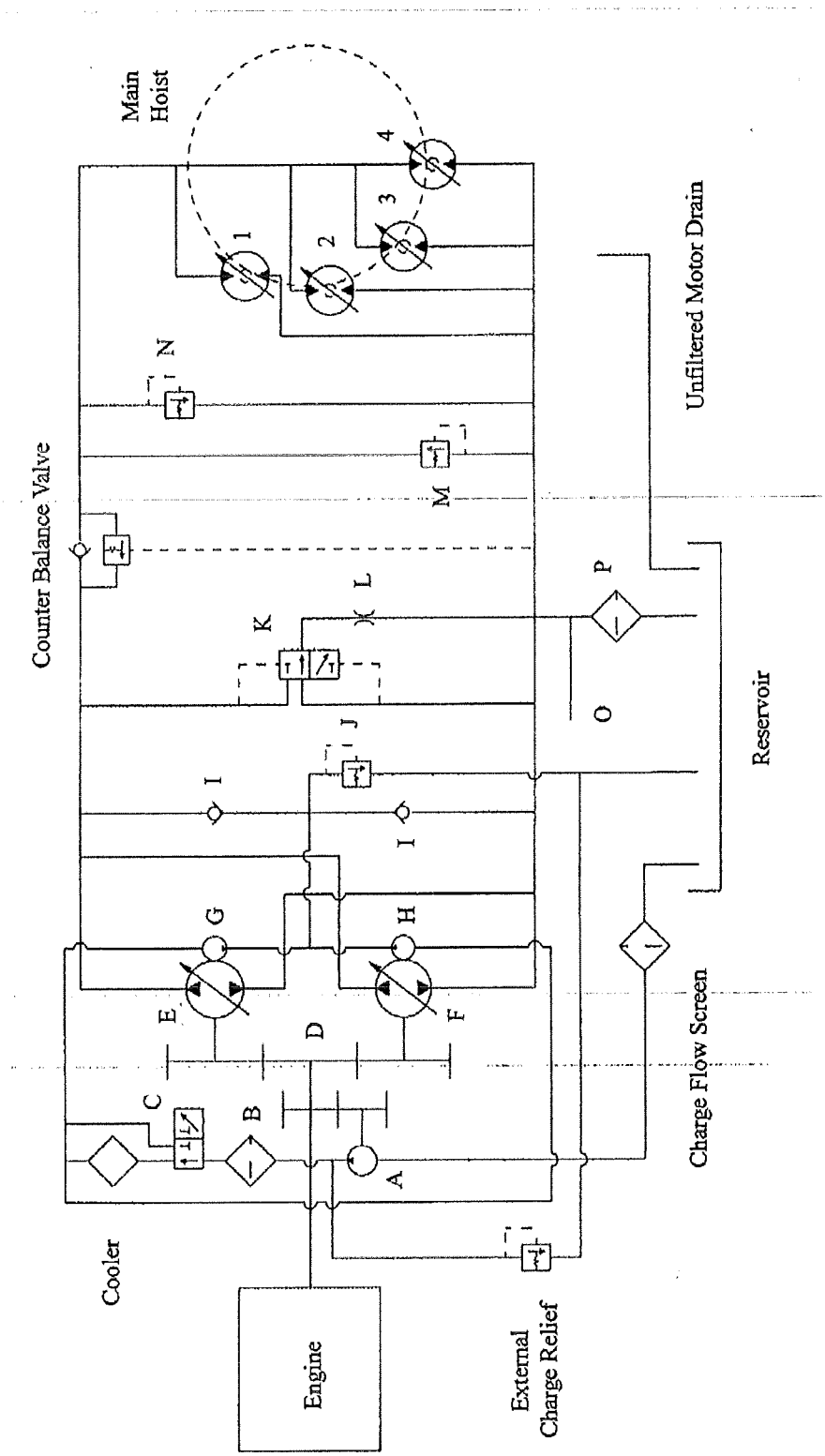


Figure 1. Schematic of the main hoist hydraulic circuit

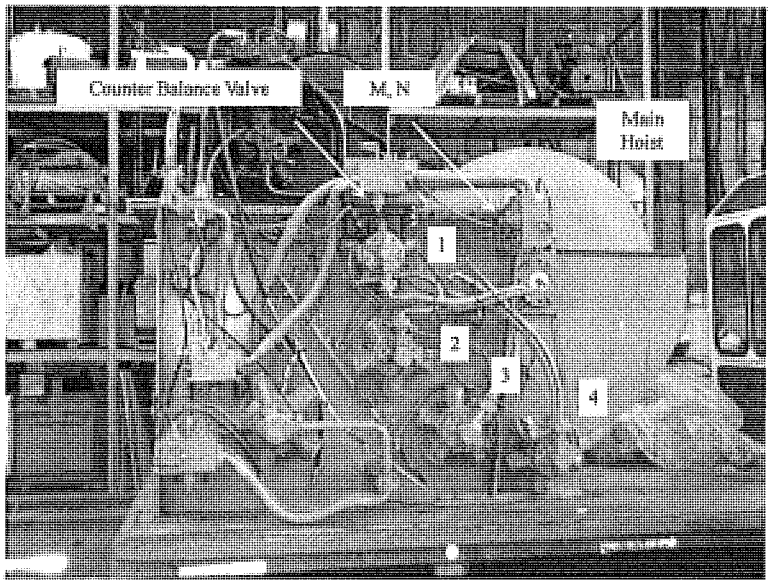


Figure 2. Photograph of the winch pack with several components in Figure 1 labeled

OBSERVATIONS

1. The hydraulic motor labeled 4 in Figure 1 and 2 was disassembled first. There was an obvious interest in disassembling this motor first because it the case had a large hole in it, from which a connecting rod had been thrown out of the machine during failure, along with another large piece of metal that appeared to belong to one of the hydrostatic bearings. The following things were observed during the disassembly process:
   a. Two jars of oil were extracted from the motor case before the motor was removed from the winch pack. These have yet to be analyzed.
   b. Seals and o-rings for the motor appeared to be in good shape, with no unusual signs of extrusion or other deformation.
   c. There were many metal parts scattered throughout the motor case ranging from long strips of material extending up to 30 cm in length to observable metal shavings less than

one millimeter in size. Many small pieces of metal were found of the approximate size of a penny. Most of these metal parts appear to have come from the mangled hydrostatic thrust bearings which had been destroyed due to an apparent over-speed phenomenon.

d. The machine was designed with 5 pistons. The piston labeled number 1 was the only piston to have lost its connecting rod. In fact, the connecting rod was found on the job site, indicating that this was the object that had most likely created the hole in the motor case. By disconnecting the connecting rod from the piston, a 5 mm lubrication passage from the pressurized side of the piston was opened up to the motor case. With a 5 mm hole like this, it is unlikely that the system could have held system pressure.

e. A few pistons could still slide in their bores a small amount. When pushed back, the bores looked clean with normal wear, indicating that a long standing problem of contamination was not responsible for the motor failure.

f. While the motor case was filled with metal shavings and broken parts of all sizes, the pressurized side of each piston had small metal shavings that were observable and had apparently found their way into the pressurized loop of the circuit.

2. The hydraulic motor labeled 3 in Figure 1 and 2 was disassembled next. The following observations were made:

   a. Two jars of oil were extracted from the motor case before the motor was removed from the winch pack. These have yet to be analyzed.

   b. This motor exhibited similar failure symptoms of Motor 4; however, the connecting rods were all nominally in place, indicating that the 5 mm lubrication passages from the pressurized side of the pistons were not opened and pressure could have been held by these pistons.

c. Metal shavings, deformed hydrostatic thrust bearings, and other pummeled parts looked similar to Motor 4.

3. The hydraulic motor labeled 2 in Figure 1 and 2 was disassembled next. The same comments in 2 above apply.
4. The hydraulic motor labeled 1 in Figure 1 and 2 was disassembled next. The same comments in 2 above apply.
5. The main hoist pump and charge pump labeled E and G respectively in Figure 1 was disassembled next. The following observations were made:
   a. Two jars of oil were extracted from the pump case before the pump was removed from the gearbox. These have yet to be analyzed.
   b. The charge pump G was in good shape and indicated no unusual wear or other failure symptoms. Joint seals indicated nothing unusual.
   c. Upon disassembly of the main hoist pump E, the valve plate and barrel face looked good with other internal parts that looked essentially new. Gaskets and joint seals indicated nothing unusual.
   d. There was no widespread contamination that was observable with the naked eye in this pump; however, the rotating group had one piston that had seized in its bore and a slipper had broken away from the ball-and-socket joint. The slipper had broken into at least three pieces, two large pieces were recovered within the pump case; however, these parts were not pummeled and do not appear to have created problems for the other pistons within the pump. This may indicate that the slipper failure was recent.
   e. When the slipper broke from the piston, a 1 mm hole was opened up from the working side of the piston to the pump case drain. A closer study needs to be made of the impact

of this created leak path.

f. Upon visual observation, the running surface of the broken slipper looked more scratched than the running surface of the other slippers; however, none of the scratches observed were unusual for machines of this type.

g. The seized piston was pounded out of the bore with a hammer and screw driver, and bore scoring was observed which was typical of a seized piston failure. All other piston bores looked very good and the pistons were free to slide within them.

h. The swash plate and other bearing components within the pump looked healthy and without damage.

i. There was no contamination from the motors that appeared to have made its way back into the main hoist pump E or the charge pump G.

6. The auxiliary hoist pump labeled F and H respectively in Figure 1 was disassembled next. The following observations were made:

   a. Two jars of oil were extracted from the pump case before the pump was removed from the gearbox. These have yet to be analyzed

   b. The charge pump H was in good shape and indicated no unusual wear or other failure symptoms. Joint seals indicated nothing unusual.

   c. The auxiliary hoist pump F was in good shape and indicated no unusual wear or other failure symptoms. All internal parts looked essentially new.

   d. There was no contamination from the motors that appeared to have made its way back into the auxiliary hoist pump F or the charge pump H.

7. The external charge pump labeled A in Figure 1 was disassembled next. This pump was disassembled and indicated no failure symptoms. All parts looked in good operating

condition.

8. A 5 gallon oil sample from the system reservoir was taken. This sample has yet to be analyzed but appeared from visual observations to contain a significant amount of water. Oil samples throughout the system were murky with a greenish tinge. Some jars of oil appeared to have a different shade of green than others.

PRELIMINARY FAILURE THEORIES

The following failure theories are listed in my current order of preference:

1. Failure Theory 1. Failure of Charge Pressure Relief Valve J
   a. While the operator is raising the payload, the charge pressure begins to drop due to a possible failure of the relief valve J.
   b. As the charge pressure drops, the ability for the pumps to remain in stroke also drops due to the reduced control pressure, and the pumps begin to de-stroke.
   c. The pumps become unable to makeup leakage in the system and the pressure in the loop drops resulting in an inability to hold the load.
   d. The payload begins to drop, the motors reverse direction, and flow is forced backward through various leak paths in the high pressure side of the circuit.
   e. If the counter balance valve is working, and if the system is sufficiently "tight" between the counter balance valve and the motors, the load should hold.
   f. If the counter balance valve is not working then flow from the motors can squeeze through the leak paths on both sides of the counter balance valve, and without sufficient flow capacity the main and auxiliary hoist pumps will be unable to make up for this leakage. Note: the broken slipper in the pump will exacerbate this problem.

g. The operator releases the lever from the full hoist position; but the pumps are already essentially at neutral so this has little effect.

h. The motors begin to over speed, breaking off the connecting rod in Motor 4 and opening up a short circuit on the motor side thus exacerbating the failure.

i. To verify or refute this failure theory the following things must be done: 1) a bench test of the relief valve J should be conducted to see if the charge pressure is set at an appropriate level and if this degrades over time, and 2) modeling of this failure scenario should be done to understand the makeup flow that is required and available from the pump under a reduced control situation.

j. Note: the reduced charge pressure situation is suspected on a previous machine failure and a reduction in charge pressure levels have apparently been observed over time on that machine. For this reason I favor this scenario right now.

k. Note: if the system is running hot, possibly due to the cooler bypass valve being left closed, leakage throughout the system will increase and charge pressures will naturally drop over time. The position of the cooler bypass valve should be checked.

2. Failure Theory 2. Failure of the Pump E Slipper, and the Counter Balance Valve

a. While the operator is raising the payload, the slipper in the main hoist pump (labeled E in Figure 1) breaks off, creating a 1 mm leak path from the circuit to the pump case drain.

b. This additional leakage keeps the pumps from generating sufficient pressure to hold the payload.

c. Assuming that the counter balance valve is stuck open, the payload begins to drop, the motors reverse direction, and flow is forced backward through the counter balance valve and through the additional leak path in the pump.

d. All the pump flow plus the additional motor flow is now being squeezed through the 1 mm leak path (not a likely situation … but I need to calculate this).

e. The operator releases the lever from the full hoist position and the pumps go to neutral. The main hoist pump E continues to receive flow from the motors through the failed-open counter balance valve, and through the 1 mm leak path into the pump case due to the slipper failure.

f. The motors begin to over speed, breaking off the connecting rod in Motor 4 and opening up a short circuit on the motor side thus exacerbating the failure.

g. Essentially no flow from the failed motor system makes it to the main pump system since the path of least resistance is through the motor case 5 mm hole and all charge flow is flushing fluid down both sides of the loop away from the pumps.

h. This theory is weak in that it requires two simultaneous failures: 1) a slipper failure, and 2) a counter balance valve failure.

i. Two things should be checked to verify or refute this failure theory: 1) an estimate of how much pressure the system can hold with a 1 mm leak path added, and 2) a bench test of the counter balance valve to see if it is stuck open.

3. Failure Theory 3. The Motor 4 Connecting Rod Breaks

a. While the operator is raising the load, the motor connecting rod breaks away from Piston 1 in Motor 4, opening up a 5 mm leak path from the pressurized side of the piston.

b. The 5 mm leak path allows high pressure flow to drain into the motor case thus short circuiting the loop. Being unable to hold the payload, the motors reverse direction and the main hoist begins to unwind as the payload drops.

c. The operator releases the lever from the full hoist position and the pumps go to neutral

receiving and delivering no flow from the hydraulic circuit. This explains why the pumps remained uncontaminated by the motor failures.

d. The charge system continues to provide flow to the loop; but without signs of cavitiation or pulling a vacuum. This means that if the motors were still displacing volume as the payload dropped, they were augmenting charge flow by freely circulating fluid (or air) through the motor case / reservoir system.

e. All motors undergo an over speed failure, resulting in broken parts throughout the motor system.

f. This theory leaves the broken slipper in the main hoist pump unexplained.

4. Failure Theory 4. The Motor Flushing System Breaks

a. This theory is similar to Failure Theory 1, except the leak path from the high pressure side of the circuit is somehow created through the motor flushing system described on page 7-7 in the operator's manual. No evidence of this failure mode was discovered during the machine inspection; however, we didn't look for it either.

b. To explore this possibility, we need to look at a schematic of the hardware that is used to create the motor flushing circuit and the hardware needs to be reexamined for a possible failure mode of this type.

c. All other aspects of the failure theory are similar to Failure Theory 1, and the broken slipper in the main hoist pump still remains unexplained.

5. Failure Theory 5. The Cross Over Relief Valve N Fails

a. While the operator is raising the payload, the cross over relief valve (labeled N in Figure 1) cracks open and sticks open.

b. This creates a short circuit in the hydraulic loop and equalizes the pressures on both sides

of the circuit disabling the ability of the motors to generate torque and to hold the payload. The motors reverse direction and the payload begins to drop.

c. The operator releases the lever from the full hoist position and the pumps go to neutral receiving and delivering no flow from the hydraulic circuit. Again, this explains why the pumps remained uncontaminated by the motor failures.

d. As the motors spin they essentially make up their own flow through the cross over relief valve. The pressures in the system drop because the main pumps are at neutral and the charge system makes up for small flow deficits as usual.

e. Since the charge system is operating normally, it experiences no damage.

f. All motors undergo an over speed failure, resulting in broken parts throughout the motor system.

g. This theory leaves the broken slipper in the main hoist pump unexplained.

6. Failure Theory 6. Check Valves on the Main Hoist Junction Block Fail

   a. There is a check valve system on the main hoist junction block that could short circuit the motor side of the loop if the valves were opened.

   b. To verify this possible failure mode, the check valves should be removed and bench tested for functionality.

PRELIMINARY CONCULSIONS

The following conclusions are supported by the investigation conducted on this failure incident thus far:

1. The following valves should be bench tested to verify their functionality. These tests are listed in order of preference and priority:

a. The position of the cooler bypass valve (shown in Figure 1 but not labeled) should be checked to see if it is closed. This may result in a hot running machine with excessive leakage throughout, thus reducing charge pressure and creating pump control problems.

b. The internal charge relief valve(s) (shown in Figure 1 as J) should be bench tested over time to see if it holds the set charge relief pressure. This should be tested with oil temperatures that range from 70 to 200 degrees Fahrenheit.

c. The external charge relief (shown in Figure 1) should be bench tested over time to see if it holds the set charge relief pressure. This should be tested with oil temperatures that range from 70 to 200 degrees Fahrenheit.

d. The counter balance valve (shown in Figure 1) should be bench tested to see if it stops flow in one direction while the pilot line is open to atmospheric pressure.

e. The cross over relief valves (shown in Figure 1 as M and N) should be bench tested to see if they stop flow below their set pressure of around 3,600 psi.

f. The motor flushing valves should be studied and tested to see if they are function properly.

g. The check valves on the main hoist junction block should be tested to see if they are functioning properly.

2. The following analysis should be conducted to better understand the likelihood of each previously listed failure mode:

   a. A simple model of the system should be generated to test the likelihood of various failure theories, based upon discoveries of the pump and motor disassembly process and the valve bench tests that are being suggested.

   b. Flow analysis for the entire system under pressure should be conducted to see how

sensitive the system is to increased flow demand resulting from, say, a failed slipper in the main hoist pump.

## APPENDIX

A previous failure on a similar crane had occurred prior to this incident. Since all interested parties were present, a disassembly of certain components for this system was also conducted. The following disassembly occurred:

1. Disassembly of the main hoist pump and its charge pump was conducted. This disassembly indicated that he main hoist pump was in good condition with all parts looking essentially new. No contamination was observable with the naked eye.
2. Disassembly of the external charge pump was conducted. Again, this disassembly indicated that the pump was in good condition with no apparent failure symptoms.

# REFERENCE 7. OPERATOR MANUAL

(2) There are six control functions that the system can deactivate. They are:
(a) Boom Up
(b) Boom Down
(c) Boom Deceleration
(d) Hoist Up
(e) High Speed Hoist
(f) Intermediate Speed Hoist

Chart B lists each function and under what conditions that function would be deactivated. The operator should become familiar with the causes for the deactivation of any control function.

**WARNING**

To Avoid Personal Injury Or Machine Damage, Never Use The Boom Override Switch When There Is A Load On The Main Or Auxiliary Hoist Line. Use The Override Switch Only For Raising The Boom Past The Hoist Limit To Release The Ratchet Pawl, Or For Lowering Past The Lower Limit For Boom Removal.

Chart B - Control Limits

| | |
|---|---|
| Boom Up Deactivates: | (1) If the automatic minimum radius for a particular boom length is exceeded.<br>(2) If the manual minimum radius set by the operator is exceeded. |
| Boom Down Deactivates: | (1) If the automatic maximum radius for a particular boom length is exceeded.<br>(2) If the manual maximum radius set by the operator is exceeded.<br>(3) If the hook load exceeds the alert load by 10% or more.<br>(4) If the W/T switch is pushed. |
| Boom Deceleration: (Boom Hoist Slow - Down): | (1) If the boom angle exceeds 75° (radius at 75° depends on boom length). |
| Hoist Up Deactivates: | (1) If the hook load exceeds the alert load by 10% or more.<br>(2) If the W/T switch is pushed. |
| High Hoist Speed Deactivates: | (1) If the single line pull exceeds -<br>(a) 14,000 lbs. (6340 kg) for TG1900-2300-2300B.<br>(b) 8,800 lb (3112 kg) for TG1500. |
| Intermediate Hoist Speed Deactivates: | (1) If the single line pull exceeds -<br>(a) 36,000 lb. (16330 kg) for TG1900;2300;2300B.<br>(b) 14,700 lb. (6668 kg) for TG1500. |

Subject | Page No.

Removal Of Gear/Shaft Assemblies And Bearings From The Pump Drive Gearbox....13-3
Pump Drive Gearbox Assembly Procedure....13-4

Figures | Page No.

Fig.13-1 Pump Drive Gearbox....13-2
Fig.13-2 Flywheel And Housing Alignment, Step 1....13-4
Fig.13-3 Flywheel And Housing Alignment, Step 2....13-4
Fig.13-4 Flywheel And Housing Alignment, Step 3....13-4
Fig.13-5 Flywheel And Housing Alignment, Step 4....13-4
Fig.13-6 Gearbox Mounting....13-5

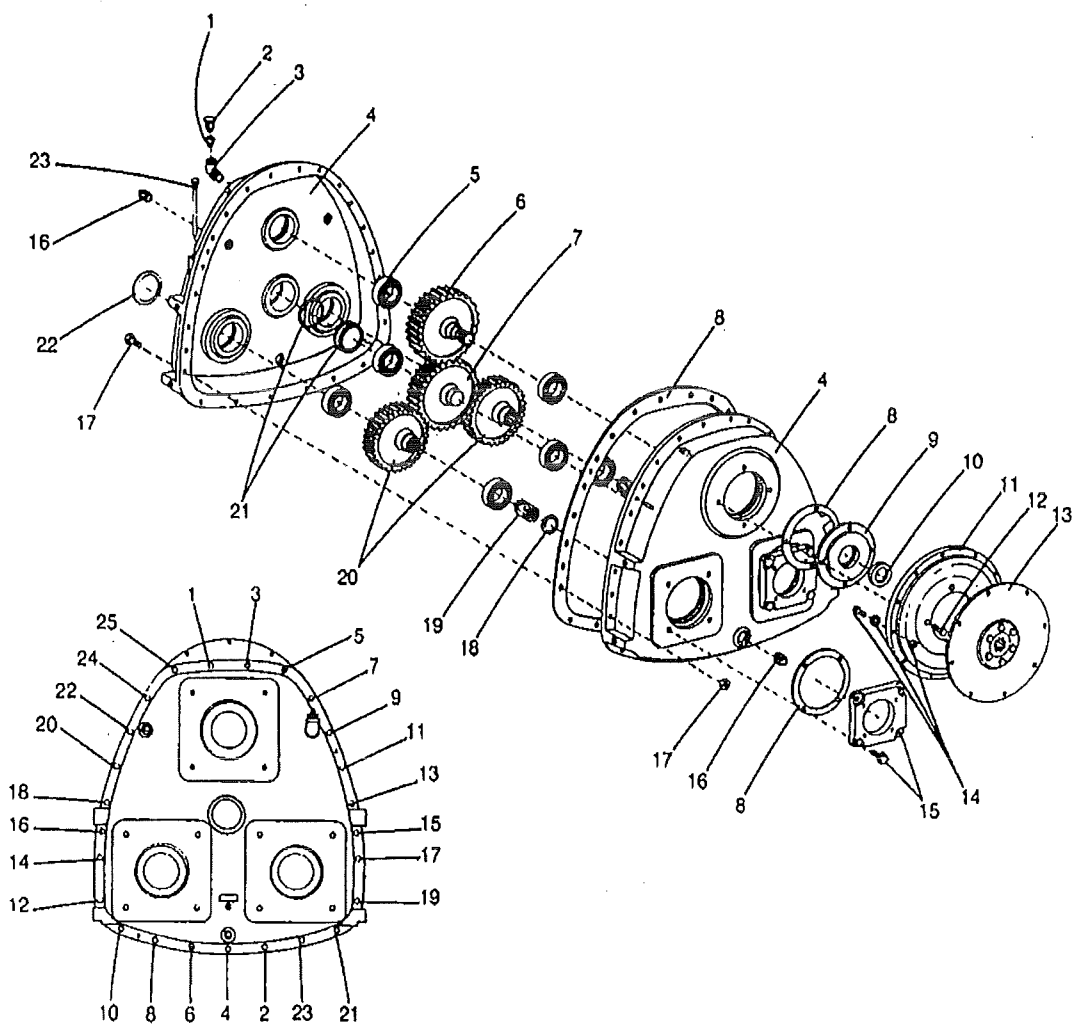


**Bolt Tightening Sequence**
**Bolt Torque - 99-109 in./lbs. (11-12 N·M.)**

Fig. 13-1
Pump Drive Gearbox

(1) Bushing
(2) Vent Fitting
(3) Elbow
(4) Housing Half
(5) Bearing
(6) Input Gear Ass'y.
(7) Idler Gear
(8) Gasket
(9) Seal Carrier
(10) Oil Seal
(11) Engine Adaptor
(12) Capscrew
(13) Drive Plate Ass'y.
(14) Capscrew, Lockwasher, Nut
(15) Pump Adaptor W/Capscrews
(16) Plug
(17) Housing Bolt And Nut
(18) Snap Ring
(19) Spline Adaptor
(20) Output Gear
(21) Bearing Retainer, O-Ring, Snap Ring
(22) Snap Ring
(23) Dip Stick

Removal Of Gear/Shaft Assemblies And Bearings From The Pump Drive Gearbox

Removal:

(1) Remove the pump drive gearbox from the engine.
(2) Remove the nuts and bolts from the pump drive housing half. See Fig. 13-1.
(3) Separate the housing halves. Slide one housing half off the dowels, then slide it free from the bearings.

Note: Each gear/shaft assembly will remain with its bearings as a sub-assembly. If the sub-assemblies are not to be removed, they may remain in either housing half. For ease of reassembly, it is recommended that all the sub-assemblies remain in one or the other housing half.

(4) If the bearings are to be removed from the gear/shaft assemblies, use a puller. Do not attempt to separate the gear and shaft. They are manufactured as a single unit at the factory. See the parts book for correct part numbers.

Reasembly:

(1) Reassemble the pump drive gearbox in reverse order. Replace any O-rings or gaskets as needed.
(2) Reassemble the bearings to the gear/shaft assemblies.
(3) Place all the gear/shaft assemblies and bearings in either housing half. Make sure that the bearings are completely seated in the bores. Place the dowels in this housing half.
(4) Guide the other housing half over the exposed bearings and over the dowels.
(5) Make sure the bearings are completely seated in the bores.
(6) To ensure that the housing seals evenly, tighten the bolts down on the housing halves in the sequence shown in Fig. 13-1. Torque to 99-109 in/lbs. (11-12 N·m).
(7) Turn the input shaft by hand to ensure that the unit is free running. Binding will load the bearings end-wise and cause excessive heat when running.
(8) Mount and align the pump drive gearbox to the engine per the following Pump Drive Gearbox Assembly Procedure.

**CAUTION**

To Avoid Component Damage, The Pump Drive Gearbox Must Be Mounted And Aligned Per The Pump Drive Gearbox Assembly Procedure.

Pump Drive Gearbox Assembly Procedure

(1) Secure the engine to the frame.
(2) After the engine is mounted in place, use a dial indicator to check the flywheel and housing alignment and record the dimensions for service reference.

(a) Clean the flywheel and flywheel housing thoroughly.
(b) Measure the diameter of the driving ring pilot bore on the flywheel and the diameter of the gearbox drive disc. See Fig. 13-2. The dimensions taken should be within the values listed below.

Pilot Bore Diameter:
18.375 to 18.379 inches (46.67 to 46.68cm)

Drive Disc Diameter:
18.370 to 18.374 inches (46.66 to 46.67cm)

(c) Attach the dial indicator to the flywheel so that the indicator stem rides on the housing face (see Fig. 13-2). The indicator reading should not exceed 0.008 inches (0.2032mm) through one revolution of the flywheel.

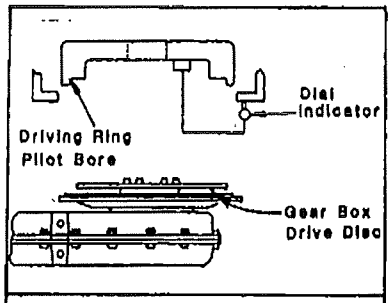

Fig. 13-2

(d) Readjust the dial indicator so that the stem rides on the bore of the flywheel housing (see Fig. 13-3). The indicator reading should not exceed 0.008 inches (0.2032mm) through one revolution of the flywheel.

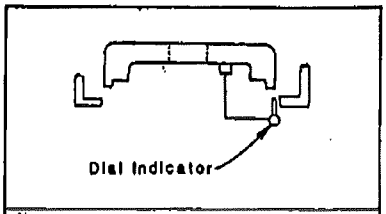

Fig. 13-3

(e) Remove the indicator base from the flywheel and attach it to the flywheel housing. Adjust the stem so that it rides on the flywheel (see Fig. 13-4). The indicator reading should not exceed 0.01 inches (0.254mm) through one revolution of the flywheel.

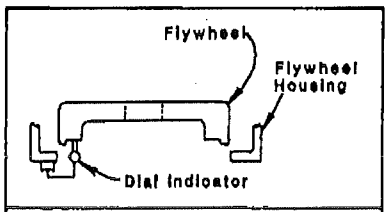

Fig. 13-4

(f) Readjust the indicator so that the stem will ride on the driving ring pilot bore (see Fig. 13-5). The eccentricity should not exceed 0.005 inches (0.127mm) maximum total indicator reading through one revolution on the flywheel.

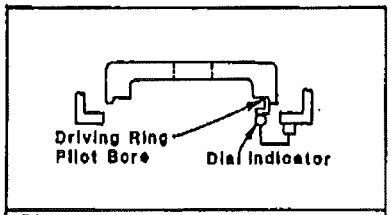

Fig. 13-5

Note: The above specifications are SAE standards for flywheels with 16 to 21 inch (41 to 53cm) housing bore diameters. If any indicator reading obtained in the procedures described above exceeds the specified limits, do not install the pump drive gearbox. Contact the engine manufacturer's representative for corrective action.

(3) Remove the gearbox drive disc from the gearbox input shaft and attach the disc (item #5 in Fig. 13-6) to the engine flywheel. Tighten the locking capscrews (item #4 in Fig. 13-6) to 100 ft/lbs. (133.6 N·m).
(4) Coat the adjusting pin, tapered bushing, bushing seat and the bore of the adjusting block assembly with 830009 grease. Install these items, and the lockwasher and locknut, tightening capscrews and locknuts snug.
(5) Rotate the adjusting pins so that the adjusting block assemblies are at their lowest position.
(6) Using a lifting hoist, install the gearbox assembly, meshing the shaft spline with the disc drive hub. Align the housing register with the flywheel housing.
(7) Insert two pieces of 0.010 inch (0.254mm) thick shimstock, one on each side, between the gearbox and the flywheel housing at the point marked "A" in Fig. 13-6. Tighten the mounting bolts at point "B" to 70 ft/lbs. (93.5 N·m).

Note: The remaining mounting bolts attaching the gearbox to the flywheel housing may have to be started so that the shims are clamped between the gearbox and flywheel housing.

(8) Tighten the locknuts until the adjusting pins can be rotated with 200-20 ft/lbs. (267-27 N·m) torque.
(9) Rotate the adjusting pins clockwise until the adjusting blocks support the weight of the gearbox. If the adjusting

blocks do not touch the gearbox, add shims (item #14 in Fig. 13-6) as required until the blocks support the gearbox weight when the adjusting pins are rotated. The gearbox and the engine frame at point "C" should be equal within 1/16 inch (1.57mm). Readjust the height of the adjusting blocks as required and insert shims (item #7 in Fig. 13-6) at points "C" until the gap is filled. Insert the capscrews and tighten until snug.

(10) Measure the gap between the flywheel housing and gearbox at points "D", with shims installed at point "A". Raise or lower the adjusting blocks by rotating the adjusting pin until the gap at the top and bottom are equal within 0.0005 inch (0.01mm).

(11) Tighten the locknuts to 150 ft/lbs. (200 N·m) and tighten the capscrews in the adjusting blocks to 100 ft/lbs. (133.5 N·m).

(12) Remeasure the gaps at points "D". If equal within 0.0005 inch (0.01mm), proceed to step 13. If the gaps at "D" are not within tolerance, loosen the capscrews in the adjusting block and locknut, holding the adjusting pins to prevent slippage. Tap on the end of the adjusting pin to loosen and rotate pin to readjust gaps at "D". Continue this procedure until the gaps are within tolerance.

(13) After securing the locknuts and capscrews in the adjusting block, remove the shims at "A" and tighten the remaining mounting bolts to 70 ft/lbs. (93.5 N·m). Tighten the capscrews at points "C" to 350 ft/lbs. (467.6 N·m). Bend the tab on the lockwasher and bend the shims at point "C" at both ends.

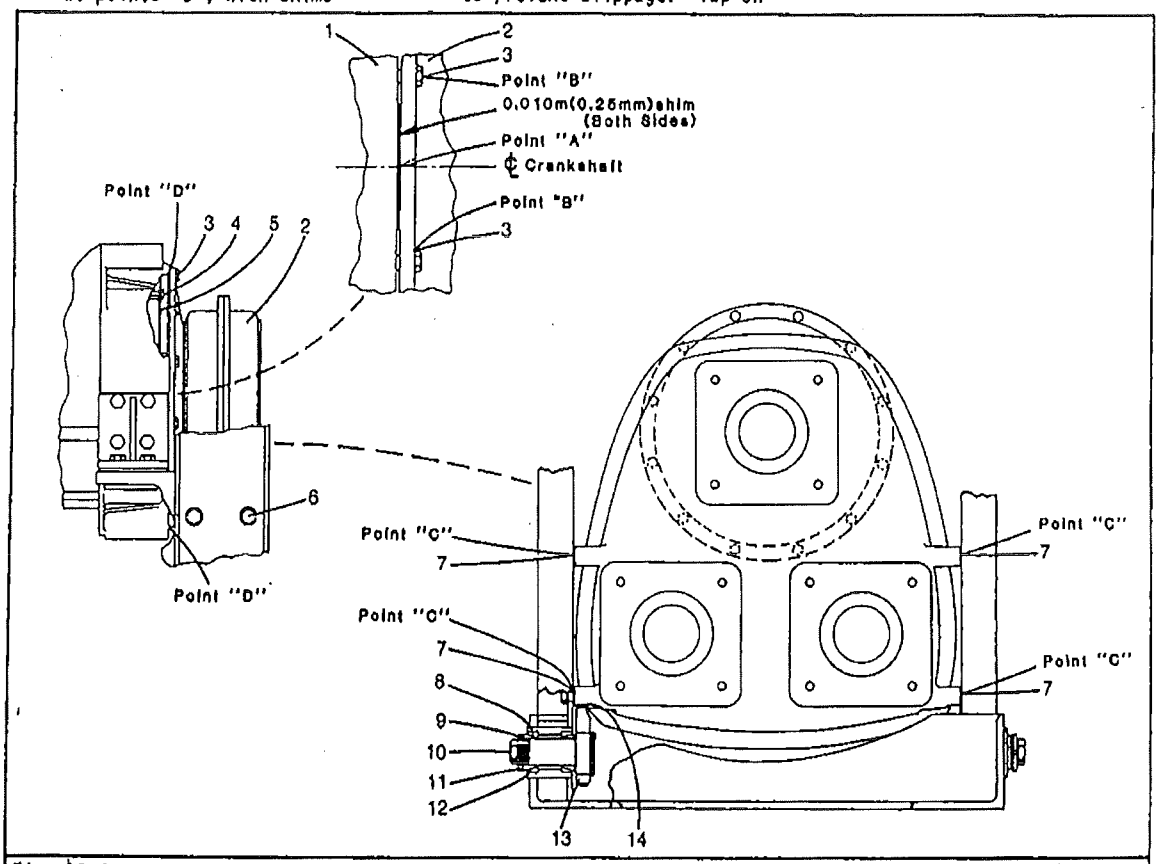


Fig. 13-6 FT233-C
Gearbox Mounting

(1) Engine Flywheel Housing
(2) Gearbox
(3) Mounting Bolts (12)
(4) Locking Capscrew (8)
(5) Drive Disc
(6) Capscrew (8)
(7) Shim, 14 Gauge (1.90mm)
(8) Bushing Seat
(9) Lockwasher
(10) Adjusting Pin
(11) Locknut
(12) Tapered Bushing
(13) Adjusting Block Assembly
(14) Shim, 1/8" (3.175mm)

Subject — Page No.

General Lubrication Information....5-3
Upper Maintenance Schedule - 10 Hours....5-3
Upper Maintenance Schedule - 50 Hours....5-4
Upper Maintenance Schedule - 250 Hours....5-4
Upper Maintenance Schedule - 500 Hours....5-5
Upper Maintenance Schedule - 1000 Hours Or Seasonal....5-6
Lubricating Open Gears....5-9
Lubrication Specifications....5-17
Hydraulic System Check And Fill Procedure....5-19
Filter Change Procedure....5-19
Hydraulic Oil Change Procedure....5-22
Hydraulic Priming Procedure....5-25
Hydraulic Pressure Setting....5-27
Pressure Testing Stations....5-31
Replacing Or Rebuilding Air Dryer Dessicant (Drying Agent) Cartridge....5-36
Charge Pressure Switch Circuit....5-39
Checking Charge Pressure Switches To Determine Charge Pressure Loss....5-39
Alternate Suggestions....5-41
Charge Pump Removal....5-42
Displacement Control Valve Removal....5-43
Hydraulic Oil Sampling Procedure....5-44
Oil Change After Component Failure....5-46

5

Figures — Page No.

Fig. 5-1 Machine Upper Lubrication....5-7
Fig. 5-2 Open Gear Lubrication....5-10
Fig. 5-3 Attachment Lubrication - TG1500-1900....5-11
Fig. 5-4 Attacement Lubrication - TG2300-2300B....5-13
Fig. 5-5 Climbing/Bogie Lubrication Points....5-15
Fig. 5-6 Traveling Gantry Lubrication Points....5-16
Fig. 5-7 Hydraulic Reservoir Oil Level Label....5-19
Fig. 5-8 Pump Drive Gearbox....5-19
Fig. 5-9 Return Filter....5-20
Fig. 5-10 Hydraulic Reservoir....5-20
Fig. 5-11 Charge Filter....5-20
Fig. 5-12 Main Hoist And Boom Hoist Circuits....5-21
Fig. 5-13 Auxiliary Hoist Circuit....5-22
Fig. 5-14 Winch Unit Drain Lines....5-23
Fig. 5-15 Power Pack Hydraulics....5-24
Fig. 5-16 Main And Boom Hoist Circuits....5-26
Fig. 5-17 Swing Gauge Ports, Radial Piston Motors....5-26
Fig. 5-18 Crossover Relief Valve....5-28
Fig. 5-19 Swing Gauge Ports, TG2300B....5-29
Fig. 5-20 Swing Gauge Ports, SVT Swing....5-30
Fig. 5-21 Test Gauge And Fittings....5-31
Fig. 5-22 Charge Pressure Manifold Port....5-32
Fig. 5-23 Charge Filter Inlet Pressure....5-32
Fig. 5-24 Charge Pressure Ports....5-32
Fig. 5-25 System Pressure Ports - Main Hoist And Boom Hoist....5-33
Fig. 5-26 System Pressure Ports - Swing (TG1500-1900-2300)....5-34
Fig. 5-27 System Pressure Ports - Swing (TG2300B)....5-34
Fig. 5-28 System Pressure Ports - Auxiliary Hoist....5-35
Fig. 5-29 Air Dryer Dessicant Replace Or Refill....5-36
Fig. 5-30 Charge Pressure Switches....5-40
Fig. 5-31 Hydraulic Piston Pump....5-42
Fig. 5-32 Petcock Location....5-44
Fig. 5-33 Oil Sample Card....5-44
Fig. 5-34 Hydraulic Oil Sample Bottle....5-44
Fig. 5-35 Maximum Allowable Contamination Level....5-45

Charts — Page No.

Chart A - Relief Valve Settings....5-27
Chart B - Charge Pressures....5-39

Notes

General Lubrication Information

The machine should be regularly and systematically lubricated in accordance with the lubrication charts shown in this section of the manual. The time interval shown on each lubrication chart is intended as a guide only. Under unusual working conditions, more frequent lubrication will be necessary. In these cases, the person responsible must use his own judgement and work out his own lubrication schedule.

The following points are important and must be followed when lubricating a machine:

(1) Wiping the grease gun nozzle and fitting before lubrication will help keep grit from enterint the bushing or bearing.
(2) Keep all grease and oil cans and containers clean. Always replace the lid on containers when through to prevent entry of foreigh materials. Wipe off can covers before using.
(3) Drain oil cases when hot to drain off accumulated sludge.
(4) Watch for signs of incorrect lubrication, such as failure of fitting to take grease. If a fitting will not take grease, determine the cause before further operation of the machine.

Note: The air compressor and governor are not supplied. Contact the engine manufacturer's closest distributor for repair or replacement.

(5) Use a clean funnel equipped with a strainer for pouring lubricants. Clean an area around fill or check plugs before removing to prevent entry of foreign material.

Note: See specific instructions later in this section for lubrication check and change procedures on all gear cases.

**WARNING**

Shut Off The Engine Before Working On The Machine. Replace All Guards Before Starting Machine.

5

Upper Maintenance Schedule

Every 10 Hours

| Operation | Remarks |
|---|---|
| Engine | (1) Provide lubrication and maintenance as recommended by the manufacturer. |
| Main, Boom, and Auxiliary Hoist Gear Train | (1) Maintain a thin film of grease on the gear train at all times. The engine must be shut down when applying the grease. See Fig. 5-1. |
| Turntable Bearing Gear and Swing Pinion | (1) Maintain a thin film of grease on the turntable gear at all times. The upper engine must be shut down when applying the grease, and the swing brake applied. |
| Wire Rope | (1) Inspect all wire rope and fittings daily, as explained in Section 8 of this manual. |
| Air Reservoirs | (1) Drain accumulated water. |
| Pneumatic Lubricator | (1) Check oil flow and adjust if necessary.<br>(2) Check oil level and fill if necessary. |
| Pneumatic Filter | (1) Drain accululated water. |
| Fuel Tank, Radiator, And Battery | (1) Check and fill as necessary.<br>(2) Check anti-freeze in winter. |
| Hydraulic Reservoir | (1) Check oil level - add as necessary.<br>(2) Inspect the system for leaks, wear, or other damage, Repair before further operation.<br>(3) Before starting the engine, drain any water by using the drain plug at the bottom of the hydraulic reservoir. Water accumulation is due to condensation in the hydraulic system. |
| Hydraulic Filters | (1) Check filter indicators for evidence of plugged or dirty filters. |
| Boom and Jib Chords & Lattice | (1) Inspect all parts of the attachment, paying particular attention to the chords and lattice. If damaged, the boom may collapse. If a lattice or diagonal bracing member is broken, replace it. If bent, straighten it. Refer to general bulletin #135B for repair information. If a main chord is damaged or bent, even a slight amount, don't use it. Don't try to repair it. These members are so vital that it is not practical to attempt repair. Replace the entire boom section. |

Every 50 Hours

| Operation | Remarks |
|---|---|
| First perform all operations listed under 10 hours. | |
| Engine | (1) Provide lubrication and maintenance as recommended by the manufacturer. |
| Air Box Drains (GMC Engines Only) | (1) Drain as explained by the manufacturer. |
| Main, Auxiliary, and Boom Hoist Shafts, and Countershafts | (1) Lubricate sufficiently to fill the bearing. |
| Swing Planetary Lower Bearing | (1) Lubricate sufficiently to fill the bearing. |
| Turntable Bearing | (1) Lubricate sufficiently to fill the bearing. |
| Pump Drive Gearbox (See Fig. 5-11) and Swing Planetary | (1) Check oil level, and fill as required.<br>(2) Inspect for damage or leakage. Repair before further operation if damaged or leaking. |
| Brake Band Linkage | (1) Lubricate sparingly with engine oil.<br>(2) Wipe up excess oil to prevent it getting on the brake linings. |
| Boom Hoist Pawl Shaft and Linkage, Swing Brake Linkage, and Control Lever Linkage. | (1) Lubricate all pivot points with engine oil. |
| Brakes | (1) Check all brakes for proper adjustment. Adjust as explained in Section 6.<br>(2) Greasy, aged, or worn linings must be replaced. Continued operation may be unsafe.<br>(3) Check linings for foreign particles which may score drums. |
| Hydraulic Filters | (1) Change after first 50 hours of operation on a new machine, and every 500 hours thereafter (or as indicator directs). |
| Pump Control Linkage | (1) Lubricate all pivot points with engine oil. |
| General Upper and Attachment | (1) Lubricate all remaining 50 hour points as listed on the lubrication chart. |
| Sludge Tank | (1) Check fluid level in sludge tank; drain if required. |

Every 250 Hours

| Operation | Remarks |
|---|---|
| First perform all operations listed under 50 hours. | |
| Engine | (1) Provide lubrication and maintenance as recommended by the manufacturer.<br>(2) Check engine high and low idle adjustments. |
| Engine and Winch Unit Mounting Bolts | (1) Check bolts for proper torque. See Sections 3 or 9. |
| Pneumatic Filter | (1) Clean the filter as explained in Section 6. |

Every 250 Hours - Continued

| | |
|---|---|
| Turntable Bearing Mounting Bolts | (1) Check bolts for proper torque. For bolt torque, refer to specific bolt torque chart in Section 9. |
| Tower Bolts (TG-1500-1900-2300B Only) | (1) The tower bolts must be initially tightened as described in Section 2 of this manual. After the first 250 hours of operation, tower bolt elongation must be remeasured and, if necessary, the bolts retightened to their proper value. Every 1000 hours thereafter tower bolt elongation must be remeasured and, if necessary, the bolts retightened. Tower bolt elongation must be remeasured and, if necessary, the bolts retightened if at anytime the tower has been subjected to accidental overloading, high storm winds, earthquake, etc. See Section 2 of this manual for tower bolt retightening procedure. |
| Anchor Bolts (TG-1500-1900-2300B Only) | (1) The anchor bolts must be initially tightened as described in Section 2 of this manual. The anchor bolts must be retightened after the first 250 hours of operation and every 1000 hours thereafter. If at anytime the tower has been subjected to accidental overloading, high storm winds, earthquake, etc., the anchor bolts must be retightened. See Section 2 of this manual for anchor bolt retightening procedure. |
| Brakes | (1) Visually check band connecting lugs, actuating linkage, and the mounting bracket for signs of wear or cracking.<br>(2) Visually check band for any indications of bending, interference, or unusual lining wear which would indicate excessive wear of the brake parts.<br>(3) Check condition of the band adjusting clevis, nut, and retaining angle and bolt. Make sure the locknut will hold against rotation during operation. |
| Mast Peak Sheaves | (1) Equipped with lifetime bearings. |
| Boom Peak Sheaves, Boom Foot Pin, Hanger Block Sheaves and Bushings, Crossover Sheave | (1) Provide lubrication to all bearings. |
| Tip Extension Head Sheave, and Deflector Roller (Optional) | (1) Provide lubrication to all bearings. |
| Boom Accessway Line | (1) Check installation and adjust line tension if required. |

Every 500 Hours

| Operation | Remarks |
|---|---|
| Brakes | (1) Remove the band and all related parts for a detailed visual inspection. If any of the parts show signs of undue wear, cracks, or other distress, replace them. Reassemble and adjust the mechanism as shown in Section 6. |
| Pneumatic Lubricator | (1) Fill and adjust as described in Section 6 |
| Hydraulic Filters | (1) Change the filters as described in Section 5. |

**WARNING**

Never Remove All Bnake Bands From Any Individual Function With The Engine Stopped, Or While A Load Is Supported By The Main Or Auxiliary Hoist. If These Two Conditions Are Not Strictly Adhered To, The Load May Fall. Prior To Removing The Boom Hoist Brake Band, Visually Check The Boom Hoist Pawl To Ensure That It Is Fully Engaged In The Ratchet Teeth. See Instructions In Section 6 For Brake Band Removal Procedure.

Every 1000 Hours Or Seasonal

| Operation | Remarks | 1000 Hours | Seasonal |
|---|---|---|---|
| First perform all operations listed under 250 and 500 hours. | | | |
| Engine | (1) Provide lubrication and maintenance as recommended by the manufacturer. | X | X |
| Pump Drive Gearbox and Swing Planetary | (1) Drain and refill with specified lubricant. | X | X |
| Hydraulic System | (1) Drain, clean, and refill with proper weigh hydraulic oil. | | X |
| | (2) Remove suction strainer and clean. If damaged, replace. | | X |
| | (3) Remove diffuser from bottom of return filter. Clean, or if necessary, replace. See Fig. 5-13. | | X |
| Turntable Gear & Pinion, Gear Train | (1) Inspect all open gears for wear or damage. Replace if necessary. | X | |
| Pneumatic Lubricator | (1) Drain, clean and refill with proper weight oil. See Fig. 6-1. | | X |
| Pneumatic Air Dryer | (1) Check pneumatic system for excessive accumulation of water. If necessary, drying agent must be changed. | | X |
| Wire Rope Sheaves | (1) Inspect for signs of wear or damage. | X | |
| Bridle Sheaves | (1) Equipped with lifetime bearings. | | |
| Tower Bolts (TG1500-1900-2300B Only) | (1) The tower bolts must be initially tightened as described in Section 2 of this manual. After the first 250 hours of operation, tower bolt elongation must be remeasured and, if necessary, the bolts retightened to their proper value. Every 1000 hours thereafter tower bolt elongation must be remeasured and, if necessary, the bolts retightened. Tower bolt elongation must be remeasured and, if necessary, the bolts retightened if at anytime the tower has been subjected to accidental overloading, high storm winds, earthquake, etc. See Section 2 of this manual for tower bolt retightening procedure. | X | |
| Anchor Bolts (TG1500-1900-2300B Only) | (1) The anchor bolts must be initially tightened as described in Section 2 of this manual. The anchor bolts must be retightened after the first 250 hours of operation and every 1000 hours thereafter. If at anytime the tower has been subjected to accidental overloading, high storm winds, earthquake, etc. , the anchor bolts must be retightened. See Section 2 of this manual for anchor bolt retightening procedure. | X | |
| Tower Structure (TG1500-1900-2300B Only) | (1) Inspect the tower structure per SM20-1-1.0. See SM20-1-2.0 for tower section repair procedures. For convenience, these SM's are included at the end of Section 2 of this manual. | | X |

## Lubricating Open Gears

Never lubricate the open gears on a machine when the gears are turning. You may get caught in the gears and be injured or killed. Or your clothes could get caught and pull you into a turning gear. Use the following procedure to lubricate the open gears.

(1) Use grease from a can applied with a paddle or brush, or grease in cartridges applied with a grease gun. Grease in aerosol cans is not recommended. The propellants and solvents used in these cans thins the grease down, making it wear or run off quickly. It is recommended that the open gears be lubricated every 10 hours.

(2) Place the air controls switch on the operator's control panel in the "off" position. Shut off the engine.

(3) Easiest access to the main hoist gear is from the area down inside the revolving frame near the hatch door. Lubricate the area of the gear between main hoist countershaft without brake and main hoist countershaft with brake. See Fig. 5-1.

(4) Easiest access to the ring gear and swing pinion is from the hatch door. Open the hatch and apply the grease to the pinion at the swing motor without brake and to the accessible area of the ring gear. See Fig. 5-1. Shut the hatch after applying grease.

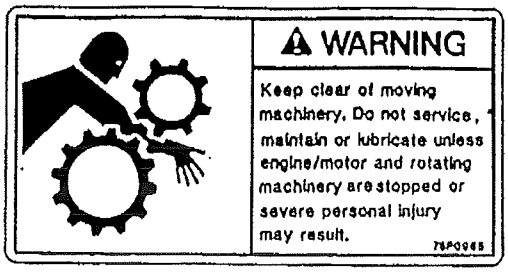


(5) Easiest access to the boom hoist gear is from the top of the machinery house. Apply grease at the area indicated in Fig. 5-1.

(6) Easiest access to the auxiliary hoist gear is from the top of the machinery house. Apply grease to the auxiliary hoist gear at the pinion as indicated in Fig. 5-1.

(7) Start the engine. Place the air control switch in the "on" position. Perform the various functions (boom, main and auxiliary hoist, swing) several times so the lubricant will be distributed around the gear.

Note: For proper lubrication, only a film of lubricant is required on the gear tooth surface. It is only necessary to maintain this grease film once it has been established. To accomplish this, large amounts of lubricant aren't required, and can be wasteful and result in a messy machine. Grease placed on the gears will be distributed throughout the gears by transferring from one gear to another as they rotate.

(8) Repeat the above procedure as necessary to obtain a lubricant film.

5

**WARNING**

To Avoid Injury, Be Sure To Shut Down The Engine And Place The Air Control Switch In The "Off" Position Each Time The Lubricant Is To Applied To Any Of The Open Gears.

Listed below are several open gear greases that are recommended for lubricating gear trains. If none of these are available in your area, your local lubricant dealer should be able to cross reference one of the lubricants listed to one that he stocks.

| | | |
|---|---|---|
| Shell<br>Cardium Compound C | Citgo<br>Citgo F-2 Grease | Chevron<br>Pinion Grease M.S. |
| Texaco<br>Crater Compound | Texaco<br>Texclad 2 | Enco<br>Cazar 2 |

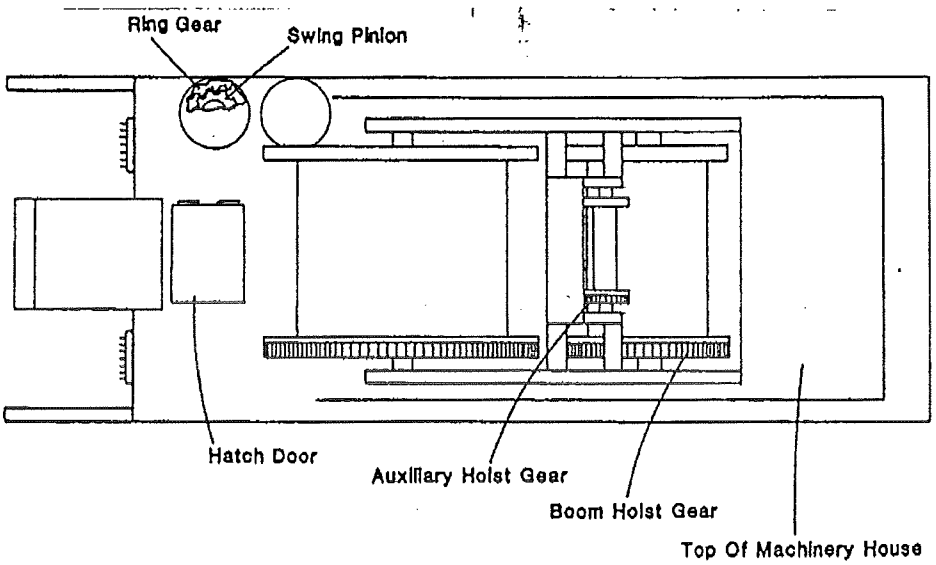


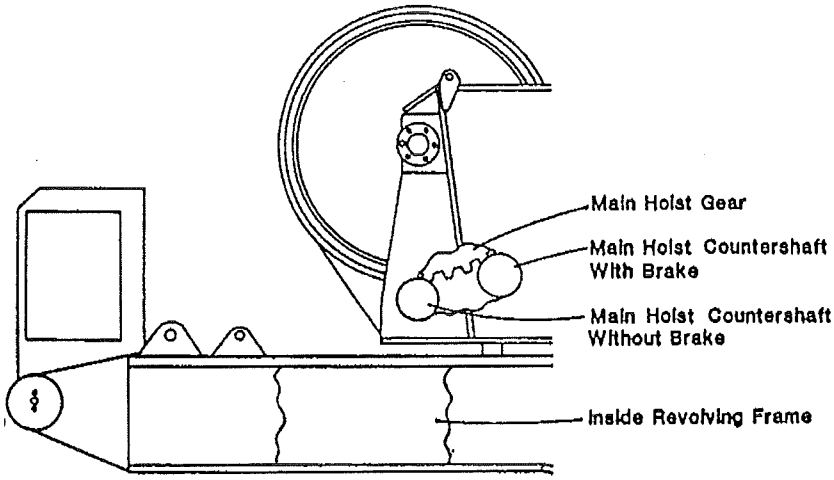


Fig. 5-1
Main Hoist, Boom Hoist, Auxiliary Hoist And Swing Open Gear Lubrication

FT35-A,FT48-A

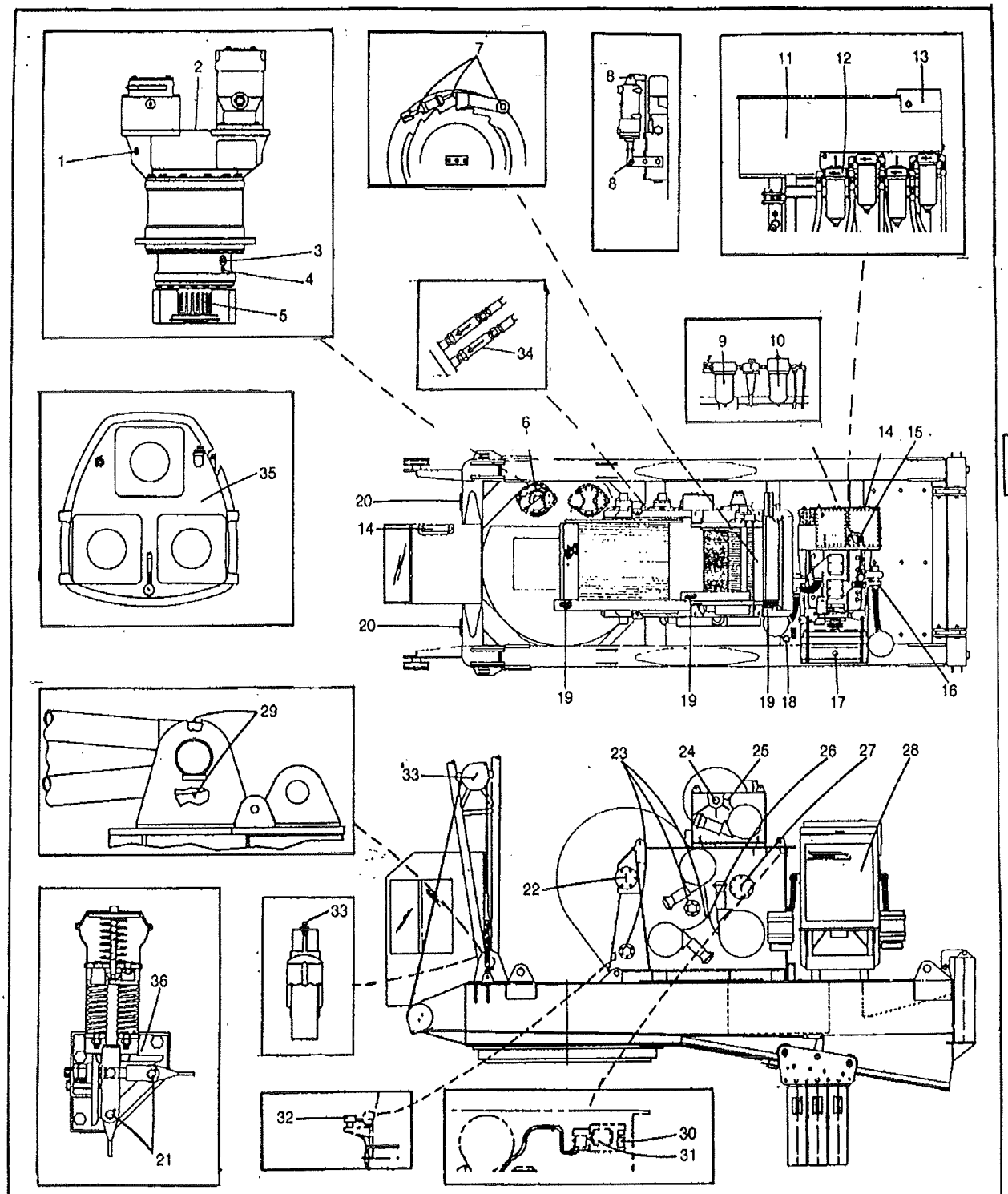


Fig. 5-2
Machine Upper Lubrication - TG1500-1900

FT122-D
FT123-D
FT562-C

| Ref. No. | TG 1500-1900 Location | Lube Points | 10 Hours | 50 Hours | 500 Hours | Seasonal (Or 1000 Hours) |
|---|---|---|---|---|---|---|
| 1 | Swing Planetary Oil Level Check Plug | 2 | Check | | | E* |
| 2 | Swing Planetary Gear Case Fill Plug | 2 | | | | |
| 3 | Swing Planetary Drain Plug | 2 | | | | |
| 4 | Planetary Lower Bearing | 2 | | A | | |
| 5 | Swing Pinion | 2 | H | | | |
| 6 | Ring Gear | All | H | | | |
| 7 | Pawl Shafts And Linkage | 3 | | M or N | | |
| 8 | Pump Positioner Linkage | 8 | | M or N | | |
| 9 | Pneumatic Filter | 1 | Check | | | |
| 10 | Pneumatic Lubricator | 1 | Check | | CC | |
| 11 | Hydraulic Reservoir | 1 | Check | | | ** |
| 12 | Charge Filter | 4 | Check | | *** | |
| 13 | Return Filter | 1 | Check | | *** | |
| 14 | Air Reservoirs | 2 | Drain | | | |
| 15 | Suction Strainer (Hydraulic Reservoir) | 1 | | | Clean | |
| 16 | Batteries | 2 | Check | | | |
| 17 | Radiator | 1 | Check | | | |
| 18 | Fuel Tank | 1 | Check | | | |
| 19 | Main Hoist, Boom Hoist & Aux. Hoist Gear Train Teeth (See Fig. 5-1) | All | H | | | |
| 20 | Turntable Bearing Grease Lines And Lower C'wt Sheaves | 20 | | A | | |
| 21 | Main Hoist, Boom Hoist & Aux. Hoist Brake Anchor Pins & Linkage | All | | M or N | | |
| 22 | Main Hoist Shaft Bearings, R.H. & L.H. | 2 | | A | | |
| 23 | Main Hoist Countershaft Bearing, L.H. | 3-1500<br>4-1900 | | A | | |
| 24 | Auxiliary Hoist Drum Shaft Bearings | 2 | | A | | |
| 25 | Auxiliary Hoist Countershaft Bearing | 1 | | A | | |
| 26 | Boom Hoist Countershaft Bearings | 1 | | A | | |
| 27 | Boom Hoist Shaft Bearings, R.H. & L.H. | 2 | | A | | |
| 28 | Engine | All | Refer to Engine Manufacturer's Manuals | | | |
| | Fuel Filters | All | Refer to Engine Manufacturer's Manuals | | | |
| | Engine Oil Filters | All | Refer to Engine Manufacturer's Manuals | | | |
| 29 | Boom Foot Pins | 4 | | A | | |
| 30 | Anti-Two Block Speed Reducer | 1 | | S or Q | | |
| 31 | Anti-Two Block Differential Gear Box | 1 | | EE | | |
| 32 | Depth Indicator Speed Reducer | 1 | | S or Q | | |
| 33 | C'wt Turnbuckle And Upper Sheave | 4 | | A | | |
| 34 | Drain Line Filter | 5 | | | Change | |
| 35 | Pump Drive Gear Box | 1 | | Check | | U |
| 36 | Brake Adjustment | 4 | | Check | Adjust | |

* Legend: A, B, CC, H, M, N See Lubrication Specifications On Pages 5-23 and 5-24 In This Section.

** See Hydraulic System Oil In Lubrication Specifications On Page 5-24 In This Section.

*** Change Every 500 Hours Or Whenever Filter Bypass Indicators Give Indication Of Plugged Or Dirty Filters, Whichever Comes First.

**WARNING**

Keep Grease, Oil And Containers Clean. Wipe All Fittings Clean Before Lubricating. Control Levers Must Be In Neutral And Engine Shut Down Before Working On The Machine. Keep Platforms, Ladders And Work Areas Clean And Free Of Oil And Grease.

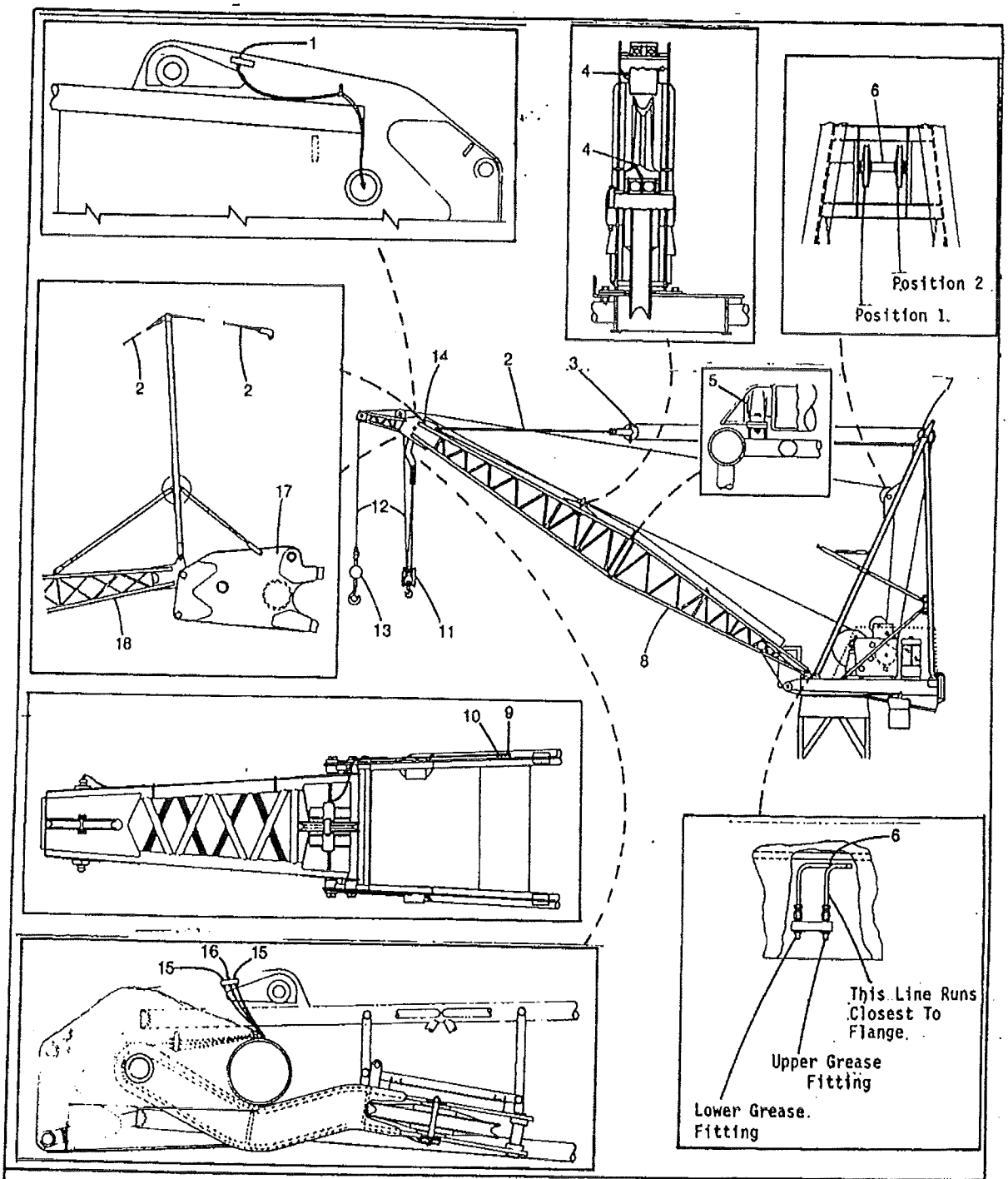


Fig. 5-3
Attachment Lubrication - TG1500-1900

FT84-D,FT216-D,FT393-D,
FT217-C,FT300-C,FT409-C
FT299-C,FT246-B

Attachment Lubrication - TG1500-1900

| Ref No. | Description | Number Of Lube Points | Lubrication Interval | Lubricant |
|---|---|---|---|---|
| 1 | Boom Head Sheave | 2 | 250 | A |
| 2 | Pendants | All | Daily | Inspect |
| 3 | Bridle Sheaves* | 3 | Seasonal | A |
| 4 | Boom Deflector Sheave | 2 | 250 | A |
| 5 | Deflector Roller | All | 250 | A |
| 6 | A/H Deflector Sheave ** ( Optional) | 2 | 50 | A |
| 7 | Mast Head Machinery * | 3 | 250 | A |
| 8 | Boom Structure | All | Daily | Inspect |
| 9 | Tip Extension Deflector Sheave (Optional) | 1 | 250 | A |
| 10 | Tip Extension Head Sheave (Optional) | 1 | 250 | A |
| 11 | Hook Block Sheaves | All | 250 | A |
| 12 | Wire Rope | All | Daily | Inspect |
| 13 | Swivel | All | 250 | A |
| 14 | Load Indicating Sheave | 2 | 250 | A |
| 15 | Hanger Block Bushing | 2 | 250 | A |
| 16 | Hanger Block Sheave | 1 | 250 | A |
| 17 | Grease Lines To Jib Strut And Jib Head Sheaves | 2 | 250 | A |
| 18 | Jib Structure | All | Daily | Inspect |

* Pertains To Machine Serial Numbers Prior To And Including 76G8-853C. Machines With Serial Numbers 76G8-1032C And Later Are Equipped With Lifetime Bearings.

** Before Lubrication, The Auxiliary Hoist Hook Must Be Raised Or Lowered To Put The A/H Deflector Sheave In One Of The Two Extreme Positions Shown Above. During Lubrication, The Lower Grease Fittings Is Used If The Sheave In Position 1. The Upper Grease Fitting Is Used If The Sheave Is In Position 2.

Lubrication Capacity Chart, TG1500-1900

| Upper Location | Capacity (Approximate) | Lubrication |
|---|---|---|
| Engine Crank Case | | |
| Detroit Diesel, 12V71-T | 9.5 Gal. ( 36 Liters) | C |
| Cummins, KT1150-C600 | 10 Gal. ( 38 Liters) | C |
| Detroit Diesel, 12V71-N | 9.5 Gal. ( 36 Liters) | C |
| Cummins, KT1150-C450 | 10 Gal. ( 38 Liters) | C |
| Cooling System | | |
| Detroit Diesel, 12V71-T | 31 Gal. (117 Liters) | * |
| Cummins, KT1150-C600 | 32 Gal. (121 Liters) | * |
| Detroit Diesel, 12V71-N | 31 Gal. (117 Liters) | * |
| Cummins, KT1150-C450 | 32 Gal. (121 Liters) | * |
| Pump Drive Gearbox (Upper) | 2.5 Gal. (9.5 Liters) | U |
| Swing Planetary | 2.8 Gal. ( 11 Liters) | E |
| Traveling Gantry Gearbox | 4.5 Qts. (4.27 Liters) | E |
| Hydraulic System | 190 Gal. (719 Liters) | ** |
| Hydrualic Reservoir (Upper) | 120 Gal. (454 Liters) | ** |
| Hydraulic Reservoir (Traveling Gantry) | 25 Gal. ( 95 Liters) | ** |
| Pneumatic Lubricaton | As Required | CC |
| Open Gears | As Required | H |
| Oil Lubrication Fittings | As Required | A |

Legend:

A H See Lubrication Specifications
C On Pages 5-23 And 5-24 Of This
E Section

* See Engine Manufacturer's Manual For Proper Coolant

** See Lubrication Specifications On Page 5-24.

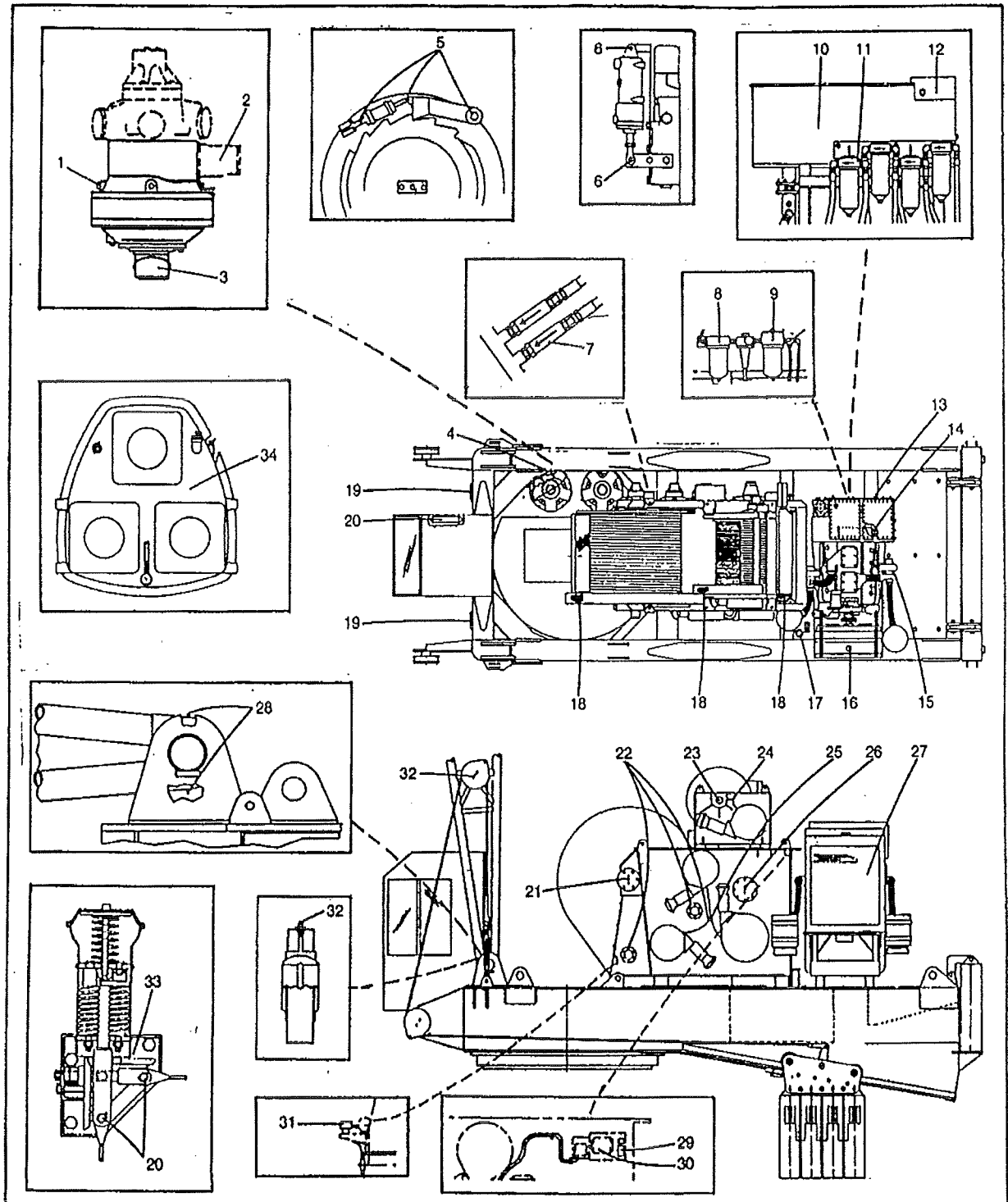


Fig. 5-4
Machine Upper Lubrication - TG2300B

FT122-D
FT123-D
FT562-C

| Ref. No. | TG-2300B Location | Lube Points | 10 Hours | 50 Hours | 500 Hours | Seasonal (Or 1000 Hours) |
|---|---|---|---|---|---|---|
| 1 | Swing Planetary Oil Level | 2 | Check | | | E*(Winter), C(Summer) |
| 2 | Swing Brake | 2 | Check | Adjust | | |
| 3 | Swing Pinion | 2 | H | | | |
| 4 | Ring Gear | All | H | | | |
| 5 | Pawl Shafts And Linkage | 3 | | M or N | | |
| 6 | Pump Positioner Linkage | 8 | | M or N | | |
| 7 | Drain Line Filter | 5 | | | Change | |
| 8 | Pneumatic Filter | 1 | Check | | | |
| 9 | Pneumatic Lubricator | 1 | Check | | CC | |
| 10 | Hydraulic Reservoir | 1 | Check | | | ** |
| 11 | Charge Filter | 4 | Check | | *** | |
| 12 | Return Filter | 1 | Check | | *** | |
| 13 | Air Reservoirs | 2 | Drain | | | |
| 14 | Suction Strainer (Hydraulic Reservoir) | 1 | | | Clean | |
| 15 | Batteries | 2 | Check | | | |
| 16 | Radiator | 1 | Check | | | |
| 17 | Fuel Tank | 1 | Check | | | |
| 18 | Main Hoist, Boom Hoist & Aux. Hoist Gear Train Teeth (See Fig. 5-1) | All | H | | | |
| 19 | Turntable Bearing Grease Lines | 18 | | A | | |
| 20 | Main Hoist, Boom Hoist & Aux. Hoist Brake Anchor Pins & Linkage | All | | M or N | | |
| 21 | Main Hoist Shaft Bearings, R.H. & L.H. | 2 | | A | | |
| 22 | Main Hoist Countershaft Bearing, L.H. | 4 | | A | | |
| 23 | Auxiliary Hoist Drum Shaft Bearings | 2 | | A | | |
| 24 | Auxiliary Hoist Countershaft Bearing | 1 | | A | | |
| 25 | Boom Hoist Countershaft Bearings | 1 | | A | | |
| 26 | Boom Hoist Shaft Bearings, R.H. & L.H. | 2 | | A | | |
| 27 | Engine | All | Refer to Engine Manufacturer's Manuals | | | |
| | Fuel Filters | All | Refer to Engine Manufacturer's Manuals | | | |
| | Engine Oil Filters | All | Refer to Engine Manufacturer's Manuals | | | |
| 28 | Boom Foot Pins | 4 | | A | | |
| 29 | Anti-Two Block Speed Reducer | 1 | | S or Q | | |
| 30 | Anti-Two Block Differential Gear Box | 1 | | EE | | |
| 31 | Depth Indicator Speed Reducer | 1 | | S or Q | | |
| 32 | C'wt Turnbuckle And Upper Sheave | 4 | | A | | |
| 33 | Brake Adjustment | 4 | Check | Adjust | | |
| 34 | Pump Drive Gear Box | 1 | | Check | | U |

* Legend: A, B, CC, H, M, N See Lubrication Specifications On Pages 5-23 and 5-24 In This Section.

** See Hydraulic System Oil In Lubrication Specifications On Page 5-24 In This Section.

*** Change Every 500 Hours Or Whenever Filter Bypass Indicators Give Indication Of Plugged Or Dirty Filters, Whichever Comes First.

**WARNING**

Keep Grease, Oil And Containers Clean. Wipe All Fittings Clean Before Lubricating. Control Levers Must Be In Neutral And Engine Shut Down Before Working On The Machine. Keep Platforms, Ladders And Work Areas Clean And Free Of Oil And Grease.

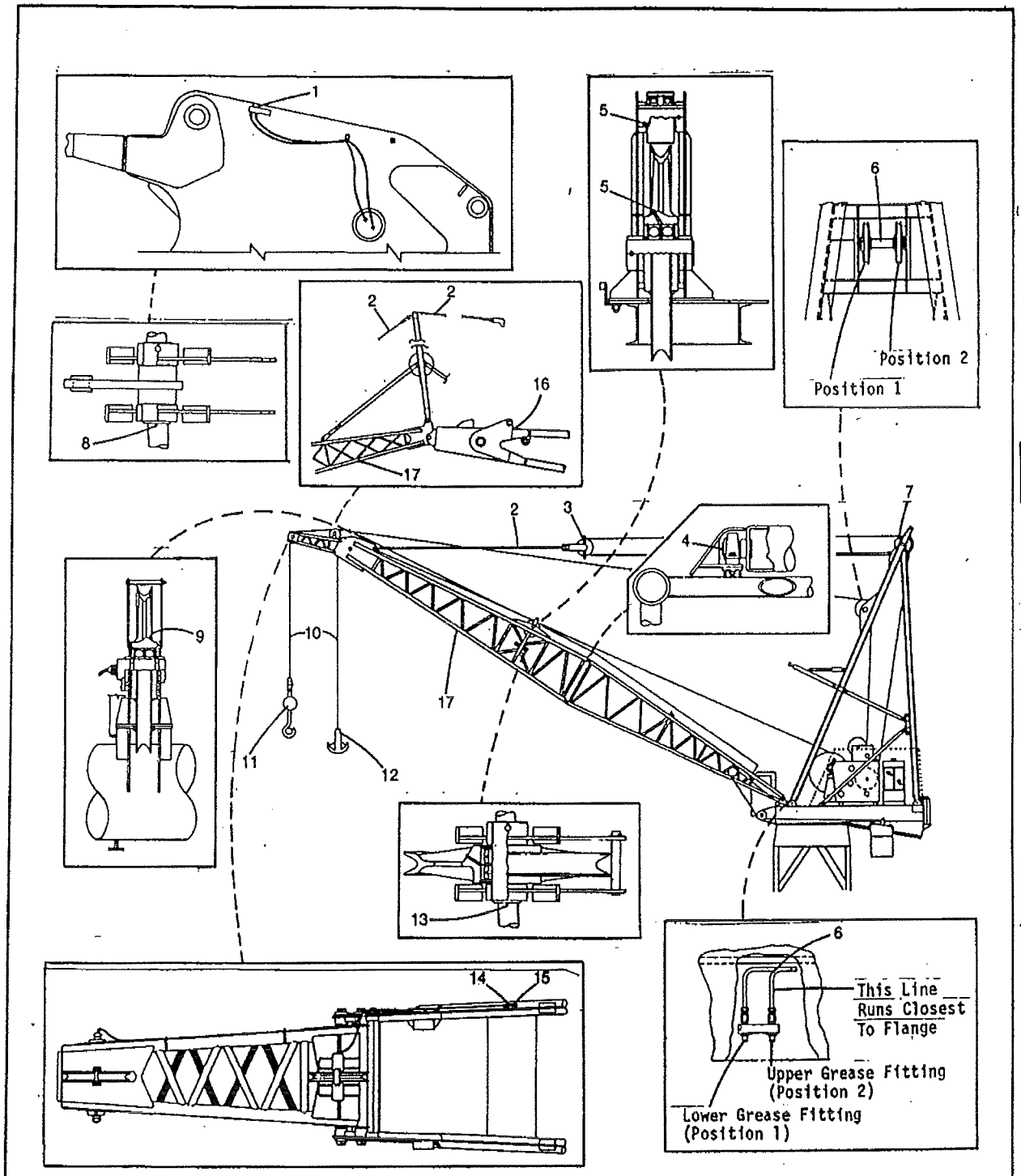


Fig. 5-5
Attachment Lubrication - 2300B

FT83-D,FT84-D,FT321-C,FT409-C,
FT413-C,FT342-A,FT393-A
FT299-C,FT246-B

Attachment Lube Diagram, TG-2300B

| Ref. No. | Description | Number Of Lube Points | Lubrication Interval | Lubricant |
|---|---|---|---|---|
| 1 | Boom Head Sheaves | 3 | 250 | A |
| 2 | Pendants | All | Daily | Inspect |
| 3 | Bridle Sheaves* | 3 | Seasonal | A |
| 4 | Deflector Roller | All | 250 | A |
| 5 | Boom Deflector Sheave | 2 | 250 | A |
| 6 | A/H Deflector Sheave **(Optional) | 2 | 50 | A |
| 7 | Mast Head Machinery* | 3 | 250 | A |
| 8 | Dead End Anchor | 1 | 250 | A |
| 9 | Load Indicator Sheave | 2 | 250 | A |
| 10 | Wire Rope | All | Daily | Inspect |
| 11 | Swivel | All | 250 | A |
| 12 | Hook Block Sheave | All | 250 | A |
| 13 | Crossover Sheave | 1 | 250 | A |
| 14 | Tip Extension Head Sheave (Optional) | 1 | 250 | A |
| 15 | Tip Extension Deflector Sheave (Optional) | 1 | 250 | A |
| 16 | Grease Lines To Jib Strut And Jib Head Sheaves | 2 | 250 | A |
| 17 | Boom And Jib Structure | All | Daily | Inspect |

* Pertains To Machine Serial Numbers Prior To And Including 76G8-853C. Machines With Serial Numbers 76G8-1032C And Later Are Equipped With Lifetime Bearings.

** Before Lubrication, The Auxiliary Hoist Hook Must Be Raised Or Lowered To Put The A/H Deflector Sheave In One Of The Two Extreme Positions Shown Above. During Lubrication, The Lower Grease Fittings Is Used If The Sheave In Position 1. The Upper Grease Fitting Is Used If The Sheave Is In Position 2.

Lubrication Capacity Chart, TG-2300B

| Upper Location | Capacity (Approximate) | Lubrication |
|---|---|---|
| Engine Crank Case | | |
| Detroit Diesel, 12V71-T | 9.5 Gal. ( 36 Liters) | C |
| Cummins, KT1150-C600 | 10 Gal. ( 38 Liters) | C |
| Cooling System | | |
| Detroit Diesel, 12V71-T | 31 Gal. (117 Liters) | * |
| Cummins, KT1150-C600 | 32 Gal. (121 Liters) | * |
| Pump Drive Gearbox (Upper) | 2.5 Gal. ( 9.5 Liters) | U |
| SVT Swing Planetary | 2.8 Gal. ( 11 Liters) | E |
| Swing Planetary (G030) | 2.3 Gal. ( 9 Liters) | E |
| Traveling Gantry Gearbox | 4.5 Qts. (4.27 Liters) | E |
| Hydraulic System | 190 Gal. (719 Liters) | ** |
| Hydraulic Reservoir (Upper) | 120 Gal. (454 Liters) | ** |
| Hydraulic Reservoir (Traveling Gantry) | 25 Gal. ( 95 Liters) | ** |
| Pneumatic Lubricator | As Required | CC |
| Open Gears | As Required | H |
| Oil Lubrication Fittings | As Required | A |

Legend:
A H C E — See Lubrication Specifications on Pages 5-23 And 5-24 Of This Section

* See Engine Manufacturer's Manual For Proper Coolant.

** See Lubrication Specification On Page 5-24.

Lubrication Specifications

## A Heavy Duty E.P Bearing Grease (NLGI Grade #2)

This grease shall be a homogenous combination of refined mineral oil and lithium soap. This grease shall not contain any fillers which adversely affect the lubricating qualities of the product. It may have additives that give a high degree of protection against corrosion of metals and oxidation of the grease. It shall be free of any disagreeable odor.

The product shall be a non-corrosive, short fiber grease of excellent mechanical and storage stability.

The mineral oil shall meet the following specifications.

Viscosity at 210° F. (99.6° C.) (S.U.S.).....80-100
Viscosity Index.....65 Min.
Timken Test Lever Load.....40 Min.
Pour Point.+15° F. (-9.5° C.) Max.

The grease shall have the following physical and chemical properties:
Penetration, Worked @ 77° F. (25.24° C.) (60 Strokes) Units.....265-295
Penetration Change After 10,000 Strokes.....25% Max.
Dropping Point....+350° F. (+178° C.) Min.
Lithium Soap.....6-14%
Water.....0.10% Max.

Application: Bearings

The supplier assumes all responsibility of product and patent liability.

## C SAE 10W30 Detergent Engine Oil

A heavy duty refined petroleum product, (with detergent and anti-oxidant additives), to meet internal combustion engine supplement one specifications.

A.P.I. Gravity. . . . 27.0 Min.
Flash Point . . . . . .425 Min.
Viscosity at 210°F (99.6°C). . . . . .61-70 (S.U.S.)

Carbon Residue % (Inclused Ash From Additives). . . . 1.8 Max.
Viscosity Index. . . . .90 Min.

The supplier assumes all responsibility of product and patent liability.

## E 80W/90 Extreme Pressure Multigear Lubricant

An extreme pressure gear lubricant containing anti-foam protection, oxidation stability, anti-rust and anti-corrosion qualities. It must meet or exceed military specifications MIL-L-2104C.

A.P.I Gravity. . . . . 25.1
Flash Point, °F(°C). .400 (204)
S.U.S. Viscosity at 210°F (99.6°C) . . . . . 79.9
Viscosity Index. . . . . 97
Channel Point. 0°F (-18°C) Max.
Timpken Test Lever Load . . . .50°F (22.68kg) Min.

The supplier assumes all responsibility of product and patent liability.

## CC SAE 10W Engine Oil

While recommended primarily for use as an engine oil, this oil may also be used in transmissions, gear cases and hydraulic systems where the use of heavy duty motor oil is recommended by the equipment manufacturer.

Flash, COC, °F(°C).....420 (217)
Pour Point, °F(°C).....-25 (-32)
Viscosity, SUS @ 100° F (38° C).....208
Viscosity, SUS @ 210° F (99° C).....48
Viscosity Index.....110

The supplier assumes all responsibility for product and patent liability.

## DD Grease, Molytex EP-2

This grease is a lithium base extreme pressure grease containing molybdenum disulfide.

Viscosity at 100°F (38°C)....918
Viscosity at 210°F (100°C)....80
Dropping Point, °F(°C)...392(202)
Guide To Usable Temperature
Max,°F(°C).....250(123)
Min,°F(°C).....-23(-31)

The supplier assumes all responsibility for product and patent liability.

## EE Open Gear Grease

This specification covers an inorganic base, extreme pressure, water repellant open gear lubricant.

Viscosity at 100° F (38° C), SSU. .....1560
Viscosity at 210° F (99.6° C), SSU.....89
Flash Point, °F (°C)... 480 (251)
Pour Point, °F (°C).....0 (0)
Molub-Alloy Solids, % Min.....18

The supplier assumes all responsibility for product and patent liability.

5

## H Open Gear Grease

This grease shall be a homogeneous combination of carefully blended mineral oil and calcium soap.

API Gravity.....18.9
Flash, CCC° F.....410 (211.6° C.)
Viscosity at 210° F.
(99.6° C.) (S.U.S.).....178

Grease Specifications:

Penetration, ASTM
(Worked at 77° F.)
(25.2° C.).....276
(Unworked at 77° F.)
(25.2° C.).....242
Dropping
Point.....224° F. (107.5° C.)
Calcium Soap.....9.1%

The supplier assumes all responsibility of product and patent liability.

## M SAE 50W Oil

A refined petroleum base product with anti-rust and anti-oxidation inhibitors meeting the following specifications:

Viscosity at 100° F.
(38° C.).....1050 SUV
Approx. Viscosity At
210° F. (99.6° C.).....88-92 SUV
Pour
Point.....+10° F. (-12° C.)

Note: Use in temperature above 32° F. (0° C.)

The supplier assumes all responsibility of product and patent liability.

## N SAE 20W Oil

A refined petroleum base product with anti-rust and anti-oxidation inhibitors meeting the following specifications:

Viscosity at 100° F.
(38° C.).....380-400 SUV
Viscosity at 210° F.
(99.6° C.).....49 SUV Max.

Note: Use in temperatures below 32° F. (0° C.).

The supplier assumes all responsibility of product and patent liability.

## S Agma NO. 7 Oil (Above 32° F. [0° C])

A petroleum base product with anti-corrosion and foam suppressor qualities meeting the following specifications:

Gravity.....21.1
Flash Point.....505
Pour Point.....-10
Viscosity at 100° F..... 2350
S.U.S. at 210° F.....135.0
Viscosity Index.....87

The supplier assumes all responsibility for product and patent liability.

## Q Agma No. 7 Oil (Below 32° F [0° C])

A petroleum base product with anti-corrosion and foam suppressor qualities meeting the following specifications:

Gravity.....27.1
Flash Point.....550° F. Min.
Fire Point.....630° F. Min.
Viscosity at 210° F.....135-145
Pour Point.....25° F.
Carbon Residue.....0.3%
Ash.....None
Saponification.....10.7
Fatty Oils.....5%

The supplier assumes all responsibility for product and patent liability

## U SAE 80W - 85W - 140 Multi-Grade Gear Lubricant

An extreme pressure gear lubricant containing defoamant additives. It must meet or exceed USA Government specification No. MIL-L-21058.

API Gravity.....26.8 Min.
Flash
Point.....310° F. (155° C.) Min.
Viscosity at 210° F.
(99.6° C.) (S.U.S.).....128.4
Viscosity Index.....140 Min.
Non-Channeling
Temp.....-40° F. (-40° C.) Max.

Timken Test
Lever Load....40 lb. (18 kg.) Min.

The supplier assumes all responsibility of product and patent liability.

## Hydraulic System Oil

Use only FMC Hydraulic Oil. Warranty is void if incorrect oil is used. Incorrect oil may result in damage to hydraulic components. During machine operation, the hydraulic oil temperature as read in the cab should not exceed the maximum system temperature listed below. FMC Hydraulic Oil is available through your FMC Distributor in the following viscosities and quantities:

FMC Hi-Performance Hyd. Oils
(Prefiltered)

5 VIS (Grade 15)

Temperature Range:
-35°F to 20°F (-37°C to -7°C.)
(Ambient)
85°F (30°C) Max. System*
60°F (16°C) Max. Reservoir
5 Gal. ( 19L) - 830661001
55 Gal. (209L) - 830661002

5 VIS 20 (Grade 32)

Temperature Range:
-5°F to 50° F. (-20.7°C to 10°C.)
(Ambient)
115°F (46°C) Max. System*
100°F (38°C) Max. Reservoir
5 Gal. ( 19L) 830662001
55 Gal. (209L) - 830662002

10 VIS 20 (Grade 46)

Temperature Range:
10°F. to 90°F. (-12°C. to 32°C)
(Ambient)
130°F (55°C) Max. System*
115°F (46°C) Max. Reservoir
5 Gal. ( 19L) - 830663001
55 Gal. (209L) - 830663002

20 VIS 40 (Grade 100)

Temperature Range:
30°F to 115°F (-1°C to 47°C.)
(Ambient)
160°F (72°C) Max. System*
150°F (66°C) Max. Reservoir
5 Gal. ( 19L) - 830664001
55 Gal. (209L) - 830664002

* Maximum system temperatures must be measured at the motor case drain ports and are displayed to to the operator on the control panel.

## Hydraulic System Check And Fill Procedure

The oil level must be read at the sight gauge mounted on the hydraulic reservoir (sump tank). See Fig. 5-10. The oil level will vary with the temperature of the oil. See Fig. 5-7.

To provide proper cooling, and to prevent pump failures from aeration and cavitation, the oil level must be between the full and add marks on the label.

**CAUTION**

Do Not Overfill. Overfilling Could Result In Overflow As The Oil Temperature Increases.

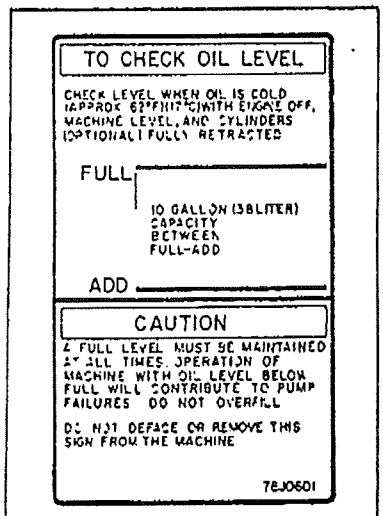


Fig. 5-7 FT383-A
Sump Tank Oil Level Label

To Fill:
(1) Remove breather cap.
(2) Add hydraulic oil as necessary to maintain proper oil level.
(3) Replace breather cap.

Consult the lubrication capacity chart for the proper quantity and type of hydraulic oil to use.

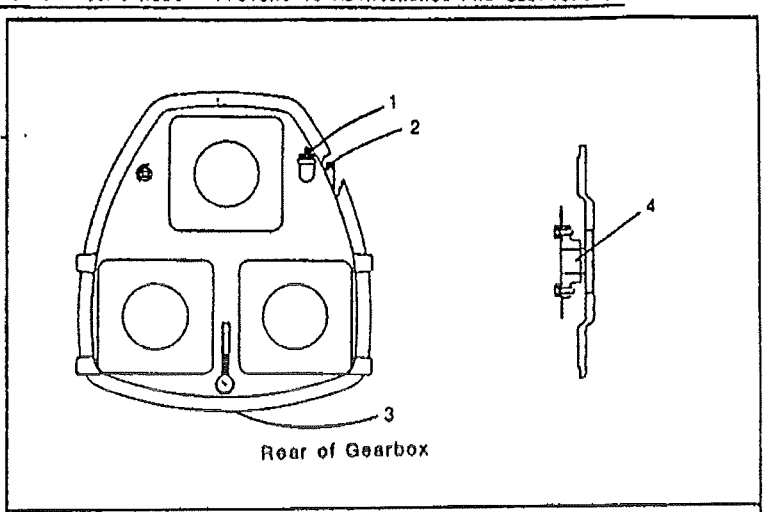


Fig. 5-8 FT396-A
Pump Drive Gearbox

| Point | Qty | HPD Section | Part | Fitting | Lubricant* | Frequency |
|---|---|---|---|---|---|---|
| (1) | 1 | Gear Drive | Oil Fill & Vent | Vent Plug | U | Seasonal |
| (2) | 1 | Gear Drive | Oil Level Dipstick | Dipstick | U | 50 Hours |
| (3) | 1 | Gear Drive | Oil Drain | Pipe Plug | U | Seasonal |
| (4) | 1 | Disc Drive Input | Internal Spline | None | A | At Overhaul |

* See Lubrication Chart, Page 5-17.

Note: Use only prefiltered oil. Store oil in clean and sealed containers to prevent possible contamination of oil due to foreign material, dirt particles, or moisture.

## Pump Drive Gearbox Check And Change Procedure

See Fig. 5-8 for lubrication points and schedule.

A sight gauge is provided to check the oil level of the pump drive gearbox. The sight gauge is located between the boom and auxiliary hoist pumps. See item 19 in Fig. 5-15. The oil level should be maintained at approximately three inches (76.2mm) above the center of the temperature gauge.

Add oil as necessary through the breather plug port. See the lubrication capacity chart for correct quantity and type of lubrication.

To change the oil, proceed as follows:
(1) Start the engine to warm the oil and stir up the sludge in the gear case.
(2) Stop the engine and remove the drain plug from the rear (engine side) of the gearbox. Allow all the oil to drain thoroughly.
(3) Replace the drain plug and remove the breather plug. Fill the unit with oil. Replace the breather plug.

## Filter Change Procedure

The charge and return filters (Figs. 5-9,5-10, and 5-11) must be changed after the first 50 hours of operation on a new machine and every 500 hours thereafter. If the filter light in the operator's cab comes on and stays on before the 500 hour interval, the filter element must be changed.

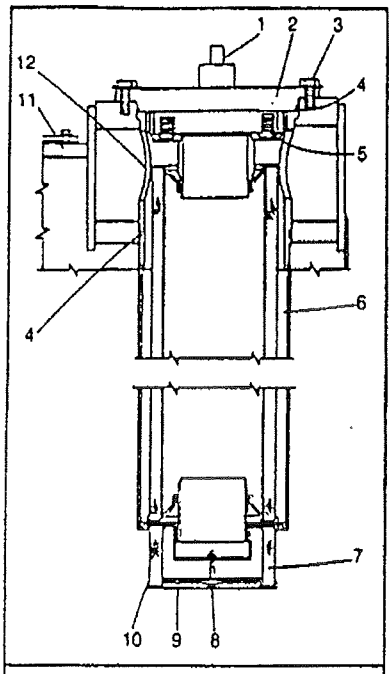


Fig. 5-9 FT218-A
Return Filter

(1) Sending Unit
(2) Cover Assembly
(3) Locking Capscrew W/Washer
(4) "O" Ring
(5) Bypass Valve
(6) Filter Element
(7) Diffuser
(8) Capscrew
(9) Washer
(10) Retaining Plate
(11) Hydraulic Reservoir
(12) Filter Housing

When servicing a filter, keep hands, tools, and working area as clean as possible or more dirt may be added to the system than the filter element has removed.

To Change The Charge Filter Element, Proceed As Follows:

(1) Land all loads and shut the machine down.
(2) Close both the suction line and the oil cooler gate valves. (See items 5 and 6 in Fig. 5-15.)
(3) Wipe external dirt from the head assembly and the filter housing.

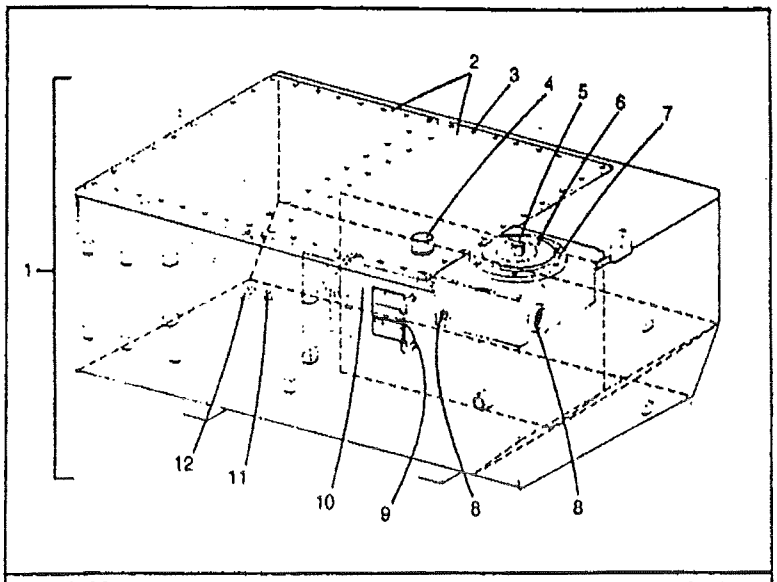


Fig. 5-10 FT220-C
Hydraulic Reservoir (Right Hand Side)

(1) Hydraulic Reservoir
(2) Covers
(3) Capscrew
(4) Breather and Fill Port
(5) Sending Unit
(6) Filter Cover
(7) Filter Housing
(8) Filter Inlet
(9) Sight Gauge
(10) Suction Strainer (Dotted Line)
(11) Water Drain Plug
(12) Drain Plug

(4) Remove drain plug from filter housing. Allow filter to drain thoroughly. Removing the bleed plug will allow faster draining.

**WARNING**

To Avoid Burns From Hot Oil, Use Caution When Removing Drain Plug From Filter Housing.

(5) Unscrew the filter housing from the head assembly.
(6) Remove the filter element from the filter housing.
(7) Remove the back-up ring and "O" ring from the head assembly.
(8) Inspect inside of filter housing for any dirt. Clean filter housing with diesel fuel or an approved solvent.

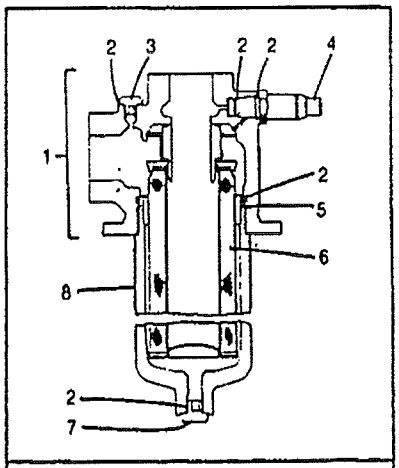


Fig. 5-11 FT109-B
Charge Filter

(1) Head Assembly
(2) "O" Ring
(3) Bleed Plug
(4) Sending Unit
(5) Back-Up Ring
(6) Filter Element
(7) Drain Plug
(8) Filter Housing

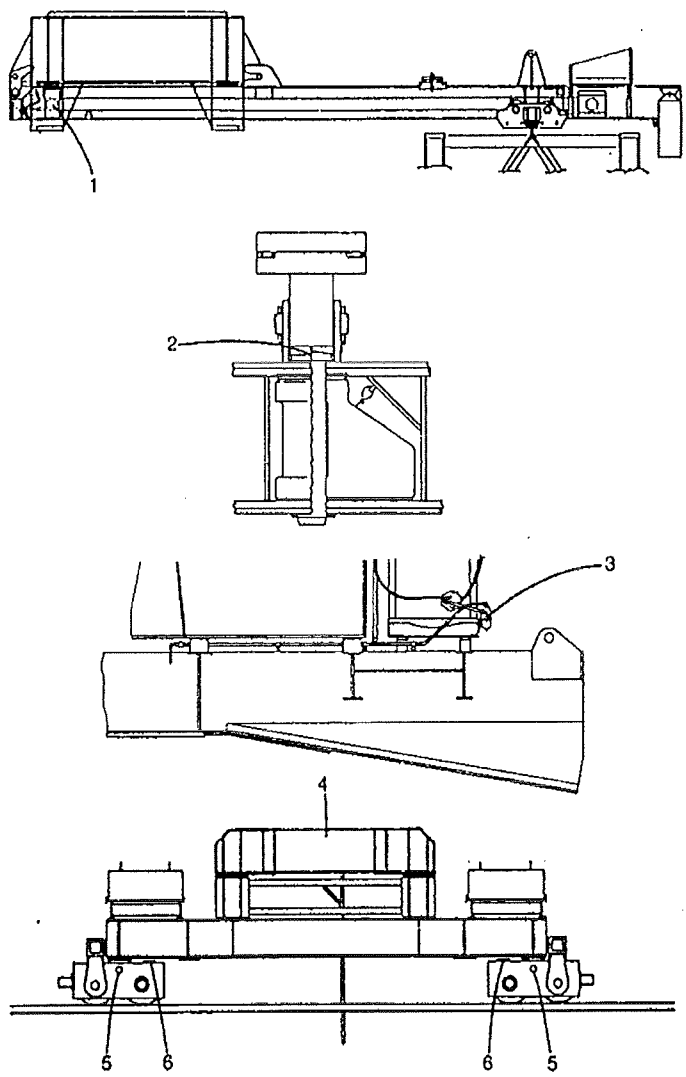


Fig. 5-8
Climbing/Bogie Lubrication Points

| Ref. No. | Location | Lube Points | 50 Hours | 500 Hours |
|---|---|---|---|---|
| 1 | Monorail Speed Reducer | 1 | S or Q | |
| 2 | Climbing Foot | 4 | A | |
| 3 | Climbing/Bogie Filter Element | 1 | | Change |
| 4 | Rotating Joint | 1 | A | |
| 5 | Trunion Pin | 4 | A | |
| 6 | Bogie Truck | 8 (Each Truck) | A | |

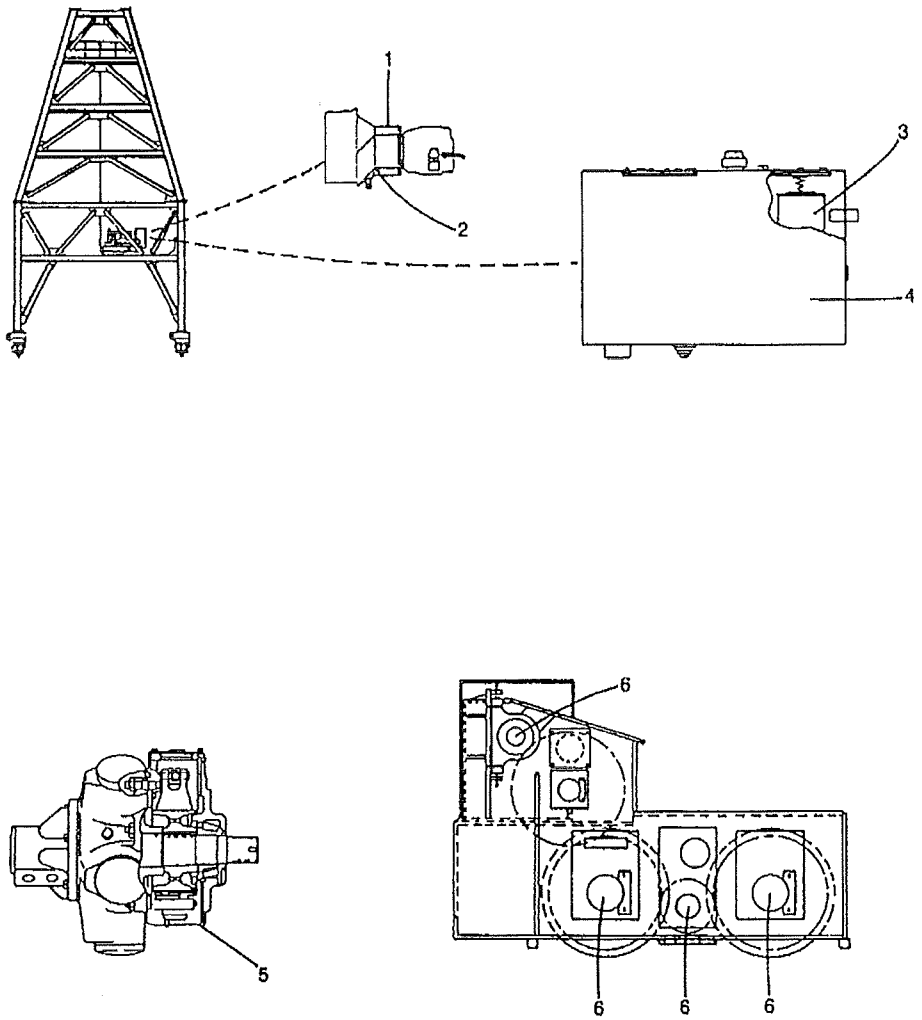


Fig. 5-9
Traveling Gantry Lubrication Points

| Ref. No. | Location | Lube Points | 10 Hours | 50 Hours | 500 Hours | Seasonal Or 1000 Hours |
|---|---|---|---|---|---|---|
| 1 | Gearbox Oil Level | 1 | Check | | | Change |
| 2 | Grease Fitting On Gearbox | 1 | | A | | |
| 3 | Return Filter | 1 | | | Change | |
| 4 | Hydraulic Reservoir | 1 | Check | | | Change |
| 5 | Brake Assembly | 4 | | A | | |
| 6 | Gantry Truck | 6 (Each Truck) | | A | | |

Lubrication Specifications

## A Heavy Duty E.P Bearing Grease (NLGI Grade #2)

This grease shall be a homogenous combination of refined mineral oil and lithium soap. This grease shall not contain any fillers which adversely affect the lubricating qualities of the product. It may have additives that give a high degree of protection against corrosion of metals and oxidation of the grease. It shall be free of any disagreeable odor.

The product shall be a non-corrosive, short fiber grease of excellent mechanical and storage stability.

The mineral oil shall meet the following specifications.

Viscosity at 210° F. (99.6° C.) (S.U.S.).....80-100
Viscosity Index.....65 Min.
Timken Test Lever Load.....40 Min.
Pour Point,+15° F. (-9.5° C.) Max.

The grease shall have the following physical and chemical properties:
Penetration, Worked @ 77° F. (25.24° C.) (60 Strokes) Units.....265-295
Penetration Change After 10,000 Strokes.....25% Max.
Dropping Point....+350° F. (+178° C.) Min.
Lithium Soap.....6-14%
Water.....0.10% Max.

Application: Bearings

The supplier assumes all responsibility of product and patent liability.

## C SAE 10W30 Detergent Engine Oil

A heavy duty refined petroleum product, (with detergent and anti-oxidant additives), to meet internal combustion engine supplement one specifications.

A.P.I. Gravity. . . . 27.0 Min.
Flash Point . . . . . .425 Min.
Viscosity at 210°F (99.6°C). . . . . .61-70 (S.U.S.)

Carbon Residue % (Inclused Ash From Additives). . . . 1.8 Max.
Viscosity Index. . . . .90 Min.

The supplier assumes all responsibility of product and patent liability.

## E 80W/90 Extreme Pressure Multigear Lubricant

An extreme pressure gear lubricant containing anti-foam protection, oxidation stability, anti-rust and anti-corrosion qualities. It must meet or exceed military specifications MIL-L-2104C.

A.P.I Gravity. . . . . 25.1
Flash Point, °F(°C). .400 (204)
S.U.S. Viscosity at 210°F (99.6°C) . . . . . 79.9
Viscosity Index. . . . . 97
Channel Point. 0°F (-18°C) Max.
Timpken Test Lever Load . . . .50°F (22.68kg) Min.

The supplier assumes all responsibility of product and patent liability.

## CC SAE 10W Engine Oil

While recommended primarily for use as an engine oil, this oil may also be used in transmissions, gear cases and hydraulic systems where the use of heavy duty motor oil is recommended by the equipment manufacturer.

Flash, COC, °F(°C).....420 (217)
Pour Point, °F(°C).....-25 (-32)
Viscosity, SUS @ 100° F (38° C).....208
Viscosity, SUS @ 210° F (99° C).....48
Viscosity Index.....110

The supplier assumes all responsibility for product and patent liability.

## DD Grease, Molytex EP-2

This grease is a lithium base extreme pressure grease containing molybdenum disulfide.

Viscosity at 100°F (38°C)....918
Viscosity at 210°F (100°C)....80
Dropping Point, °F(°C)...392(202)
Guide To Usable Temperature
Max,°F(°C).....250(123)
Min,°F(°C).....-23(-31)

The supplier assumes all responsibility for product and patent liability.

## EE Open Gear Grease

This specification covers an inorganic base, extreme pressure, water repellant open gear lubricant.

Viscosity at 100° F (38° C), SSU. .....1560
Viscosity at 210° F (99.6° C), SSU.....89
Flash Point, °F (°C)... 480 (251)
Pour Point, °F (°C).....0 (0)
Molub-Alloy Solids, % Min.....18

The supplier assumes all responsibility for product and patent liability.

5

## H Open Gear Grease

This grease shall be a homogeneous combination of carefully blended mineral oil and calcium soap.

API Gravity.....18.9
Flash, CCC° F.....410 (211.6° C.)
Viscosity at 210° F.
(99.6° C.) (S.U.S.).....178

Grease Specifications:

Penetration, ASTM
(Worked at 77° F.)
(25.2° C.).....276
(Unworked at 77° F.)
(25.2° C.).....242
Dropping
Point.....224° F. (107.5° C.)
Calcium Soap.....9.1%

The supplier assumes all responsibility of product and patent liability.

## M SAE 50W Oil

A refined petroleum base product with anti-rust and anti-oxidation inhibitors meeting the following specifications:

Viscosity at 100° F.
(38° C.).....1050 SUV
Approx. Viscosity At
210° F. (99.6° C.).....88-92 SUV
Pour
Point.....+10° F. (-12° C.)

Note: Use in temperature above 32° F. (0° C.)

The supplier assumes all responsibility of product and patent liability.

## N SAE 20W Oil

A refined petroleum base product with anti-rust and anti-oxidation inhibitors meeting the following specifications:

Viscosity at 100° F.
(38° C.).....380-400 SUV
Viscosity at 210° F.
(99.6° C.).....49 SUV Max.

Note: Use in temperatures below 32° F. (0° C.).

The supplier assumes all responsibility of product and patent liability.

## S Agma NO. 7 Oil (Above 32° F. [0° C])

A petroleum base product with anti-corrosion and foam suppressor qualities meeting the following specifications:

Gravity.....21.1
Flash Point.....505
Pour Point.....-10
Viscosity at 100° F..... 2350
S.U.S. at 210° F.....135.0
Viscosity Index.....87

The supplier assumes all responsibility for product and patent liability.

## Q Agma No. 7 Oil (Below 32° F [0° C])

A petroleum base product with anti-corrosion and foam suppressor qualities meeting the following specifications:

Gravity.....27.1
Flash Point.....550° F. Min.
Fire Point.....630° F. Min.
Viscosity at 210° F.....135-145
Pour Point.....25° F.
Carbon Residue.....0.3%
Ash.....None
Saponification.....10.7
Fatty Oils.....5%

The supplier assumes all responsibility for product and patent liability

## U SAE 80W - 85W - 140 Multi-Grade Gear Lubricant

An extreme pressure gear lubricant containing defoamant additives. It must meet or exceed USA Government specification No. MIL-L-2105B.

API Gravity.....26.8 Min.
Flash
Point.....310° F. (155° C.) Min.
Viscosity at 210° F.
(99.6° C.) (S.U.S.).....128.4
Viscosity Index.....140 Min.
Non-Channeling
Temp.....-40° F. (-40° C.) Max.

Timken Test
Lever Load....40 lb. (18 kg.) Min.

The supplier assumes all responsibility of product and patent liability.

## Hydraulic System Oil

Warranty is void if incorrect oil is used. Incorrect oil may result in damage to hydraulic components. During machine operation, the hydraulic oil temperature as read in the cab should not exceed the maximum system temperature listed below.

(Prefiltered)

### 5 VIS (Grade 15)

Temperature Range:
-35°F to 20°F (-37°C to -7°C.)
(Ambient)
85°F (30°C) Max. System*
60°F (16°C) Max. Reservoir
5 Gal. ( 19L) - 830661001
55 Gal. (209L) - 830661002

### 5 VIS 20 (Grade 32)

Temperature Range:
-5°F to 50° F. (-20.7°C to 10°C.)
(Ambient)
115°F (46°C) Max. System*
100°F (38°C) Max. Reservoir
5 Gal. ( 19L) 830662001
55 Gal. (209L) - 830662002

### 10 VIS 20 (Grade 46)

Temperature Range:
10°F. to 90°F. (-12°C. to 32°C)
(Ambient)
130°F (55°C) Max. System*
115°F (46°C) Max. Reservoir
5 Gal. ( 19L) - 830663001
55 Gal. (209L) - 830663002

### 20 VIS 40 (Grade 100)

Temperature Range:
30°F to 115°F (-1°C to 47°C.)
(Ambient)
160°F (72°C) Max. System*
150°F (66°C) Max. Reservoir
5 Gal. ( 19L) - 830664001
55 Gal. (209L) - 830664002

* Maximum system temperatures must be measured at the motor case drain ports and are displayed to to the operator on the control panel.

## Hydraulic System Check And Fill Procedure

The oil level must be read at the sight gauge mounted on the hydraulic reservoir (sump tank). See Fig. 5-13. The oil level will vary with the temperature of the oil. See Fig. 5-10.

To provide proper cooling, and to prevent pump failures from aeration and cavitation, the oil level must be between the full and add marks on the label.

**CAUTION**

Do Not Overfill. Overfilling Could Result In Overflow As The Oil Temperature Increases.

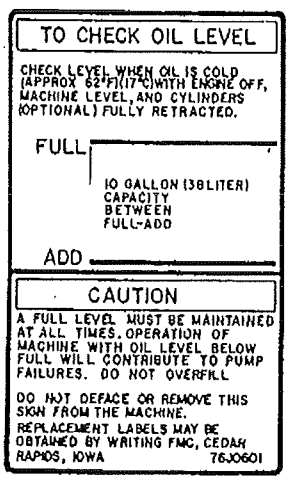


Fig. 5-10 FT383-A
Sump Tank Oil Level Label

To Fill:
(1) Remove breather cap.
(2) Add hydraulic oil as necessary to maintain proper oil level.
(3) Replace breather cap.

Consult the lubrication capacity chart for the proper quantity and type of hydraulic oil to use.

Note: Use only prefiltered oil. Store oil in clean and sealed containers to prevent possible contamination of oil due to foreign material, dirt particles, or moisture.

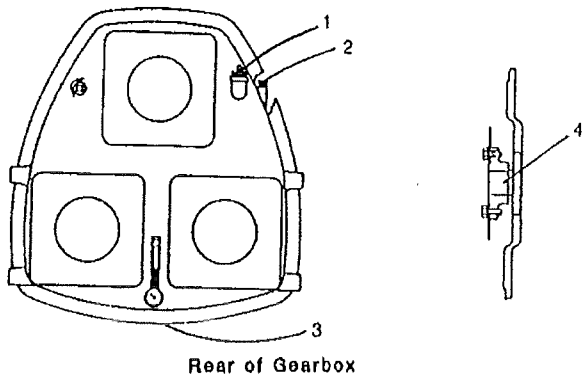


Fig. 5-11 FT396-A
Pump Drive Gearbox

| Point | Qty | HPD Section | Part | Fitting | Lubricant* | Frequency |
|---|---|---|---|---|---|---|
| (1) | 1 | Gear Drive | Oil Fill & Vent | Vent Plug | U | Seasonal |
| (2) | 1 | Gear Drive | Oil Level Dipstick | Dipstick | U | 50 Hours |
| (3) | 2 | Gear Drive | Oil Drain | Pipe Plug | U | Seasonal |
| (4) | 1 | Disc Drive Input | Internal Spline | None | A | At Overhaul |

* See Lubrication Chart, Page 5-23

## Pump Drive Gearbox Check And Change Procedure

See Fig.5-11 for lubrication points and schedule.

A sight gauge is provided to check the oil level of the pump drive gearbox. The sight gauge is located between the boom and auxiliary hoist pumps. See Fig. 5-11 The oil level should be maintained at approximately three inches (76mm) above the center of the temperature gauge.

Add oil as necessary through the breather plug port. See the lubrication capacity chart for correct quantity and type of lubrication.

To change the oil, proceed as follows:
(1) Start the engine to warm the oil and stir up the sludge in the gear case.
(2) Stop the engine and remove the drain plug from the rear (engine side) of the gearbox. Allow all the oil to drain thoroughly.
(3) Replace the drain plug and remove the breather plug. Fill the unit with oil. Replace the breather plug.

## Filter Change Procedure

The hydraulic filter elements (Figs.5-12 and 5-13) must be changed after the first 50 hours of operation on a new machine and every 500 hours thereafter. If the filter indicators pop out before the 500 hour interval, the filter element must be changed.

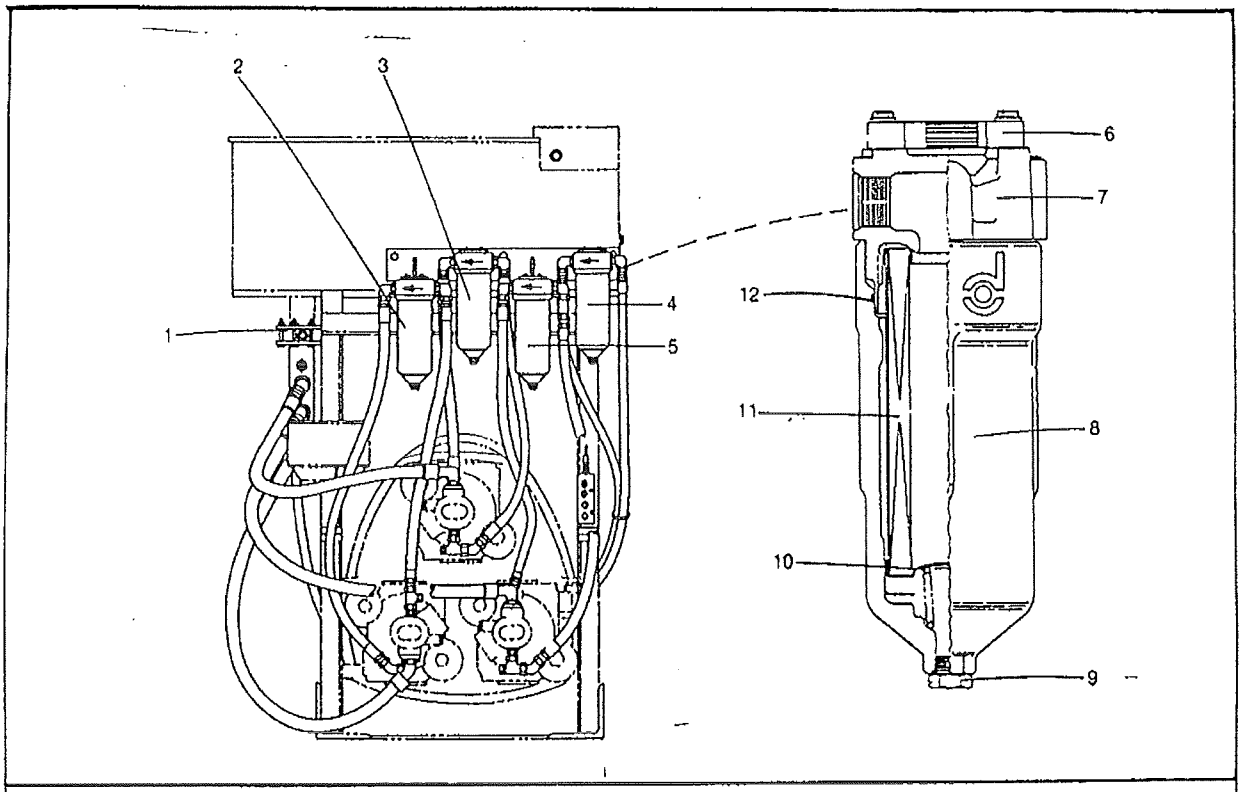


Fig. 5-12 FT676-C
Charge Filters
(1) Suction Line Shut Off Valve
(2) Boom Hoist Circuit Filter
(3) Main Hoist Circuit Filter
(4) Swing Circuit Filter
(5) Auxiliary Hoist Circuit Filter
(6) Filter Indicator
(7) Head Assembly
(8) Body
(9) Drain Plug With O-Ring
(10) Spring
(11) Filter Element
(12) O-Ring

When servicing a filter, keep hands, tools, and working area as clean as possible or more dirt may be added to the system than the filter element has removed.

To change the charge filter elements, proceed as follows. See Fig. 5-12.

(1) Land all loads and shut the machine down.
(2) Close the suction line shutoff valve.
(3) Wipe external dirt from the filter head assembly and the filter housing.
(4) Place an oil pan or container under filter bowl to collect oil as it drains from the filter.
(5) Loosen drain plug from filter body and allow oil to drain thoroughly.

**WARNING**

To Avoid Burns From Hot Oil, Use Caution When Removing Drain Plug From Filter Housing.

(6) Unscrew housing from the head assembly.
(7) Remove the filter element and "O" ring from filter body.
(8) Inspect inside of filter body for foreign material. Clean filter body with diesel fuel or approved solvent.
(9) Lubricate and install new "O" ring in the filter body.
(10) Position element and body under head assembly. Screw body into head assembly. Tighten to 75 ft/lbs. (100 N·m). Tighten plug assembly.
(11) Open the suction line shutoff valve.

**CAUTION**

To Avoid Machine Damage, Make Sure Suction Line Shutoff Valve Is Open Before Starting Engine.

(12) Start the engine and check filter assemblies for leaks. Repair before further operation.
(13) Check reservoir oil level and add oil as necessary.

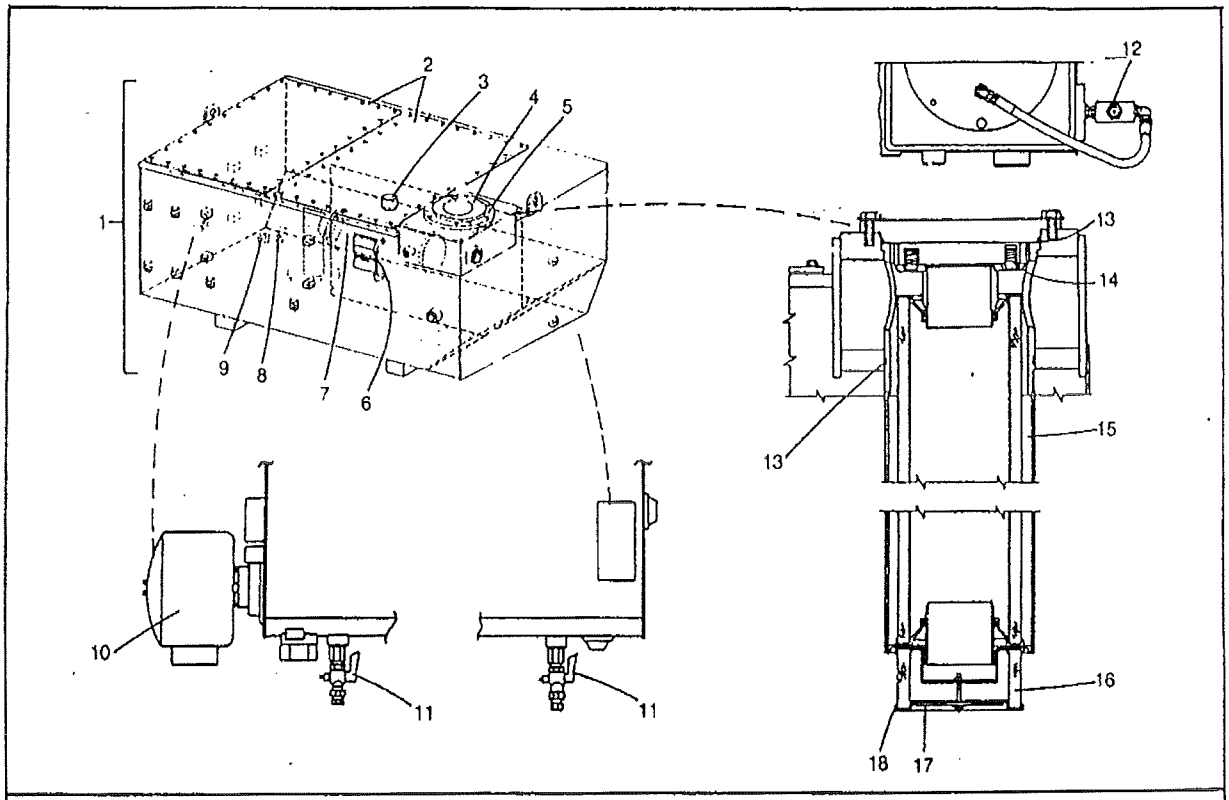


Fig. 5-13
Hydraulic Reservoir And Return Filter

FT218-A
FT220-C

(1) Hydraulic Reservoir
(2) Covers
(3) Breather And Fill Port
(4) Filter Cover
(5) Filter Housing
(6) Sight Gauge
(7) Suction Strainer
(8) Water Drain Plug
(9) Drain Plug
(10) Reservoir Heater (Optional)
(11) Drain Cock
(12) Filter Indicator
(13) "O" Ring
(14) Bypass Valve
(15) Filter Element
(16) Diffuser
(17) Washer
(18) Retaining Plate

To change the return filter, proceed as follows. See Fig. 5-13.

(1) Land all loads and shut the machine down.
(2) Remove the filter indicator hose from the filter cover.
(3) Unscrew the cover from the return filter housing and, to avoid contaminating the oil still in the filter, carefully remove the filter element by pulling straight up on the cover.
(4) Remove the dirty filter element from the cover.
(5) Replace the filter cover "O" ring. Lubricate the "O" ring before installation.
(6) Lubricate the two "O" rings in each end of the new filter element. Install the element to the filter cover. Check to ensure the element is fully seated on the filter cover.
(7) Install the filter element and cover and tighten the cover hand tight to 15 ft/lbs. (20 N·m) maximum.
(8) Reinstall the filter indicator to the filter cover.
(9) Start the engine and check for oil leaks. Repair before further operation.
(10) Check reservoir oil level and add oil as necessary.

Return Filter Diffuser: The return filter diffuser is located on the bottom of the return filter housing. The diffuser is to be cleaned and (if damaged) replaced seasonally, or when the hydraulic oil is changed. To clean the diffuser, proceed as follows:

(1) Remove the filter element as explained in return filter change procedure, instructions 1 through 5.
(2) Remove the capscrews holding the filter housing in place.
(3) Remove the filter housing.
(4) Remove the diffuser from the filter housing.
(5) Clean the diffuser, filter housing, and all related components with diesel fuel or an approved solvent.
(6) Replace the two "O" rings on the filter housing. Lubricate the "O" rings before installation to the filter housing.
(7) Reinstall the diffuser to the housing and tighten the capscrews.
(8) Reinstall the housing in the reservoir. Install and tighten all capscrews.
(9) Replace the filter element as explained in return filter change procedure.

## Hydraulic Oil Change Procedure

When the oil is changed, you must remove as much of the oil as possible before adding new oil. The hydraulic system must be drained, flushed, and refilled seasonally, or when the machine is erected at a new job site. To change the oil, proceed as follows:

(1) Cycle the machine for at least 50 minutes to stir up any foreign materials in the system.

(2) Raise the boom and any rigging high enough to clean any obstruction in a full 360° path.

(3) Visually inspect the boom hoist ratchet pawl to insure it is fully engaged.

**WARNING**

To Prevent Personal Injury, Use Caution When Draining The Oil. The Oil May Be Hot After Machine Operation.

(4) Land all loads, shut down the engine and drain the oil from the reservoir. Have enough barrels on hand to catch the drained oil. System capacity is approximately 190 gallons (719 liters).

(5) After the reservoir is drained, remove the drain plug from the bottom of the oil cooler and allow it to drain thoroughly.

(6) Remove all inspection plates from the reservoir to allow access to the tank interior.

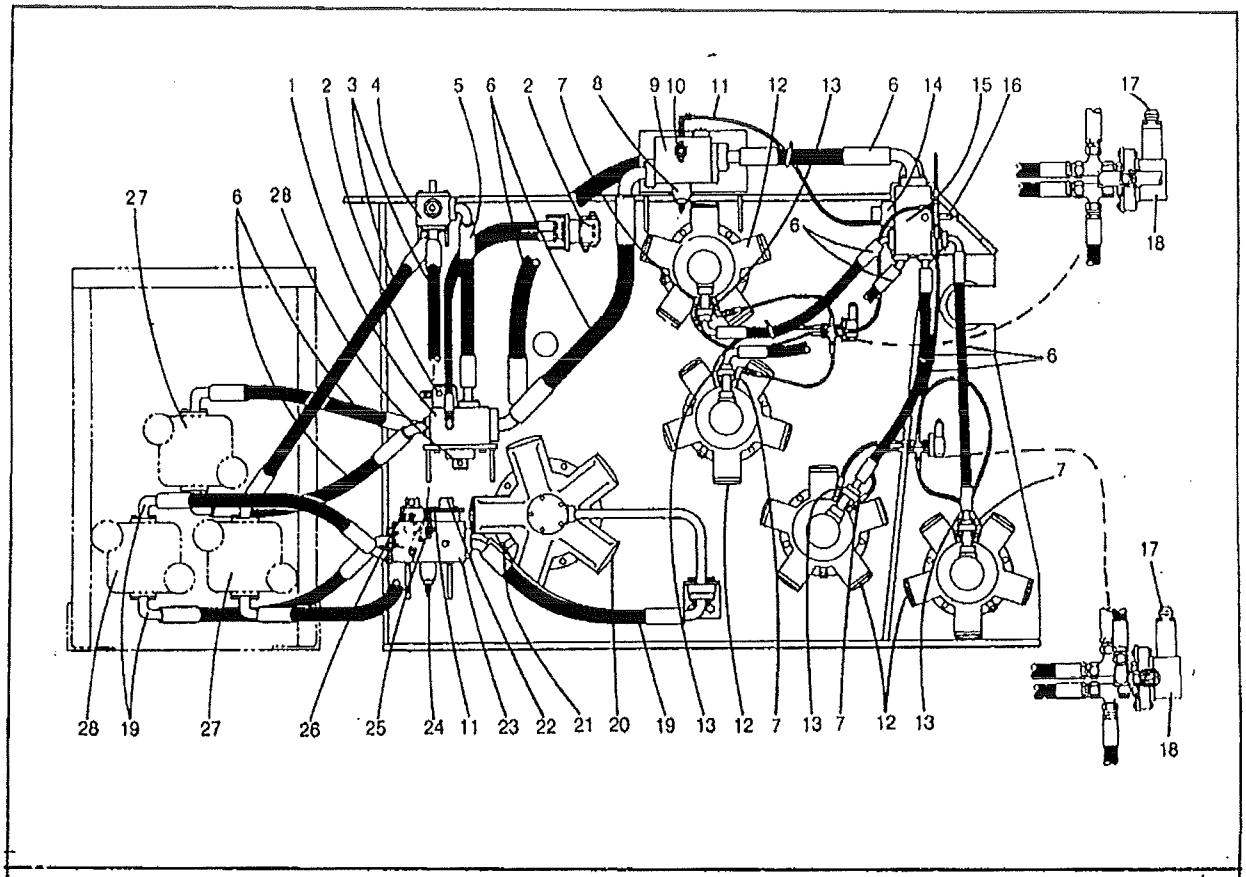


Fig. 5-14
Main Hoist And Boom Hoist Circuits

FT163-C
FT152-E

(1) M/H Valve Block
(2) Cooling Shuttle Valve
(3) A/H Power Hyd. Hoses
(4) Divertor Valve
(5) A/H Pump Divertor Hose
(6) M/H Power Hyd. Hoses
(7) Shift Control Port (Sm.Displ.)
(8) M/H Counterbalance Valve Cartridge
(9) M/H Counterbalance Valve Block
(10) Needle Valve
(11) Counterbalance Valve Pilot Lines
(12) M/H Motors
(13) Shift Control Port (Lg.Displ.)
(14) M/H Riaising Relief Valve
(15) M/H Junction Block
(16) Needle Valve
(17) Manual Override Button
(18) Variable Speed Control Valve
(19) B/H Power Hyd. Hoses
(20) B/H Motor
(21) Crankcase Relief Valve
(22) B/H Raising Relief Valve
(23) B/H Valve Block
(24) B/H Counterbalance Valve Cartridge
(25) Needle Valve
(26) B/H Lowering Relief Valve
(27) A/H Pump
(28) B/H Pump
(29) M/H Pump
(30) M/H Lowering Relief Valve

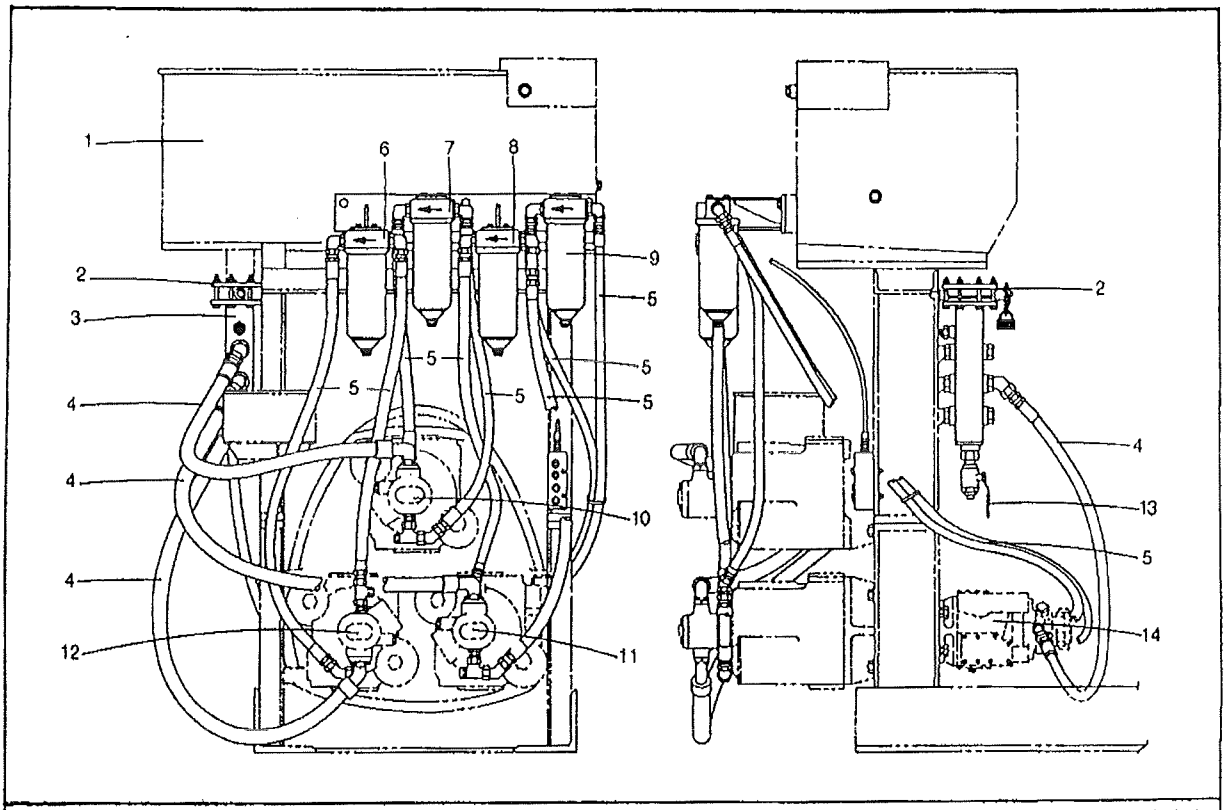


Fig. 5-15 FT676-C
Suction And Filter Lines

(1) Hydraulic Reservoir
(2) Suction Line Shutoff Valve
(3) Suction Manifold
(4) Suction Line
(5) Filter Line
(6) B/H Charge Filter
(7) M/H Charge Filter
(8) A/H Charge Filter
(9) Swing Charge Filter
(10) M/H Pump
(11) A/H Pump
(12) B/H Pump
(13) Suction Manifold Shutoff Valve
(14) Swing Pump

(7) Remove the suction line from the charge pump.
(8) Close the suction line valve. Flush the inside of the tank with kerosene or diesel fuel, preferably under pressure. Allow the flushing agent to soak in the tank long enough to clean it.
(9) Remove and replace the charge and return filters as outlined earlier in the filter change procedure.
(10) Remove the diffuser from the return filter housing. Clean or, if necessary, replace.
(11) Remove, drain and reinstall all suction and filter lines. See Fig. 5-15.
(12) Remove, drain and reinstall all power hydraulic hoses. These hoses are connected between the pumps and motors. See Figs. 5-14, 5-18, and 5-19.
(13) Drain the oil from the pump cases by removing the drain lines from each main pump. See Figs. 5-16.
(14) Reinstall drain hoses.
(15) Drain the hoist and swing motors by removing the lowermost drain plug from each motor. Reinstall the drain plugs.
(16) Drain the cleaning agent from the reservoir by opening the suction line shutoff valve. Visually inspect the interior of the sump tank through the inspection cover.
(17) Remove the suction strainer by unscrewing it from the pipe. Visually inspect the strainer for damage. Replace the strainer if necessary. See Fig. 5-13.
(18) Clean the strainer with kerosene or diesel fuel. Reinstall the strainer to the suction pipe and tighten.
(19) Replace the reservoir cover Tighten the capscrews by alternating across the cover from capscrew to capscrew, spreading the gasket in a consistent manner.
(20) Reinstall the charge pump suction line.
(21) Reassemble or install all plugs, lines and fittings.
(22) The hydraulic system is now ready to be filled with hydraulic oil. See the following procedure.

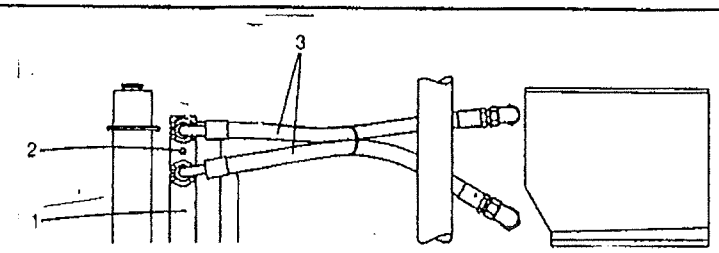


| Charge Pressure With Pump In Neutral, psi (kPa) | | | |
|---|---|---|---|
| Engine RPM | Swing Pump | B/H Pump | M/H & A/H Pump |
| 1000 | 195-225 (1345-1551) | 225-255 (1551-1758) | 210-240 (1448-1655) |
| 1800 | 210-260 (1448-1793) | 270-320 (1862-2206) | 335-385 (2310-2655) |
| Note: When pump is on stroke, charge pressure should not drop below 130 psi (896 kPa). | | | |

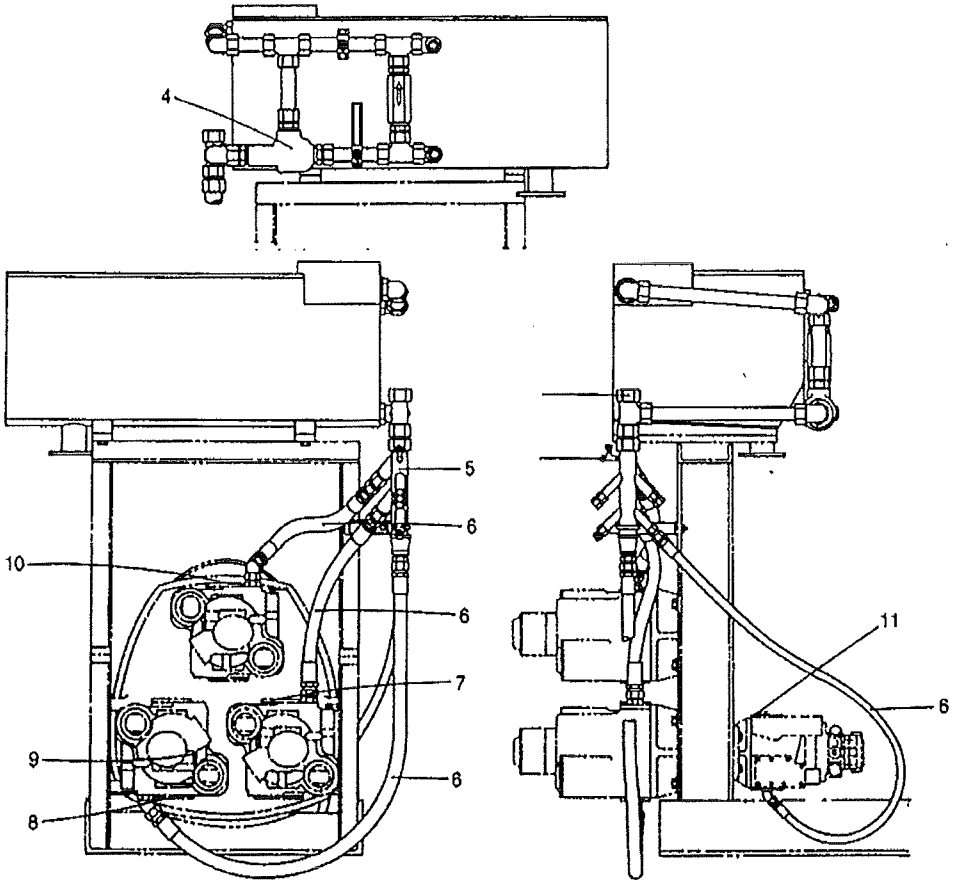


Fig. 5-16 FT665-B,FT677-C

Oil Cooler And Return Lines

(1) Oil Cooler
(2) Check/Fill Plug
(3) Oil Cooler Lines
(4) Oil Cooler Thermostatic Valve, 105°F (41°C)
(5) Return Manifold
(6) Return Lines
(7) A/H Charge Pressure Gauge Port
(8) B/H Charge Pressure Gauge Port
(9) B/H Charge Relief Valve
(10) M/H Charge Pressure Gauge Port
(11) Swing Charge Pressure Gauge Port
(12) Oil Sample Valve
(13) Return Manifold Cap

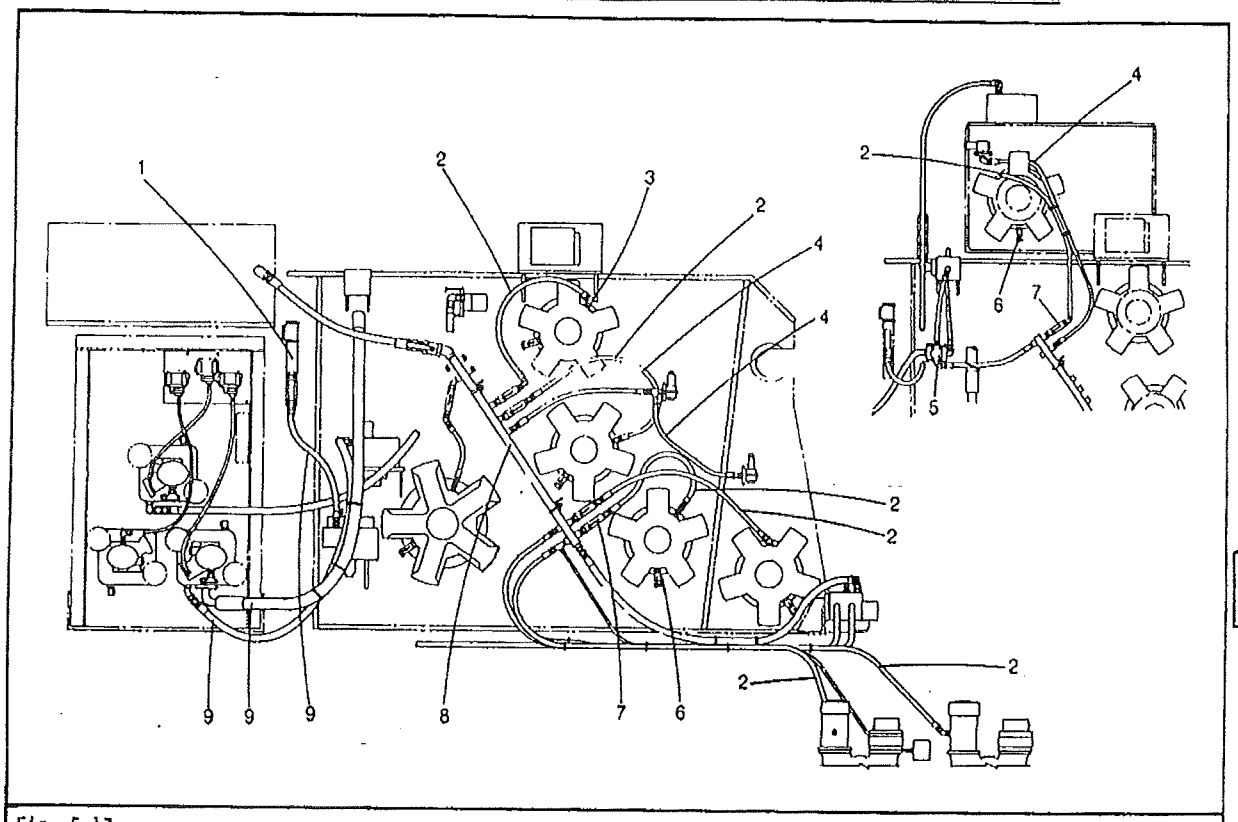


Fig. 5-17
Winch Unit Drain Lines

FT538-D,FT539-D
FT608-D

(1) Return Manifold
(2) Drain Lines
(3) Motor Case Drain Fittings
(4) Control Valve Return Lines
(5) Divertor Shift Valve
(6) Case Relief Valve
(7) In-Line Filter
(8) Drain Manifold
(9) Cooling Shuttle Return Line

5

## Hydraulic Priming Procedure

The purpose of the hydraulic priming procedure is to ensure that all of the rotating components in the system have proper lubrication during start-up. Failure to do this will cause premature failure of the components. It is also important to bleed as much air as possible out of the system to prevent erratic operation during run-in

**CAUTION**

Use Only FMC Hydraulic Oil. (See Hydraulic Oil Specifications On Page 5-24 Of This Manual.) Warranty Is Void If Incorrect Oil Is Used. Incorrect Oil May Result In Damage To Hydraulic Components. Any Substitute Oil Must Meet FMC Approval.

The following procedure must be used when refilling the hydraulic system after an oil change.

(1) The specified hydraulic oil must be prefiltered to meet FMC Standard P00800005 before being added to the hydraulic system.
(2) Remove the relief valve (plug, spring, and poppet) from the boom hoist charge pump (#9 in Fig. 5-16). Use care as the retaining plug may contain adjustable shims. Also remove the uppermost case drain plug from the swing pump (#11 in Fig. 5-16).
(3) Remove the cap from the tee fitting located on the reservoir end of the return manifold (#13 in Fig. 5-16.) Use this port to fill the four pump cases with the specified hydraulic oil. During filling, watch the open ports on the boom hoist and swing pumps and once oil appears at the open ports, replace the fittings. Completely fill the return manifold before replacing the cap.
(4) Lock the suction line shutoff valve (#2 in Fig. 5-15) in the open position. Remove the breather/fill cap (#3 in Fig. 5-13) and fill the hydraulic reservoir with the specified hydraulic oil until the oil level reaches the top of the sight level gauge (#6 in Fig. 5-13).
(5) Remove the upper most pressure check plug (#2 in Fig. 5-16) on the hydraulic oil cooler (#1 in Fig. 5-16) and completely fill the oil cooler. Reinstall the plug and tighten.

(6) Remove the upper most case drain fittings (#3 in Fig. 5-14) from the main hoist, boom hoist and swing motors. Oil from the reservoir will fill these motor cases since they are below oil level. A funnel with a flexible hose will be required to fill the auxiliary hoist motor case.

(7) Oil from the hydraulic reservoir will also fill the suction lines (#4 in Fig. 5-15) to the circuit pump charge pumps. Loosen the split flange fittings at the inlet to each charge pump and allow any entrapped air to excape. Retighten the fittings.

(8) While performing the following steps, periodically check the system for leaks and repair as necessary. Also, periodically check the oil level in the hydraulic reservoir and add oil as required to keep it the proper level.

(9) Disconnect the pneumatic actuators from the control linkage to each circuit hydraulic pump and close the fuel supply line to the diesel engine before proceeding to step (10). Shift the main/auxiliary hoist selector valve in the operator's cab to the auxiliary hoist position.

(10) Prepare to observe charge pump pressure during step (11) by installing 0-6000 psi (0-4137 kPa) pressure gauges in the charging system of each pump. See Fig. 5-16. Remove the "O" ring boss plugs from the charge pressure gauge ports in the boom hoist pump, auxiliary hoist pump and swing pump and install the gauges in these ports. On the main hoist pump, install the gauge on the tee fitting located in the charge pressure gauge port.

(11) Turn the engine over by jogging the starter until the charge pressure at each pump reaches a minimum of 30 psi (207 kPa).

(12) Open the fuel supply line, start the engine and run at low idle (approximately 750 RPM) for fifteen minutes.

**CAUTION**

If At Anytime During Initial Run-In, The Charge Pressure In The Pump Falls Below 120 psi (825 kPa), Shut Down The Engine And Determine The Cause And Take Corrective Action.

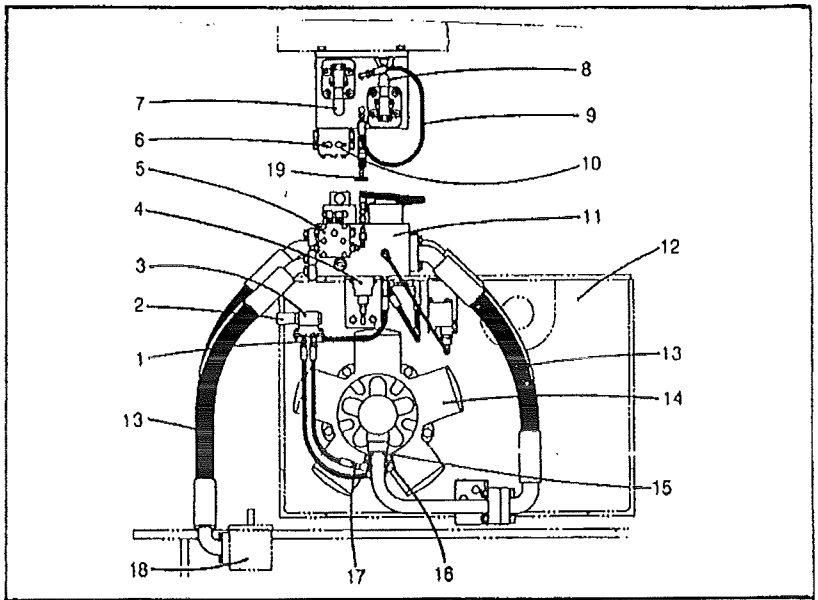


Fig. 5-18 FT204-C
Auxiliary Hoist Circuit
(1) Needle Valve
(2) Manual Override Button
(3) Variable Speed Control Valve
(4) Counterbalance Valve Cartridge
(5) Cooling Shuttle Valve
(6) Gauge Port (Lowering)
(7) A/H Lowering Relief Valve
(8) A/H Raising Relief Valve
(9) Counterbalance Valve Pilot Line
(10) Gauge Port (Raising)
(11) A/H Counterbalance Valve Block
(12) Auxiliary Winch Unit
(13) Power Hydraulic Hose
(14) A/H Motor
(15) Crankcase Relief Valve
(16) Shift Control Port (Lg. Displ.)
(17) Shift Control Port (Sm. Displ.)
(18) Divertor Valve
(19) Needle Valve

(13) With the engine running at low idle, crack open the needle valves (#10 and 25 and 19) in the counterbalance valve ports on the main hoist (#9 in Fig. 5-14), boom hoist (#22 in Fig. 5-14) and auxiliary hoist (#11 in Fig. 5-18) junction blocks.

(14) With the engine running at low idle and the main/auxiliary hoist selector valve in the auxiliary hoist position, loosen the fittings on the main hoist and auxiliary hoist load gauges located in the operator's cab. Once all the air is discharged from the lines, retighten the fittings.

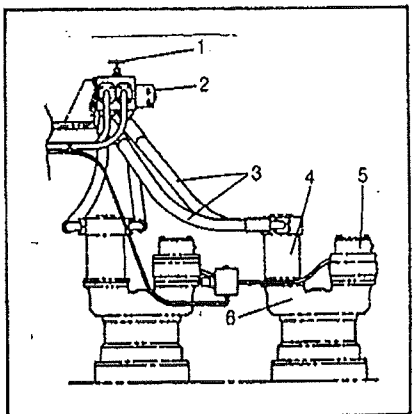


Fig. 5-19 FT858-C
Swing Circuit
(1) Free Swing Valve
(2) Swing Junction Block
(3) Power Hydraulic Hoses
(4) Hydraulic Motor
(5) Manual Override Brake
(6) Swing Planetary With Pinion

Valve Adjustments

After the hydraulic system has been primed, it is recommended that the following valves be checked for proper adjustment.

(1) Adjust the auxiliary hoist emergency load lowering pressure regulator (#1 in Fig. 5-20) located on the brake side of the main hoist winch. Turn the adjusting screw all the way in and lock the locknut.

(2) Adjust the main hoist emergency load lowering pressure regulator (#2 in Fig. 5-20) located on the brake side of the winch. Turn the adjusting screw all the way in and lock the locknut.

(3) The main air pressure regulator (#3 in Fig. 5-20) is located below the air tank on the hydraulic reservoir. With the engine running at low idle, adjust the regulator by backing off the locknut and turning in on the actuator until the regulator gauge indicates 100 psi (690 kPa). Once the regulator is set, re-tighten the locknut.

(4) Fill the pneumatic lubricator (#4 in Fig. 5-20) located just to the right of the main air pressure regulator with 10W motor oil. Adjust the lubricator by turning the adjustment screw (small recessed screw located on top of the lubricator) all the way in and then backing it out 1-1/2 turns.

(5) With the engine running at low idle, adjust the main hoist needle valves (#12 in Fig. 5-20) and auxiliary hoist needle valve (#5 in Fig. 5-20). These valves are located in the pressure lines leading to the circuit two speed control valves. Open the needle valves 3 turns from the completely closed position, then tighten the locknut.

(6) Make sure the free swing valve (#13 in Fig. 5-20) and the swing brakes (#14 in Fig. 5-20) are in the normal operating positions.

(7) To adjust the deceleration air pressure regulators located in the pneumatic manifold, it will be necessary to activate control levers in the operator's cab.

**WARNING**

To Avoid Accident, Make Sure The Pump Actuators Are Completely Clear Of The Pump Control Linkage Before Moving The Control Levers.

With the engine running at low idle, adjust the main hoist regulator (#7 in Fig. 5-20) by moving the control lever in the operator's cab to the full up position. With the lever held in that position, turn in on the adjustor on top the regulator until a pressure gauge reading of 30 psi (207 kPa) is obtained. Once the regulator is set, return the control lever to neutral. Adjust the boom hoist control regulator (#8 in Fig. 5-20) by moving the boom hoist control lever in the operator's cab to the full up position. With the lever held in that position, turn in on the adjustor located on top the regulator until a pressure gauge (#10 in Fig. 5-20) reading of 30 psi (207 kPa) is obtained. Once the regulator is set, return the control lever to neutral.

(8) The FMC Service Department does not recommend field adjustment on the main, boom or auxiliary hoist counterbalance valves (#8 and 24 in Fig. 5-14, #4 in Fig. 5-18). If you suspect a counterbalance valve is out of adjustment or defective, contact the FMC Service Department for information on repairing or replacing this valve. Difficulty with lowering might indicate a problem with a counterbalance valve.

Controls Correction And Verification

After the hydraulic system has been primed and the valves checked for proper adjustment, it is recommended that the controls be checked out for proper operation.

(1) Shut down the engine and reconnect the pneumatic actuators to the control linkages on the hydraulic pumps.

**WARNING**

During The Remaining Steps, Be Alert For Sudden Machine Motion Due To Incorrect Plumbing Or A Control Malfunction. If A Problem Develops, Shut Down Immediately And Determine The Cause.

(2) Start the engine and increase the engine speed to between 1500 and 1800 RPM with the main/aux. hoist selector valve in the auxiliary hoist position. Alternately feather the auxiliary hoist control lever to either side of neutral to determine if the system is functioning properly. Continue to cycle control for approximately five minutes. Repeat this operation for the main hoist, boom hoist, and swing functions. The swing brake must be released before cycling the swing system.

(3) Move the manual selector switch in the operator's cab to the main hoist position and observe the following functions:

(a) Moving the main hoist control lever in the operator's cab should release the main hoist brakes and stroke the actuators on both the main and auxiliary hoist pumps.

(b) The auxiliary hoist control should be dead in that it neither releases the auxiliary hoist brake nor strokes the actuator.

(c) Check the interlock system for air leaks by moving the main hoist control lever to the up position and hold it there while moving the manual selector switch to the auxiliary hoist position. Continue holding the main hoist control lever in the up position and observe the auxiliary hoist pump actuator, which should remain in the extended position for a minimum of two minutes. If it does not, the interlock system has an air leak which must be corrected.

(4) Check the operation of the auxiliary hoist variable speed circuit by removing the rubber cap from the variable speed valve (#6 in Fig. 5-20) and observing the manual override button for spool movement. Hold the auxiliary hoist

5

control lever in the up position and shift the auxiliary hoist speed selector switch in the high speed position. This should activate the solenoid valve. To determine if the solenoid valve has shifted, push down on the manual override button. If it stays down, the valve has shifted.

(5) Repeat the above procedure for the main hoist circuit.

(6) Once it has been determined that the controls are functioning properly, the various limits can be tested. See Section 12, Crane Overload Warning System, in this manual for directions on testing the crane overload warning system. See Section 8, Attachment, in this manual for directions for setting the pneumatic boom up limit switch, the main hoist limit switch, and the mercury boom hoist limit switch.

(7) Shut down the engine, remove all of the gauges and replace and tighten all plugs and fittings. Check the oil level in the reservoir and add the specified hydraulic oil as required to obtain the proper level.

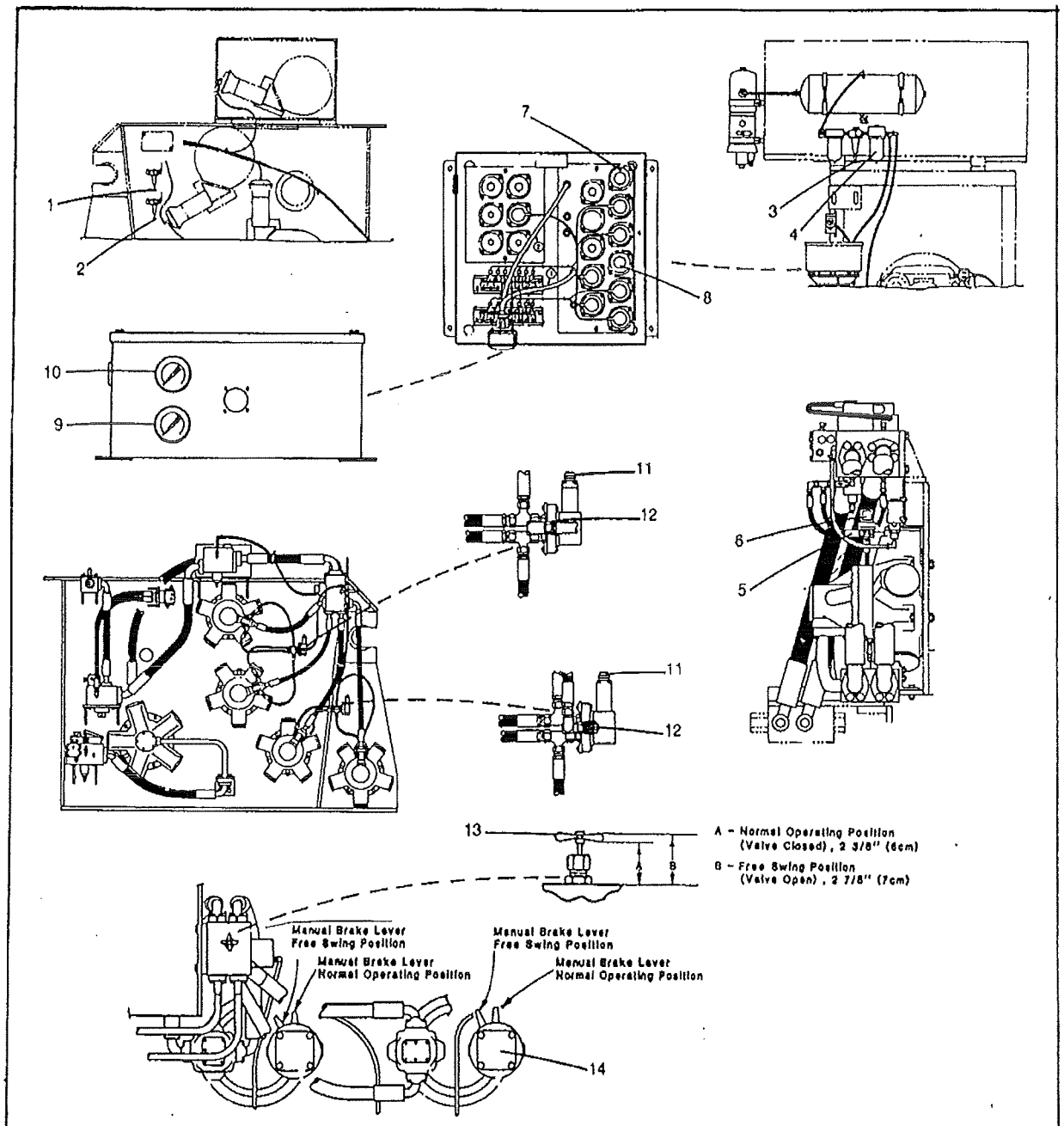


Fig. 5-20
Valve Adjustments

(1) A/H Emergency Lowering Pressure Regulator
(2) M/H Emergency Lowering Pressure Regulator
(3) Main Air Pressure Regulator
(4) Pneumatic Lubricator
(5) A/H Needle Valve
(6) A/H Directional Control Valve
(7) M/H Up Deceleration Pressure Regulator
(8) B/H Up Deceleration Pressure Regulator
(9) M/H Deceleration Pressure Gauge
(10) B/H Deceleration Pressure Gauge
(11) M/H Directional Control Valve
(12) M/H Needle Valve
(13) Free Swing Valve
(14) Swing Brake

## Hydraulic Pressure Setting

The following instructions pertain to setting the hydraulic system relief valve pressures on Tower/Gantry cranes, including the ABS/API models. Hydraulic pressure settings for Link-Belt (R) machines have been determined by the Engineering Department and are the maximum allowable pressures for efficient machine operation. Increasing the settings above those specified will not make the machine operate any faster or better and may result in failure of the hydraulic system. All machines are tested and properly adjusted before leaving the factory and should not need checking when first put into service.

After the first 500 hours of operation and every 1000 hours thereafter, the pressure should be checked. A drop in pressure settings may be noticed when making the first check. This is normal and is probably caused by lessening of spring tension or stress relief in the valve parts. See Chart A for relief valve settings.

Chart A
Relief Valve Settings

| Circuit | Pressure Setting, psi (kPa) |
|---|---|
| Main Hoist, 58,000 Lbs. (26,309 kg) Line Pull Winch | 3600 + 50 (24,822 + 345) |
| Main Hoist, 37,000 Lbs. (16,783 kg.) Line Pull Winch | 3000 + 50 (20,685 + 345) |
| Boom Hoist (TG1500-1900, ABS/API 1500-1700) | 3500 + 50 (24,133 + 345) |
| (TG-2300B) | 3900 + 50 (26,891 + 345) |
| Auxiliary Hoist | 3000 + 50 (20,685 + 345) |
| Swing (TG1500-1900,ABS/API 1500-1700) | 4000 + 200 (27,580 + 1379) |
| Swing POR | 3500 + 200 (24,133 + 1379) |
| Swing (TG-2300B) | 3500 + 200 (24,133 + 1379) |
| Swing POR | 3000 + 200 (20,685 + 1379) |

**WARNING**

During Machine Operation, Hydraulic Oil Becomes Hot Enough To Cause Serious Burns. Therefore, When Working On The Machine Be Extremely Careful Not To Come In Contact With Hot Oil, Lines, Or Components.

When adjusting pressure settings, observe the following:

(1) Use a pressure gauge calibrated to 0-6000 psi (41,370 kPa) with a snubber or shut-off valve.

**WARNING**

To Avoid Personal Injury Or Machine Damage, Never Exceed 4250 psi (29,304 kPa) When Setting Pressure

(2) Set all pressures with the engine running at least 1200 rpm to prevent stalling the engine.

(3) Obtain each final pressure setting by bringing pressure up to setting, not down. This is accomplished by turning the relief valve adjusting screw, located under the removable cap, in or clockwise. If the pressure setting is too high, back the adjusting screw out and readjust.

(4) Do not operate the machine over relief for more than five seconds at a time, with a five minute cool-off period between cycles.

(5) After the proper setting is reached, lock the adjusting screw and recheck the pressure setting for accuracy.

Note: The outside locknut on the adjustment screw is locked in place with setscrews and must not be moved. Its purpose is to prevent adjusting the valves to a pressure setting higher than the rated pressure of the valve itself.

**WARNING**

You Are Working With Extremely High Pressure. To Avoid Personal Injury When Setting Pressure Or Replacing Hoses, Be Sure The Hoses Are Capable Of Withstanding The Pressure.

### Procedure For Setting Relief Pressure In Main Hoist Circuit:

(1) With the engine running, release the main hoist brakes by moving the control lever in the operator's cab to the brake released position. On each main hoist brake, turn the brake adjusting nut (#2 in Fig. 5-21) located at the brake band dead-end in several turns to ensure that the brakes will hold full torque in both directions. Count the number of turns that the nut is tightened so that it can be returned to its original position after the pressures are set. Shut the engine off and disconnect the electrical line (#1 in Fig. 5-21) going to the emergency solenoid exhaust valves to apply all drum brakes while setting relief pressures. Install 0-6000 psi (41,370 kPa) in the M/H circuit test ports at the quick disconnect (Items 9 and 10 in 5-21) on the cooling shuttle valve block (#8 in Fig. 5-21). Start the engine.

(2) To adjust the main hoist raising relief valve (#11 in Fig. 5-21) on the main hoist junction block located closest to the motors, place the manual selector valve switch in the operator's cab in the auxiliary hoist position. Manually shift both of the variable speed control valve spools by pressing down on the rubber boot (#13 in Fig. 5-21) which covers the manual override button. With the spools shifted, stroke the main hoist control lever in the operator's cab to the up position and adjust the raising relief valve

until the correct circuit pressure is indicated at the raising gauge part (#10 in Fig. 5-21).

Note: Three men are required for this procedure.

(3) To adjust the lowering relief valve (#7 in Fig. 5-21) located on the main hoist junction block closest to the pumps, leave the selector valve in the auxiliary hoist position. Stroke the main hoist control lever in the down position and adjust the lowering relief valve until the correct circuit pressure is indicated at the lowering gauge port (#9 in Fig. 5-21).

(4) Return the main hoist brake adjusting nuts to their original position. Remove all gauges and install test port quick disconnect dust covers.

Procedure For Setting Relief Pressures In Boom Hoist Circuit:

(1) To hold the motor torque in the up direction, it will be necessary to tighten down the brake band adjusting nut (#2 in Fig. 5-21). Count the number of turns that the nut is tightened so that it can be returned to its original position after the pressures are set.

(2) Shut down the engine. Install 0-6000 psi (41,270 kPa) pressure gauges in the boom hoist circuit test ports at the quick disconnects (Items 5 and 6 in Fig. 5-21) on the cooling shuttle valve located on the boom hoist junction block. Start the engine.

(3) Adjust the front (raising) relief valve (#4 in Fig. 5-21) relief valve by stroking the boom hoist control lever in the operator's cab to the up position. Turn the relief valve adjusting screw until the correct circuit pressure is indicated at the raising gauge port (#5 in Fig. 5-21).

(4) To adjust the rear (lowering) relief valve (#3 in Fig. 5-21), stroke the boom hoist control lever to the down position. Turn the adjusting screw until the correct circuit pressure is indicated at the lowering gauge port (#6 in Fig. 5-21).

(5) Return the boom hoist brake adjusting nut to its original position. Remove all gauges and install test port quick disconnect dust covers.

5

| Circuit | Pressure Setting, psi (kPa) |
|---|---|
| Main Hoist, 58,000 Lbs. (26,309 kg) Line Pull Winch | 3600 + 50 (24,822 + 345) |
| Main Hoist, 37,000 Lbs. (16,783 kg) Line Pull Winch | 3000 + 50 (20,685 + 345) |
| Boom Hoist (TG1500-1900, ABS/API 1500-1700) | 3500 + 50 (24,133 + 345) |
| Boom Hoist (TG23008) | 3900 + 50 (26,891 + 345) |

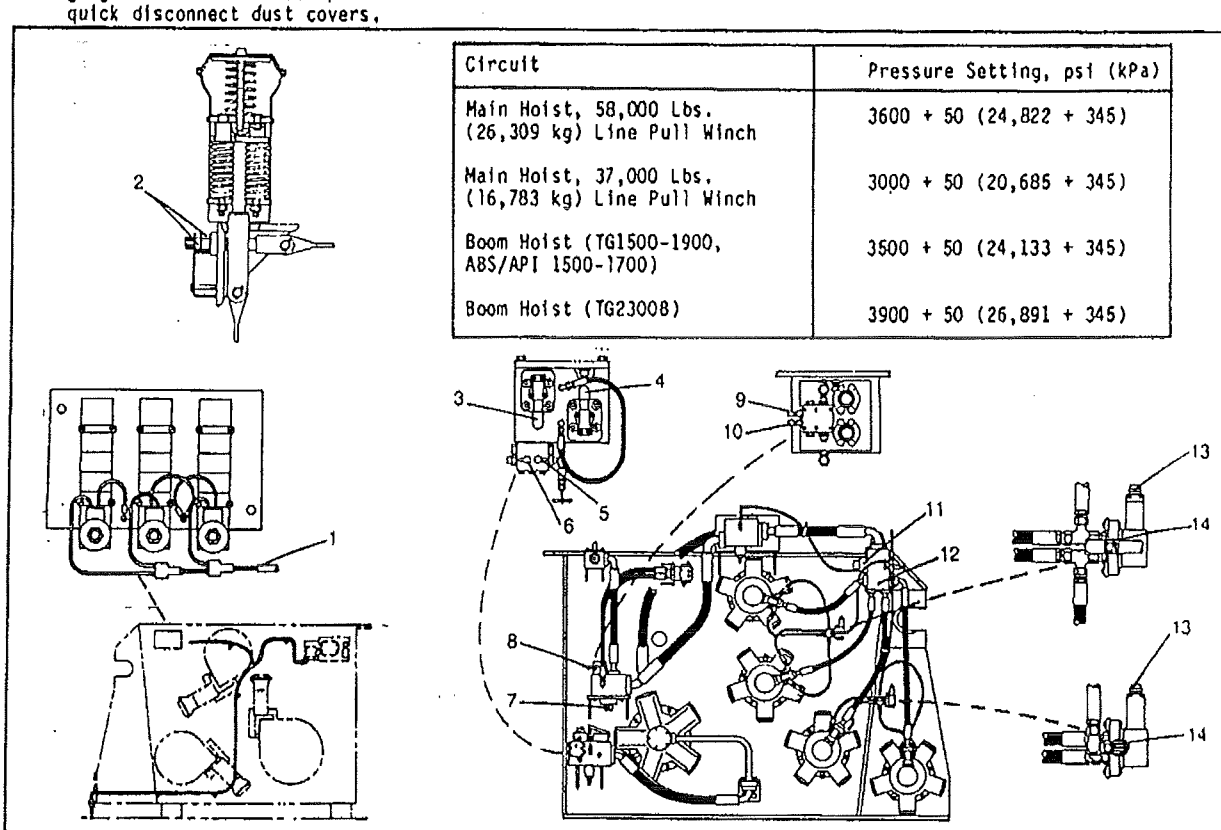


Fig. 5-21
Main and Boom Hoist Circuit Relief Pressures

(1) Emergency Solenoid Electrical Line
(2) Adjusting Nut and Locknut
(3) B/H Lowering Relief Valve
(4) B/H Raising Relief Valve
(5) Gauge Port (Raising)
(6) Gauge Port (Lowering)
(7) M/H Lowering Relief Valve
(8) Cooling Shuttle Valve
(9) Gauge Port (Lowering)
(10) Gauge Port (Raising)
(11) M/H Raising Relief Valve
(12) M/H Junction Block
(13) Manual Override Button
(14) Needle Valve

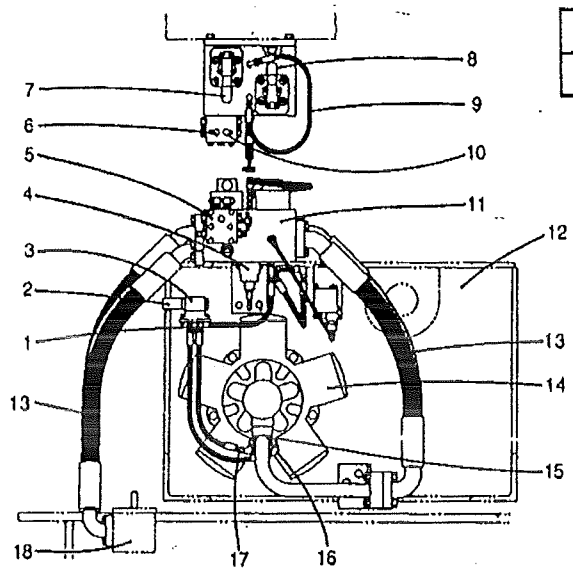


| Circuit | Pressure Setting, psi (kPa) |
|---|---|
| Auxiliary Hoist | 3000 + 50 (20,685 + 345) |

Fig. 5-22
Auxiliary Hoist Circuit Relief Pressure

FT204-C

(1) Needle Valve
(2) Manual Override Button
(3) Variable Speed Control Valve
(4) Counterbalance Valve Cartridge
(5) Cooling Shuttle Valve
(6) Gauge Port (Lowering)
(7) A/H Lowering Relief Valve
(8) A/H Raising Relief Valve
(9) Counterbalance Valve Pilot Line
(10) Gauge Port (Raising)
(11) A/H Valve Block
(12) Auxiliary Winch Unit
(13) Power Hydraulic Hoses
(14) A/H Motor
(15) Crankcase Relief Valve
(16) Shift Control Port (Lg. Displ.)
(17) Shift Control Port (Sm. Displ.)
(18) Divertor Valve

Procedure For Setting Relief Pressure In Auxiliary Hoist Circuit:

(1) With the engine shut down, install 0-6000 psi (41,370 kPa) gauges in the auxiliary hoist circuit test ports at the quick disconnects (Items 6 and 10 in Fig. 5-22). The auxiliary hoist brakes will hold full motor torque without adjustment. To set the brakes for pressure setting purposes, make sure the electrical line going to the emergency solenoid exhaust valve is disconnected as described in the main hoist pressure setting procedure and Fig. 5-20. Start the engine.

(2) With the manual selector switch in the operator's cab in the auxiliary hoist position, adjust the raising relief valve (#8 in Fig. 5-22) located on the front of the top side of the auxiliary hoist junction block. Manually shift the two speed control valve spool by pressing down on the rubber boot that covers the manual override button (#2 in Fig. 5-22). With the spool shifted, stroke the auxiliary hoist control lever in the operator's cab to the up position and turn the adjusting screw until the correct circuit pressure is reached at the raising gauge port (#10 in Fig. 5-22).

(3) To adjust the lowering relief valve (#7 in Fig. 5-22) located on the back of the topside of the auxiliary hoist junction block, stroke the auxiliary hoist control lever to the down position and turn the adjusting screw until the correct circuit pressure is indicated at the lowering gauge port (#6 in Fig. 5-22)

(4) Remove all gauges and replace the test port quick disconnect dust covers.

Charge Pressure Switch Circuit

The air controls switch in the operator's cab must be turned to the On position to energize the pneumatic controls.

Note: The air controls indicator light will come on when the air controls switch is in the On position.

With the switch In the Off position, the pneumatic suppy air is exhausted from the pneumatic controls, which allows all hydraulic pumps to return to the neutral position and applies all brakes.

Note: The supply air pressure will also be exhausted if the charge pressure drops below minimum operating pressure (100 to 110 psi, 686 to 758 kPa), indicated by the red charge pressure light being lit.

The air pressure gauge indicates the air pressure in the control circuit. The gauge should register between 90 to 100 psi (621 to 686 kPa).

The main air solenoid valve shuts down all pneumatic control functions and applies all hoist brakes by exhausting supply air pressure from the control circuit. The main air solenoid valve will de-energize if the ignition switch or the air controls switch on the operator's cab console are turned to the Off position, or if the boost pressure on the circuit charge pumps fall below 100 psi (690 kPa).

Checking Charge Pressure Switches To Determine Charge Pressure Loss

The charge pressure switches (Fig. 5-30) monitor charge pressure in the main hoist, auxiliary hoist, and boom hoist circuits. These switches are wired in series so that if any one of the hydraulic circuits loses charge pressure, the main air solenoid is de-energized, shutting down all pneumatic control functions and applying all hoist brakes.

When charge pressure in all of the three circuits is above 100 to 110 psi (686 to 758 kPa), the three pressures are shifted so that the main air switch in the operator's cab has 24 volts hot potential at one side of the switch. This allows 24 volts positive to the main pneumatic control solenoid, if the main air switch is in the On position. The green control light will also be on, indicating adequate charge pressure.

If loss of charge pressure occurs in either the main, auxiliary or boom hoist circuit, the pressure switches are are switched so that the cab main air switch is dead. Air is dumped from from the pneumatic control circuit, shutting down all pneumatic control functions and applying all hoist brakes. The red charge pressure light on the control panel will also come on, indicating lack of charge pressure in one of the circuits.

If the air is dumped from the pneumatic circuit while the engine is running, there is a good possibility that one of the hydraulic circuits has lost charge pressure. Use a test light (or voltmeter) as described below to determine which circuit is affected.

Note: Checking the charge pressure switches with a test light is a quicker and cleaner process than plumbing into a hydraulic pump with a test gauge. It is recommended that you check the switches first and then, if necessary, check the pumps.

(1) First check the main hoist circuit. See Fig. 5-30. If this circuit is okay, the main hoist pressure switch will indicate a voltage (be hot) from the common (C) terminal (wire 36) to the normally open (NO) terminal (wire 112). Check both terminals with a test light and see if they are hot. If the common (C) terminal does not indicate a voltage, check wire 36 back to the fuse box and inspect fuse 8.

If the main hoist charge pressure is low, the pressure switch will have switched from the common (C) terminal (wire 36) to the normally closed (NC) terminal (wire 105).

If both the common and normally open terminals indicate voltage, the charge pressure loss is not in the main hoist circuit.

(2) Next test the auxiliary hoist circuit. If this circuit is okay, the auxiliary hoist pressure switch will indicate a voltage (be hot) from the common (C) terminal (wire 112) to the normally open (NO) terminal (wire 113). Check both terminals with a test light. If both the common and normally open terminals are hot, go on to the boom hoist pressure switch.

If the auxiliary hoist charge pressure is low, the switch will have switched from the common (C) terminal (wire 112) to the normally closed (NC) terminal (wires 105 and 114). If only the normally closed terminal is hot, go to the auxiliary hoist pump and check charge pressure. Correct charge pressures are shown in Chart B.

(3) If the auxiliary hoist pump circuit shows charge pressure, next test the boom hoist circuit. If this circuit is okay, the boom hoist pressure switch will switch from the common (C) terminal (wire 113) to the normally open (NO) terminal (wire 109). Check each terminal with a test light. If both are hot, the problem is not charge pressure loss. See later in this section for alternate suggestions.

Chart B

| Engine RPM | 1000 | 1800 |
|---|---|---|
| Main And Auxiliary Hoist | 210-240 psi (1448-1655 kPa) | 335-385 psi (2310-2655 kPa) |
| Boom Hoist | 225-255 psi (1551-1758 kPa) | 270-320 psi (1862-2206 kPa) |

Procedure For Setting Relief Pressures In Swing Circuit TG2300B):

(1) The swing brakes are capable of holding full motor torque. Switch to high speed and apply swing brakes. The free swing valve, which is located on the top side of the swing manifold block, must be in the normal operating position (#1 in Fig. 5-24).
(2) The pressure gauge ports for the swing circuit are located on the left side of the cooling shuttle block when facing the rear of the machine. The top port (#3 in Fig. 5-24) is swing right pressure.
(3) To read the swing left pressure, install the pressure gauge in the quick disconnect coupling in the bottom gauge port, and read the pressure with the left pedal full depressed. Record the pressure reading.
(4) To read the swing right pressure, install the pressure gauge in the quick disconnect coupling in the bottom gauge port, and read the pressure with the right pedal fully depressed. Record the pressure reading.
(5) If either crossover relief setting is not within the specified value, it will be necessary to change the shim stack between the cap and spring of the relief valve. The relief valve located on the top side of the cooling shuttle block is the swing right crossover. The relief valve located on the bottom side of the cooling shuttle block is the swing left crossover. Add shims to increase setting, remove shims to lower setting.

Shims to use are:

| Thickness Inches (mm) | Change psi (kPa) |
|---|---|
| .002 (.0508) | 100 ( 690) |
| .010 (.254) | 500 (3448) |

After changing shims, retighten cap. Cap must be tight for correct operation. Torque to 30 ft/lbs (40.08 N m). Once the correct pressure settings are obtained, remove all gauges and replace quick disconnect dust covers.

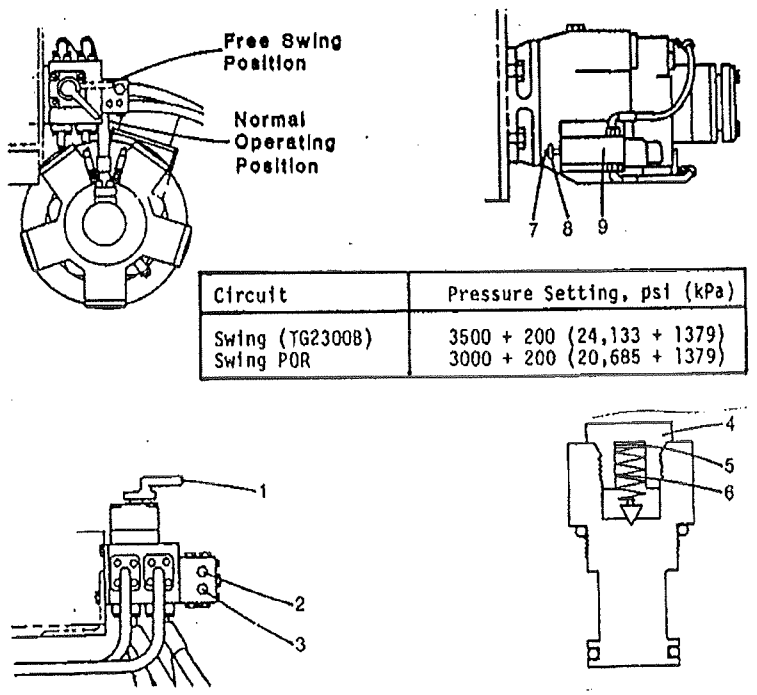


| Circuit | Pressure Setting, psi (kPa) |
|---|---|
| Swing (TG2300B) | 3500 + 200 (24,133 + 1379) |
| Swing POR | 3000 + 200 (20,685 + 1379) |

Fig. 5-24 FT529-0
Swing Relief Pressure-TG2300B
(1) Free Swing Valve
(2) Swing Left Gauge Port
(3) Swing Right Gauge Port
(4) Cap
(5) Shims
(6) Spring
(7) Adjusting Screw
(8) Locknut
(9) POR Valve

.Procedure For Setting Pressure Override (POR) Valve

(1) Install the pressure gauge in either system pressure port (items 2 or 3 in Fig. 5-24).
(2) Stroke the pump to full system pressure.
(3) The pressure gauge should show the system pressure relief setting and then, after a two or three second delay, settle back to the POR setting. If the pressure gauge does not initially show the system pressure relief setting, raise the POR valve setting to above system pressure relief. Then recheck and adjust the relief valve as needed.
(4) To adjust the POR valve, proceed as follows:
(a) Holding the adjustment screw (#7 in Fig. 5-24) in place with a 3/16" internal hex wrench, loosen the locknut (#8), using a 9/16" wrench.
(b) Start the engine and pressurize the system. Turn the adjustment screw until the desired setting is reached. Screw in to increase pressure and out to decrease pressure.

Note: The setting will vary 1000 psi (6895 kPa) per turn of the screw.

(c) Hold the adjusting screw in place and torque the locknut to 6/10 ft/lbs (8 to 13 N m).

Charge Pump Removal

(1) Remove the line connecting the charge pump to the charge manifold. To prevent draining, plug the line.
(2) Loosen the four capscrews (see Fig. 5-31) that form a rectangular pattern on the rear of the charge pump.

Note: Do not remove the capscrews at the top and bottom of the charge pump. These capscrews hold the charge pump together.

**CAUTION**

Protect Exposed Surfaces And Ports To Prevent Damage And To Prevent Parts From Falling Into The Circuit Pump.

(3) Before removing the charge pump, mark its housing and the circuit pump end cap to ensure proper orientation during reassembly. A kit is available for charge pump replacement. See the Parts Manual page dealing with the circuit pump.
(4) The charge pump lifts straight out from the circuit pump. In the swing charge pump only, there is a spacer in the idler shaft bore that can fall out as the charge pump is removed. Be sure that the spacer does not fall into the circuit pump. The boom, auxiliary and main hoist pumps do not have spacers.

Note: Do not use sharp tools to pry the charge pump from the circuit pump. A scratch on the sealing surface can cause a leak. If the charge pump does not pull loose, tap it lightly on the side with a plastic hammer to break the paint or gasket seal.

(5) Replace the gasket between the charge pump and the end cap. Make sure the new gasket is properly installed. If positioned wrong, the gasket covers the relief valve port.
(6) The charge relief valve can be inspected by removing the hex plug, spring and poppet. Remove the shims from the counterbore of the hex plug. Do not alter these shims unless new parts are used, in which case the valve must be reshimmed to the proper setting.
(7) Using a drag link socket, remove the charge check valves from the circuit pump end cap. The check valves are cartridges and are interchangeable. Before reinstalling the valves, inspect the O-rings for damage and apply a light coat of oil. Use caution when installing these valves to prevent damage to the O-ring when the cartridge is inserted past the threads. If it is necessary to replace the check valves, it is recommended that they be replaced in pairs. Tighten the check valve to 30-40 ft/lbs (40-53 N·m) on the swing charge pump and to 125-135 ft/lbs (167-180 N·m) on the main hoist, boom hoist, and auxiliary hoist charge pumps. Be sure the valves are below the surface of the end cap.
(8) When replacing the charge pump, align the gasket so that the relief valve port is not blocked by the gasket. Rotate the charge pump shaft so that it aligns approximately with the slot in the end of the pump drive shaft. Hold the idler spacer in place and install the charge pump into the end cap. Rotate the charge pump until the tang and slot engage and the pump is solidly on the end cap. The charge pump should assemble freely with the circuit pump. Do not force the charge pump into position.
(9) Tighten the four capscrews to 10-11 ft/lbs (13-15 N·m) for the swing charge pump and to 27-37 ft/lbs (36-49 N·m) for the main hoist, boom hoist and auxiliary hoist charge pumps.

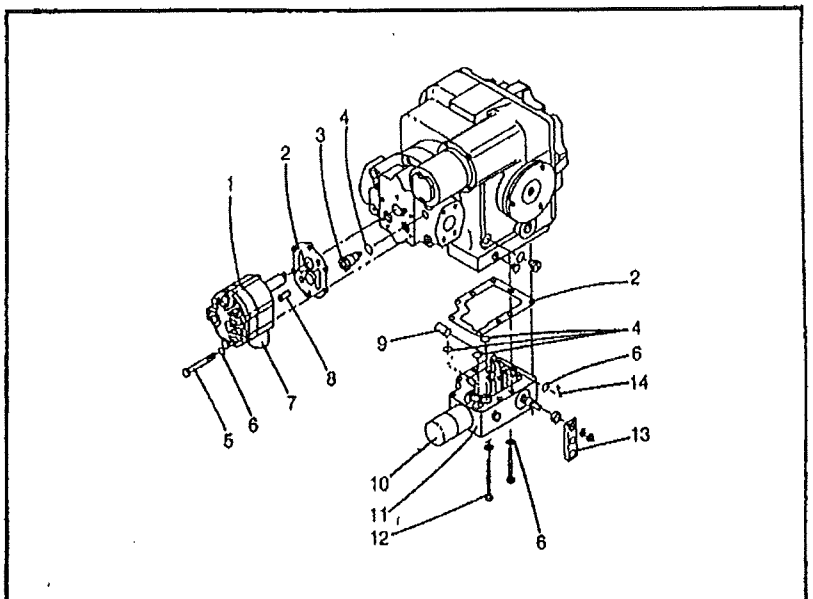


Fig. 5-31
Hydraulic Piston Pump

(1) Charge Pump
(2) Gasket
(3) Charge Check Valve
(4) O-Ring
(5) Capscrew (4 Each)
(6) Washer
(7) Charge Relief Valve
(8) Idler Spacer
(9) Control Link Pin
(10) Displacement Controls (Sealed)
(11) Control Valve
(12) Capscrew (9 Each)
(13) Control Handle
(14) Cotter Pin

If the boom hoist charge pressure is low, the pressure switch will switch from from the common (C) terminal (wire 113) to the normally closed (NC) terminal (wire 108 and 114).

If only the normally closed terminal is hot, go to the boom hoist pump and check charge pressures. Correct charge pressures are shown in Chart B.

Alternate Suggestions

If all of the hydraulic circuits have adequate charge pressure but the cab charge pressure light is on and the main air switch dead, check the following:

(1) Make sure the pressure snubbers at one or more pressure switches are not contaminated, restricting flow into the switch.
(2) Hydraulic oil viscosity wrong - using a heavy summer weight oil in cold weather. The heavy oil will not pass through snubbers. See earlier in this section of the manual for lubrication specifications.
(3) Possible problem in the electrical system or power supply.
(4) Pressure switch defective or out of adjustment. If defective, replace. Do not attempt repair. If out of adjustment, contact the FMC Service Department for adjustment information.

Displacement Control Valve Removal

All displacement control valves are factory adjusted, locked and sealed with a cap. See item #10 in Fig. 5-31. Do not disturb this adjustment.

(1) Remove the nine capscrews and swing the control valve away from the circuit pump housing as far as it will go in order to expose the control linkage. Use caution when pulling the control valve away from the pump, because the valve is sealed with O-rings and a gasket. A kit is available for control valve replacement. See the Parts Manual page dealing with the circuit pump.

**CAUTION**

Use Caution When Swinging The Control Valve Away From The Pump Housing. This Opens A Large Cavity In The Housing. During Removal And Installation Of The Control Link Pin, Parts Can Drop Into The Pump Housing, Requiring Total Disassembly Of The Unit.

(2) Remove the cotter pin, washer and control link pin. See Fig. 5-31. It is recommended that a piece of wire be inserted through the eye of the cotter pin so the pin can be easily retreived if it falls into the pump.

(3) Before reinstalling the control valve, place a new gasket on the housing, and place the O-rings in the control valve. Replace the orifice plate, if used, in its proper position.

Note: The supplied swing pump on this model machine requires an orifice plate to ensure correct pump response. The boom hoist, main hoist, and auxiliary hoist pumps do not have an orifice plate in the controller.

(4) Install the control link pin through the control linkage and the feedback link on the swashplate with the headed side toward the center of the pump. Use caution not to drop parts into the pump housing.

(5) Swing the control valve into place against the housing. Be certain that the O-rings and orifice plate, if used, are in place. Reinstall the nine capscrews.

(6) Some newer units have a one piece welded design in the displacement control link. On these units, engage the pin on the control link in the mating hole in the small link attached to the swashplate. Slide the pin all the way into the swashplate link and then swing the control valve into place against the housing as previously described in this section.

## Hydraulic Oil Sampling Procedure

(1) A petcock is provided on the machine for taking an oil sample. See Fig. 5-32. The petcock is located in the return line. The return line is a continuous circuit and represents a true condition of the oil.

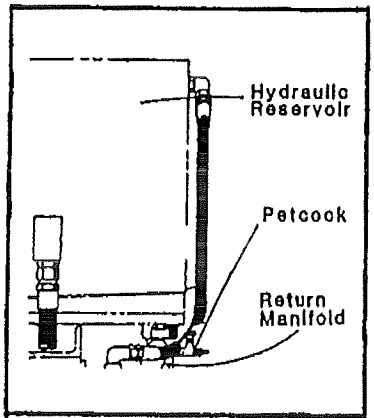


Fig. 5-32
Petcock Location

(2) Clean the area around the petcock to prevent foreign material from entering the oil sample bottle (FMC Part Number 31P0179).
(3) Run the engine at low idle. The oil should be warm (130°F to 150°F [54°C to 66°C]) before taking sample.
(4) Make sure the sample bottle is clean and dry. If solvent is evident in the sample bottle, remove the cap and allow the solvent to evaporate.
(5) Slowly open petcock to get the desired flow. When taking sample, the oil must be flowing from the petcock, not dripping.

Note: Do not change the flow rate until the sample is taken.

(6) Drain between 0.5 to 1 quart (0.5 to 1 liter) of oil into a waste container.
(7) Remove bottle cap and plastic liner, taking care not to contaminate inner surface of the plastic liner.
(8) Without changing the flow rate, collect an oil sample in a clean bottle. Fill to the 6 oz. (180ml) mark.

Note: Do not fill bottle to the top. If bottle is overfilled, the testing laboratory must empty part of the oil and this will vary the test results.

Note: Do not allow sample bottle to contact petcock. Do not disturb hydraulic lines and allow dirt to fall into the bottle.

**CAUTION**

To Avoid Contamination, Never Reuse An Oil Sample Bottle.

(9) When the 6 oz. (180ml) sample has been collected, remove the bottle from the oil flow, allowing continuing flow to drain into the waste container.
(10) Replace the cap and plastic liner. The plastic liner is used to keep small plastic particles from the cap out of the bottle.
(11) After the sample bottle has been removed from the oil flow, turn off the petcock.
(12) Fill out an oil sample card (Fig. 5-33) and attach it to the bottle (Fig. 5-34). Send the oil sample to a testing laboratory.

## Allowable Contamination Level

Figure 5-35 shows the maximum allowable contamination level for this model crane. Any count above that level means that the hydraulic oil must be replaced as described earlier in this section of the manual, or filtered using a filter buggy.

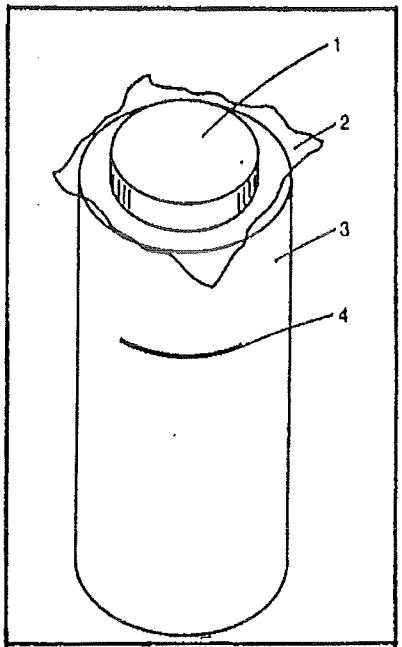


Fig. 5-34
Hydraulic Oil Sample Bottle
(1) Plastic Cap
(2) Plastic Liner
(3) Bottle
(4) Fill Mark

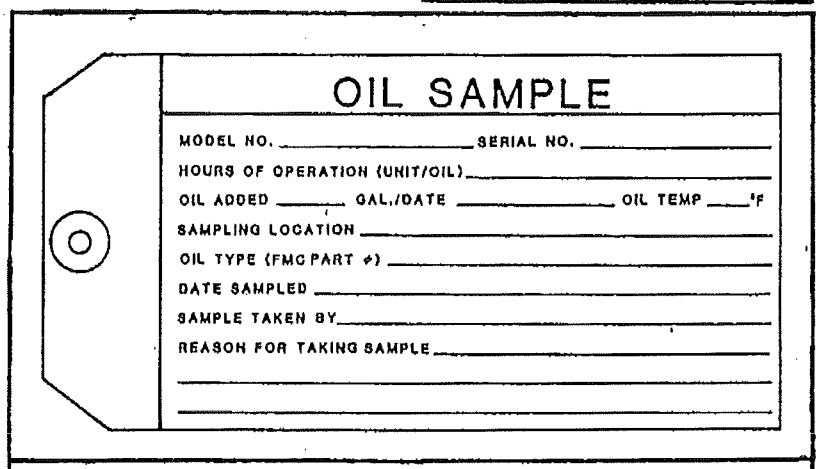

OIL SAMPLE

MODEL NO. _____ SERIAL NO. _____
HOURS OF OPERATION (UNIT/OIL) _____
OIL ADDED _____ GAL./DATE _____ OIL TEMP ____°F
SAMPLING LOCATION _____
OIL TYPE (FMC PART #) _____
DATE SAMPLED _____
SAMPLE TAKEN BY _____
REASON FOR TAKING SAMPLE _____

Fig. 5-33
Oil Sample Card

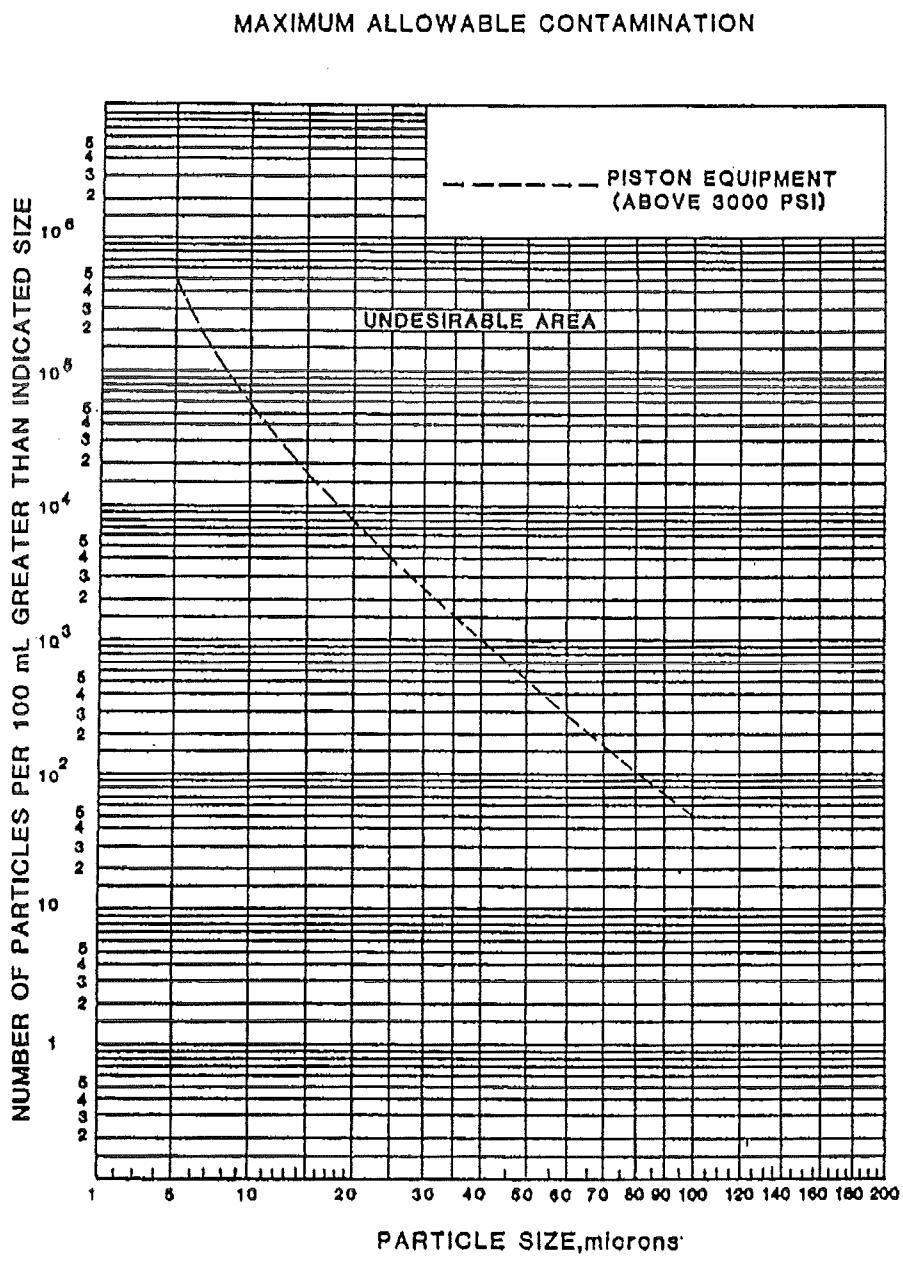


Fig. 5-35
Maximum Allowable Contamination Level

Oil Change After Component Failure

After a component failure, the oil may be contaminated with metal particles or other debris. As much of this contamination as possible must be removed from the system, as follows:

(1) Shut down engine immediately, otherwise contamination can cause other failures.
(2) Close the butterfly valve on the suction manifold.
(3) Repair or replace the failed component.
(4) Remove, disassemble and clean all hydraulic components on the circuit that failed. Disconnect, drain and flush all lines on the failed circuit.
(5) Check all filters for bypass.
  (a) If filters show bypass, contaminates passed by the filter.
  (b) If filters don't show bypass, remove filter element and inspect. If element is damaged, contaminates may have passed by.
(6) Replace all filter elements as explained in the filter change procedures described earlier in this section of the manual.
(7) If the oil has been changed recently, drain it into clean barrels.

Note: System capacity is approximately 190 gallons (719 liters).

Filter oil with a self contained power filtration unit and reuse. Otherwise, change oil as described earlier in this section of the manual.

If oil is to be filtered and reused, proceed as follows:

  (a) Obtain a self contained power filtration unit. One unit that can be used is a Schroeder Filter Buggy, model HFB-8-3K3-1 (FMC P/N 76J1466). This unit filters contamination down to a three micron level, and incorporates a warning device that signals when its filters are clogged.
  (b) Connect the outlet line of the filter buggy to the fill holes on the hydraulic reservoir drain hole.
  (c) Turn the filter buggy on and filter the oil through the filter buggy back into the hydraulic reservoir.

Note: Make occasional checks on the dirt alarm on the filter buggy, and change its filters when necessary.

The oil must be filtered until the contaminate level is below that shown in Fig. 5-35.

(8) Open butterfly valve and prime pumps and motors as necessary, as described earlier in this section of the manual.
(9) Obtain an oil sample as described earlier in this section of the manual.
(10) If the contamination level is below that shown in Fig. 5-35, put the machine back to work. After 50 hours of operation, change all oil filters.

Subject | Page No.

General Hydraulics....7-3
Hydraulic Piston Pumps....7-3
Circuit Charge Pumps....7-3
External Charge Pump....7-3
Hydraulic Motors....7-3
Relief Valves....7-4
Divertor Valve....7-4
Divertor Shift Valve....7-4
Counterbalance Valves....7-4
Cooling Shuttle Valves....7-4
Variable Speed Control Valves....7-4
Hydraulic Reservoir....7-4
Filters And Strainers....7-5
Oil Cooler....7-5
Lines And Fittings....7-5
Hydraulic Circuits....7-5
Charge Circuit....7-6
Main Circuits....7-6
Cooling Circuit....7-6
Shifting Circuit....7-7
Auxiliary Pump Divertor Circuit....7-7
Motor Drain Circuit....7-7
Erection Sequence Hydraulic Procedure....7-7
Pneumatic Supply Circuit....7-13
Pneumatic Control Circuit....7-13

Figures | Page No.

Fig. 7-1 Main Hoist Circuit....7-3
Fig. 7-2 Boom Hoist Circuit....7-3
Fig. 7-3 Swing Circuit....7-4
Fig. 7-4 Main Hoist Shifting Circuit....7-4
Fig. 7-5 Oil Cooler Valve....7-5
Fig. 7-6 Auxiliary Hoist Circuit....7-5
Fig. 7-7 Winch Unit Drain Lines....7-6
Hydraulic Schematics....7-7
Pneumatic Schematics....7-13

Notes:

General

The hydraulic system is a highly efficient means of transmitting power from the engine to the various functions. The hydraulic system, together with the pneumatic system, gives control of the speed and direction of any particular function. This allows precise positioning of a load.

Each crane function is powered by a closed loop circuit that allows braking of a load without any additional braking effort. Holding brakes prevent drifting down of a suspended load due to any internal leakage in the hydraulic circuit.

The hydraulic system is composed of the following components:

Hydraulic Piston Pumps: The main hoist, boom hoist, auxiliary hoist and swing pumps are variable displacement, axial piston with bi-directional flow capabilities. They are powered by the engine through the pump drive gearbox. The direction and volume of oil flow is controlled by the pneumatic system.

Circuit Charge Pumps: Each hydraulic piston pump has a fixed displacement charge pump mounted to it. The charge pump is driven at pump shaft speed to:

(1) Supply oil under pressure to maintain a positive pressure on the low pressure side of the pump/motor circuits.
(2) Provide sufficient oil under pressure for control purposes and for make up of internal leakage.
(3) Provide a flow of oil through the hydraulic circuit for cooling purposes.

External Charge Pump: The external (or precharge) pump is mounted to the pump drive gearbox and provides oil to the circuit charge pumps at a positive pressure.

Hydraulic Motors: The main hoist and auxiliary hoist motors are two-speed, bi-directional units. The boom hoist and swing motors are single speed, bi-directional motors. The direction of rotation, speed and torque of the motors are dependent on the pump outputs.

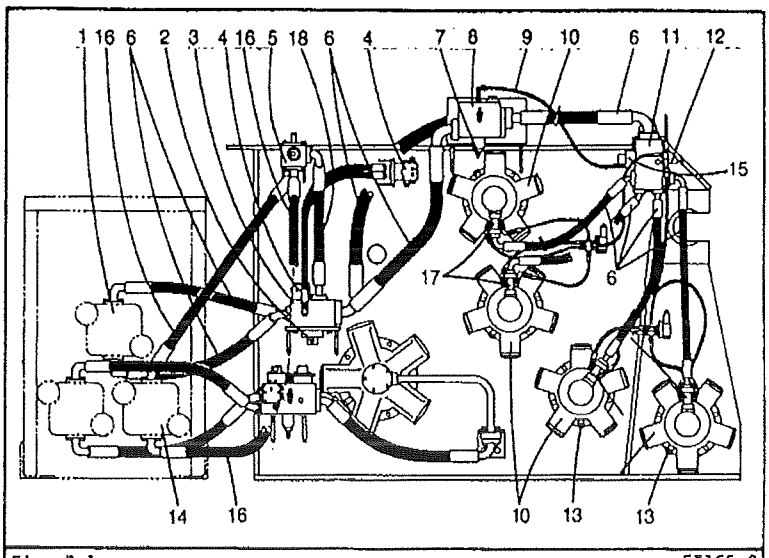


Fig. 7-1 FT165-C
Main Hoist Circuit

(1) M/H Pump
(2) M/H Lowering Relief Valve
(3) M/H Valve Block
(4) Cooling Shuttle Valve
(5) Divertor Valve
(6) Main Hoist Power Hyd. Hoses
(7) M/H Counterbalance Valve Cartridge
(8) M/H Counterbalance Valve Block
(9) Counterbalance Valve Pilot Line
(10) M/H Motors (3-TG1500,4-TG1900-2300-2300B)
(11) M/H Junction Block
(12) Needle Valve
(13) Crankcase Relief Valve
(14) A/H Pump
(15) M/H Raising Relief Valve
(16) A/H Power Hyd. Hoses
(17) M/H Hydraulic Tube Assembly
(18) A/H Divertor Hoses

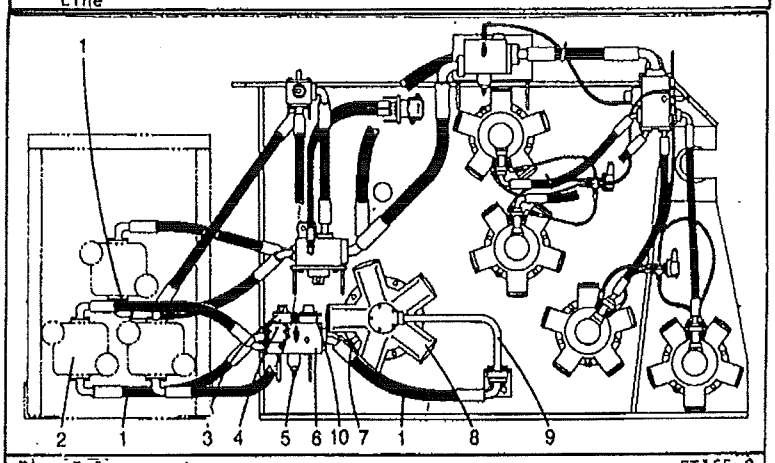


Fig. 7-2 FT165-C
Boom Hoist Circuit

(1) B/H Power Hydraulic Hoses
(2) B/H Pump
(3) B/H Lowering Relief Valve
(4) Cooling Shuttle Valve
(5) Counterbalance Valve Cartridge
(6) B/H Valve Block
(7) Crankcase Relief Valve
(8) B/H Motor
(9) B/H Hydraulic Tube Assembly
(10) B/H Raising Relief Valve

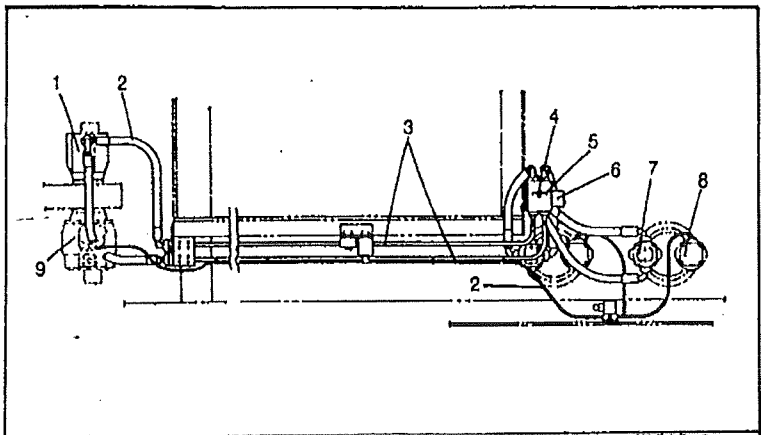


Fig. 7-3 FT585-C
Swing Circuit
(1) Swing Pump
(2) Hydraulic Hoses
(3) Hydraulic Tubing
(4) Free Swing Valve
(5) Swing Valve Block
(6) Crossover Relief Valve Block
(7) Swing Motor
(8) Swing Brake
(9) A/H Pump

Cooling Shuttle Valves: Each of the hydraulic circuits has a cooling shuttle valve mounted to the valve block. The main hoist circuit has one additional cooling shuttle valve mounted to a separate manifold. The cooling shuttle valve works in conjunction with the circuit charge pumps to supply a continuous flow of cooling oil into the circuits.

Variable Speed Control Valves: The solenoid operated variable speed control valves apply pressure to either the large or small displacement ports of the hydraulic motors, depending on the speed mode that is selected.

Hydraulic Reservoir: The hydraulic reservoir (or sump tank) provides a storage compartment for the hydraulic oil. In addition to storage, it aids in cooling by mixing the oil from the oil cooler with

Relief Valves: The relief valves in each circuit protect the components of the circuit from damage due to excessive pressure.

Divertor Valve: The divertor valve is located between the auxiliary hoist pump and the auxiliary hoist valve block. It is also connected to the main hoist valve block. It channels the output oil from the auxiliary hoist pump to either the auxiliary hoist circuit or the main hoist circuit, depending on whether the main/auxiliary hoist selector valve in the operator's cab is set at "Aux" or "Main Hoist".

Divertor Shift Valve: The pneumatically actuated directional control valve supplies hydraulic shifting pressure to the divertor valve. It is actuated by the main/auxiliary hoist selector valve in the operator's cab. (See #5 in Fig. 7-7.)

Counterbalance Valves: A counterbalance valve is incorporated into the hoist side of the main, auxiliary and boom hoist circuits. It assures that a positive pressure controls load lowering.

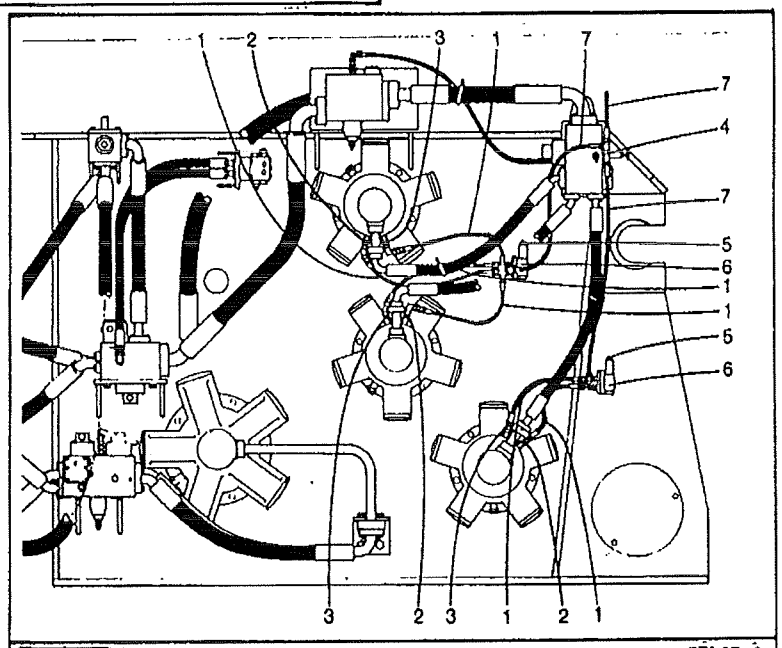


Fig. 7-4 FT165-C
Main Hoist Shifting Circuit
(1) Shifting Lines
(2) Shift Control Port (Sm. Displ.)
(3) Shift Control Port (Lg. Displ.)
(4) Check Valve
(5) Manual Override Button
(6) Variable Speed Control Valve
(7) Pressure Supply Lines

the system oil to maintain proper operating temperatures. The hydraulic reservoir aids in preventing component failures from aeration by allowing the air to separate from the oil. It also allows any contaminates to settle to the bottom of the tank.

Filters And Strainers: Two filter assemblies and a suction strainer remove any foreign particles from the system. The suction strainer protects the inlet of the external charge pump from any contamination present in the reservoir. The charge filter, located between the external charge pump and the charge manifold, filters the oil prior to its entering the hydraulic circuits. The return filter is located in the hydraulic reservoir and filters the pump case drain oil and cooling oil on its return from the hydraulic circuits. Case drain oil from the motors and return oil from the shifting circuit bypass the return filter because of low case pressure requirements.

The use of filters and proper maintenance procedures will aid in prolonging the life of system components. See Section 5 of this manual for filter change procedure.

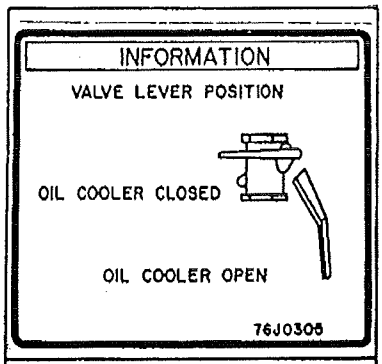


Fig. 7-5 FT93-A
Oil Cooler Valve

Oil Cooler: The oil cooler is mounted between the engine fan and the radiator. It assists in maintaining proper system oil temperature. Cooling the oil prevents it from breaking down, thereby avoiding loss of lubricating properties and the formation of corrosion and varnish on internal components of the hydraulic system. The hydraulic oil temperature should never exceed 160° F. (72° C.).

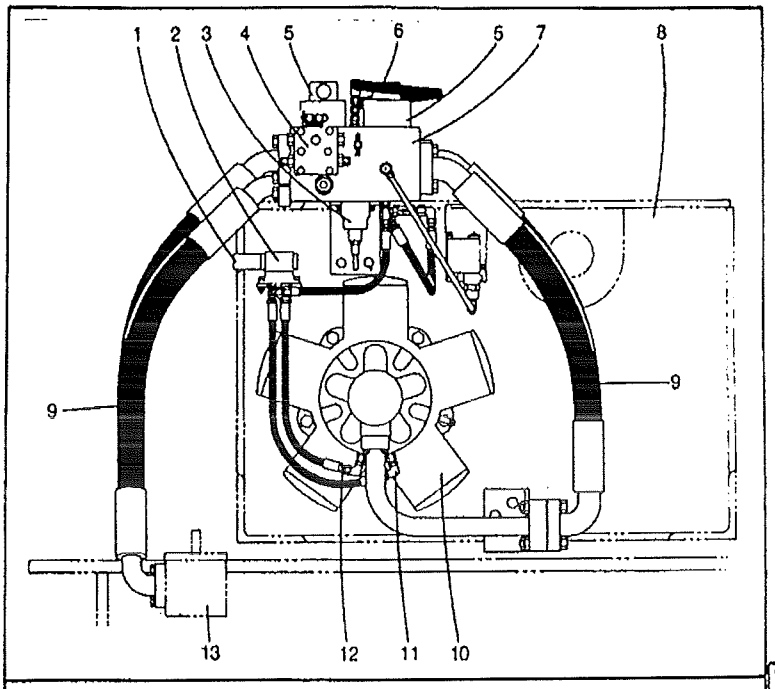


Fig. 7-6 FT204-C
Auxiliary Hoist Circuit

(1) Manual Override Button
(2) Variable Speed Control Valve
(3) Counterbalance Valve Cartridge
(4) Cooling Shuttle Valve
(5) A/H Lowering Relief Valve
(6) Counterbalance Valve Pilot Line
(7) A/H Valve Block
(8) A/H Winch Unit
(9) Power Hydraulic Hoses
(10) A/H Motor
(11) Shift Control Port (Low Displ)
(12) Shift Control POrt (High Displ.)
(13) Divertor Valve

**CAUTION**

Never Operate The Machine For Extended Periods Of Time With The Oil Cooler Valve Closed. Overheating Will Result And Cause Machine Damage.

Lines And Fittings: The hydraulic lines and fittings complete the circuit between components.

Outside hoses designate the "up" mode. Inside hoses designate the "down" mode.

**CAUTION**

Never Seal Or Close Off The Windows On Either Side Of The Engine While Operating The Crane. Overheating Will Result And Cause Machine Damage.

Hydraulic Circuits

The hydraulic system contains six circuits: charge, main, cooling, shifting, auxiliary pump divertor, and drain. See Figs. 7-1 through 7-7 and the Hydraulic Schematics at the end of this section.

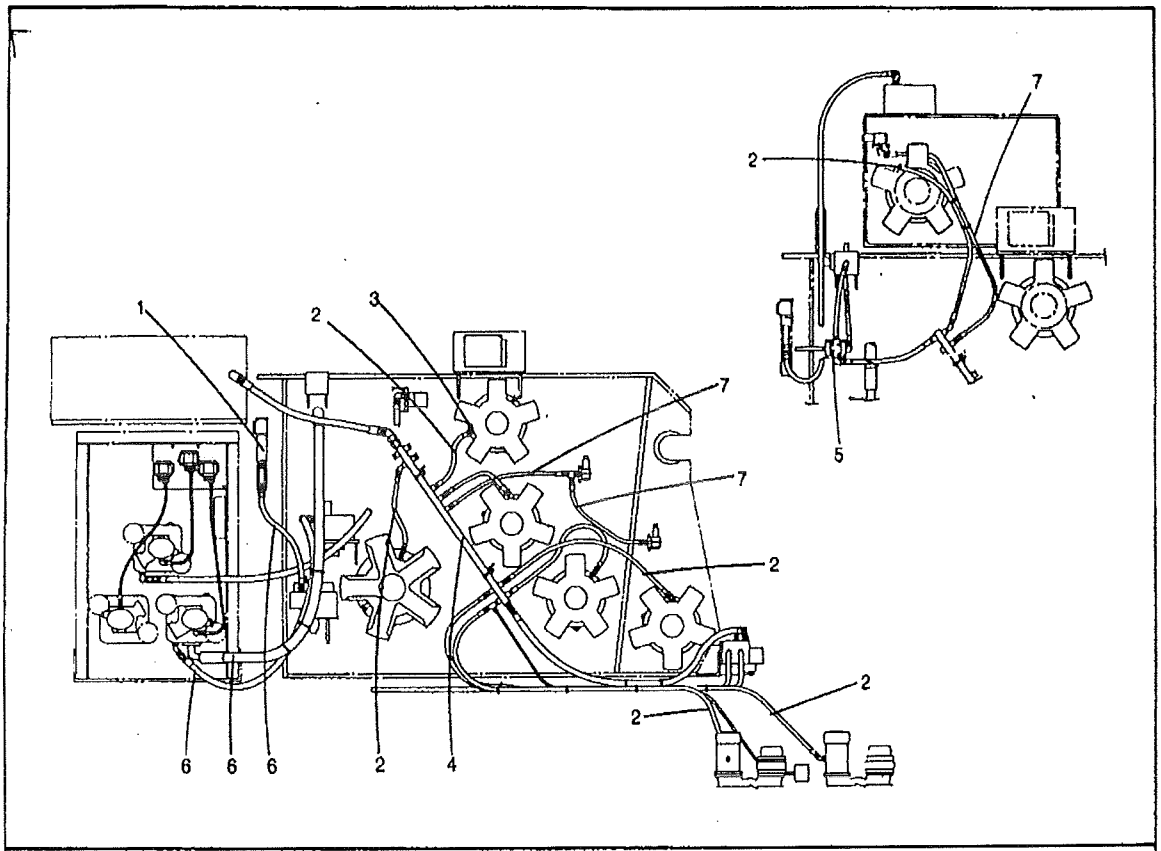


Fig. 7-7
Winch Unit Drain Lines

FT338-D

(1) Return Manifold
(2) Drain Lines
(3) Motor Case Drain Fittings
(4) Drain Manifold
(5) Divertor Shift Valve
(6) Cooling Shuttle Return Line
(7) Variable Speed Control Valve Return Lines

Charge Circuit: The charge circuit consists of the external charge pump, charge filter, oil cooler and relief valve. The charge circuit ensures positive pressure to the circuit charge pumps. Hydraulic oil flows from the hydraulic reservoir to the external charge pump where it is pressurized. The oil then flows through the charge filter, through the cooler, and on to the circuit charge pumps mounted on the hydralic piston pumps. The relief valve, located between the external charge pump and the charge filter, protects the charge system from excess pressure should the charge filter become clogged.

Main Circuits: There are four main hydraulic circuits: main hoist, auxiliary hoist, boom hoist, and swing. The oil flows through the hydraulic circuits in a continuous loop. The quantity of oil flow is determined by pump speed and pump control handle position, while direction of flow is determined by the direction of rotation of the pump control handle from neutral. Oil from the circuit charge pump is directed to the low pressure side of the main circuit to make up for any internal leakage and provide circuit cooling.

Cooling Circuit: The cooling circuit consists of the oil cooler, oil cooler valve, cooling shuttle valves, and the return filter. The oil cooler valve is located in the inlet line to the oil cooler. This valve, when in the "closed" position (see Fig. 7-5) blocks oil flow to the oil cooler and permits rapid warm-up of the hydraulic system. The cooling shuttle valves establish a circuit between the low pressure side of the main circuits and the hydraulic reservoir. As the circuit charge pump adds oil to the low pressure side of the main circuit, hot oil is forced out of the main circuit at the cooling shuttle valve. The oil is then filtered

by the return filter in the hydraulic reservoir. The excess oil from the pump case drain is also routed to the hydraulic reservoir.

Shifting Circuit: The main and auxiliary hoist circuits are designed so that the speed of the hoist drums can be varied, depending on the weight of the load. This is accomplished by changing the motor displacement with hydraulic pressure. Pressure is routed through the solenoid operated variable speed control (shifting) valves to either the large or small displacement ports of the motors.

Auxiliary Pump Divertor Circuit: The air over hydraulic divertor shift valve utilizes supply oil from the main hoist charge pump and directs it to either pilot port on the divertor valve, depending on the position of the main/auxiliary hoist selector valve in the operator's cab.

Motor Drain Circuit: All hydraulic motors use hydraulic oil from the main circuits to provide cooling and lubricating oil to the internal components of the motor. This oil is discharged through the case drain line and is routed to a common drain manifold. The case drain oil, along with the return oil from the divertor valve shifting circuit and the motor shifting circuit, is routed to the hydraulic reservoir.

Erection Sequence Hydraulic Procedure

During the erection sequence, several hydraulic hoses must be assembled to the main pumps, relief valve blocks and motors. See Section 3 of this manual for erection procedure.

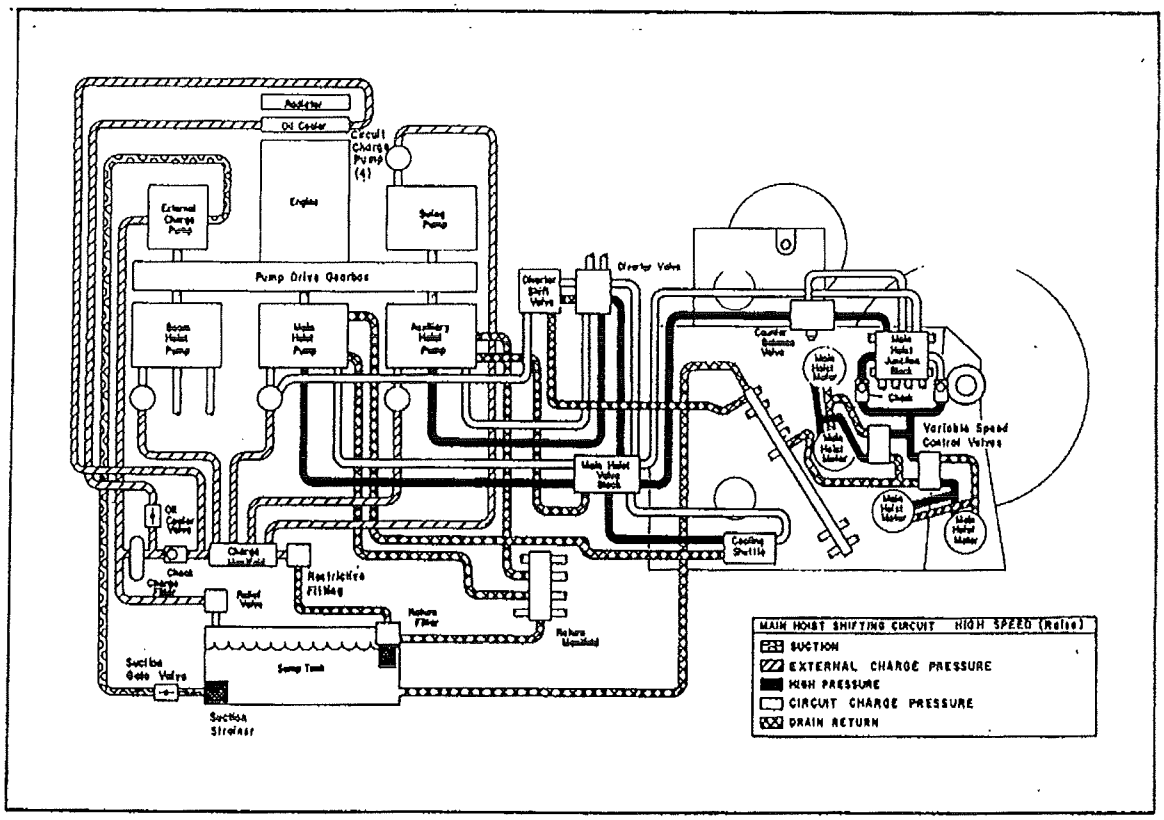

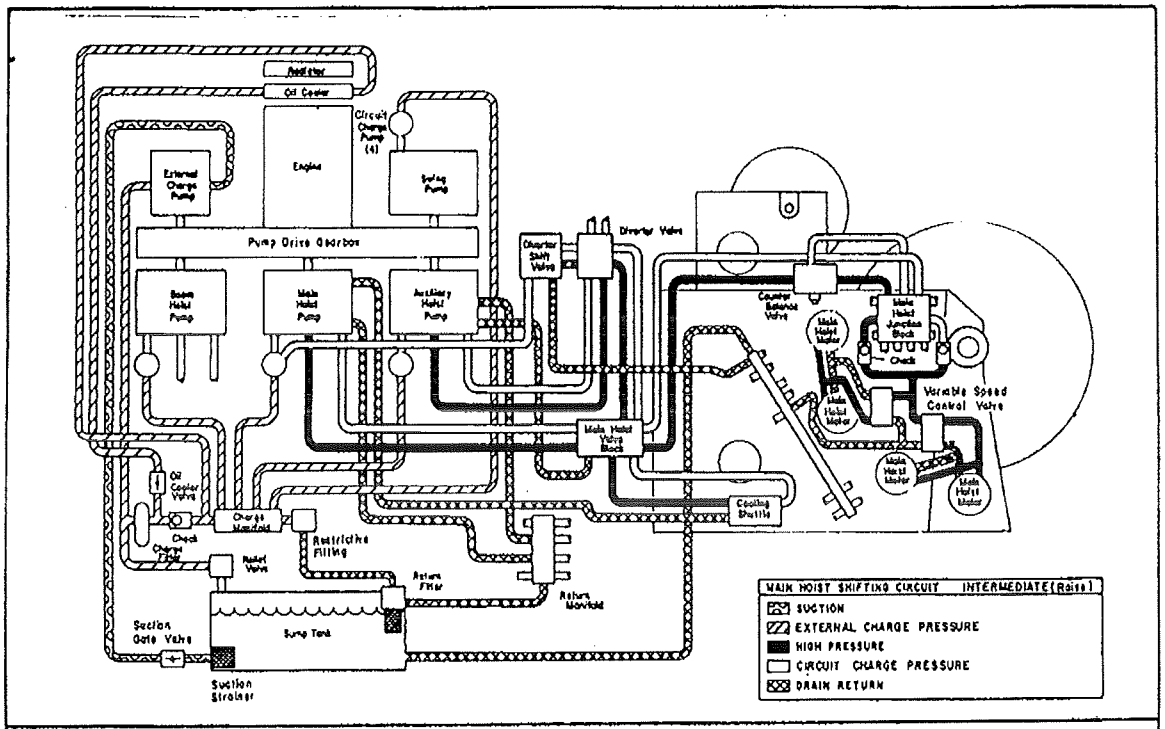
Radiator
Oil Cooler
Circuit Charge Pump (4)
Engine
External Charge Pump
Swing Pump
Pump Drive Gearbox
Boom Hoist Pump
Main Hoist Pump
Auxiliary Hoist Pump
Diverter Valve
Counter Balance Valve
Main Hoist Junction Block
Check
Variable Speed Control Valve
Main Hoist Motor
Main Hoist Valve Block
Cooling Shuttle
Oil Cooler Valve
Charge Manifold
Restrictive Fitting
Return Filter
Return Manifold
Sump Tank
Suction Gate Valve
Suction Strainer
MAIN HOIST SHIFTING CIRCUIT INTERMEDIATE(Raise)
SUCTION
EXTERNAL CHARGE PRESSURE
HIGH PRESSURE
CIRCUIT CHARGE PRESSURE
DRAIN RETURN

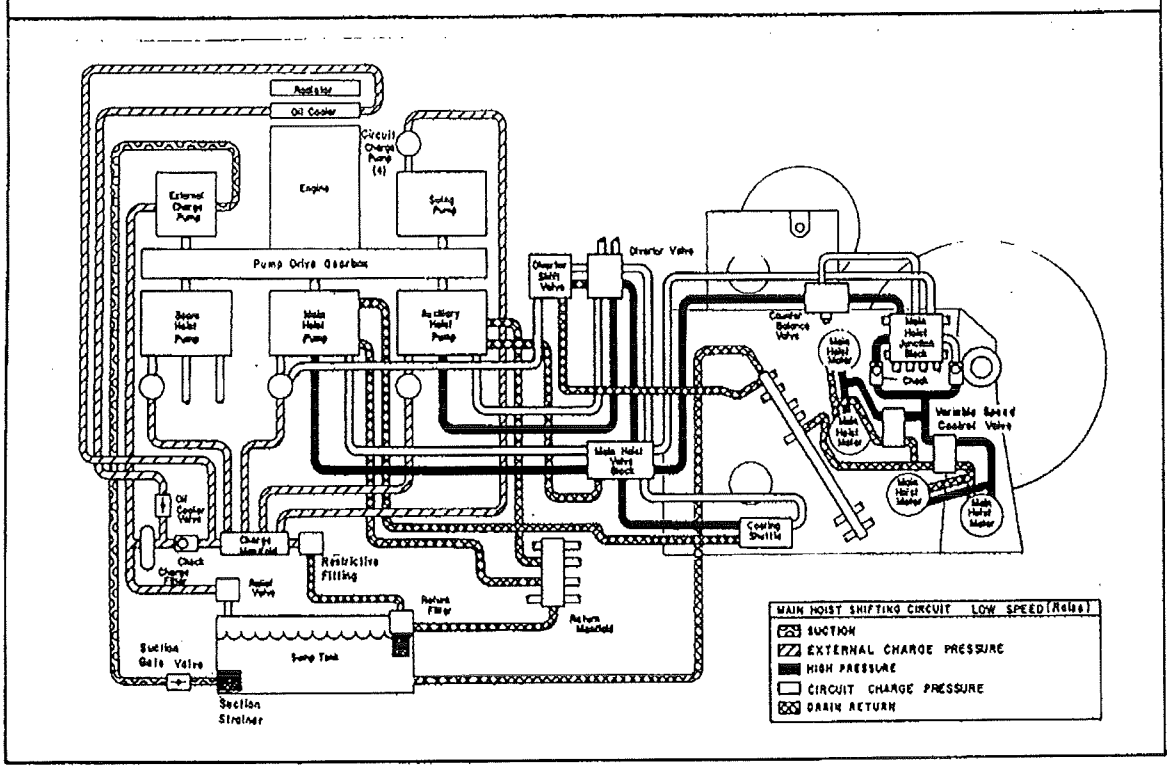
Radiator
Oil Cooler
Circuit Charge Pump (4)
Engine
External Charge Pump
Swing Pump
Pump Drive Gearbox
Boom Hoist Pump
Main Hoist Pump
Auxiliary Hoist Pump
Diverter Valve
Counter Balance Valve
Main Hoist Junction Block
Check
Variable Speed Control Valve
Main Hoist Motor
Main Hoist Valve Block
Cooling Shuttle
Oil Cooler Valve
Charge Manifold
Restrictive Fitting
Return Filter
Return Manifold
Sump Tank
Suction Gate Valve
Suction Strainer
MAIN HOIST SHIFTING CIRCUIT LOW SPEED(Raise)
SUCTION
EXTERNAL CHARGE PRESSURE
HIGH PRESSURE
CIRCUIT CHARGE PRESSURE
DRAIN RETURN

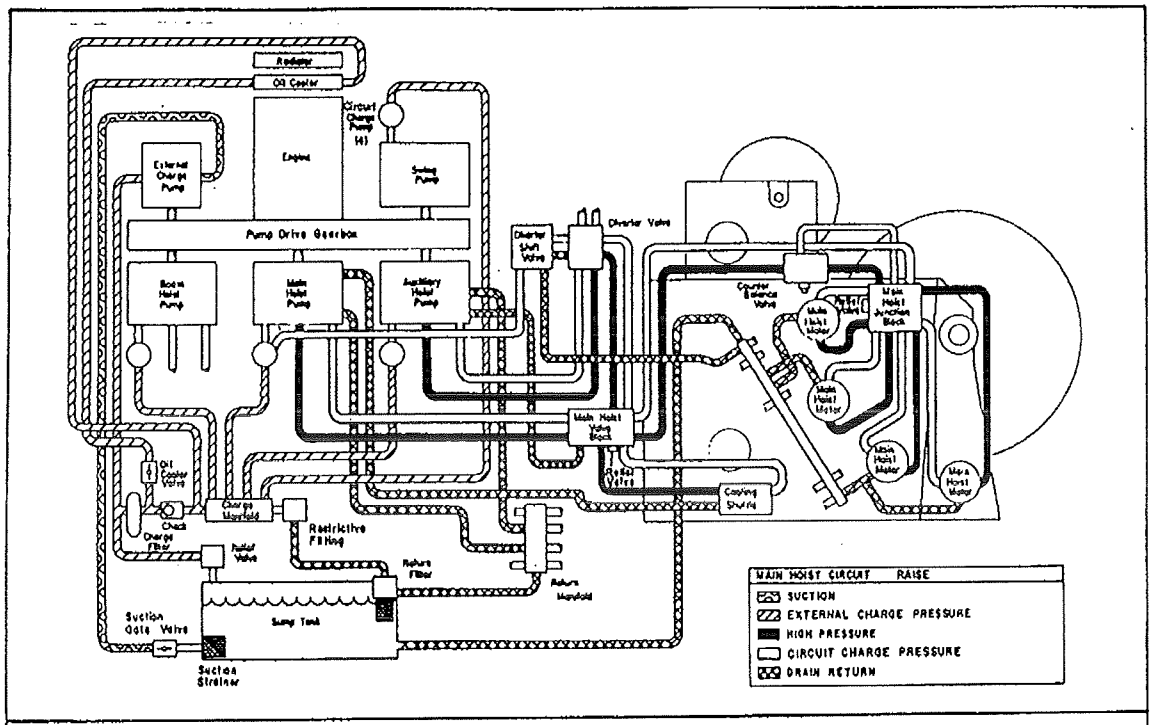
Radiator
Oil Cooler
Circuit Charge Pump (4)
Engine
External Charge Pump
Swing Pump
Pump Drive Gearbox
Boom Hoist Pump
Main Hoist Pump
Auxiliary Hoist Pump
Charter Shift Valve
Charter Valve
Counter Balance Valve
Main Hoist Junction Block
Main Hoist Motor
Main Hoist Valve Block
Relief Valve
Cooling Shunts
Oil Cooler Valve
Check
Charge Filter
Charge Manifold
Restrictive Fitting
Return Filter
Return Manifold
Suction Gate Valve
Sump Tank
Suction Strainer
MAIN HOIST CIRCUIT RAISE
SUCTION
EXTERNAL CHARGE PRESSURE
HIGH PRESSURE
CIRCUIT CHARGE PRESSURE
DRAIN RETURN

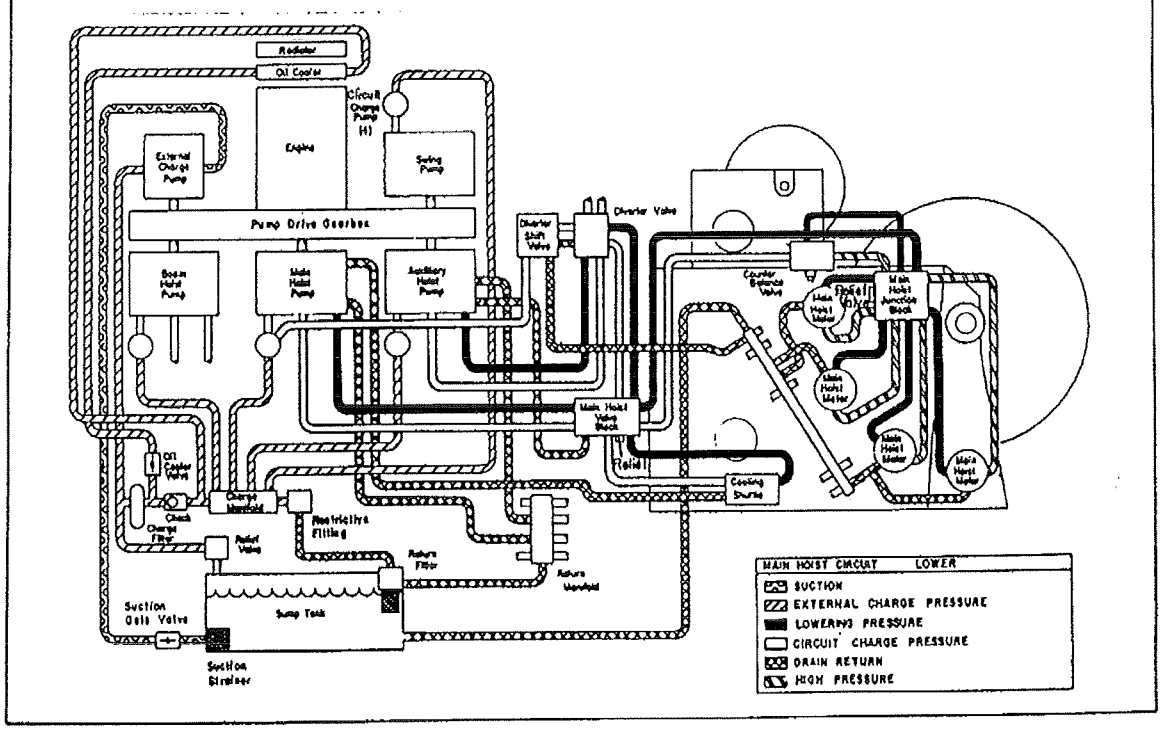
Radiator
Oil Cooler
Circuit Charge Pump (4)
Engine
External Charge Pump
Swing Pump
Pump Drive Gearbox
Boom Hoist Pump
Main Hoist Pump
Auxiliary Hoist Pump
Charter Shift Valve
Charter Valve
Counter Balance Valve
Main Hoist Junction Block
Main Hoist Motor
Main Hoist Valve Block
Relief
Cooling Shunts
Oil Cooler Valve
Check
Charge Filter
Charge Manifold
Restrictive Fitting
Return Filter
Return Manifold
Suction Gate Valve
Sump Tank
Suction Strainer
MAIN HOIST CIRCUIT LOWER
SUCTION
EXTERNAL CHARGE PRESSURE
LOWERING PRESSURE
CIRCUIT CHARGE PRESSURE
DRAIN RETURN
HIGH PRESSURE

7

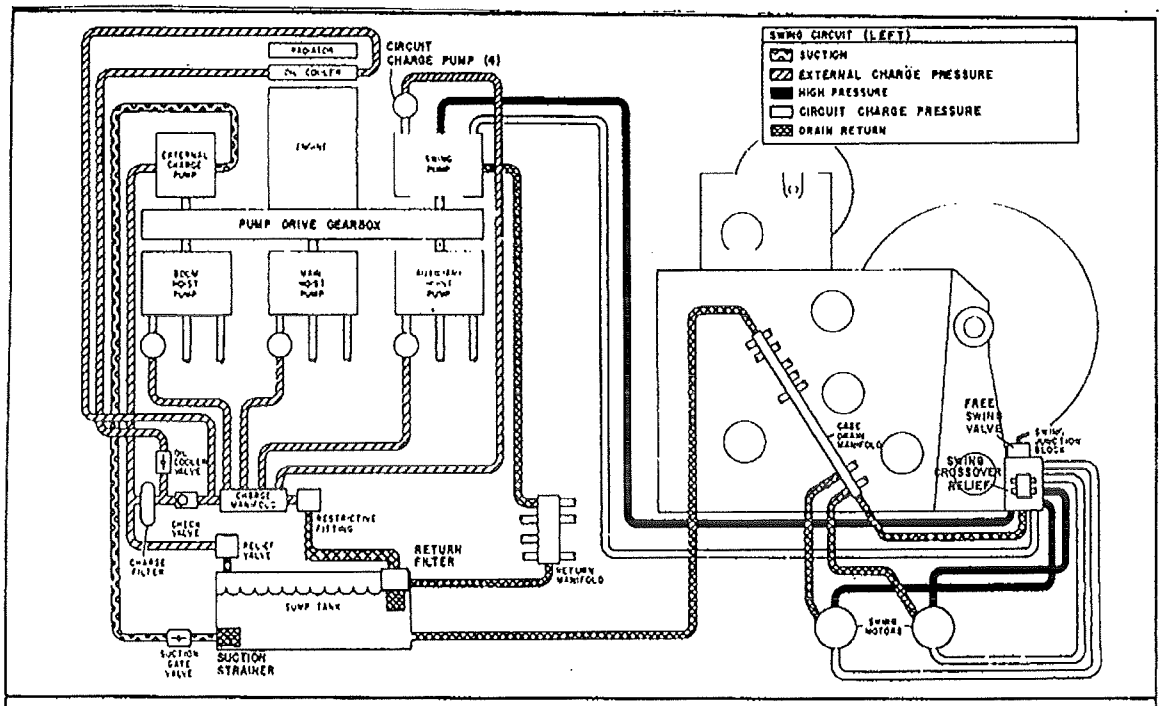
SWING CIRCUIT (LEFT)
SUCTION
EXTERNAL CHARGE PRESSURE
HIGH PRESSURE
CIRCUIT CHARGE PRESSURE
DRAIN RETURN
CIRCUIT CHARGE PUMP (4)
PUMP DRIVE GEARBOX
FREE SWING VALVE
SWING CROSSOVER RELIEF
RETURN FILTER
SUCTION STRAINER

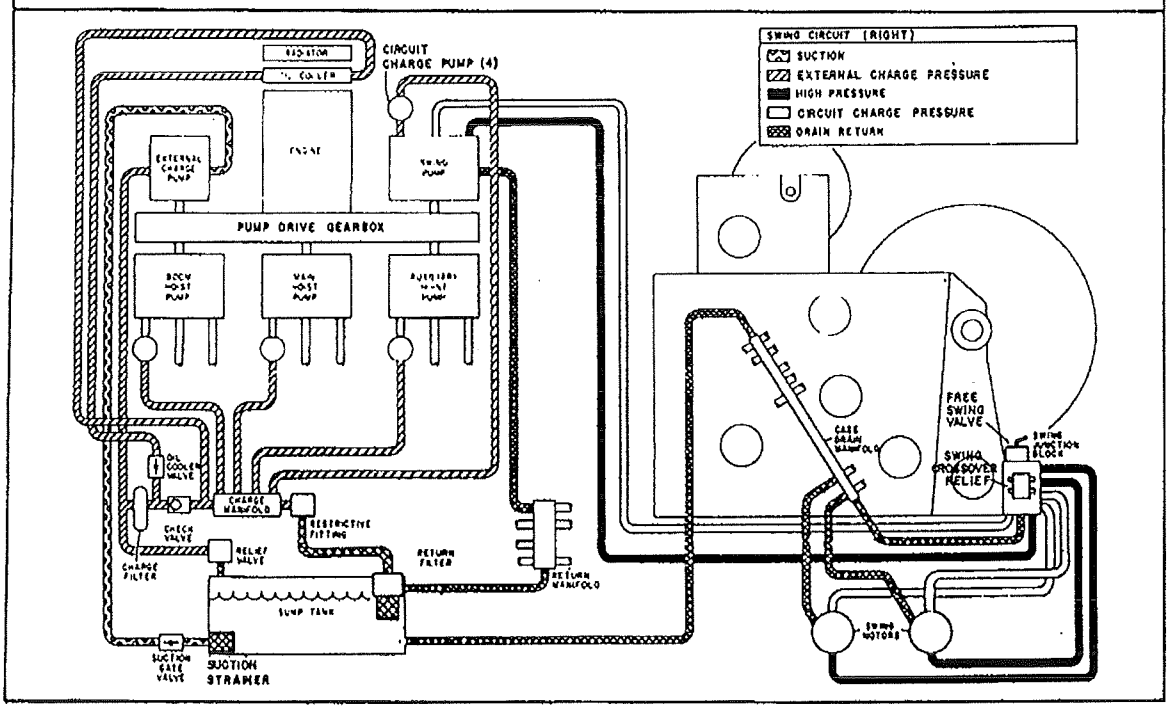
SWING CIRCUIT (RIGHT)
SUCTION
EXTERNAL CHARGE PRESSURE
HIGH PRESSURE
CIRCUIT CHARGE PRESSURE
DRAIN RETURN
CIRCUIT CHARGE PUMP (4)
PUMP DRIVE GEARBOX
FREE SWING VALVE
SWING CROSSOVER RELIEF
RETURN FILTER
SUCTION STRAINER

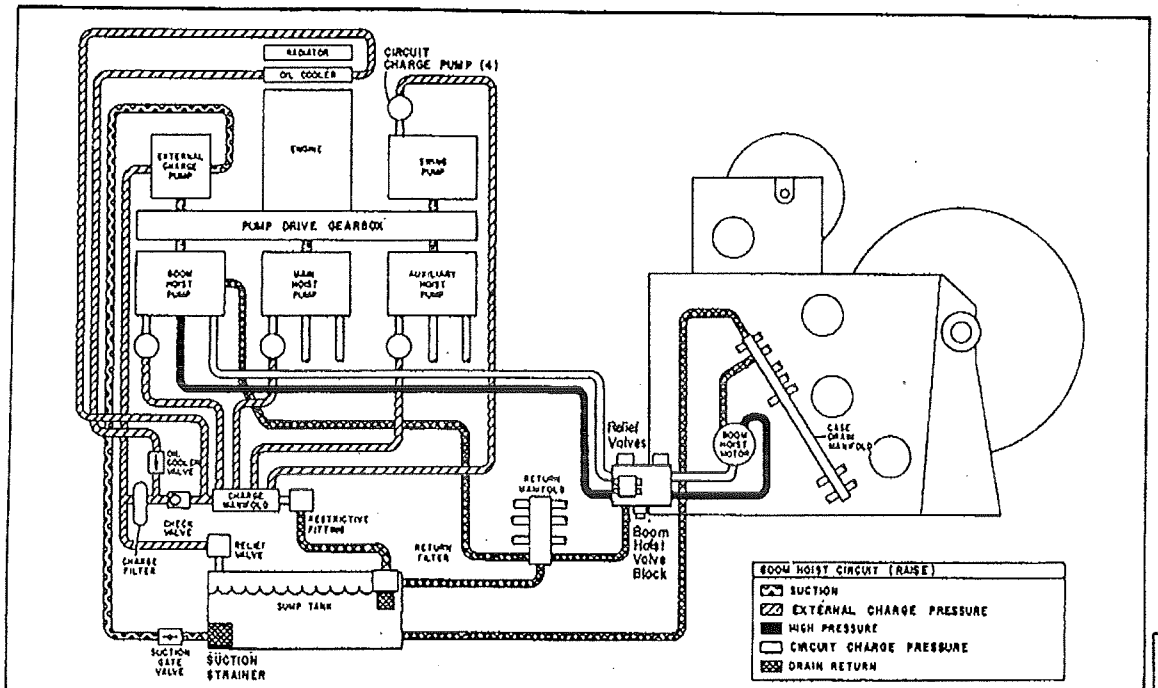
RADIATOR
OIL COOLER
CIRCUIT CHARGE PUMP (4)
ENGINE
EXTERNAL CHARGE PUMP
SWING PUMP
PUMP DRIVE GEARBOX
BOOM HOIST PUMP
MAIN HOIST PUMP
AUXILIARY HOIST PUMP
Relief Valves
BOOM HOIST MOTOR
CASE DRAIN MANIFOLD
OIL COOLER VALVE
CHARGE MANIFOLD
RESTRICTIVE FITTING
CHECK VALVE
RELIEF VALVE
CHARGE FILTER
RETURN FILTER
RETURN MANIFOLD
Boom Hoist Valve Block
SUMP TANK
SUCTION GATE VALVE
SUCTION STRAINER
BOOM HOIST CIRCUIT (RAISE)
SUCTION
EXTERNAL CHARGE PRESSURE
HIGH PRESSURE
CIRCUIT CHARGE PRESSURE
DRAIN RETURN

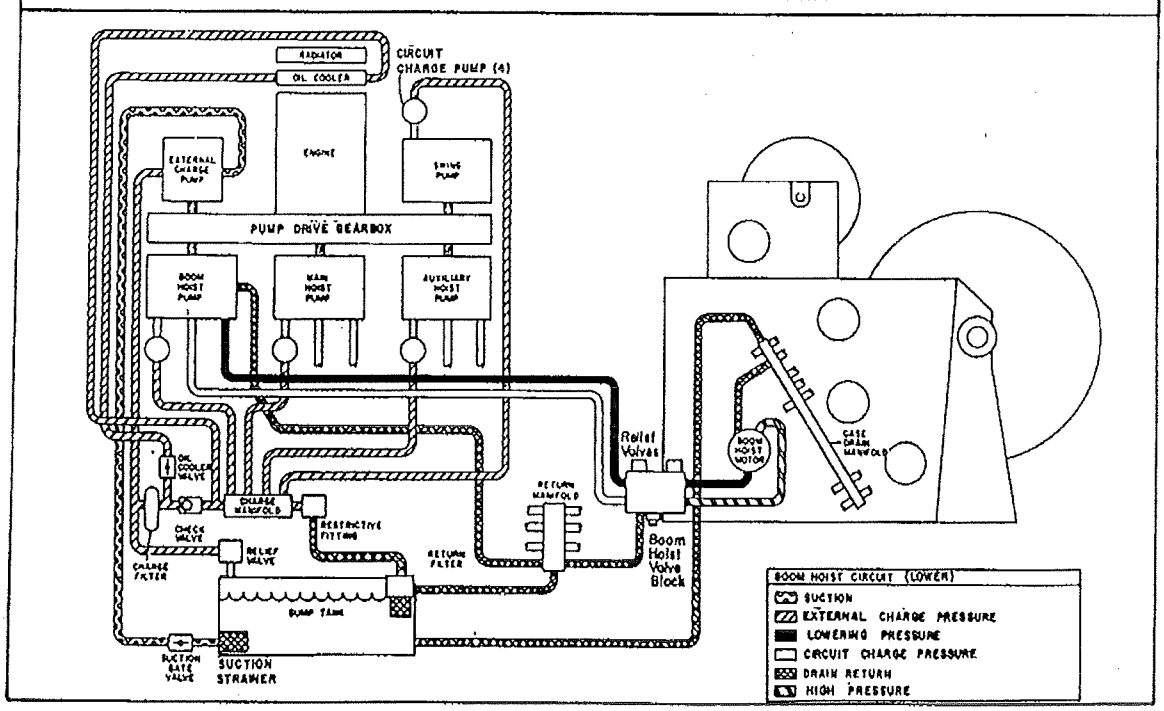
RADIATOR
OIL COOLER
CIRCUIT CHARGE PUMP (4)
ENGINE
EXTERNAL CHARGE PUMP
SWING PUMP
PUMP DRIVE GEARBOX
BOOM HOIST PUMP
MAIN HOIST PUMP
AUXILIARY HOIST PUMP
Relief Valves
BOOM HOIST MOTOR
CASE DRAIN MANIFOLD
OIL COOLER VALVE
CHARGE MANIFOLD
RESTRICTIVE FITTING
CHECK VALVE
RELIEF VALVE
CHARGE FILTER
RETURN FILTER
RETURN MANIFOLD
Boom Hoist Valve Block
SUMP TANK
SUCTION GATE VALVE
SUCTION STRAINER
BOOM HOIST CIRCUIT (LOWER)
SUCTION
EXTERNAL CHARGE PRESSURE
LOWERING PRESSURE
CIRCUIT CHARGE PRESSURE
DRAIN RETURN
HIGH PRESSURE

7

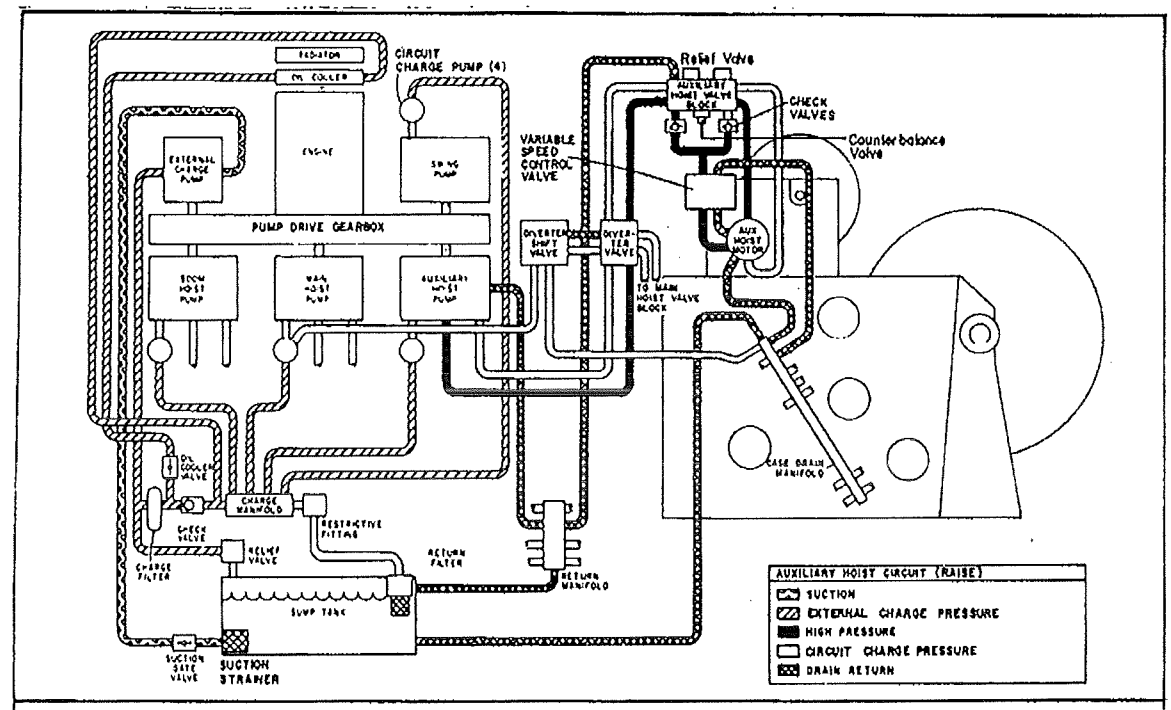
CIRCUIT CHARGE PUMP (4)
Relief Valve
CHECK VALVES
Counterbalance Valve
VARIABLE SPEED CONTROL VALVE
PUMP DRIVE GEARBOX
TO MAIN HOIST VALVE BLOCK
CASE DRAIN MANIFOLD
CHARGE MANIFOLD
RESTRICTIVE FITTING
RETURN FILTER
RETURN MANIFOLD
SUMP TANK
SUCTION STRAINER
AUXILIARY HOIST CIRCUIT (RAISE)
SUCTION
EXTERNAL CHARGE PRESSURE
HIGH PRESSURE
CIRCUIT CHARGE PRESSURE
DRAIN RETURN

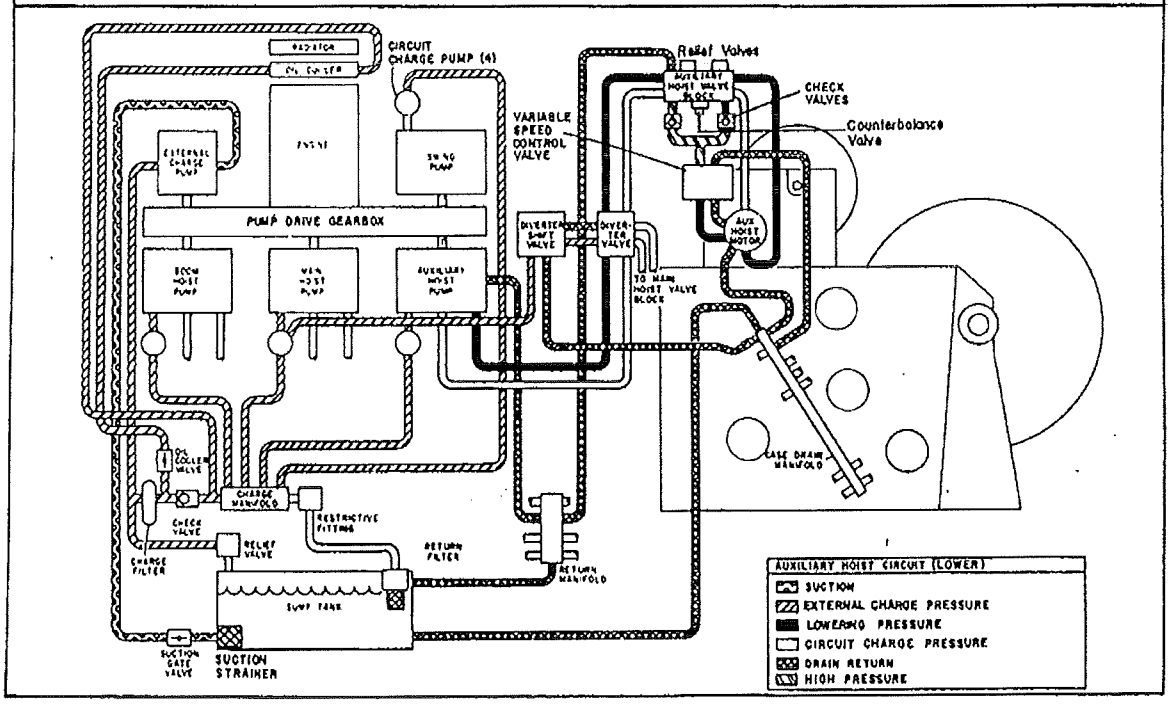
CIRCUIT CHARGE PUMP (4)
Relief Valves
CHECK VALVES
Counterbalance Valve
VARIABLE SPEED CONTROL VALVE
PUMP DRIVE GEARBOX
TO MAIN HOIST VALVE BLOCK
CASE DRAIN MANIFOLD
CHARGE MANIFOLD
RESTRICTIVE FITTING
RETURN FILTER
RETURN MANIFOLD
SUMP TANK
SUCTION STRAINER
AUXILIARY HOIST CIRCUIT (LOWER)
SUCTION
EXTERNAL CHARGE PRESSURE
LOWERING PRESSURE
CIRCUIT CHARGE PRESSURE
DRAIN RETURN
HIGH PRESSURE

Pneumatic Supply Circuit

Air pressure is supplied at 12 cubic feet/min (5664 cu. cms/sec) by an air compressor driven by the engine. (See the Pneumatic Schematics on the following pages.) The pneumatic supply is maintained between 90 to 110 psi (621 to 758 kPa). When the pressure in the wet tank reaches these limits, a governor automatically either destrokes or cuts in the compressor.

An air dryer removes moisture from the system. A safety valve at the air dryer relieves the pneumatic circuit should the air pressure reach 150 psi (1034 kPa).

A pneumatic filter filters the system air. See Section 6 for filter change procedure.

**CAUTION**

To Avoid System Contamination, Do Not Put Oil Or Alcohol In The Pneumatic Filter.

An air pressue regulator controls system pressure at 100 psi (690 kPa) maximum.

A pneumatic lubricator provides lubrication to all control system components.

Note: To avoid a pneumatic lubricator malfunction, lubricate as directed in Section 6 of this manual.

The main air solenoid valve shuts down all pneumatic control functions and applies all hoist brakes by exhausting supply air pressure from the control circuit. The main air solenoid valve will de-energize if the ignition switch or the air controls switch on the operator's control console are turned to the "Off" position, or if the boost pressure on the circuit charge pumps falls below 100 psi (690 kPa).

Pneumatic Control Circuit

The pneumatic controls provide precise speed and directional control for each function.

Each hoist function is controlled by a triple acting, three-ported control valve which provides brake release control, in addition to pump control. The pump control ports are the variable pressure type which provide graduated control pressure depending on the amount of control lever movement. The brake release port is a non-graduated (on-off) type which provides supply pressure for releasing the brakes. The hoist control valves are provided with automatic spring return to the neutral, brake applied position.

The swing pump is controlled by two single-acting variable pressure control valves mounted to the floor of the operator's cab. The swing brake is controlled by an independent three-way valve mounted to the operator's control panel. The swing pump control valves are provided with automatic spring return to the neutral position.

The control valves supply control pressure to the pump positioners, which are double acting, spring-

7

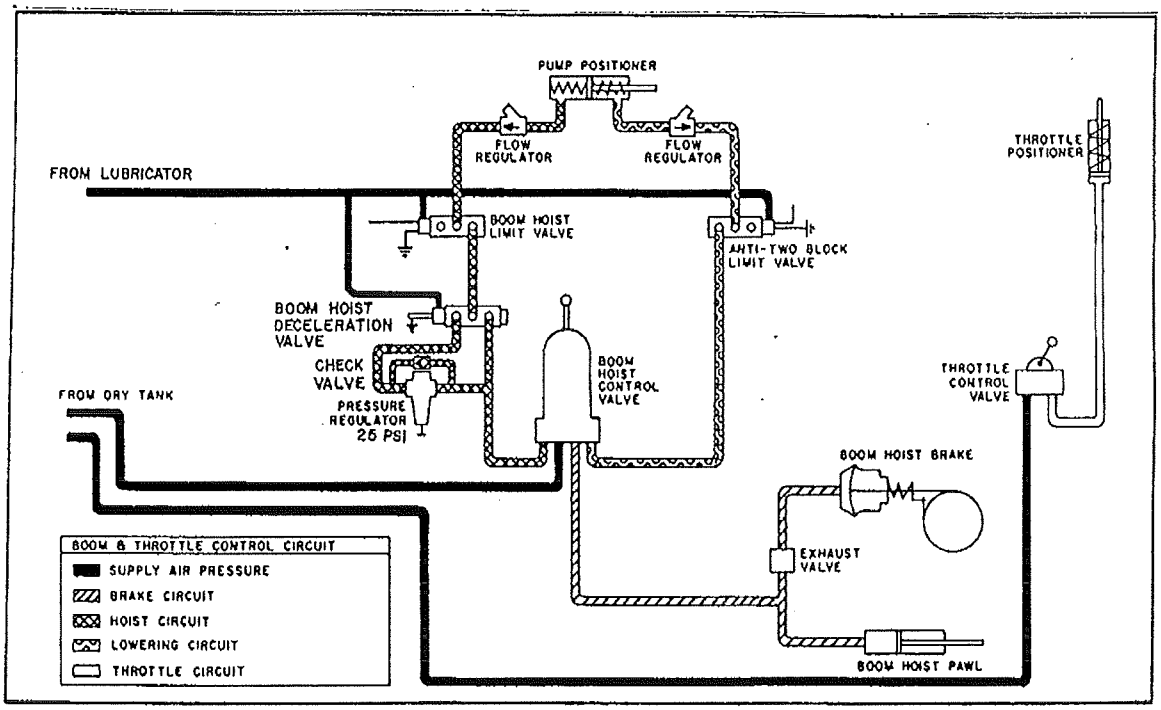

centered pneumatic cylinders. The pump positioners stroke the pumps in either the raise or lower direction for the hoist pumps, or the swing left or swing right direction for the swing pump. The direction and amount of stroke is dependent on the control valve lever movement. Air pressure from the control valves acts on either the rod side (for lowering or swing right) or the piston side (for raising or swing left) of the positioners.

Each hoist brake control is interlocked with the control valve so the brake cannot be applied when lowering until the hoist control lever returns to the neutral position. The hoist brake actuators consist of four compression springs in a sheet metal casing that apply pressure to a self-energizing band brake. Spring pressure is overcome and the brake released by a pneumatic diaphragm. The swing brake, which is a holding brake only, is spring applied and pneumatically released. A spring, internal to the brake actuator, forces the pawl into the teeth on the brake disc. Air pressure, when applied to the actuator, overcomes the spring pressure and disengages the pawl from the brake disc.

Additional pneumatic controls include a throttle control which provides for positive RPM setting anywhere between low and high idle. The control valve is a friction lever operated, three-way, pressure regulating valve. Air pressure is increased, decreased, or maintained at the out port according to lever position. The control valve supplies control pressure to the throttle positioner which is a single acting, spring-returned actuator.

The air horn is actuated by a push button controlled two-way valve.

The auxiliary pump divertor shift circuit is controlled by a lever operated, three-way selector valve located in the operator's cab. It supplies control pressure to the pilot operated divertor shift valve as well as three pilot operated three-way valves required to divert the flow of oil from the auxiliary pump to the main hoist circuit.

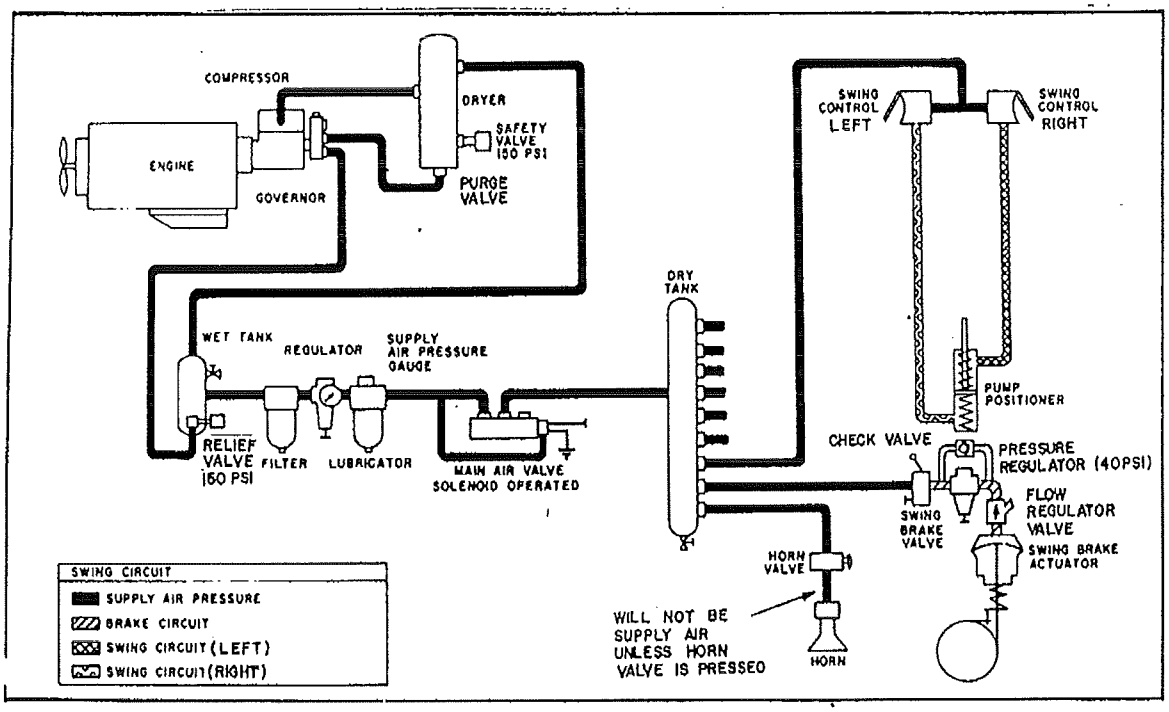

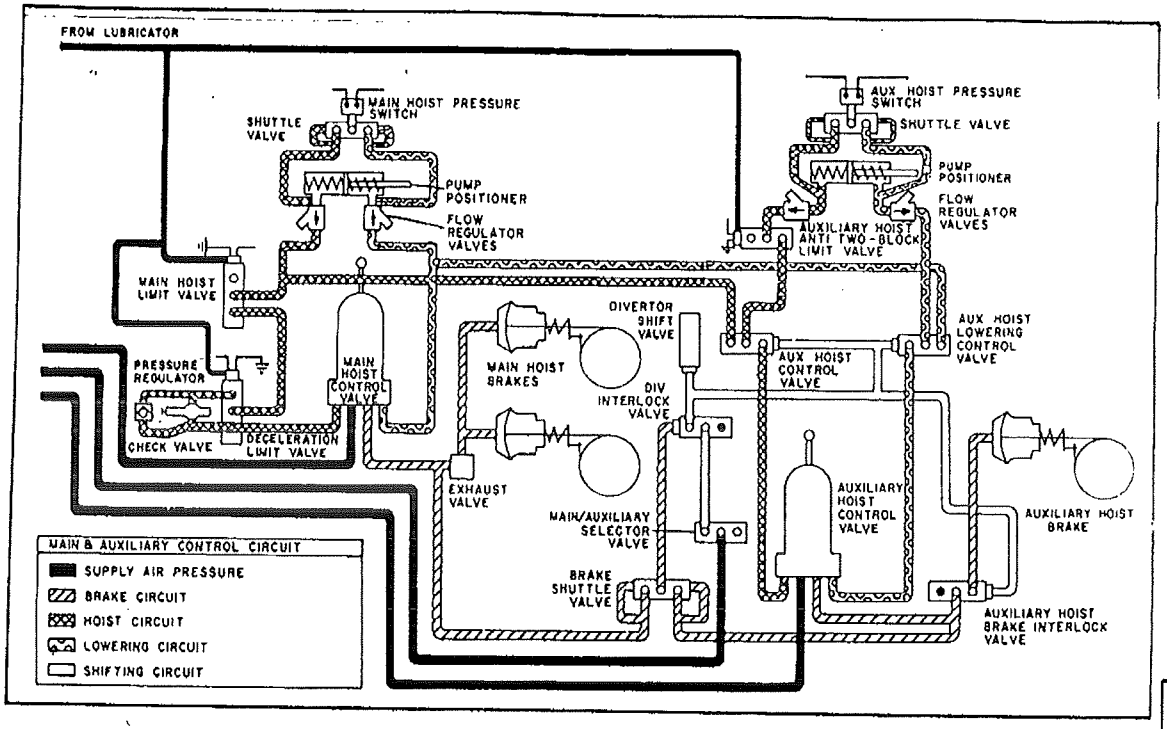
FROM LUBRICATOR
MAIN HOIST PRESSURE SWITCH
SHUTTLE VALVE
PUMP POSITIONER
FLOW REGULATOR VALVES
MAIN HOIST LIMIT VALVE
PRESSURE REGULATOR
CHECK VALVE
DECELERATION LIMIT VALVE
MAIN HOIST CONTROL VALVE
MAIN HOIST BRAKES
EXHAUST VALVE
DIVERTOR SHIFT VALVE
DIV INTERLOCK VALVE
MAIN/AUXILIARY SELECTOR VALVE
BRAKE SHUTTLE VALVE
AUX HOIST PRESSURE SWITCH
SHUTTLE VALVE
PUMP POSITIONER
FLOW REGULATOR VALVES
AUXILIARY HOIST ANTI TWO-BLOCK LIMIT VALVE
AUX HOIST LOWERING CONTROL VALVE
AUX HOIST CONTROL VALVE
AUXILIARY HOIST CONTROL VALVE
AUXILIARY HOIST BRAKE
AUXILIARY HOIST BRAKE INTERLOCK VALVE
MAIN & AUXILIARY CONTROL CIRCUIT
SUPPLY AIR PRESSURE
BRAKE CIRCUIT
HOIST CIRCUIT
LOWERING CIRCUIT
SHIFTING CIRCUIT

7

Chart 3
Pump Flow Specifications - Tower/Gantry Without Charge Filtration

| Machine Model | Function | GPM | LPM | PSI | kPa | (1) Shaft RPM | (2) Rot. | (3) Pressure Port Size | Descr. | SAE Rating | Estimated Weight Lbs. | Kg. |
|---|---|---|---|---|---|---|---|---|---|---|---|---|
| 1500 | Main Hoist | 91<br>77 | 346<br>293 | 500<br>3,000 | 3,447<br>20,685 | 2,100<br>1,850 | CW | 1.5 | SAE 4-bolt Flange | Code 62 6,000 psi (41,370kPa) | 359 | 162 |
| 1900-2300B | Main Hoist | 125<br>106 | 475<br>403 | 500<br>3,000 | 3,447<br>20,685 | 2,100<br>1,850 | CW | 1.5 | SAE 4-bolt Flange | Code 62 6,000 psi (41,370kPa) | 515 | 237 |
| 1500-1900-2300B | Boom Hoist | 125<br>106 | 475<br>403 | 500<br>3,000 | 3,447<br>20,685 | 2,100<br>1,850 | CW | 1.5 | SAE 4-bolt Flange | Code 62 6,000 psi (41,370kPa) | 515 | 237 |
| 1500-1900-2300B | Auxiliary Hoist | 125<br>106 | 475<br>403 | 500<br>3,000 | 3,447<br>20,685 | 2,100<br>1,850 | CW | 1.5 | SAE 4-bolt Flange | Code 62 6,000 psi (41,370kPa) | 515 | 237 |
| 1500-1900-2300B | Swing (Using B200's) | 28<br>24 | 106<br>91 | 500<br>3,000 | 3,447<br>20,685 | 2,100<br>1,850 | CCW | 1.0 | SAE 4-bolt Flange | Code 62 6,000 psi (41,370kPa) | 118 | 53 |
| 1500-1900-2300B | Swing (Using G030's) | 38<br>33 | 144<br>133 | 500<br>3,000 | 3,447<br>20,685 | 2,100<br>1,850 | CCW | 1.0 | SAE 4-bolt Flange | Code 62 6,000 psi (41,370kPa) | 135 | 61 |
| 1500-1900 2300B | Swing (Using S.V.T.'s) | 49<br>42 | 186<br>160 | 500<br>3,000 | 3,447<br>20,685 | 2,100<br>1,850 | CCW | 1.0 | SAE 4-bolt Flange | Code 62 6,000 psi (41,370kPa) | 173 | 78 |
| All T/G | Precharge W/O Piggyback | 120 | 456 | 200 | 1,379 | 2,100 | CCW | 1.5 | SAE 4-bolt Flange | Code 61 3,000 psi (20,685kPa) | 46 | 21 |
| All T/G | Precharge W/Cessna | 120 | 456 | 200 | 1,379 | 2,100 | CCW | 1.5 | SAE 4-bolt Flange | Code 61 3,000 psi (20,685kPa) | 48 | 22 |
| All T/G | Precharge W/Vickers | 120 | 456 | 200 | 1,379 | 2,100 | CCW | 1.5 | SAE 4-bolt Flange | Code 61 3,000 psi (20,685kPa) | 47 | 21 |

(1) RPM listed above is in respect to shaft RPM of pump--not pump drive or engine. If measuring pump flow on machine, take into consideration RPM at which pump is being driven. Pump GPM is directly related to RPM.
(2) Shaft rotation as viewed from shaft end.
(3) For flow meter adaptor part numbers that will fit pump port(s), refer to FMC flow meter booklet or FMC diagnostic flow meter kit 3J8335.

Note: To change kPa's to bars, move the decimal point two places to the left. For example, 3,447 kPa is 34 bar.

9

Chart 4
Pump Flow Specifications - Tower/Gantry With Charge Filtration

| Machine Model | Function | GPM | LPM | PSI | kPa | (1) Shaft RPM | (2) Rot. | (3) Pressure Port Size | Descr. | SAE Rating | Estimated Weight Lbs. | Kg. |
|---|---|---|---|---|---|---|---|---|---|---|---|---|
| 1500 | Main Hoist | 91<br>77 | 346<br>293 | 500<br>3,000 | 3,447<br>20,685 | 2,100<br>1,850 | CW | 1.5 | SAE 4-bolt Flange | Code 62 6,000 psi (41,370kPa) | 359 | 162 |
| 1900-2300B | Main Hoist | 125<br>106 | 475<br>403 | 500<br>3,000 | 3,447<br>20,685 | 2,100<br>1,850 | CW | 1.5 | SAE 4-bolt Flange | Code 62 6,000 psi (41,370kPa) | 515 | 237 |
| 1500-1900-2300B | Boom Hoist | 125<br>106 | 475<br>403 | 500<br>3,000 | 3,447<br>20,685 | 2,100<br>1,850 | CW | 1.5 | SAE 4-bolt Flange | Code 62 6,000 psi (41,370kPa) | 515 | 237 |
| 1500-1900-2300B | Auxiliary Hoist | 125<br>106 | 475<br>403 | 500<br>3,000 | 3,447<br>20,685 | 2,100<br>1,850 | CW | 1.5 | SAE 4-bolt Flange | Code 62 6,000 psi (41,370kPa) | 515 | 237 |
| 1500-1900-2300B | Swing (Using G030's) | 38<br>33 | 144<br>133 | 500<br>3,000 | 3,447<br>20,685 | 2,100<br>1,850 | CCW | 1.0 | SAE 4-bolt Flange | Code 62 6,000 psi (41,370kPa) | 135 | 61 |
| 1500-1900-2300B | Swing (Using S.V.T.'s) | 49<br>42 | 186<br>160 | 500<br>3,000 | 3,447<br>20,685 | 2,100<br>1,850 | CCW | 1.0 | SAE 4-bolt Flange | Code 62 6,000 psi (41,370kPa) | 173 | 78 |

(1) RPM listed above is in respect to shaft RPM of pump--not pump drive or engine. If measuring pump flow on machine, take into consideration RPM at which pump is being driven. Pump GPM is directly related to RPM.
(2) Shaft rotation as viewed from shaft end.
(3) For flow meter adaptor part numbers that will fit pump port(s), refer to FMC flow meter booklet or FMC diagnostic flow meter kit 3J8335.

Note: To change kPa's to bars, move the decimal point two places to the left. For example, 3,447 kPa is 34 bar.

Chart 5 - Engine Specifications

| Engine Manufacturer And Model Number | High Idle, RPM | Full Load Speed, RPM | B.H.P@ F.L.S. | Crankcase Capacity Gal. | L. | Fuel Tank Capacity | Gal. | L. | Cooling System Capacity Gal. | L. |
|---|---|---|---|---|---|---|---|---|---|---|
| Cummins KT1150-C450 | 2,050 | 1,850 | 428 | 10 | 38 | Front Tank:<br>Rear Tank: | 403.8<br>388.5 | 1,534.4<br>1,476.3 | 32 | 121 |
| Cummins KT1150-C600 | 2,000 | 1,800 | 555 | 10 | 38 | | 792.3 | 3,010.7 | 32 | 121 |
| Detroit Diesel 12V71-T | 2,050 | 1,850 | 493 | 9.5 | 36 | Front Tank:<br>Rear Tank: | 403.8<br>388.5 | 1,534.4<br>1,476.3 | 31 | 117 |
| 12V71-N | 2,050 | 1,850 | 416 | 9.5 | 36 | | 792.3 | 3,010.7 | 31 | 117 |

Chart 6
Lubrication Capacity Chart, TG1500-1900

| Upper Location | Capacity (Approximate) |
|---|---|
| Engine Crank Case | |
| Detroit Diesel, 12V71-T | 9.5 Gal. (36 Liters) |
| Cummins, KT1150-C600 | 10 Gal. (38 Liters) |
| Detroit Diesel, 12V71-N | 9.5 Gal. (36 Liters) |
| Cummins, KT1150-C450 | 10 Gal. (38 Liters) |
| Cooling System | |
| Detroit Diesel, 12V71-T | 31 Gal. (117 Liters) |
| Cummins, KT1150-C600 | 32 Gal. (121 Liters) |
| Detroit Diesel, 12V71-N | 31 Gal. (117 Liters) |
| Cummins, KT1150-C450 | 32 Gal. (121 Liters) |
| Pump Drive Gearbox (Upper) | 2.5 Gal. (9 Liters) |
| SVT Swing Planetary | 2.8 Gal. (11 Liters) |
| Traveling Gantry Gearbox | 4.5 Qts. (4.27 Liters) |
| Hydraulic System | 190 Gal. (719 Liters) |
| Hydraulic Reservoir (Upper) | 120 Gal. (454 Liters) |
| Hydraulic Reservoir (Traveling Gantry) | 25 Gal. (95 Liters) |

Chart 7
Lubrication Capacity Chart, TG2300-2300B

| Upper Location | Capacity (Approximate) |
|---|---|
| Engine Crank Case | |
| Detroit Diesel, 12V71-T | 9.5 Gal. (36 Liters) |
| Cummins, KT1150-C600 | 10 Gal. (38 Liters) |
| Cooling System | |
| Detroit Diesel, 12V71-T | 31 Gal. (117 Liters) |
| Cummins, KT1150-C600 | 32 Gal. (121 Liters) |
| Pump Drive Gearbox (Upper) | 2.5 Gal. (9.5 Liters) |
| SVT Swing Planetary | 2.8 Gal. (11 Liters) |
| Swing Planetary (G030) | 2.3 Gal. (9 Liters) |
| Traveling Gantry Gearbox | 4.5 Qts. (4.27 Liters) |
| Hydraulic System | 190 Gal. (719 Liters) |
| Hydraulic Reservoir (Upper) | 120 Gal. (454 Liters) |
| Hydraulic Reservoir (Traveling Gantry) | 25 Gal. (95 Liters) |

Chart 8
Relief Valve Settings

| Circuit | Pressure Setting, psi (kPa) |
|---|---|
| Main Hoist, 58,000 Lbs. (26,309 kg) Line Pull Winch | 3,600 + 50 (24,822 + 345) |
| Main Hoist, 37,000 Lbs. (16,783 kg) Line Pull Winch | 3,000 + 50 (20,685 + 345) |
| Boom Hoist (TG1500-1900) | 3,500 + 50 (24,133 + 345) |
| Boom Hoist (TG2300B) | 3,900 + 200 (26,891 + 345) |
| Auxiliary Hoist | 3,000 + 50 (20,685 + 345) |
| Swing (TG1500-1900) | 4,000 + 200 (27,580 + 1,379) |
| Swing POR | 3,500 + 200 (24,133 + 1,379) |
| Swing (TG2300B) | 3,500 + 200 (24,133 + 1,379) |
| Swing POR | 3,000 + 200 (20,685 + 1,379) |

Chart 9
Wire Rope Requirements, TG1500-1900*

| |
|---|
| Boom Hoist Wire Rope<br>All Machines<br>6 part, 1-1/4" (31.75mm) diameter, type "DB", 575 feet (175.26m) long. (Wire rope to have a wire rope thimble and swagged sleeve installed to one end.) |
| Main Hoist Wire Rope<br>TG1500<br>1, 2, 3 or 4 part, 1-3/8" (34.925mm) diameter, type "GB".<br>Maximum drum capacity, 3rd layer 1,450 feet (441.96m).<br><br>TG1900<br>1, 2, 3 or 4 part, 1-5/8" (41.275mm) diameter, type "GB".<br>Maximum drum capacity, 3rd layer 2,142 feet (652.88m). |
| Auxiliary Hoist Wire Rope<br>All Machines<br>1 part line, 7/8" (22.23mm) diameter, type "N" or 1" (25.4mm) diameter, type "P".<br>Maximum drum capacity, 4th layer 818 feet (249.33m). |

*See Section 8, Attachment, for Wire Rope Length Requirements For Different Boom Lengths and Crane Elevations.

Chart 10
Wire Rope Requirements, TG2300-2300B*

| |
|---|
| Boom Hoist Wire Rope<br>All Machines<br>6 part, 1-1/4" (31.75mm) diameter, type "DB", 575 feet (175.26m) long. (Wire rope to have a wire rope thimble and swagged sleeve installed to one end.) |
| Main Hoist Wire Rope<br>TG2300<br>1, 2, 3 or 4 part, 1-5/8" (41.275mm) diameter, type "GB".<br>Maximum drum capacity, 3rd layer 1,233 feet (375.82m).<br><br>TG2300B<br>1, 2, 3 or 4 part, 1-5/8" (41.275mm) diameter, type "GB".<br>Maximum drum capacity, 3rd layer 1,233 feet (375.82m).<br>Optional main drum capacity, 5th layer 2,142 feet (652.88m). |
| Auxiliary Hoist Wire Rope<br>All Machines<br>1 part line, 7/8" (22.23mm) diameter, type "N" or 1" (25.4mm) diameter, type "P".<br>Maximum drum capacity, 4th layer 818 feet (249.33m). |

*See Section 8, Attachment, for Wire Rope Length Requirements For Different Boom Lengths and Crane Elevations.

# REFERENCE 8. ISO STANDARD

# INTERNATIONAL STANDARD

# ISO 4406

Second edition
1999-12-01

## Hydraulic fluid power — Fluids — Method for coding the level of contamination by solid particles

*Transmissions hydrauliques — Fluides — Méthode de codification du niveau de pollution particulaire solide*

Reference number
ISO 4406:1999(E)

© ISO 1999

**PDF disclaimer**

This PDF file may contain embedded typefaces. In accordance with Adobe's licensing policy, this file may be printed or viewed but shall not be edited unless the typefaces which are embedded are licensed to and installed on the computer performing the editing. In downloading this file, parties accept therein the responsibility of not infringing Adobe's licensing policy. The ISO Central Secretariat accepts no liability in this area.

Adobe is a trademark of Adobe Systems Incorporated.

Details of the software products used to create this PDF file can be found in the General Info relative to the file; the PDF-creation parameters were optimized for printing. Every care has been taken to ensure that the file is suitable for use by ISO member bodies. In the unlikely event that a problem relating to it is found, please inform the Central Secretariat at the address given below.

© ISO 1999

All rights reserved. Unless otherwise specified, no part of this publication may be reproduced or utilized in any form or by any means, electronic or mechanical, including photocopying and microfilm, without permission in writing from either ISO at the address below or ISO's member body in the country of the requester.

ISO copyright office
Case postale 56 • CH-1211 Geneva 20
Tel. + 41 22 749 01 11
Fax + 41 22 734 10 79
E-mail copyright@iso.ch
Web www.iso.ch

Printed in Switzerland



© ISO 1999 – All rights reserved

## Foreword

ISO (the International Organization for Standardization) is a worldwide federation of national standards bodies (ISO member bodies). The work of preparing International Standards is normally carried out through ISO technical committees. Each member body interested in a subject for which a technical committee has been established has the right to be represented on that committee. International organizations, governmental and non-governmental, in liaison with ISO, also take part in the work. ISO collaborates closely with the International Electrotechnical Commission (IEC) on all matters of electrotechnical standardization.

International Standards are drafted in accordance with the rules given in the ISO/IEC Directives, Part 3.

Draft International Standards adopted by the technical committees are circulated to the member bodies for voting. Publication as an International Standard requires approval by at least 75 % of the member bodies casting a vote.

International Standard ISO 4406 was prepared by Technical Committee ISO/TC 131, *Fluid power systems*, Subcommittee SC 6, *Contamination control and hydraulic fluids*.

This second edition cancels and replaces the first edition (ISO 4406:1987), which has been technically revised. The new edition introduces a three-part code for contamination levels measured with automatic particle counters calibrated in accordance with ISO 11171. It also introduces equivalent particle sizes for such counters, based on calibration with NIST standard reference material SRM 2806.

The particle sizes to be reported for measurement by using a microscope, $\geqslant 5$ µm and $\geqslant 15$ µm, are unchanged from those specified in ISO 4406:1987.

Defining the automatic particle counter code sizes in this way validates direct comparison of measurements made in accordance with this standard using either measurement method, or between such measurements and data records based on ISO 4406:1987.

Annex A forms a normative part of this International Standard.

© ISO 1999 – All rights reserved

## Introduction

In hydraulic fluid power systems, power is transmitted and controlled through a liquid under pressure within an enclosed circuit. Solid-particle contaminant is always present in the hydraulic fluid, and the amount needs to be determined because the contaminant may cause serious problems.


© ISO 1999 – All rights reserved

# Hydraulic fluid power — Fluids — Method for coding the level of contamination by solid particles

## 1 Scope

This International Standard specifies the code to be used in defining the quantity of solid particles in the fluid used in a given hydraulic fluid power system.

## 2 Normative references

The following normative documents contain provisions which, through reference in this text, constitute provisions of this International Standard. For dated references, subsequent amendments to, or revisions of, any of these publications do not apply. However, parties to agreements based on this International Standard are encouraged to investigate the possibility of applying the most recent editions of the normative documents indicated below. For undated references, the latest edition of the normative document referred to applies. Members of ISO and IEC maintain registers of currently valid International Standards.

ISO 4407:1991, *Hydraulic fluid power — Fluid contamination — Determination of particulate contamination by the counting method using a microscope.*

ISO 11171:1999, *Hydraulic fluid power — Calibration of automatic particle counters for liquids.*

ISO 11500:1997, *Hydraulic fluid power — Determination of particulate contamination by automatic counting using the light extinction principle.*

## 3 Code definition

### 3.1 General

The purpose of this code is to simplify the reporting of particle count data by converting the numbers of particles into broad classes or codes, where an increase in one code is generally a doubling of the contamination level.

The original code in accordance with ISO 4406:1987 stated the reporting at two sizes, ⩾5 µm and ⩾15 µm, but the sizes in this revision have been changed to account for the use of a different calibration standard for optical automatic particle counters. The reported sizes are ⩾4 µm(c), ⩾6 µm(c) and ⩾14 µm(c), the last two of these being equivalent to the 5 µm and 15 µm particle sizes obtained using the ISO 4402:1991 method of calibrating automatic particle counters. ISO 4402:1991 has been replaced by ISO 11171:1999. Throughout this International Standard, the use of µm(c) means that particle size measurements are carried out using an automatic particle counter which has been calibrated in accordance with ISO 11171.

Measurement of particles using an optical microscope as specified in ISO 4407:1991 establishes the size of a particle as being equal to its longest dimension, whereas an automatic particle counter derives the size of an equivalent particle from its cross-sectional area, a value different in most cases from that determined using a microscope. The particle sizes to be reported for measurement by microscope, ⩾5 µm and ⩾15 µm, are unchanged from those specified in ISO 4406:1987.

© ISO 1999 – All rights reserved

**CAUTION — Particle counts are affected by a variety of factors. These factors include procurement of sample, particle counting accuracy, and the sample container, where used, and its cleanliness. Proper care should be taken during sample procurement to ensure that the sample obtained is representative of the fluid circulation in the system.**

## 3.2 Basis of code

The code for contamination levels using automatic particle counters comprises three scale numbers, which permit the differentiation of the dimension and the distribution of the particles as follows:

— the first scale number represents the number of particles equal to or larger than 4 µm(c) per millilitre of fluid;

— the second scale number represents the number of particles equal to or larger than 6 µm(c) per millilitre of fluid;

— the third scale number represents the number of particles equal to or larger than 14 µm(c) per millilitre of fluid.

The code for microscope counting comprises two scale numbers using 5 µm and 15 µm.

## 3.3 Allocation of scale numbers

**3.3.1** The scale numbers are allocated according to the number of particles counted per millilitre of the fluid sample (see Table 1).

**3.3.2** A step ratio of generally two, as given between the upper and lower limits for the number of particles per millilitre in Table 1, has been adopted to keep the number of scale numbers within a reasonable limit and to ensure that each step is meaningful.

## 3.4 Determination of code using automatic particle counter analysis

**3.4.1** Counting shall be undertaken in accordance with ISO 11500 or another recognised method, using an automatic particle counter calibrated to ISO 11171.

**3.4.2** A scale number shall be allocated to the number of particles equal to or larger than 4 µm(c).

**3.4.3** A second scale number shall be allocated to the number of particles equal to or larger than 6 µm(c).

**3.4.4** A third scale number shall be allocated to the number of particles equal to or larger than 14 µm(c).

**3.4.5** The three numbers shall be written one after the other and separated by oblique strokes (slashes).

EXAMPLE A code of 22/18/13 signifies that there are more than 20 000 and up to and including 40 000 particles equal to or larger than 4 µm(c), more than 1 300 and up to and including 2 500 particles equal to or larger than 6 µm(c) and more than 40 and up to and including 80 particles equal to or larger than 14 µm(c) in 1 ml of a given fluid sample.

**3.4.6** When applicable, include either a "*" (too numerous to count) or a "—" (no requirement to count) notation when reporting the scale number.

EXAMPLE 1 */19/14 means that this sample has too many particles equal to or larger than 4 µm(c) to count.

EXAMPLE 2 —/19/14 means that there was no requirement to count particles equal to or larger than 4 µm(c).



© ISO 1999 – All rights reserved

**Table 1 — Allocation of scale numbers**

| Number of particles per millilitre | | Scale number |
|---|---|---|
| More than | Up to and including | |
| 2 500 000 | | >28 |
| 1 300 000 | 2 500 000 | 28 |
| 640 000 | 1 300 000 | 27 |
| 320 000 | 640 000 | 26 |
| 160 000 | 320 000 | 25 |
| 80 000 | 160 000 | 24 |
| 40 000 | 80 000 | 23 |
| 20 000 | 40 000 | 22 |
| 10 000 | 20 000 | 21 |
| 5 000 | 10 000 | 20 |
| 2 500 | 5 000 | 19 |
| 1 300 | 2 500 | 18 |
| 640 | 1 300 | 17 |
| 320 | 640 | 16 |
| 160 | 320 | 15 |
| 80 | 160 | 14 |
| 40 | 80 | 13 |
| 20 | 40 | 12 |
| 10 | 20 | 11 |
| 5 | 10 | 10 |
| 2,5 | 5 | 9 |
| 1,3 | 2,5 | 8 |
| 0,64 | 1,3 | 7 |
| 0,32 | 0,64 | 6 |
| 0,16 | 0,32 | 5 |
| 0,08 | 0,16 | 4 |
| 0,04 | 0,08 | 3 |
| 0,02 | 0,04 | 2 |
| 0,01 | 0,02 | 1 |
| 0,00 | 0,01 | 0 |

NOTE Reproducibility below scale number 8 is affected by the actual number of particles counted in the fluid sample. Raw counts should be more than 20 particles. If this is not possible, then refer to 3.4.7.

**3.4.7** When the raw data in one of the size ranges results in a particle count of fewer than 20 particles, the scale number for that size range shall be labelled with the symbol ⩾.

EXAMPLE A code of 14/12/⩾7 signifies that there are more than 80 and up to and including 160 particles equal to or larger than 4 µm(c) per millilitre and more than 20 and up to and including 40 particles equal to or larger than 6 µm(c) per millilitre. The third part of the code, ⩾7, indicates that there are more than 0,64 and up to and including 1,3 particles equal to or larger than 14 µm(c) per millilitre, but less than 20 particles were counted, which lowers statistical confidence. Because of this lower confidence, the 14 µm(c) part of the code could actually be higher than 7, indicating a particle count more than 1,3 particles per millilitre.

© ISO 1999 – All rights reserved

### 3.5 Determination of code using microscope sizing

**3.5.1** Counting shall be undertaken in accordance with ISO 4407.

**3.5.2** A scale number shall be allocated to the number of particles equal to or larger than 5 µm.

**3.5.3** A second scale number shall be allocated to the number of particles equal to or larger than 15 µm.

**3.5.4** In order to relate to counts obtained with an automatic particle counter, the code shall be stated in three-part form with the first part given as a "—", e.g. —/18/13.

## 4 Identification statement (reference to this International Standard)

Use the following statement in test reports, catalogues and sales literature when electing to comply with this International Standard:

"Solid contaminant code conforms to ISO 4406:1999, *Hydraulic fluid power — Fluids — Method for coding the level of contamination by solid particles.*"



© ISO 1999 – All rights reserved

# Annex A
(normative)

## Graphical presentation of the code number

For automatic particle counter analysis, the contaminant code is determined by allocating a first scale number to the total number of particles equal to or larger than 4 µm(c), allocating a second scale number to the total number of particles equal to or larger than 6 µm(c) and allocating a third scale number to the total number of particles equal to or larger than 14 µm(c), and then writing these three numbers one after another separated by oblique strokes (slashes). For an example, see 22/18/13 in Figure A.1. For analysis by microscope, use a "—" in place of the first scale number and allocate the second and third numbers based on the counts at 5 µm and 15 µm, respectively.

Interpolation is acceptable, extrapolation is not permissible.

© ISO 1999 – All rights reserved

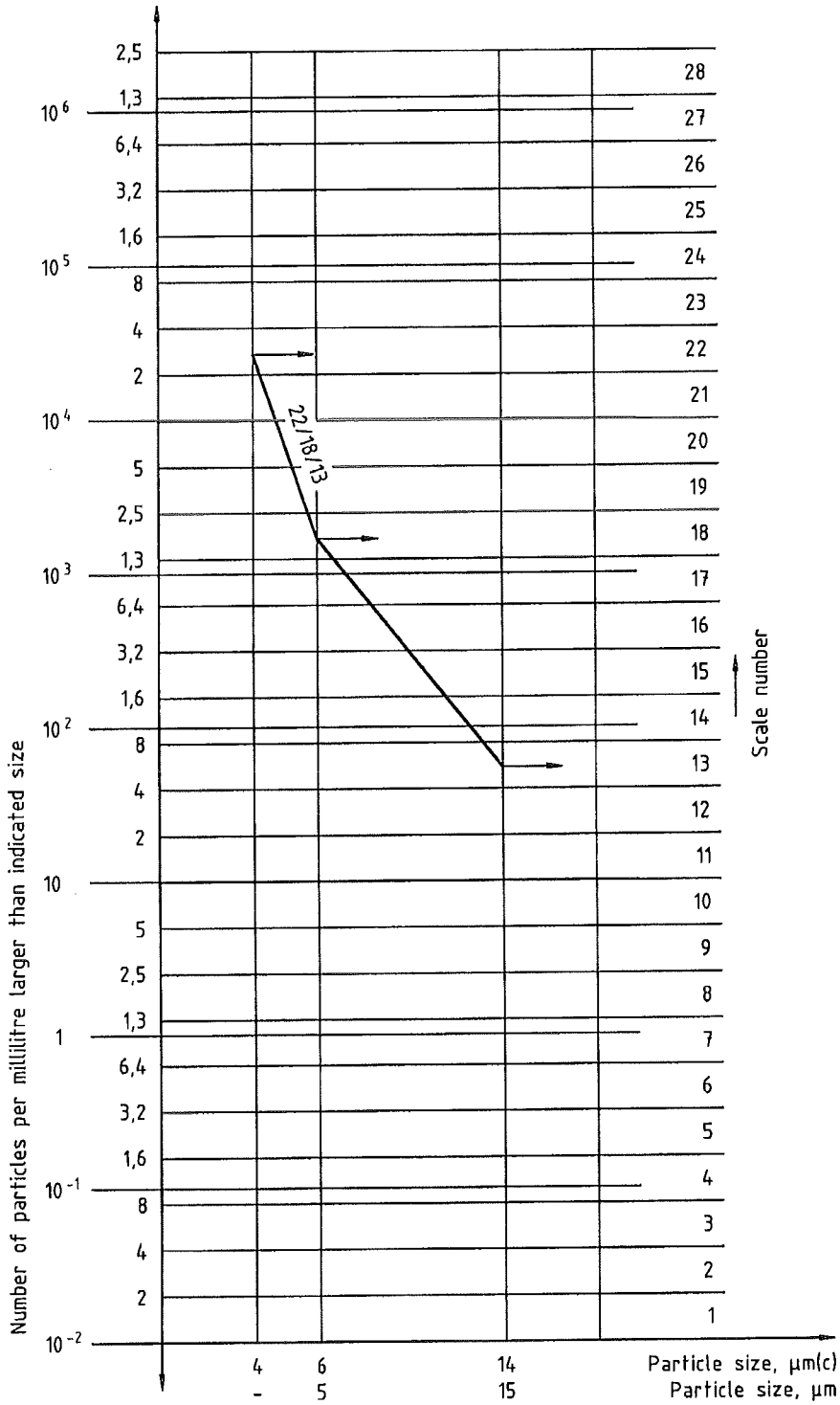


NOTE Quote scale number at 4 µm(c), 6 µm(c) and 14 µm(c) levels for automatic particle counters, and at 5 µm and 15 µm for microscope counting.

**Figure A.1**



© ISO 1999 – All rights reserved

# Bibliography

[1] ISO 4021:1992, *Hydraulic fluid power — Particulate contamination analysis — Extraction of fluid samples from lines of an operating system.*

© ISO 1999 – All rights reserved

ICS 23.100.60; 75.120
Price based on 7 pages

© ISO 1999 – All rights reserved

Recommendation on 4/9/12

Filters

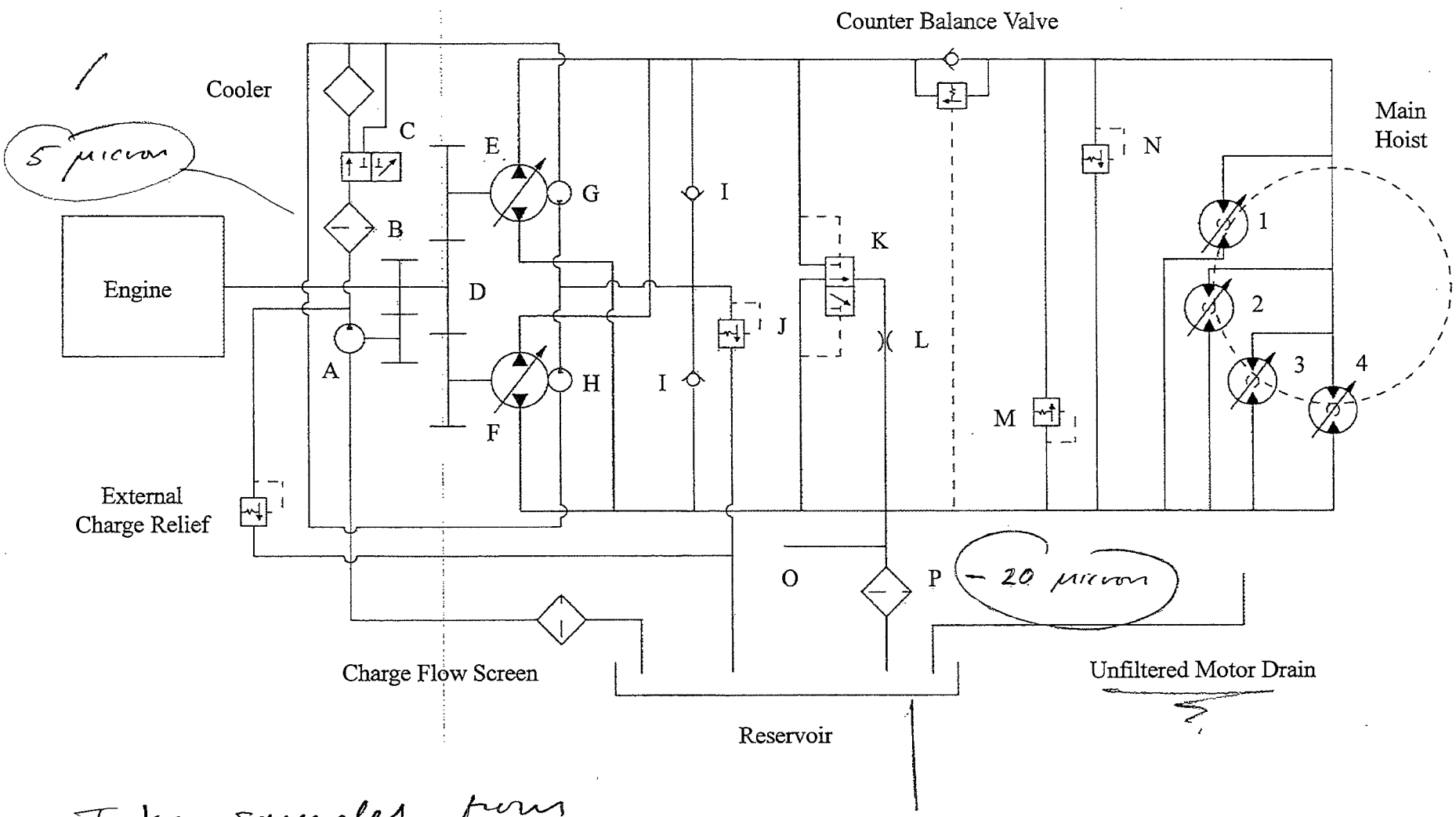


Take samples from the bottom

+ measure from bottom

Questions

1. Conrod shoes-noted as trashed in CD 3450(Oct. failure) and in good condition in CD 3705(Feb. lost load) –does this need additional testing?

   NO ... THIS FAILURE WAS DUE TO OVERSPEED

2. Sample of oil from tank. Should this be taken in the middle of the tank? There is sediment [AND WATER] on the bottom. Should the test be taken on the bottom or take a sample in both locations?

   TAKE THE OIL SAMPLES FROM THE BOTTOM OF THE TANK

# CORNELL & COMPANY

April 4, 2012

VIA ELECTRONIC MAIL – (*mjacobs@panynj.gov*)

The Port Authority of NY & NJ

Attn: Maureen Lynch Jacobs/Resident Chief Engineer –Crane Operations

Re: RFI – Cornell Tower Gantry Cranes

Good Afternoon Maureen:

Thank you for your email and all of your time and interest in Cornell & Company, Inc. I would like to offer the following comments on each of the four (4) request items:

1) Change Oil In Jumping Frame Cylinders:

   This can be done without too much trouble, however, we request that you consider taking samples of the hydraulic fluid in the cylinders and sending it out for analysis. You can change or not change, depending upon the results. The sampling of existing fluid is the method we currently use.

2) Pressure Check the Cylinders with a Check Valve:

   Prior to shipment, we perform the following test in our yard. We extend the cylinders all the way and build up pressure all the way to relief pressure. Then, we retract the cylinder all the way and do the same check. The unit is then closely checked for leaks under pressure.

3) New Hydraulic Motor Request:

   We have some of the motors in stock and are ordering additional ones.

4) Micron Filter Ratings:

   Our current filters are rated as follows:

   - Main Filter Rating: 6 Micron
   - Jacking (Jumping) Filter Rating: 10 Micron
   - Charge Pump Filter Rating: 20 Micron — 60 µm
   - Return Lines from Hoist Motors Filters Rating: 40 Micron — no filter

   Our request is that you review these filter ratings for approval. We would have to consider back pressure considerations and other negative effects of the requested 5-Micron filter level.

5) Our oil AW# is 46 for our Kawasaki motors.

P.O. BOX 807 • WOODBURY, NJ 08096
TELEPHONE 856-742-1900 • FACSIMILE 856-742-8186
www.cornellcraneandsteel.com



*"A Certified W.B.E. Firm and Equal Opportunity Employer"*

Upon receipt and review of this information, please call or email with questions or comments of any kind.

Sincerely,

CORNELL & COMPANY, INC.

Donald Garrahan
Equipment Manager

DG/kmf

cc: Jim Keane – (*jkeane@panynj.gov*)
John Kelly – (*jkelly@helmarksteel.com*)
Dominic D'Antonio – *(dominic@helmarksteel.com)*
Delor Cornell
Otto Schatz

P.O. BOX 807 • WOODBURY, NJ 08096
TELEPHONE 856-742-1900 • FACSIMILE 856-742-8186
www.cornellcraneandsteel.com



*"A Certified W.B.E. Firm and Equal Opportunity Employer"*

## Manring, Noah D.

**From:** Chris Hoffbeck [Chris.Hoffbeck@kpm-usa.com]
**Sent:** Wednesday, April 04, 2012 9:20 AM
**To:** Manring, Noah D.
**Cc:** jkeane@panynj.gov
**Subject:** Fw: Kawasaki Staffa Motor

Hi Noah,

Below you will see the comments from the engineering manager responsible for Staffa motor design at our factory in the UK.
KPM would agree with the conclusion of your findings that the poor quality of the fluid played a major contributing factor in the motor failure and the resulting unfortunate loss of control of the load.

As a general rule, Kawasaki does not recommend or endorse any particular supplier of hydraulic fluid. However, we do recommend use of mineral based anti-wear (AW) hydraulic fluids

Below are two examples of AW type hydraulic oil. Either may work, depending upon the minimum, maximum and normal operating oil temperatures.
(See notes below regarding operating recommendations related to fluid viscosity)

| AW68 Viscosity index of 95 | fluid operating temperature |
|---|---|
| 25 cSt (minimum viscosity) | 66 deg. C |
| 50 cSt (optimum viscosity) | 46 deg. C |
| 150 cSt (max on load viscosity) | 26 deg C |
| 2000 cSt (max no load viscosity) | -8 deg C |

| AW46 Viscosity index of 95 | |
|---|---|
| 25 cSt (minimum viscosity) | 58 deg. C |
| 50 cSt (optimum viscosity) | 38 deg. C |
| 150 cSt (max on load viscosity) | 19 deg C |
| 2000 cSt (max no load viscosity) | -12 deg C |

There are some premium hydraulic fluids on the market with a higher viscosity index, the Mobil DTE15M and DTE16M are examples of fluids with a viscosity index of 140.
A high viscosity index allows for a larger operating temperature range, lower viscosity at low temps and higher viscosity at the high temps.

You may be best served by contacting a supplier of premium anti wear mineral based hydraulic fluids, such as Exxon Mobil for their recommendation and most current product information.

Please let me know if I may be of further assistance.

Chris Hoffbeck
Engineering Supervisor
Kawasaki Precision Machinery USA
3838 Broadmoor Avenue SE
Grand Rapids, MI 49512
www.kpm-usa.com
chris.hoffbeck@kpm-usa.com
616-975-3108
----- Forwarded by Chris Hoffbeck/Kmc-Usa on 04/03/2012 02:56 PM -----

From: iscott@kpm-uk.co.uk
To: Chris Hoffbeck <Chris.Hoffbeck@kpm-usa.com>
Cc: wdark@kpm-uk.co.uk, mdavies@kpm-uk.co.uk

Date: 04/03/2012 04:27 AM
Subject: Re: Fw: Kawasaki Staffa Motor

---

Hi Chris,

I'd make the following comments with reference to our bulletin extract...

1. The maximum operating temperature is 80degC, but for optimum life it is recommended to operate well below this temperature.
2. The optimum viscosity is 50cSt and the minimum is 25cSt therefore if the system temperature is high then a fluid with a high VI would be required.
3. A fluid water content of 1000ppm (0.1%) in my opinion is too high and should be below 500ppm (0.05%). This should be discussed with the fluid supplier and they should be able to tell you the water saturation point of their oil.
4. The TAN level of the oil should be monitored. This will give the acidity content of the oil and hence give its useful life.
5. Cleanliness recommendation as below 18/14 or better (5 and 15 micron shown)

Motors Industrial Pro

**Circuit and Application Notes (continued)**

**Mineral Oil recommendations**
The fluid should be a good hydraulic grade, non-detergent Mineral Oil. It should contain anti-oxidant, a foam and demulsifying additives. It should contain antiwear or EP additives. Automatic transmission fl and motor oils are not recommended.

**Temperature limits**

| | |
|---|---|
| Ambient min. | -30°C (-22°F) |
| Ambient max. | + 70°C (158°F) |
| Max. operating temperature range. | |
| Mineral Oil | Water- containing |
| Min -20°C (-4°F) | +10°C (50°F) |
| Max. + 80°C (175°F) | +54°C (130°F) |

Note: To obtain optimum services life from both fluid and hydraulic systems components, a fluid operating temperature of 40°C is recommended.

**Filtration**
Full flow filtration ( open circuit ), or full boost flow filtration ( close circuit ) to ensure system cleanlines ISO4406/1986 code 18/14 or cleaner.

**Hydraulic Fluids**

Dependent on motor (see Ordering Code.) suitable fluids include:

(a) Antiwear hydraulic oils.
(b) Phosphate ester (HFD fluids )
(c) Water glycols ( HFC fluids)
(d) 60/40% water-in-oil emulsions ( HFB fluids).
(e) 5/95% oil-in-water emulsions (HFA fluids)

Reduce pressure and speed limits, see page 6.
Viscosity limits when using any fluid except oil-in-water (5/95) emulsions are;

| | |
|---|---|
| Max. off load | 2000cSt (9270 SUS) |
| Max. on load | 150 cSt (695 SUS) |
| Optimum | 50 cSt (232 SUS) |
| Minimum | 25cSt (119 SUS) |

Regards,

Ian

**Engineering Manager**

Tel: +44 1752 322340
Fax: +44 1752 364816
Web: http://www.kpm-eu.com
E-Mail: Iscott@kpm-uk.co.uk

Kawasaki Precision Machinery (UK) Ltd.
Ernesettle lane,
Ernesettle,
Plymouth,
Devon
PL5 2SA

Save a tree...please don't print this e-mail unless you really need to
The information transmitted is intended only for the person or entity to which it is addressed and may contain confidential and/or privileged material.
Any review, retransmission, dissemination or other use of, or taking of any action in reliance upon, this information by persons other than the intended recipient is prohibited.
If you receive this in error, please contact the sender and delete the material from any computer.
The view and/or opinions of individuals expressed within this document do not necessarily reflect the views of the company.

----- Forwarded by Chris Hoffbeck/Kmc-Usa on 04/02/2012 04:28 PM -----

From: "Manring, Noah D." <manringn@missouri.edu>
To: "'Chris Hoffbeck'" <chris.hoffbeck@kpm-usa.com>
Cc: "'Keane, Jim'" <jkeane@panynj.gov>, "Lynch-Jacobs, Maureen" <mjacobs@panynj.gov>, 'Delia Shumway' <dshumway@buildings.nyc.gov>
Date: 04/02/2012 03:58 PM
Subject: RE: Kawasaki Staffa Motor

---

Dear Chris:

I am attaching my notes on the fluid condition for the 2nd crane failure. I will be including these comments in my report for the Port Authority (to be written tomorrow), but it would be helpful to have you look at these thoughts and either confirm, augment, or deny any of the conclusions as they specifically apply to the Staffa motors.

Thanks for your help, Noah

Noah D. Manring
Glen A. Barton Professor
Interim Chairman, Electrical and Computer Engineering
University of Missouri
Columbia, MO 65211
ManringN@missouri.edu
573-884-5484

*"A Proud Tradition, Engineering the Future!"*

-----Original Appointment-----
**From:** Keane, Jim [mailto:jkeane@panynj.gov]
**Sent:** Monday, April 02, 2012 2:10 PM
**To:** Manring, Noah D.; Lynch-Jacobs, Maureen; 'Delia Shumway'; 'Chris Hoffbeck'
**Subject:** Updated: Kawasaki Staffa Motor
**When:** Monday, April 02, 2012 2:30 PM-3:00 PM (UTC-06:00) Central Time (US & Canada).
**Where:** Conference call 212 435 8228

This email has been scanned by the Symantec Email Security.cloud service.
For more information please visit http://www.symanteccloud.com

[attachment "Fluid Condition Assessment (Manring 2012.04.02).pdf" deleted by Chris Hoffbeck/Kmc-Usa]

# REFERENCE 9. MAXIMUM PAYLOAD RECOMMENDATIONS

# RECOMMENDATION FOR THE MAXIMUM CRANE PAYLOAD FOR CRANES OPERATING AT THE WORLD TRADE CENTER JOB SITE

March 17, 2012

Noah Manring, Ph.D., P.E.

## Executive Summary

Sometime in February of this year, one of the standard crane systems at the World Trade Center building site underwent a catastrophic failure where a 48,000 lbf payload was suddenly dropped from the elevation of the 48th floor of Tower 4. A similar failure was experience on another crane at the same job site in late 2011. Since these accidents have occurred, various failure scenarios have been studied with the most probable cause of failure now pointing toward a seized distributor in one of the hydraulic motors. This document is being written to answer the following question: Until we resolve the apparent reoccurring problem of seizing a distributor in one of the motors, what is a safe payload for the existing cranes to lift on the job site? Based upon the analysis and design configuration of the last crane failure, it is recommended that the payload for the crane be limited to 30,000 lbf until the question of motor-distributor seizure is answered. This payload limitation will provide a safety factor of nearly 1.40 for a system that loses one motor due to distributor seizure, and will provide a safety factor of nearly 1.00 for a system that loses two motors due to distributor seizure. Once the cause of distributor seizure is fully understood and remedied, the maximum payload for this system may be increased to a comfortable value above 40,000 lbf based upon the desired payload and safety factor shown the chart of Figure 2.

Nomenclature

$M$ total number of active motors exerting torque on the hoist drum

$N_g$ number of teeth on the ring gear of the hoist drum

$N_p$ number of teeth on the pinion that is driven by a hydraulic motor

$n_f$ factor of safety

$P_c$ fluid pressure on the low-pressure side of the hydraulic circuit ("charge pressure")

$P_s$ fluid pressure on the high-pressure side of the hydraulic circuit

$R$ radius of the cable departure point from the center of the hoist drum

$T_m$ ideal torque capacity for a single motor

$T_M$ total torque exerted on the hoist drum by all active motors

$V_D$ volumetric displacement per revolution for a single motor

$W$ crane payload

$\eta$ torque efficiency of the hoist system (including the motors)

Background

The crane hoist system shown in Figure 1 has been used to construct Tower 4 of the World Trade Center. Sometime in February, this crane system underwent a catastrophic failure where a 48,000 lbf payload was suddenly dropped from the elevation of the 48$^{th}$ floor of the tower.

Since the failure, various hypotheses have been proposed and tested to determine the cause of failure. Among these hypotheses is the mode of failure where at least one motor

undergoes the seizing of a distributor; thus, effectively disabling the motor from the lift circuit and reducing the load capacity of the crane. This hypothesis is supported by the fact that the coupling key between the motor shaft and the distributor was broken on all four motors of the crane that failed, and that a similar accident in 2011 discovered a broken coupling key in one of the motors used in that crane. Furthermore, a mathematical model of the crane lifting circuit has been built using Matlab / Simulink ® and this model reveals that a seized distributor in one motor would have been sufficient to drop the payload as was experienced during the actual accident. Other failure hypotheses have been tested in the numerical model as well, but none of these have shown probable cause for the accident. Therefore, the hypothesis of a seized distributor being the initial cause of the accident remains in the forefront of this investigation.

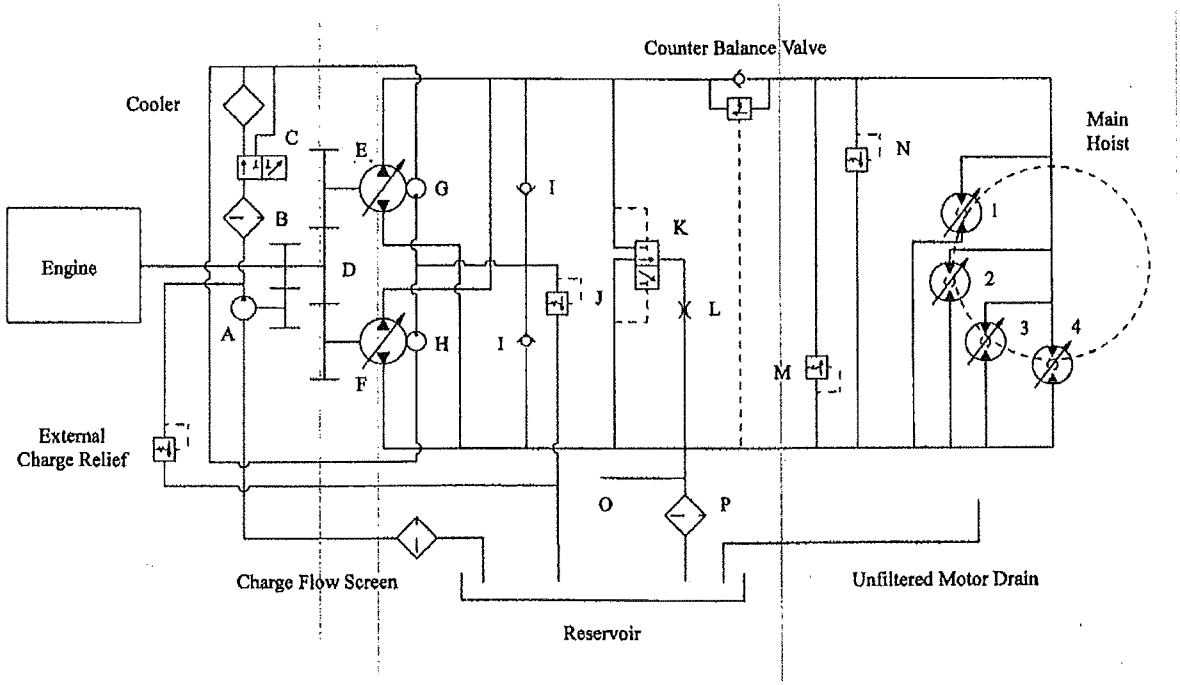


Figure 1. Crane hoist system, showing four motors for lifting the payload

Assuming that the seized distributor (disablement of a motor) is the cause of failure, the question to be answered is as follows: Until we resolve the apparent reoccurring problem of seizing a distributor in one of the motors, what is a safe payload for the existing cranes to lift on the job site? This question is answered based upon the analysis that follows, while utilizing geometry and design parameters that are used on the crane hoist system shown in Figure 1.

Analysis

In this section, a mathematical expression for the payload capacity of the crane will be derived. The ideal torque capacity for a single hydraulic motor is given by [1]:

$$T_m = \frac{V_D}{2\pi}(P_s - P_c) \quad , \tag{1}$$

Where $V_D$ is the volumetric displacement of the motor per revolution, $P_s$ is the pressure of the fluid on this high-pressure side of the motor, and $P_c$ is the pressure of the fluid on the low-pressure side of the motor (typically called "charge pressure"). For the crane with $M$ number of motors, the total amount of torque exerted on the drum of the lift hoist is

$$T_M = M\frac{V_D}{2\pi}(P_s - P_c)\,\eta\,\frac{N_g}{N_p} \tag{2}$$

where $\eta$ is the torque efficiency of the hoist system, $N_g$ is the number of teeth on the hoist ring gear, and $N_p$ is the number of teeth on a single pinion that is driven by a motor. The load carrying capacity of the crane is given by

$$W = \frac{T_M}{R\,n_f} \tag{3}$$

where $R$ is the instantaneous radius of the cable departure point from the drum, relative to the

center of the drum, and $n_f$ is the safety factor being applied to the calculation.

## Results and Discussion

To generate results from the preceding analysis, the following design characteristics for the hoist system were used:

| Description | Symbol | Value | Units |
|---|---|---|---|
| Number of gear teeth | $N_g$ | 238 | no units |
| Number of pinion teeth | $N_p$ | 19 | no units |
| Charge pressure | $P_c$ | 300 | psi |
| Supply pressure | $P_s$ | 3000 | psi |
| Drum radius | $R$ | 30 | in |
| Volumetric displacement | $V_D$ | 90 | $in^3$ / rev |
| Torque efficiency | $\eta$ | 0.85 | no units |

Using these parameters, the graph in Figure 2 was produced from Equation (3) to describe the recommended payload for the crane versus a desired safety factor for the lift. Note: a safety factor of 1.00 provides no margin for error. Usually, a safety factor between 1.00 and 2.00 is used for a safe design practice. In Figure 2, the graph is plotted for the number of motors that are active. The purple line represents a working condition where all four motors are active, the green line represents a condition where only three motors are active, the red line represents a condition where only two motors are active, etc. As Figure 2 shows, the recommended load carrying capacity for the crane decreases as the desired safety factor increases for all working conditions.

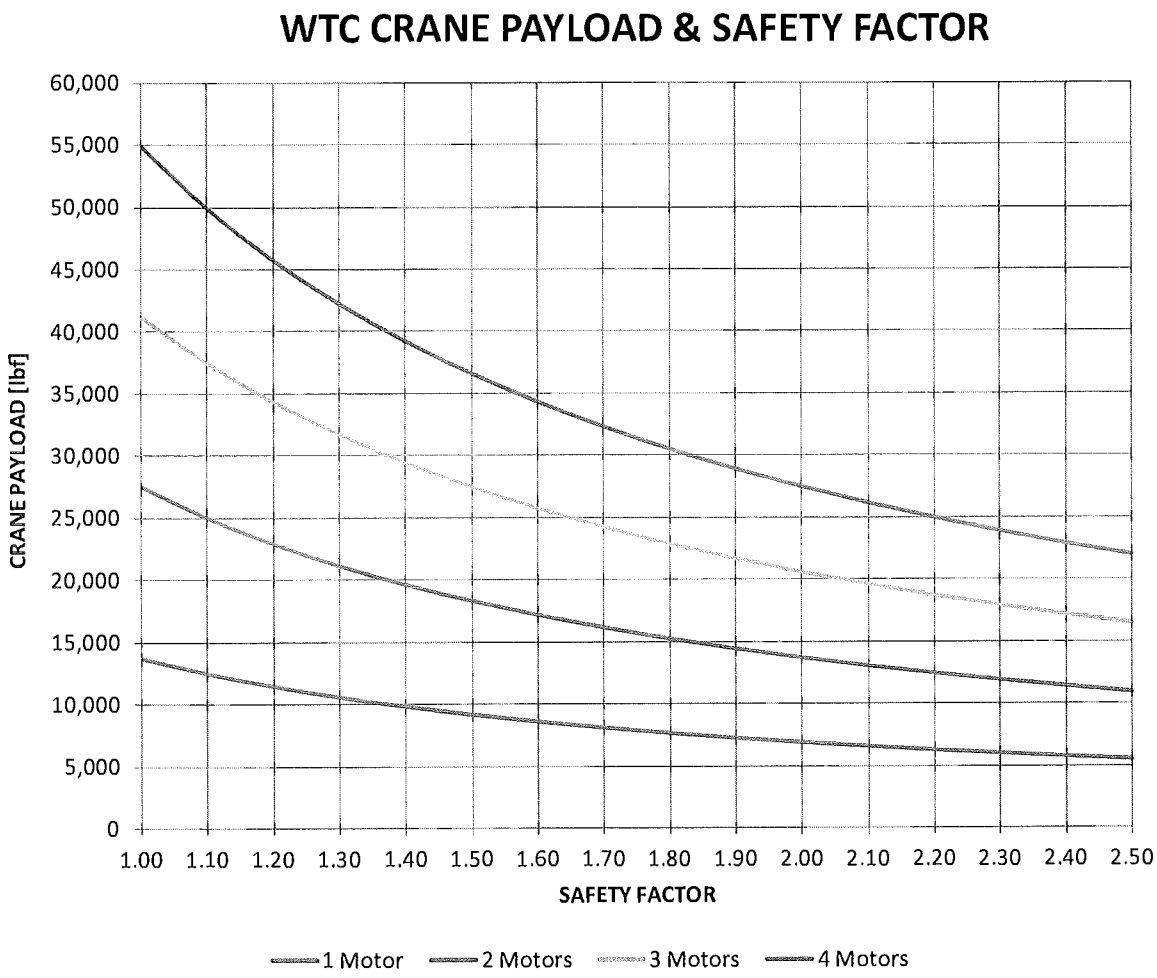


Figure 2. Payload capacity versus factor of safety and number of operating motors

Conclusion and Recommendations

Based upon the analysis and the design parameters that were used to generate the graph in Figure 2, <u>it recommended that the payload for the crane be limited to 30,000 lbf until the question of motor-distributor seizure is answered</u>. This payload limitation will provide a safety factor of nearly 1.40 for a system that loses one motor due to distributor seizure, and will provide a safety factor of nearly 1.00 for a system that loses two motors due to distributor seizure. Once the cause of distributor seizure is fully understood and remedied, the maximum payload for this

system may be increased to a comfortable value above 40,000 lbf based upon the desired payload and safety factor shown the chart of Figure 2.

Normally, the crane will operate with 4 active motors. The recommendation of limiting the payload to 30,000 lbf will allow the crane to safely lift the payload using only 3 active motors. Under this scenario, it is even likely that 2 active motors will be able to hold the payload; however, if three motors are lost, a payload of 30,000 lbf will certainly drop due to the lack of torque being generated by only one motor. The recommendation to limit the load carrying capacity to the ability of two motors is offered while considering the following:

1. That it is unlikely to have multiple distributors seize simultaneously, and
2. That the seizing of one distributor should be made apparent to the crane operator as the motor with a seized distributor should be making erratic noise, thus giving the operator time to stop the hoist function and to seek corrective action.

While it is true that the recent crane failure showed multiple seizures of motor distributors (all four motors had broken coupling keys), several of these seizures were most likely secondary failures due to over speed conditions that resulted in many broken parts throughout the machine.

References

[1] Manring, N.D. 2005. Hydraulic Control Systems. John Wiley & Sons. New York.

**From:** Manring, Noah D.
**To:** "Delia Shumway"
**Cc:** "Keane, Jim"; "Lynch-Jacobs, Maureen"
**Subject:** RE: Payload recommendation (accounting for cables) ...
**Date:** Friday, March 23, 2012 4:07:20 PM

---

Dear Delia:

The payload should be reduced by the following force calculation ...

F = (7 lbf/ft) x (lift height in ft) x (number of lines)

For example, if you are doing a 700 ft lift, with one line, the maximum recommended payload of 30,000 should be reduced by

F = (7 lbf/ft) x (700 ft) x (1) = 4,900 lbf

W = 30,000 lbf − 4,900 lbf = 25,100 lbf

If two lines are being used to lift the load for the same height ...

F = (7 lbf/ft) x (700 ft) x (2) = 9,800 lbf

W = 30,000 lbf − 9,800 lbf = 20,200 lbf

I hope this helps. I will be traveling Monday and Tuesday of next week, and may be difficult to reach. I will check my iPhone as often as possible and respond when I can.

Best wishes, Noah

P.S. Tom Kanzler called me today to inform me that hoist system on the T2300B is identical to the one on the T1900 crane. In other words, my recommendation for the maximum payload on these two cranes would be the same. I have received the ISO recommendation for fluid filtration for the motors and will look at that soon. It seems someone at the Staffa motors shop should be looking into the seizure problem. I can help as much as possible, but it is really their design that needs to be protected.

Noah D. Manring
Glen A. Barton Professor
Interim Chairman, Electrical and Computer Engineering
University of Missouri
Columbia, MO 65211
ManringN@missouri.edu
573-884-5484

*"A Proud Tradition, Engineering the Future!"*

**From:** Delia Shumway [mailto:dshumway@buildings.nyc.gov]
**Sent:** Friday, March 23, 2012 2:51 PM
**To:** Lynch-Jacobs, Maureen; Manring, Noah D.
**Cc:** Keane, Jim
**Subject:** RE: Payload recommendation ...

Height of the lifts will vary but the line pull will be the same. Wire rope. You can assume 1 5/8" diameter. We would like to know what the threshold load would be for 2 parts of line. I believe that it is a linear relationship because the line pull remains unchanged. So, my assumption would be that the maximum capacity for the 2 part line would be approximately 60,000 lbs.
Thank you,
Delia

**Delia Shumway, P.E.**
Executive Director
Cranes & Derricks Division
NYC Department of Buildings
280 Broadway, 5th Floor
New York, NY 10007
T: 212.566.4754 | F: 212.566.5871
dshumway@buildings.nyc.gov

**From:** Lynch-Jacobs, Maureen [mailto:mjacobs@panynj.gov]
**Sent:** Friday, March 23, 2012 10:59 AM
**To:** Delia Shumway
**Cc:** Keane, Jim
**Subject:** RE: Payload recommendation ...

Delia,
Dr. Manring has noted the additional information required for additional parts of line.
I will be out of the office. If you need additional information, Noah will be available until noon (manringn@missouri.edu). Just keep Jim Keane in the loop.
Thanks
Maureen

**From:** Manring, Noah D. [mailto:manringn@missouri.edu]
**Sent:** Friday, March 23, 2012 10:13 AM
**To:** Lynch-Jacobs, Maureen
**Subject:** RE: Payload recommendation ...

Dear Maureen:

To add this to the safety factor, I will need to know the following things ...

1. The height of each lift,
2. The diameter of the cable (assuming all lines are the same diameter)
3. The number of cables being used for the lift

My assumption is that the cables are steel.

Thanks, Noah

Noah D. Manring
Glen A. Barton Professor
Interim Chairman, Electrical and Computer Engineering
University of Missouri
Columbia, MO 65211
ManringN@missouri.edu
573-884-5484

*"A Proud Tradition, Engineering the Future!"*

---

**From:** Lynch-Jacobs, Maureen [mailto:mjacobs@panynj.gov]
**Sent:** Friday, March 23, 2012 9:07 AM
**To:** Manring, Noah D.
**Subject:** RE: Payload recommendation ...

When you reeve the wire through the block a more than one time to increase the pick capacity.
Number of lines of rope supporting the load block

---

**From:** Manring, Noah D. [mailto:manringn@missouri.edu]
**Sent:** Friday, March 23, 2012 9:57 AM
**To:** Lynch-Jacobs, Maureen
**Subject:** RE: Payload recommendation ...

Dear Maureen:

I do not know what Delia is asking when she refers to "multiple parts of line". If that can be made clear to me, I can probably answer her question.

Thanks, Noah

Noah D. Manring
Glen A. Barton Professor
Interim Chairman, Electrical and Computer Engineering
University of Missouri
Columbia, MO 65211
ManringN@missouri.edu
573-884-5484

*"A Proud Tradition, Engineering the Future!"*

---

**From:** Lynch-Jacobs, Maureen [mailto:mjacobs@panynj.gov]
**Sent:** Friday, March 23, 2012 8:52 AM
**To:** Manring, Noah D.
**Cc:** Keane, Jim
**Subject:** FW: Payload recommendation ...

Noah,

Can you answer this request from Delia?

The report bases the payload capacity on a single part of line being used. Given that the line pull remains unchanged with added parts of line, please confirm that we can apply the same reduction factor (45% of maximum capacity) to multiple parts of line and still stay within the safety factors indicated in the report? If so, can the report be amended to include this?

I will notify Jim, you are available for a conference call from now till noon EST and see when Jim is available.

Maureen

---

**From:** Lynch-Jacobs, Maureen
**Sent:** Friday, March 23, 2012 9:35 AM
**To:** 'Manring, Noah D.'
**Subject:** FW: Payload recommendation ...

Noah

Are you available for a conference call?

---

**From:** Delia Shumway [mailto:dshumway@buildings.nyc.gov]
**Sent:** Friday, March 23, 2012 9:29 AM
**To:** Keane, Jim; Michael Alacha; Konca.Mitchel@dol.gov; Crane.John@dol.gov
**Cc:** Lynch-Jacobs, Maureen; Reiss, Alan
**Subject:** Re: Payload recommendation ...

Jim/Maureen,

Has Dr. Manring responded to my comment asking for clarification on capacity limits for multiple parts of line?

Thanks,

Delia

Delia Shumway, P.E.
Executive Director
Cranes & Derricks
NYC Department of Buildings
280 Broadway, 5th Floor
New York, NY
dshumway@buildings.nyc.gov

---

**From**: Delia Shumway
**Sent**: Monday, March 19, 2012 10:31 AM
**To**: 'Keane, Jim' <jkeane@panynj.gov>; Michael Alacha; 'Konca.Mitchel@dol.gov' <Konca.Mitchel@dol.gov>; 'Crane.John@dol.gov' <Crane.John@dol.gov>
**Cc**: 'Lynch-Jacobs, Maureen' <mjacobs@panynj.gov>; 'Reiss, Alan' <areiss@panynj.gov>
**Subject**: RE: Payload recommendation ...

Jim,

Thank you for the report. A couple of comments...

The report bases the payload capacity on a single part of line being used. Given that the line pull remains unchanged with added parts of line, please confirm that we can apply the same reduction factor (45% of maximum capacity) to multiple parts of line and still stay within the safety factors indicated in the report? If so, can the report be amended to include this?

The report assumes specific pressure settings. If the pressure settings need to be adjusted in order to meet these requirements, that may not be possible given what we saw in PA trying to change the setting on the valve. I recommend having the settings checked on the cranes and adjusted to meet the these requirements. If they cannot be adjusted, then additional recommendations will be required.

Thanks,
Delia

**Delia Shumway, P.E.**
Executive Director
Cranes & Derricks Division
NYC Department of Buildings
280 Broadway, 5th Floor
New York, NY 10007
T: 212.566.4754 | F: 212.566.5871
dshumway@buildings.nyc.gov

---

**From:** Keane, Jim [mailto:jkeane@panynj.gov]
**Sent:** Saturday, March 17, 2012 2:07 PM
**To:** Delia Shumway; Michael Alacha; 'Konca.Mitchel@dol.gov'; 'Crane.John@dol.gov'
**Cc:** Lynch-Jacobs, Maureen; Keane, Jim; Reiss, Alan
**Subject:** Fw: Payload recommendation ...

FYI

---

Sent from Jim Keane's BlackBerry Wireless Handheld
The Port Authority of NY and NJ - Look what we're doing
90+ Years of Investing in the Region
www.panynj.gov
www.wtcprogress.com

---

**From**: Manring, Noah D. [mailto:manringn@missouri.edu]
**Sent**: Saturday, March 17, 2012 01:41 PM
**To**: Keane, Jim; Lynch-Jacobs, Maureen
**Subject**: Payload recommendation ...

Dear Jim and Maureen:

I am sending you my recommendation for limiting the payload on the WTC cranes to 30,000 pounds until we resolve the distributor seizure problem. The attached document justifies this recommendation.

I hope you have a nice weekend, Noah

Noah D. Manring
Glen A. Barton Professor
Interim Chairman, Electrical and Computer Engineering
University of Missouri
Columbia, MO 65211
ManringN@missouri.edu
573-884-5484

*"A Proud Tradition, Engineering the Future!"*

NOTICE: THIS E-MAIL AND ANY ATTACHMENTS CONTAIN INFORMATION FROM THE PORT AUTHORITY OF NEW YORK AND NEW JERSEY AND AFFILIATES. IF YOU BELIEVE YOU HAVE RECEIVED THIS E-MAIL IN ERROR, PLEASE NOTIFY THE SENDER IMMEDIATELY, PERMANENTLY DELETE THIS E-MAIL (ALONG WITH ANY ATTACHMENTS), AND DESTROY ANY PRINTOUTS.

Attachment D

PELLOW
ENGINEERING SERVICES, INC.

DONALD L. PELLOW

# CRANE INCIDENT AT WORLD TRADE CENTER

# TOWER #4

# LINKBELT 1900 CRANE

# DATE OF ACCIDENT - FEBRUARY 16, 2012

# WIRE ROPE FAILURE ANALYSIS

DONALD L. PELLOW – P.E.

PELLOW ENGINEERING SERVICES, INC.

SEPTEMBER, 2012



12615 BRIAR DRIVE • LEAWOOD, KS 66209 • TEL/FAX 913 • 663 • 0133
WWW.DONPELLOW.COM • DPELLOW@AOL.COM

# CRANE INCIDENT AT WORLD TRADE CENTER – TOWER #4

# LINKBELT 1900 CRANE

# DATE OF ACCIDENT - FEBRUARY 16, 2012

# WIRE ROPE FAILURE ANALYSIS

# SEPTEMBER, 2012

## INTRODUCTION

On February 16, 2012, a Linkbelt 1900 crane positioned at the top of the World Trade Center was being employed to lift and lower loads at the construction site of the World Trade Center, Tower #4. At the time of the incident, the crane was lifting a 48,185 pound steel member from ground level to be placed at an elevated location. When this load reached approximately the 48th floor, this 48,185 pound load began to "free-fall", still being attached to the 1 5/8"wire rope hoist line. The load fell uncontrollably at a high rate of speed until it struck the ground, crushing a delivery truck.

As this 48,185 pound load fell to the ground, the wire rope on the hoist drum continued to unspool from the drum at a high rate of speed from the freely spinning drive drum. Ultimately the entire length wire rope unreeled off the drive drum and began to momentarily "back-wind" in the opposite direction on the drum. The high impact force of the falling wire rope and 48,185 pound load, along with the extremely high moment of inertia of the spinning drum, caused the wire rope to shear off at the connection point on the drum.

This broken wire rope hoist line became highly entangled and damaged from de-reeving through the sheaves and impact against the ground. Because the wire rope did break during this entire incident, a wire rope failure analysis was conducted. Due to the intricately entangled wire rope condition subsequent to its breakage, it could not be rewound onto a reel for removal from the job site. It was therefore cut into multiple lengths and placed into a steel dumpster container.

This container of wire rope sections cut from the hoist line, along with the draw works of the crane hoisting system, was then transferred to a warehouse complex in Bayonne, New Jersey, for inspection, measurements, photographing and selection of samples for laboratory testing.

During the inspection of the drive drum at a second warehouse measurements were taken of the drum and photographs taken of the shearing location of the wire rope at the connection point on the drum (Photographs #1 & #2). Photograph #1 depicts the interior side of the drum flange where the wire rope was sheared during impact. The leading edge of the opening into the flange through which the wire rope passes for connection to the outer side of the flange is sharp and has been bent backwards from the high impact of the wire rope during shearing. Photograph #2 shows the exterior opening in the flange through which the wire rope passes for connection to the exterior surface of the flange. The clamps compressing the wire rope onto the outside of the flange of the drum were removed (Photograph #3) and the short 2' length of wire rope remaining on the drum was removed for inspection (Photographs #4 & #5). Photograph #4 shows the tail end of the wire rope that was inserted into the clamps, while photograph #5 depicts the failure end of the wire rope section still attached to the drum.

## FINDINGS

Attachment "A" lists the 92 individual lengths of wire rope retrieved from the container for inspection, with the total accumulated length of 1169 feet. The diameter measurements taken were in undisturbed areas of these samples and are noted adjacent to the length measurements. The range of wire rope diameter measurement is consistent, varying from 1.706" to 1.711", with an average of 1.709". The wire rope invoice from Metro Wire Rope to DCM Erectors (Attachment "B") lists the nominal diameter of this Casar Starlift Millennium wire rope, which supposedly was on the crane at the time of the accident, as 1 5/8" (1.625"). The acceptable manufacturing tolerance of a new, unused 1 5/8"wire rope is -0, + 5% (1.625" – 1.706"). The oversize diameter measurements greater than 1.706"may likely be from recoil and loosening of the outer strands during this incident.

Wire rope lay lengths were taken on approximately six different samples that appeared to be unaltered by twisting, kinking, bending or other damage. The range of lay lengths is 10 1/16" to 10 1/8", which is very consistent among these wire rope samples.

Visual inspection, length and diameter measurements, videotaping and photographing of the multiple lengths of 1 5/8" wire rope and the drive drum hoisting system were conducted on April 3, 2012 at the Bayonne, New Jersey warehouse, Photographs #6 - #9 reflect the typical conditions of the wire rope sections cut and removed from the steel container. These photographs reveal the typical types of damage observed on these wire rope sections. They are comprised of bends, doglegs, kinks, "curling" and recoiling of the wire rope caused from de-reeving and abrasion of the wire rope within the system of sheaves and ultimately breaking from a high impact force at the clamp and pocket on the drive drum.

The length of wire rope containing the end of the failure off of the drive drum is 10'-5" long with the failure end shown in Photograph #10. This failure end of the wire rope reveals that all 16 outer strands broke at the first set of clamps at the connection point on the drum (Photograph #3). The IWRC, or core of this wire rope, broke away from this location at approximately the very end of the wire rope positioned within the drum clamps (Photograph #4).

Information provided by the NYNJ Port Authority establishes the distance from ground level to the base of the crane as 1119 feet. The approximate distance from the base of the crane to the point sheave is 15 feet and the boom length is stated as 170 feet. Therefore the total length of wire rope extending from contact point on the drum to ground level is approximately 1304 feet. There was a total of 92 individual cut lengths of wire rope removed from the container, ranging in length from 2' to 23' (Attachment A). The accumulative length of the samples recovered for examination is 1169 feet (excluding the short 2 ft. length retained within the drum pocket). So it appears that about 135 feet of wire rope is unaccounted for in the system. In addition, the invoice from Metro Wire Rope to DCM Erectors indicates a length of 1500 feet was shipped on this order of wire rope for this crane.

Examination in the warehouse of the 92 wire rope sections shows no signs of manufacturing defects or indication of wire quality problems. All of the damage to the 92 sections of wire rope, with the exception of the fractured end, appears to have been caused subsequent to the wire rope being sheared at the entrance to the drive drum and de-reeving back through the sheaves and impact against the ground.

## EXAMINATION & ANALYSIS AT LUCIUS PITKIN LABORATORIES

On April 4, 2012, the 10'-5" length of wire rope containing one end of the failure was removed from the warehouse inspection site, along with the short 2' sample containing the other end of the break (Photograph #11). These were then transferred to the laboratories of Lucius Pitkin for failure analysis. A close-up view of the tail end of the wire rope that was located still attached to the drum shows that the IWRC of the wire rope broke at the "knot" formed at the very end of the wire rope (Photograph #12). Inspection of this "knot" placed into the wire rope end reveals that the wire rope had been heated and twisted at this location (Photograph #13).

Laboratory inspection confirmed that the 16 outer strands of the wire rope broke at the edge of the pocket in the drum, while the IWRC broke at the tail end of the wire rope where the "knot" had been formed.

Two additional 8' lengths of wire rope obtained from the most prime condition samples with the least amount of damage from the container were transferred to the Fritz Laboratory at Lehigh University for ultimate breaking strength tests (See Lehigh University DVD).

At the Lucius Pitkin laboratory, several lengths of wire rope representing various types of damage to the outer surfaces were removed for microscopic examination of the wires and for SEM examination for types of breaks and damages. The broken strands and wires at the fractured end of the wire rope were carefully examined. One such typical outer wire rope strand exhibits severe bending and crushing at the break location (Photograph #14). It was determined that all outer strands have broken at the same location; that is, they broke at the entrance of the wire rope into the pocket on the drum. This is the location where the wire rope would have been severely bent back on itself against the sharp edge of the drum pocket at the time the wire rope was experiencing "back winding" under extreme loading conditions (Photograph #1). Four of the outer sixteen strands exhibiting representative types of damage and breaks were removed from the broken end of the wire rope for microscopic examination and SEM analysis. Photographs of representative broken wire ends of the outer strands reveal that the wires have broken due to severe crushing and bending (Photographs #15 & #16). Viewing of broken wire ends through the stereomicroscope more easily expose crushing (Photographs #17, #18 & #19); cutting (Photographs #20 & #21); and shearing (Photographs #22, #23 & #24).

Many of the inner wires of the outer strands and the IWRC, although dramatically bent, exhibit tensile and shear type breaks. No other types of wire breaks were discovered at the fractured end of the wire rope off the drum.

Scanning Electron Microscopy (SEM) reveals severe crushing, cutting, and shearing of the outer wires at the location of the break (Photographs #25, #26, #27 & #28).

## ULTIMATE BREAKING STRENGTRH TESTS AT LEHIGH UNIVERSITY

Two 8' lengths of this 1 5/8" diameter wire rope showing the least amount of damage and wear were socketed and pulled to ultimate breaking strength (DVD video from Lehigh University). The Lehigh University report (Attachment "C") contains the actual breaking strengths obtained; comments on the loading levels when internal wire breaks began occurring during the tensile tests; and a load/elongation curve for each wire rope.

Cable #1 broke at 312,000 pounds, with internal wires starting to break at 237,000 pounds. Cable #2 broke at 309,900 pounds, with internal wires starting to break at 236,000 pounds. The nominal catalog breaking strength for a new, unused 1 5/8", 35 x 7 Compacted Strand, wire

grade is 334,000 lbs. for Grade 1960 and 364,000 lbs. for Grade 2160. Because these used wire ropes had been in service for a period of time, and had been impact or shock loaded at the time of field breakage, it is expected that the actual breaking strengths would be less than a new, unused wire rope. Also attached to this Lehigh University report are the calibration certificates for the testing equipment.

Review of the Lehigh University DVD Video clearly shows that when a wire rope is pulled to breaking strength, the wires will break mostly in a tensile mode, some shear and some a combination of tensile and shear. These breaks are greatly different that the breaks in the wires that were damaged at the pocket of the drum at the time of this incident.

**FORCE CALCULATIONS**

| | |
|---|---|
| Weight of steel member (W) | 48,185 lbs. |
| Weight of 1304 ft. of 1 5/8" 35 x 7 Compacted Strand wire rope = 7420 lbs. | |
| Distance weight falls before impact (h) | 480 ft. |
| Modulus of Elasticity of wire rope (MOE)* | 12,000,000 psi |
| Approx. cross-sectional area (A)* | 1.30 sq. in. |
| Avg. Cat. B. S. of wire rope (Grades 1960 & Grade 2160) | 349,000 lbs. |

a = Acceleration of steel member as it impacts and breaks wire rope
Approx. length of wire rope from drum to ground level = 1304 ft.
g = gravitation acceleration = 32 ft./sec. sec.
V = Velocity of steel member at time of impact against wire rope
F = Impact force of steel beam against the wire rope when it broke
e = Average elongation of wire rope at breaking strength = 3.5%
M = mass = w/g = (48,185 lbs. + 7420 lbs. ) / (32 ft./sec. sec.) = 1738 slugs
t = Approx. time for steel member to fall 480 ft.

V x V = (2) x (g) x (h) = (2) x (32) x (480) = 30,720 ft. ft. / sec.sec. V
V = 175 ft. / sec.
Avg. V during fall = (175) / (2) = 87.5 ft./sec.

t = h /Avg. V = (480) / (175) / (2) = 5.5 sec.

e = Total length of wire rope from drum to ground x 3.5% = (1304) x (.035) = 45.6 ft.

a = V x V / 2 x e = (30,720) / (2) x (45.6) = 337 ft./sec.sec.

F = M x a = (1738) x (32 + 337) = 641,322 lbs.

*Because the impact force of the steel member against the wire rope greatly exceeds the nominal catalog breaking strength, Young's Modulus of Elasticity is invalid in this analysis.

The breaking strength of a wire rope bent back upon itself, especially around the sharp edge of the pocket in the drive drum, will be decreased at least by 50% (Wire Rope Technical Board – Wire Rope Users' Manual – Attachment "D" ). So the expected maximum breaking strength of this wire rope being "back-wound" on the drum is approximately 174,500 lbs. (349,000 lbs. x .50). Therefore with the impacting force on the wire rope approximating 641,000 lbs., the wire rope easily and instantaneously broke when impacted by the weight of the falling beam.

## CONCLUSIONS

A. The wire rope broke as a result of the 48,185 steel member free falling to the ground causing an impact load on the wire rope of approximately 641,000 lbs.
B. The wire rope strength was severely compromised due to the severe bending, crushing and cutting experienced against the sharp edge of the drum pocket into which the wire rope had been terminated. The expected breaking strength of the wire rope at the location where it was being bent back on itself around the sharp edge of the drum pocket would be a maximum of 174,500 lbs.
C. No defects in the wire rope wires were discovered during the warehouse inspection of the 92 sections or during the microscopic examination and SEM analysis of the wire breaks.
D. High magnification and SEM analysis of the individual wire breaks reveal only severe crushing, bending and cutting. There is no evidence of any manufacturing defects within the wires.
E. No defects were discovered in the manufacturing of the wire rope. The lower actual breaking strengths of the used samples (312,000 lbs. & 309,900 lbs.) as tested at Lehigh University, and as compared to new, unused wire rope (334,000 lbs. for Grade 1960 or 364,000 lbs. for Grade 2160), were expected since the wire rope has been used and has been subjected to a load exceeding its residual strength at the time of breakage at the job site.
F. The initiation of wire breaks at only about 236,000 lbs. during the ultimate breaking strength tests of the used sample reflects the fact that the wire rope has been in use for a period of time and that the impact loading at the time of the field failure produced significant internal notching between the outer strand wires and the outer wires of the IWRC. That is, the initial breaking of internal wires during the ultimate strength tests of

the wire rope were due to damaged wires from use and impact loading at the time of this incident, and do not reflect a new, unused wire rope condition.

Donald. L. Pellow – P.E.
Engineering Consultant
Pellow Engineering Services, Inc.

## ATTACHMENT A

## SAMPLES OF WIRE ROPE RECOVERED FROM JOB SITE

| SAMPLE | LENGTH | DIA. | SAMPLE | LENGTH | DIA. |
|---|---|---|---|---|---|
| 1 | 11'-3" | 1.710" | 2 | 11'-6" | ---- |
| 3 | 8'-0" | ---- | 4 | 7'-0" | ---- |
| 5 | 12'-6" | 1.709" | 6 | 20'-0" | ---- |
| 7 | 23'-0" | ---- | 8 | 21'-0" | ---- |
| 9 | 8'-0" | ---- | 10 | 11'-0" | 1.706" |
| 11 | 27'-0" | ---- | 12 | 15'-0" | ---- |
| 13 | 13'-5" | ---- | 14 | 8'-0" | ---- |
| 15 | 14'-0" | ---- | 16 | 7'-8" | ---- |
| 17 | 17'-0" | ---- | 18 | 20'-0" | ---- |
| 19 | 14'-6" | ---- | 20 | 23'-0" | 1.711" |
| 21 | 12'-3" | ---- | 22 | 13'-6" | ---- |
| 23 | 10'-2" | ---- | 24 | 15'0" | ---- |
| 25 | 18'-6" | ---- | 26 | 17'-0" | ---- |
| 27 | 13'-6" | ---- | 28 | 13'-0" | ---- |
| 29 | 10'-4" | ---- | 30 | 12'-6" | ---- |
| 31 | 8'-6" | ---- | 32 | 32'-6" | ---- |
| 33 | 40'-0" | 1.710" | 34 | 21'-0" | ---- |
| 35 | 22'-0" | ---- | 36 | 12'-0" | ---- |
| 37 | 25'-0" | ---- | 38 | 17'-10" | ---- |
| 39 | 12'-0" | ---- | 40 | 9'-8" | ---- |
| 41 | 12'-8" | ---- | 42 | 15'-2" | 1.706" |
| 43 | 2'-2" | ---- | 44 | 3'-0" | ---- |
| 45 | 8'-0" | ---- | 46 | 10'-0" | ---- |
| 47 | 13'-0" | ---- | 48 | 10'-4" | ---- |
| 49 | 8'-6" | ---- | 50 | 7'-0" | ---- |
| 51 | 11'-2" | ---- | 52 | 9'-0" | ---- |
| 53 | 6'-0" | ---- | 54 | 19'-5" | 1.710" |
| 55 | 10'-0" | ---- | 56 | 10'-0" | ---- |
| 57 | 7'-4" | ---- | 58 | 6'-6" | ---- |
| 59 | 10'-6" | ---- | 60 | 7'-2" | ---- |

| | | | | | |
|---|---|---|---|---|---|
| 61 | 8′-5″ | ---- | 62 | 6′-6″ | ---- |
| 63 | 2′-4″ | ---- | 64 | 2′-6″ | ---- |
| 65 | 8′-8″ | ---- | 66 | 11′-7″ | ---- |
| 67 | 16′-6″ | 1.711″ | 68 | 17′-6″ | ---- |
| | | | | | |
| 71 | 2′-0″ | ---- | 72 | 20′-4″ | ---- |
| 73 | 11′-2″ | ---- | 74 | 17′-6″ | 1.709″ |
| 75 | 13′-0″ | ---- | 76 | 12′-0″ | ---- |
| 77 | 11′-4″ | ---- | 78 | 14′-6″ | ---- |
| 79 | 12′-6″ | ---- | 80 | 13′-6″ | ---- |
| 81 | 15′-0″ | ---- | 82 | 9′-0″ | ---- |
| 83 | 17′-8″ | 1.710″ | 84 | 8′-10″ | ---- |
| 85 | 8′-6″ | ---- | 86 | 9′-4″ | ---- |
| 87 | 9′-10″ | ---- | 88 | 13′-0″ | ---- |
| 89 | 14′-0″ | ---- | 90 | 18′-8″ | ---- |
| 91 | 16′-2″ | ---- | 92 | 10′-5″ | ---- (failure end) |

Total Approx. length of all recovered wire rope samples = 1169 ft.
Weight of 1169 ft. of 1 5/8″ = 6652 lbs. (5.69 lbs./ft.)
Average of measured wire rope diameters = 1.709″

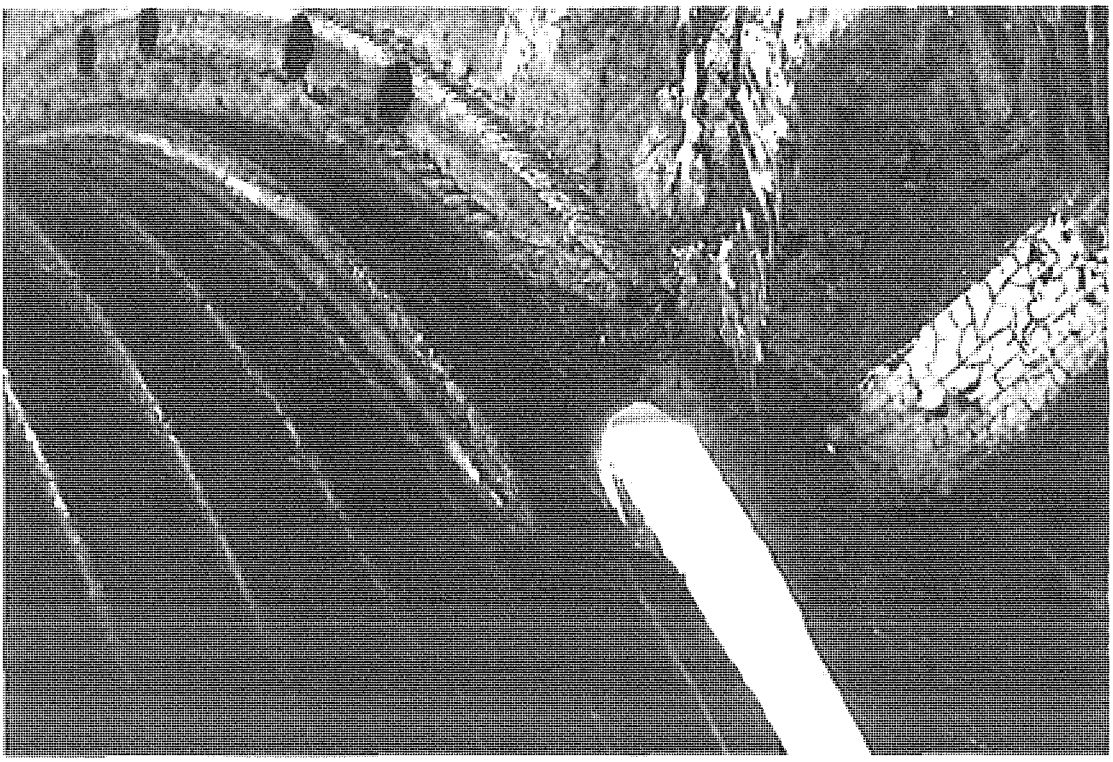

PHOTOGRAPH #1
INTERIOR VIEW OF DRUM POCKET

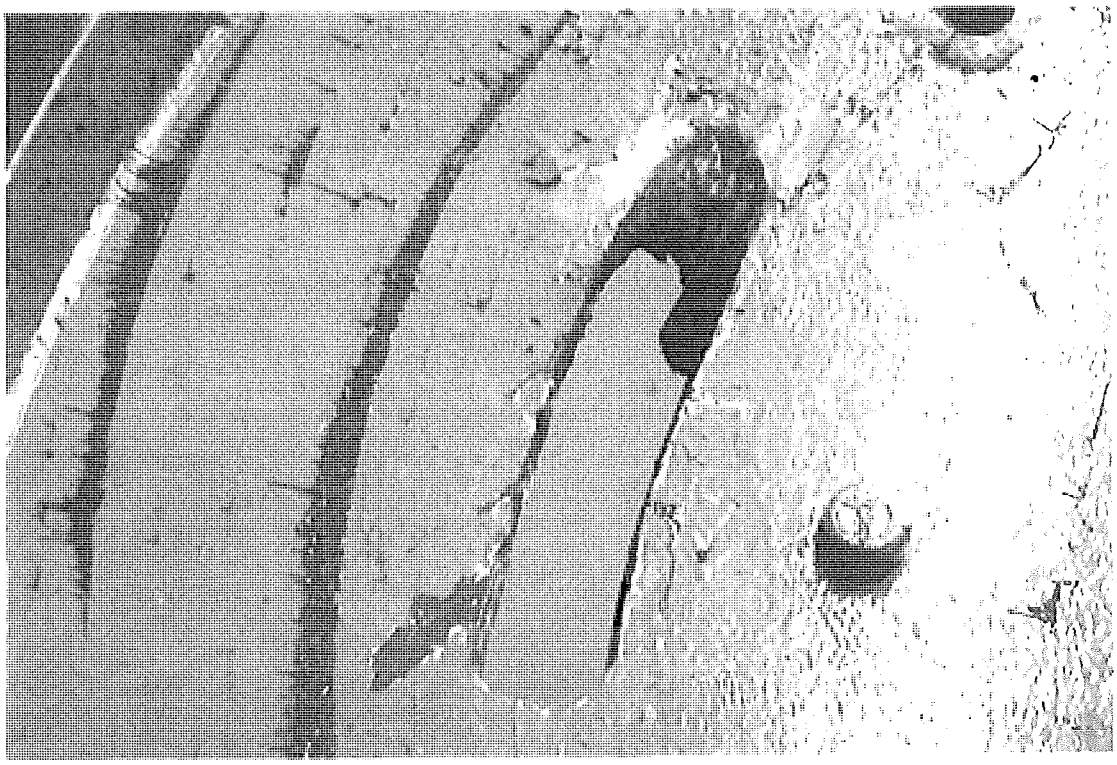

PHOTOGRAPH #2
EXTERIOR VIEW OF DRUM POCKET

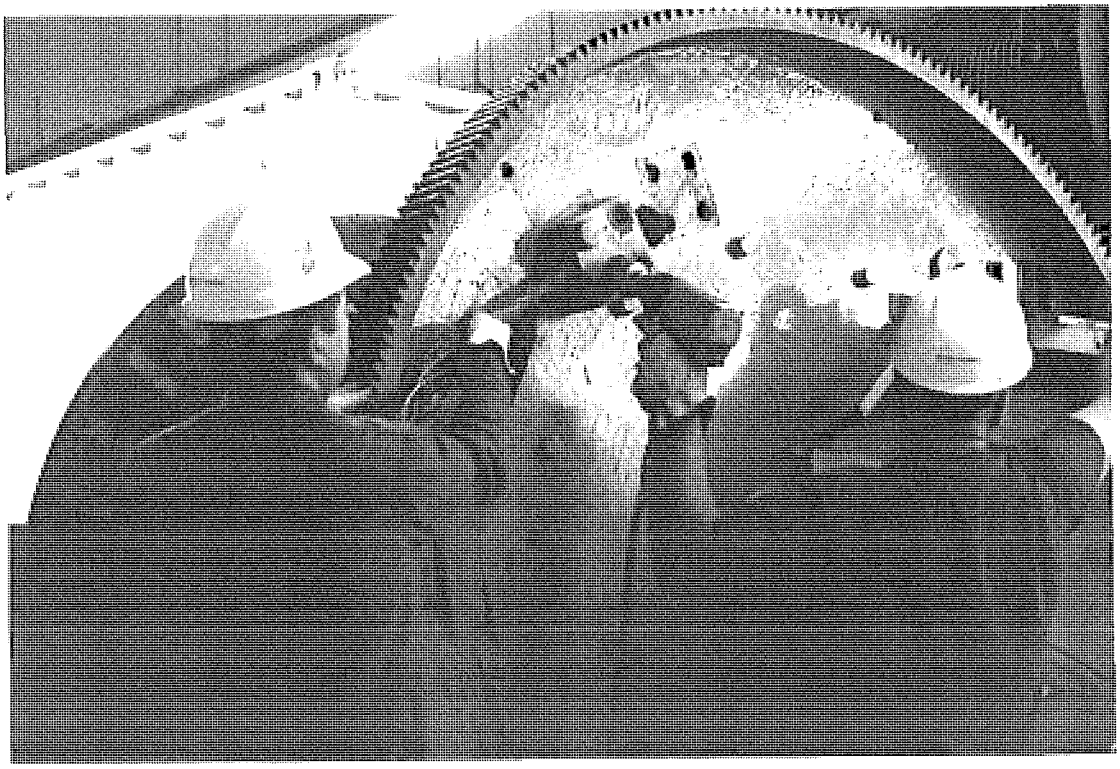

PHOTOGRAPH #3
WIRE ROPE CLAMPS BEING REMOVED FROM DRUM

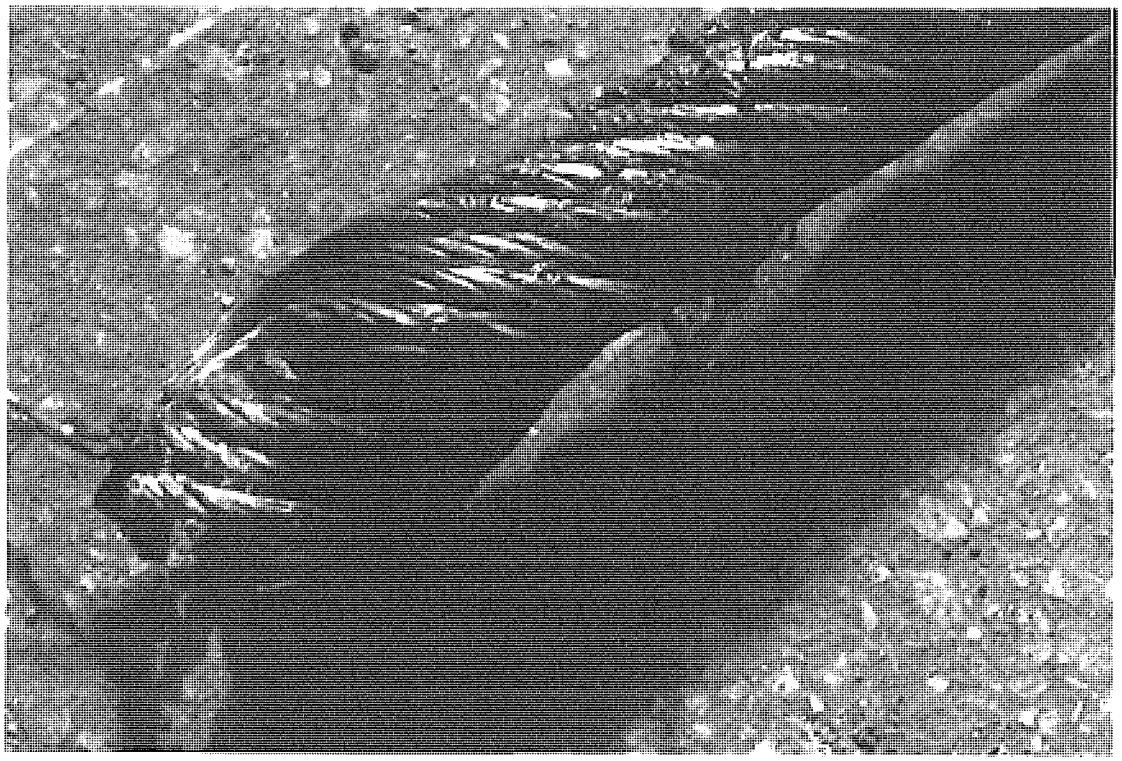

PHOTOGRAPH #4
2' LENGTH OF WIRE ROPE REMOVED FROM CLAMPS

PHOTOGRAPH #5
FRACTURED END OF 2' LENGTH OR WIRE ROPE FROM DRUM

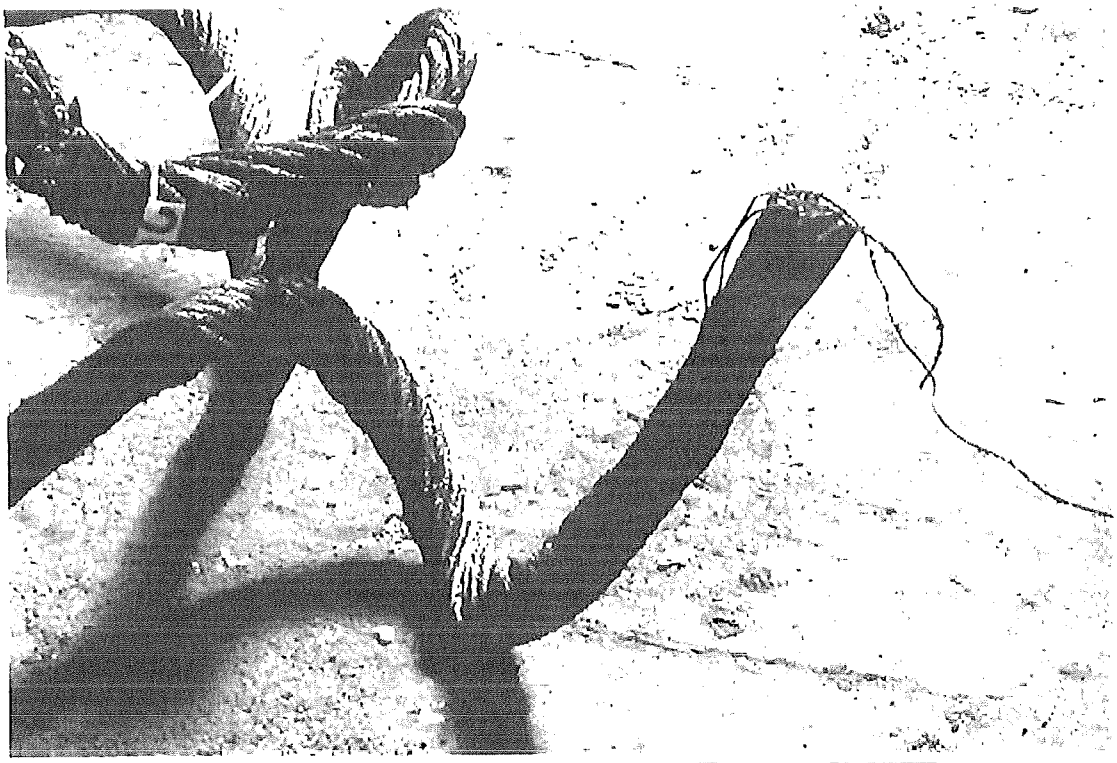

PHOTOGRAPH #6
A SECTION OF WIRE ROPE INSPECTED AT WAREHOUSE

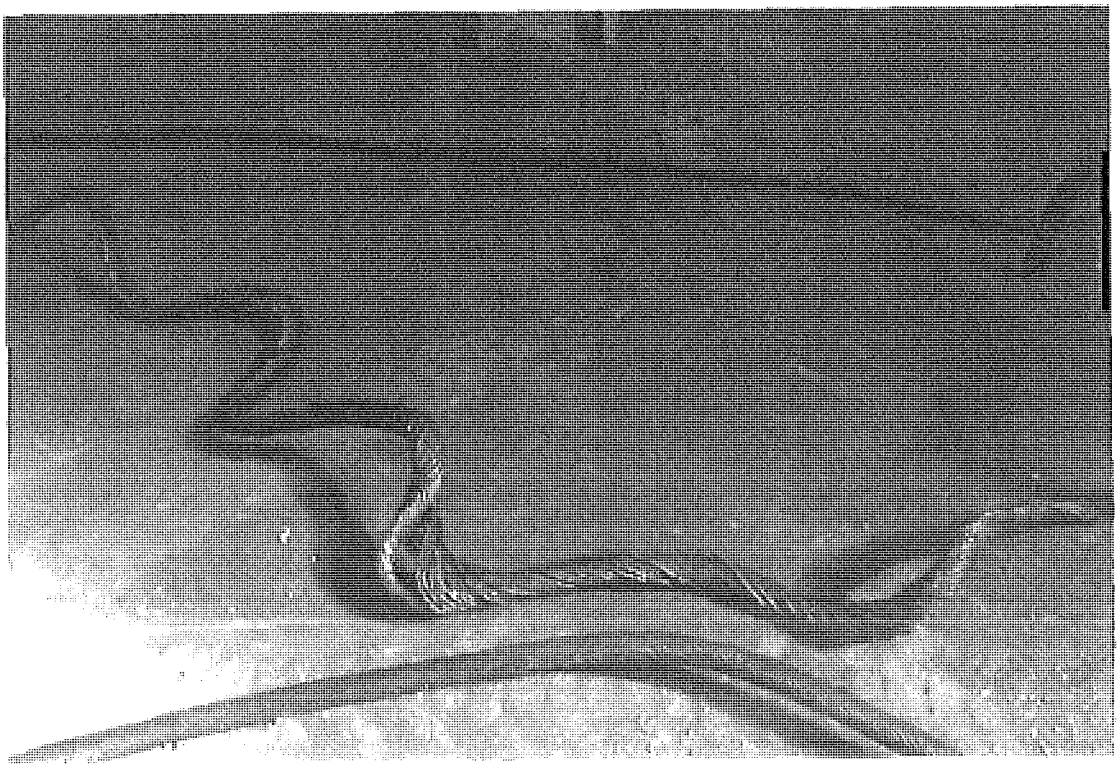

PHOTOGRAPH #7
A SECTION OF WIRE ROPE INSPECTED AT WAREHOUSE

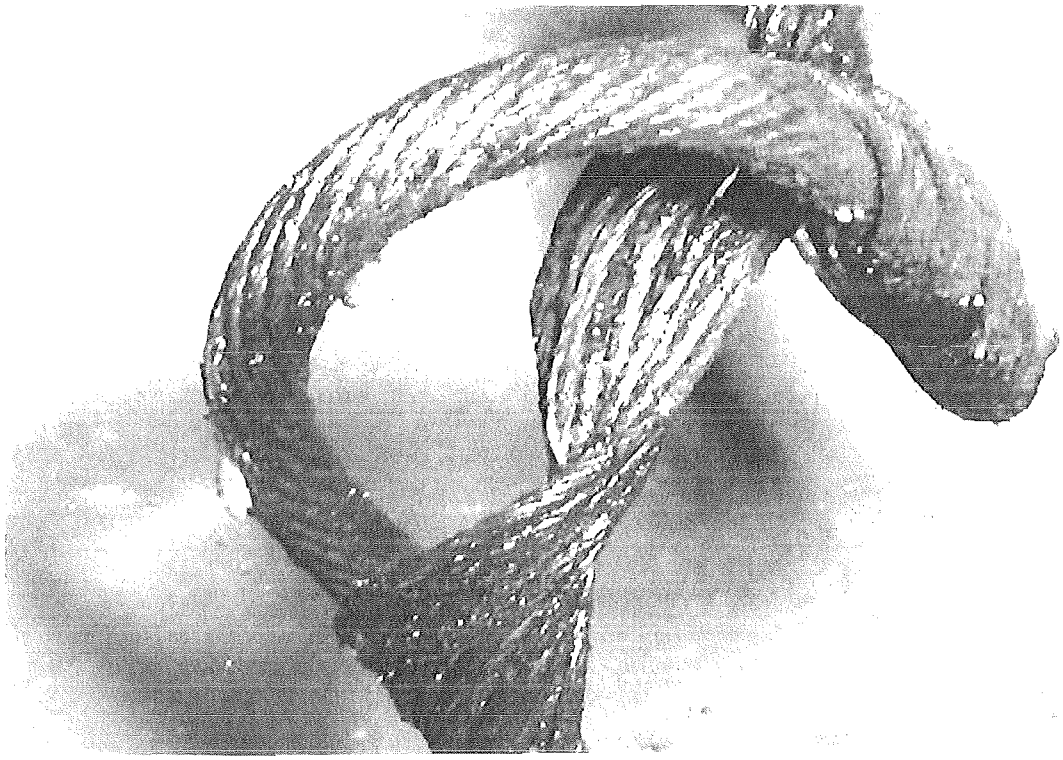

PHOTOGRAPH #8
A SECTION OF WIRE ROPE INSPECTED AT WAREHOUSE

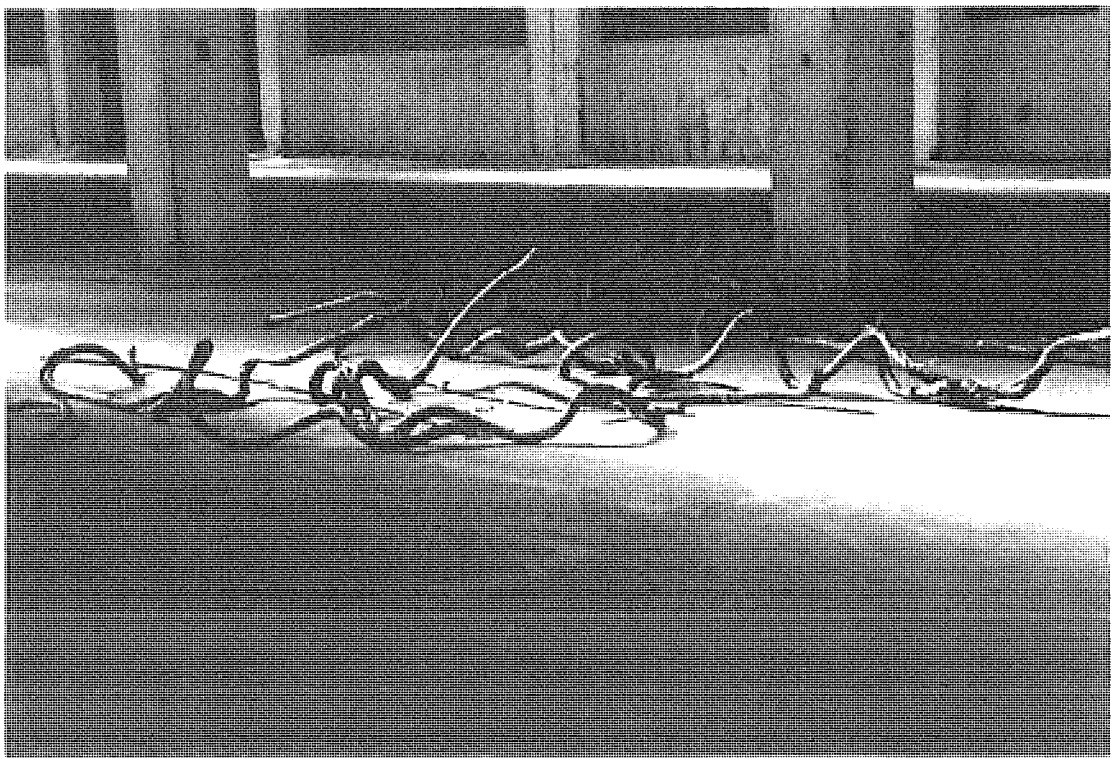

PHOTOGRAPH #9
A SECTION OF WIRE ROPE INSPECTED AT WAREHOUSE

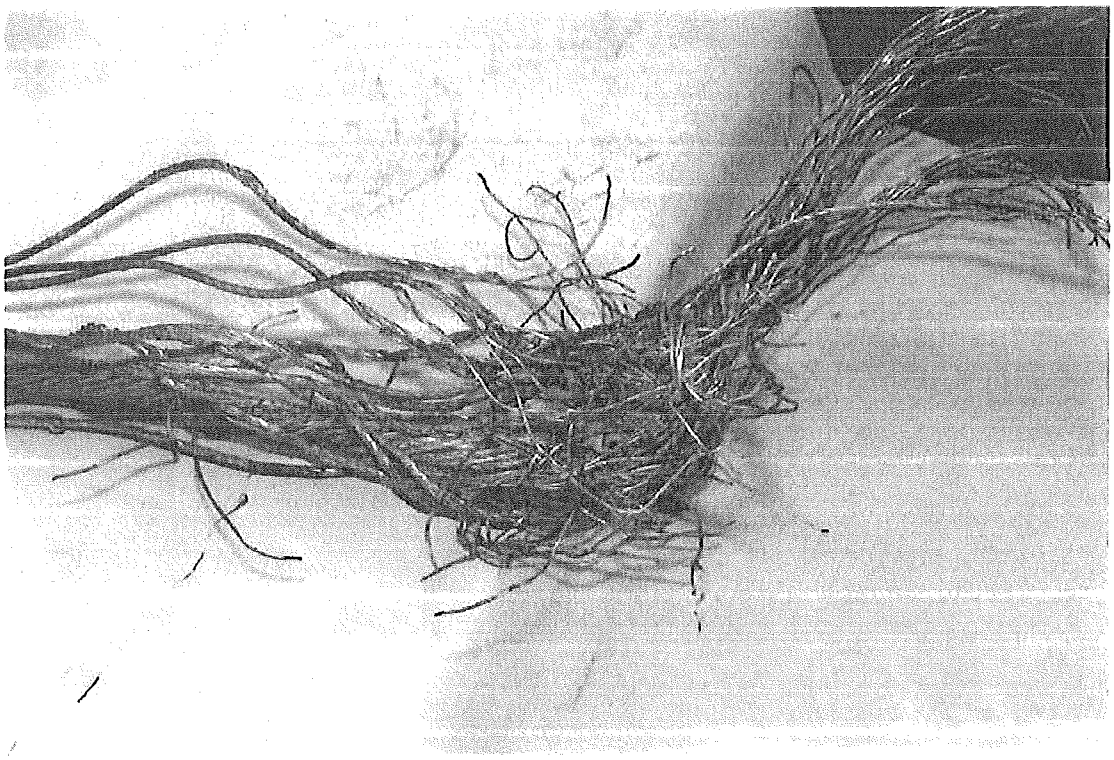

PHOTOGRAPH #10
FAILURE END OF WIRE ROPE OFF THE DRUM

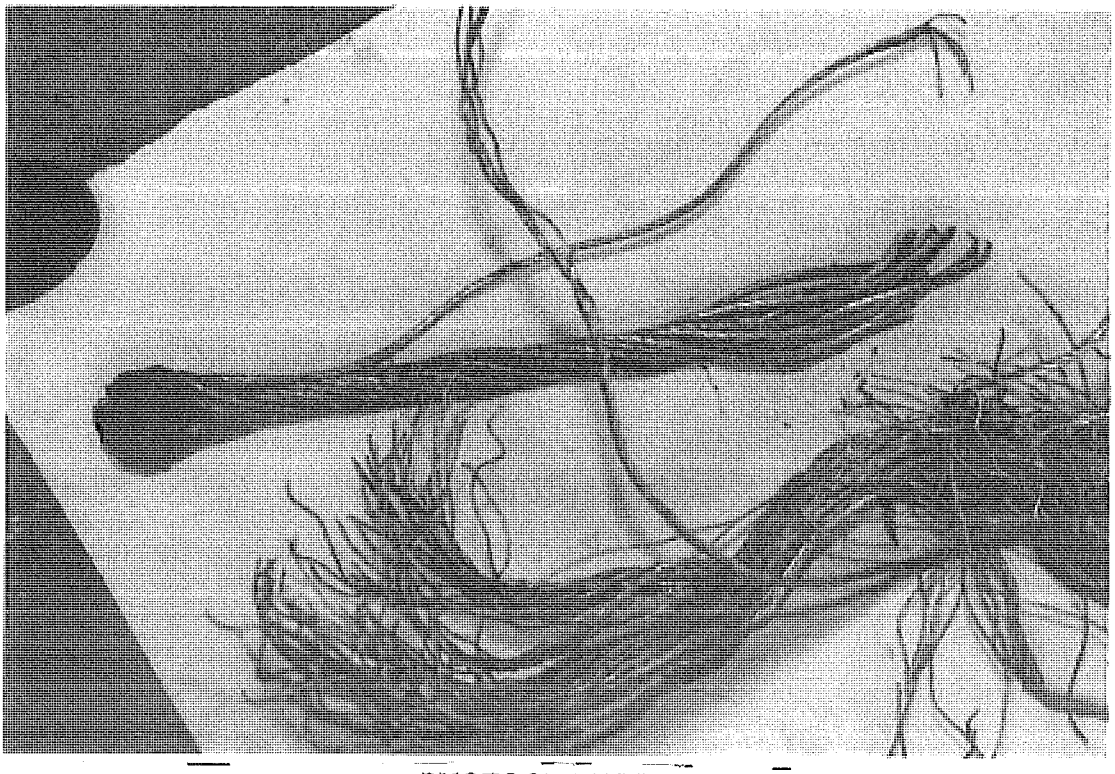

PHOTOGRAPH #11
BOTH ENDS OF WIRE ROPE BREAK

PHOTOGRAPH #12
"KNOT" FORMED AT TAIL END OF WIRE ROPE ON DRUM

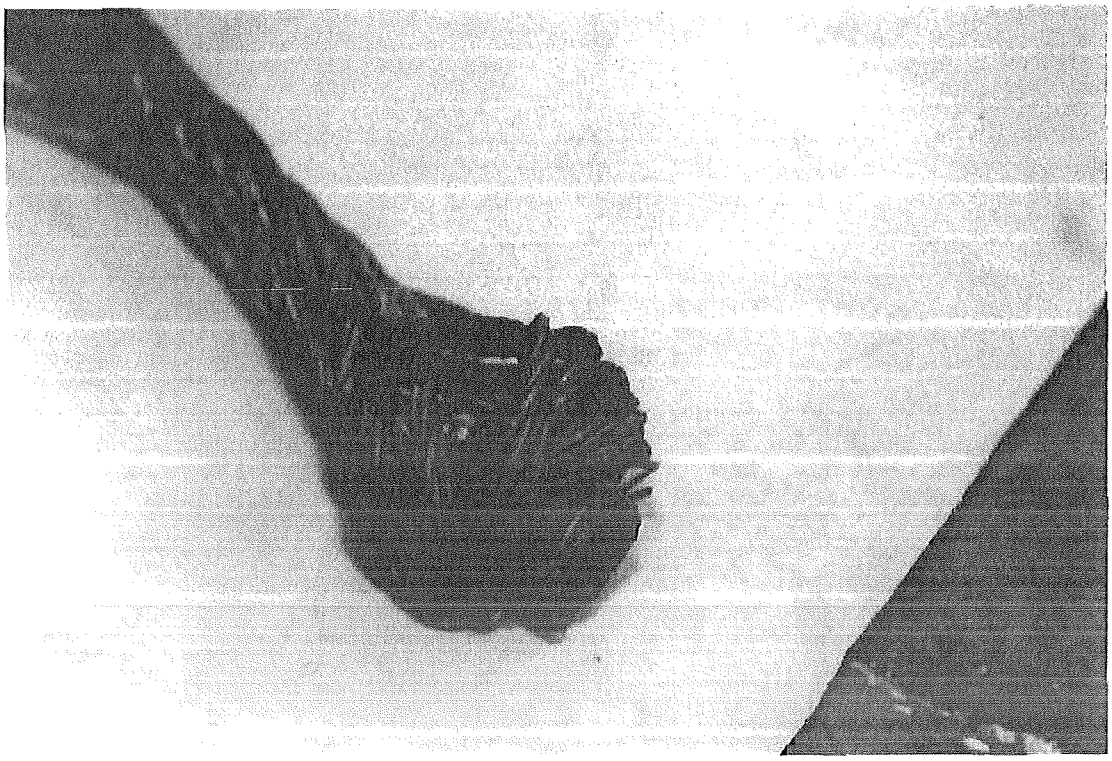

PHOTOGRAPH #13
TWISTED "KNOT" FORMED AT TAIL END OF WIRE ROPE ON DRUM

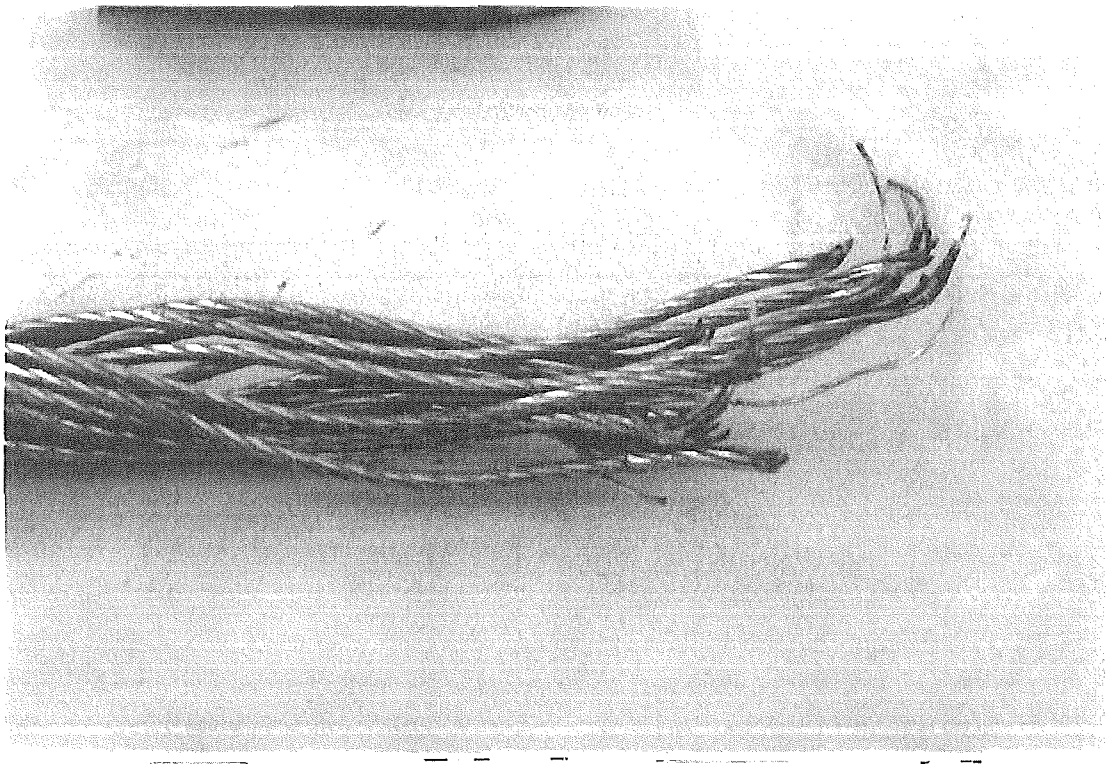

PHOTOGRAPH #14
OUTER STRAND WITH BENT AND CRUSHED WIRES AT BREAK

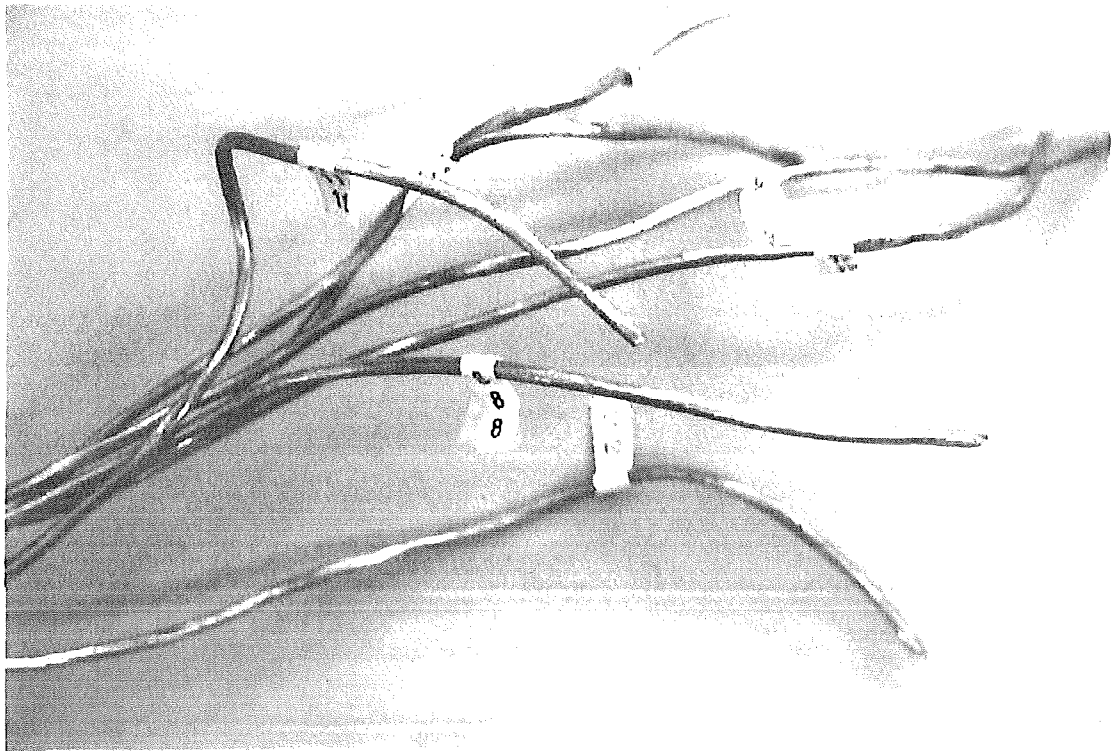


PHOTOGRAPH #15
BROKEN WIRE ENDS OF OUTER WIRE ROPE STRANDS

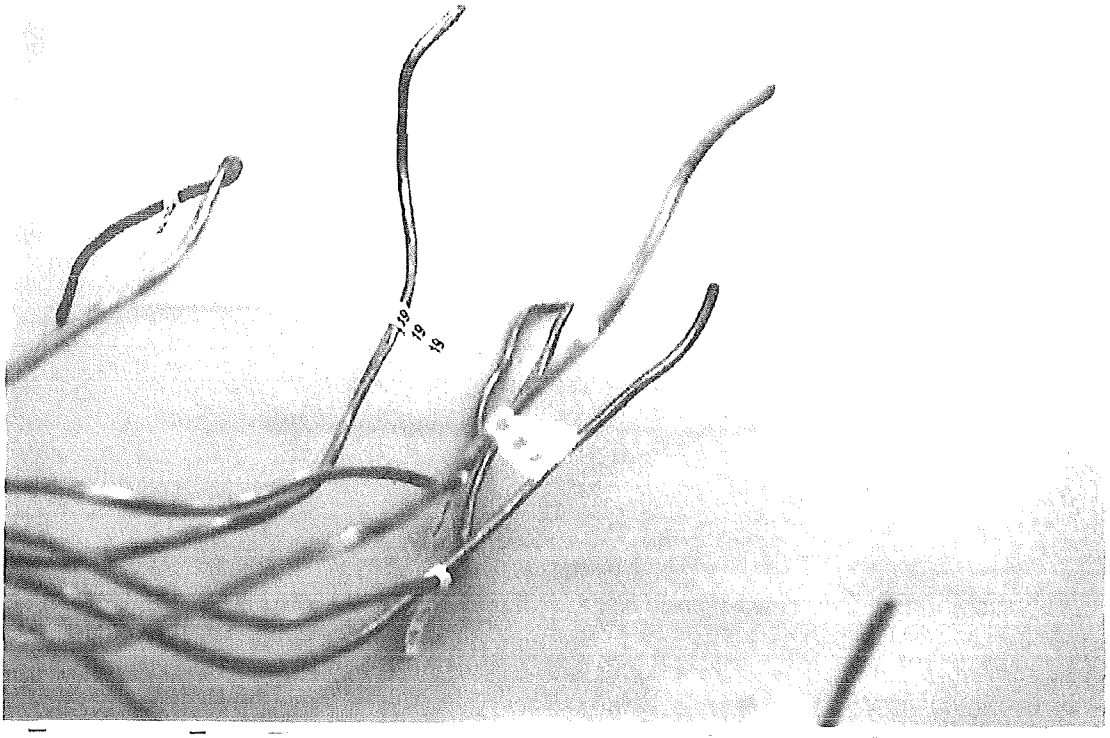


PHOTOGRAPH #16
BROKEN WIRE ENDS OF OUTER WIRE ROPE STRANDS

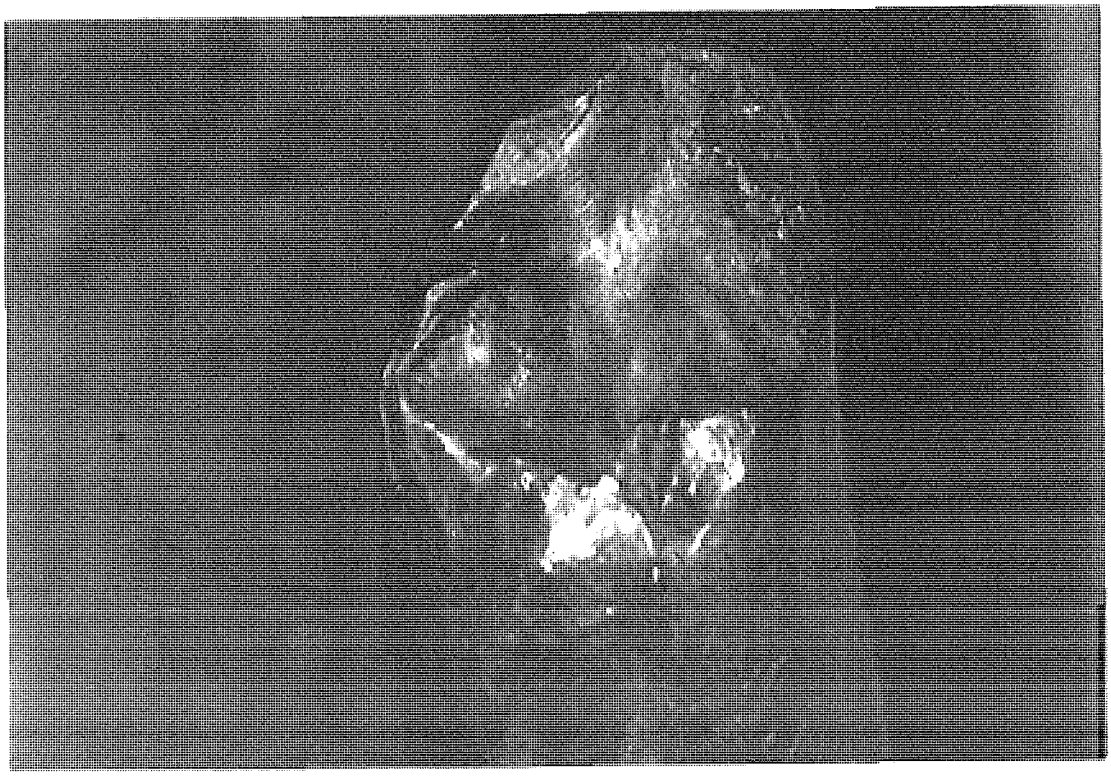

PHOTOGRAPH #17
CRUSHED WIRES AT BROKEN END OF WIRE ROPE

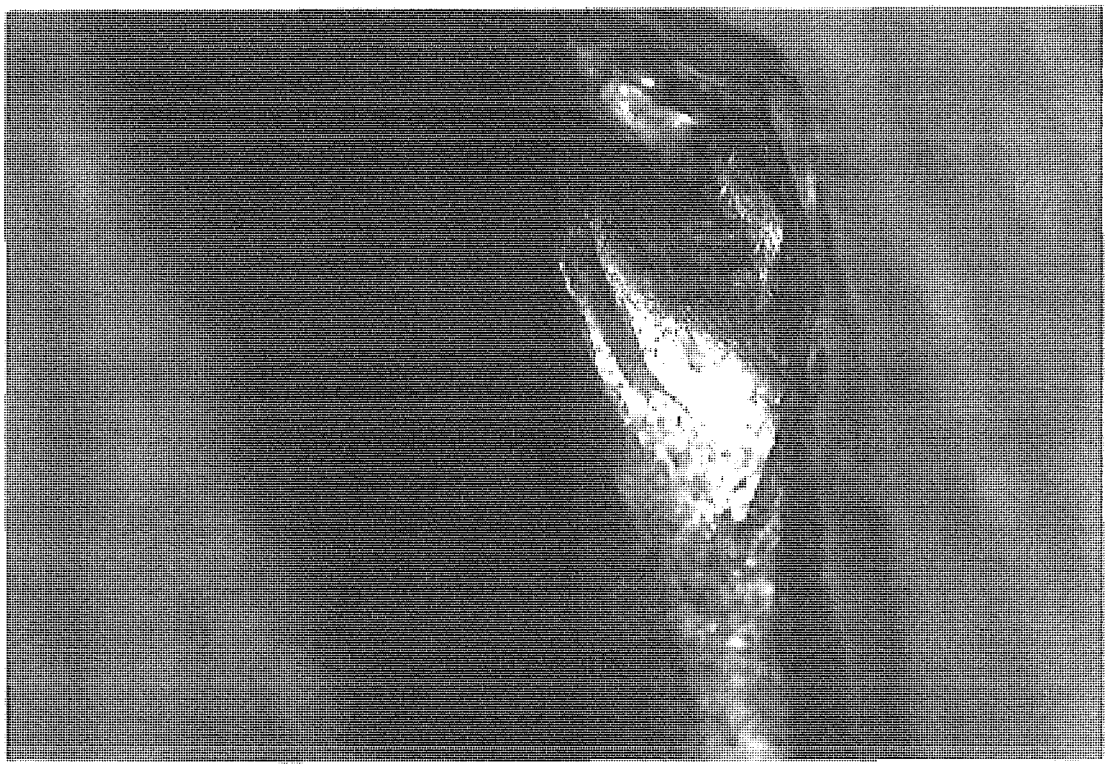

PHOTOGRAPH #18
CRUSHED WIRES AT BROKEN END OF WIRE ROPE

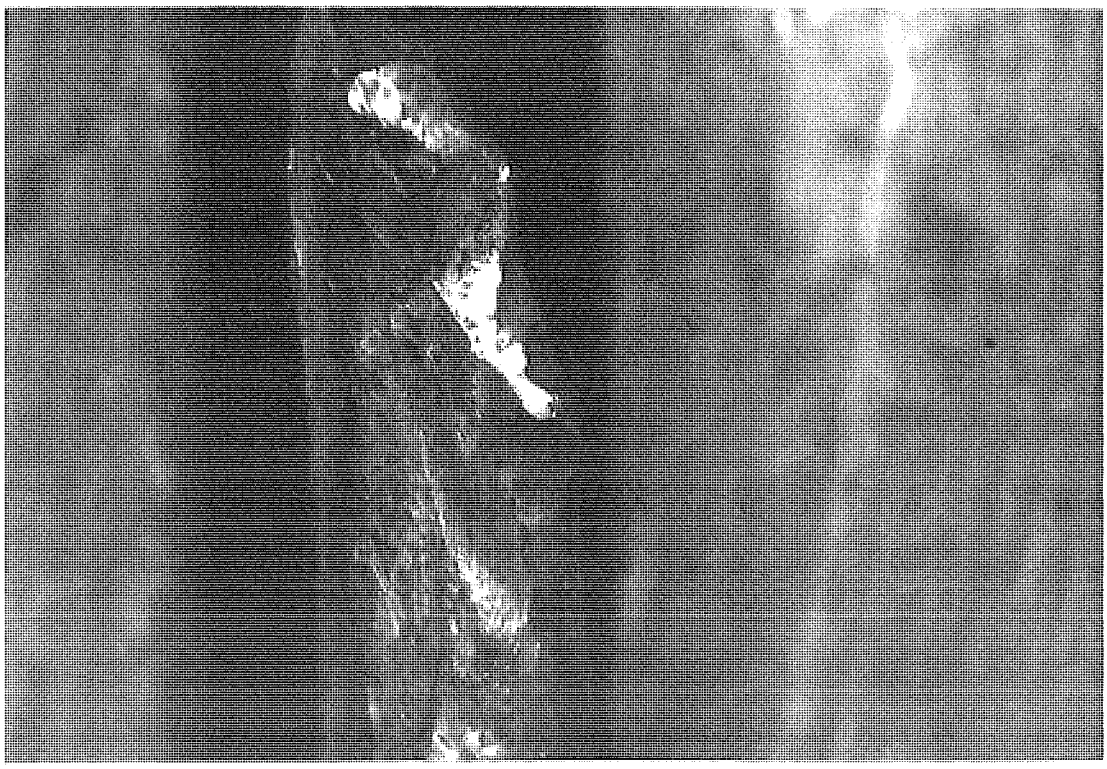

PHOTOGRAPH #19
CRUSHED WIRES AT BROKEN END OF WIRE ROPE

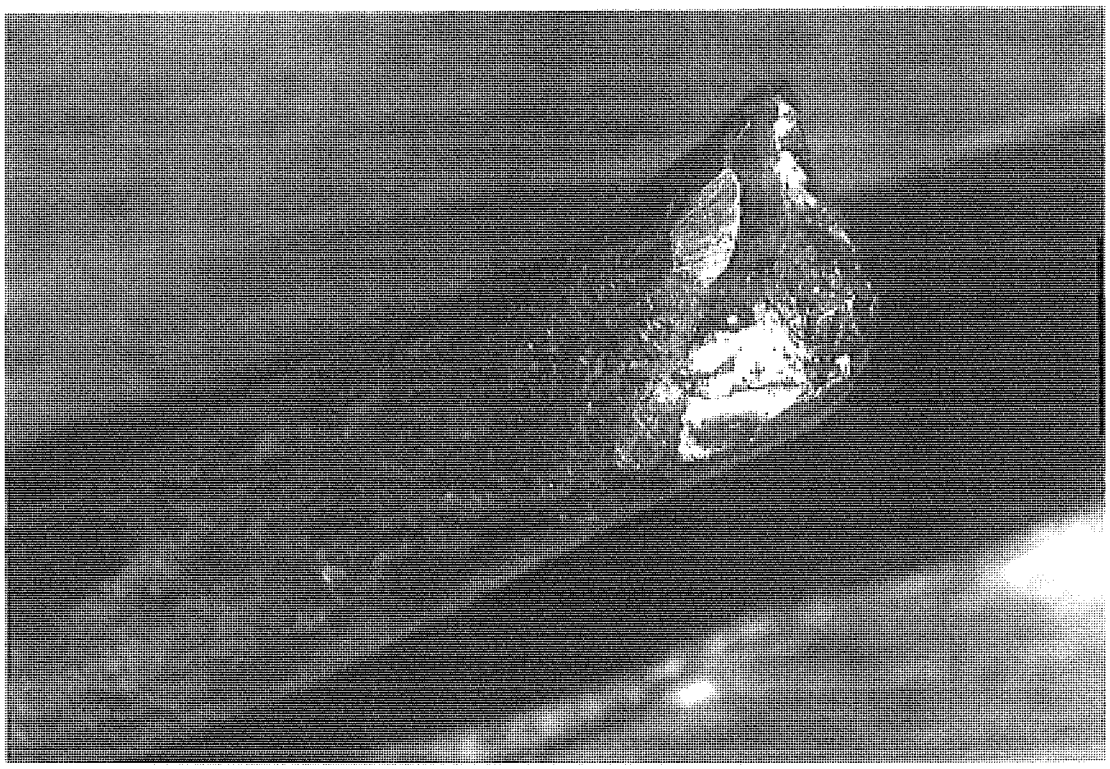

PHOTOGRAPH #20
CUTTING OF WIRES AT BROKEN END OF WIRE ROPE

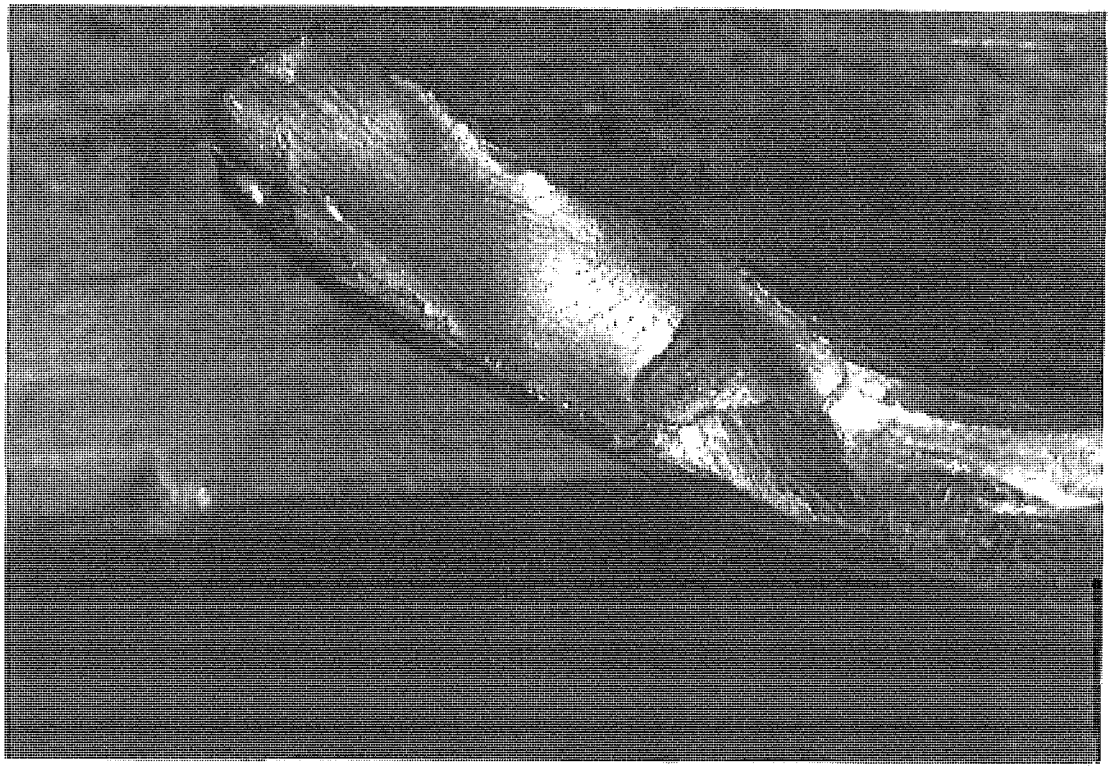

PHOTOGRAPH #21
CUTTING OF WIRES AT BROKEN END OF WIRE ROPE

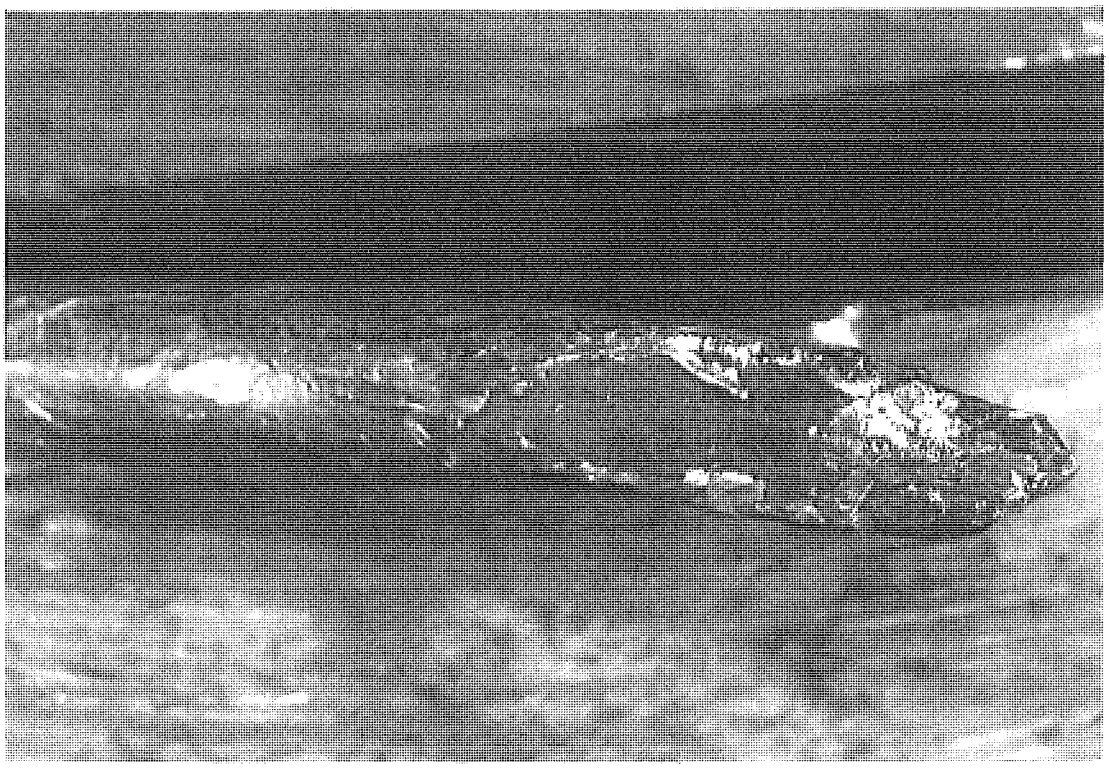

PHOTOGRAPH #22
SHEARING OF WIRES AT BROKEN END OF WIRE ROPE

PHOTOGRAPH #23
SHEARING OF WIRES AT BROKEN END OF WIRE ROPE

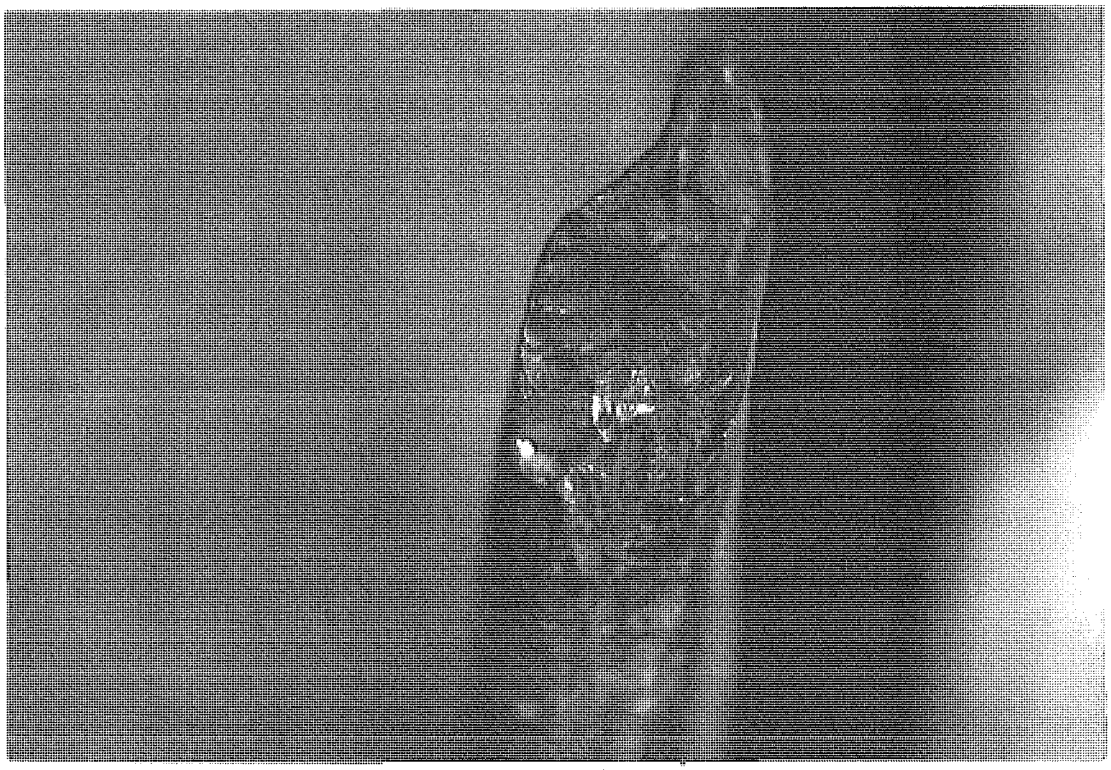

PHOTOGRAPH #24
SHEARING OF WIRES AT BROKEN END OF WIRE ROPE

F12110

Project: F12110
Owner: INCA
Site: Site of Interest 3

Sample: Sample 1
Type: Default
ID:

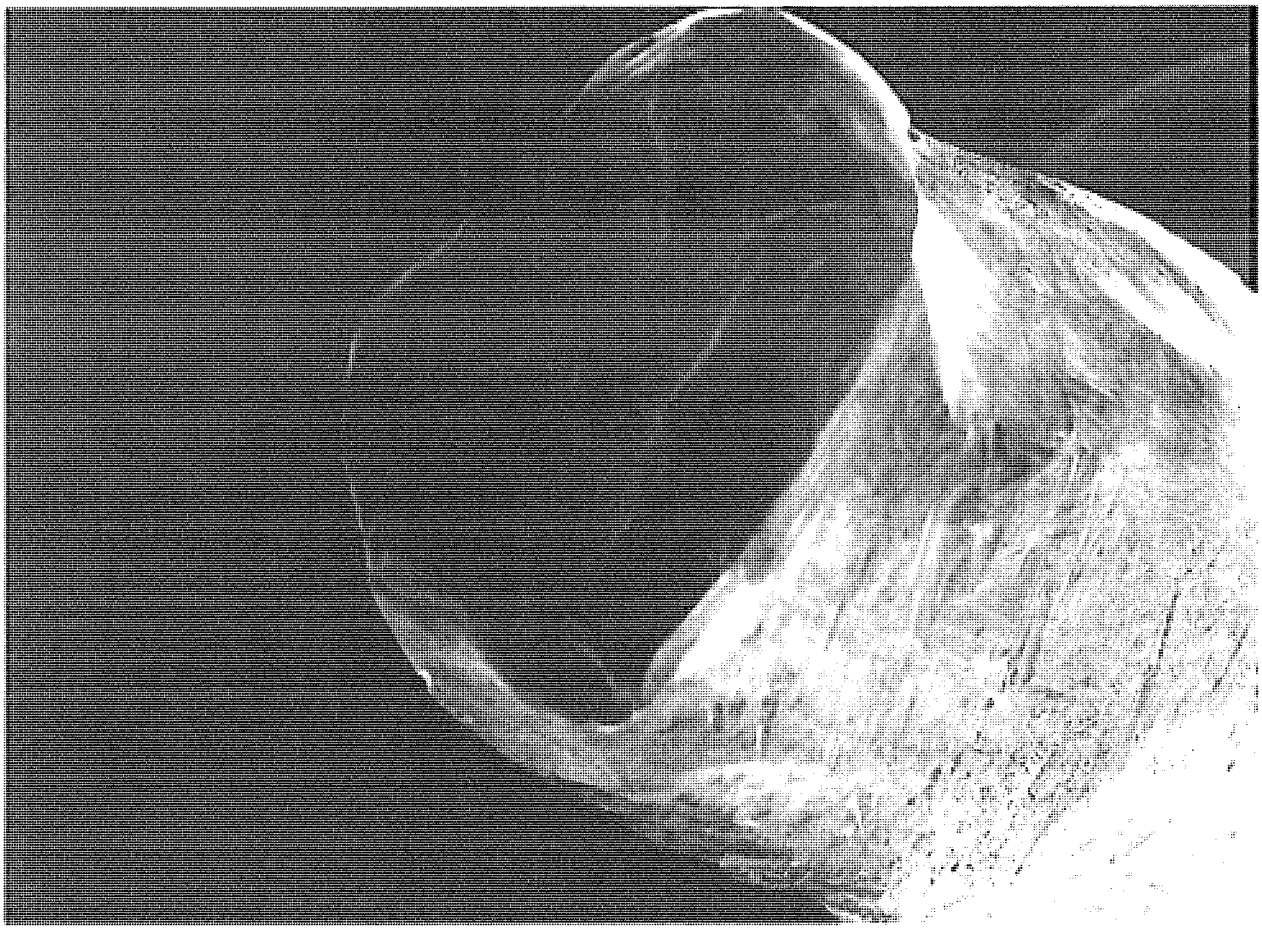

4mm

Electron Image 1

Comment: 2-10 26X

PHOTOGRAPH #25
SEM PHOTO OF DAMAGE AT BROKEN WIRE END

F12110

Project: F12110
Owner: INCA
Site: Site of Interest 1

Sample: Sample 1
Type: Default
ID

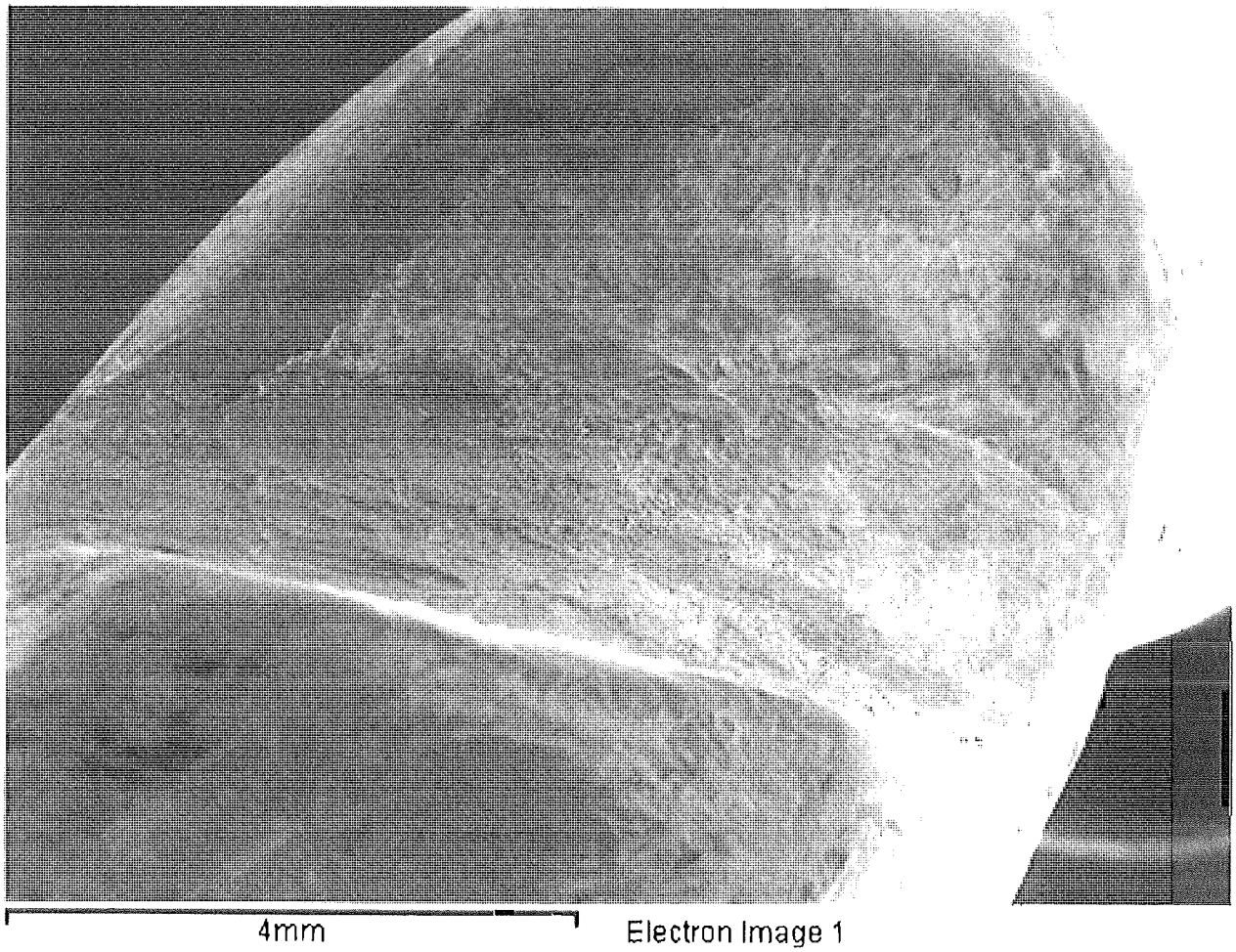


Comment: 1-22 30X

PHOTOGRAPH #26
SEM PHOTO OF DAMAGE AT BROKEN WIRE END

F12110

| | |
|---|---|
| Project: F12110<br>Owner: INCA<br>Site: Site of Interest 3 | Sample: Sample 1<br>Type: Default<br>ID: |

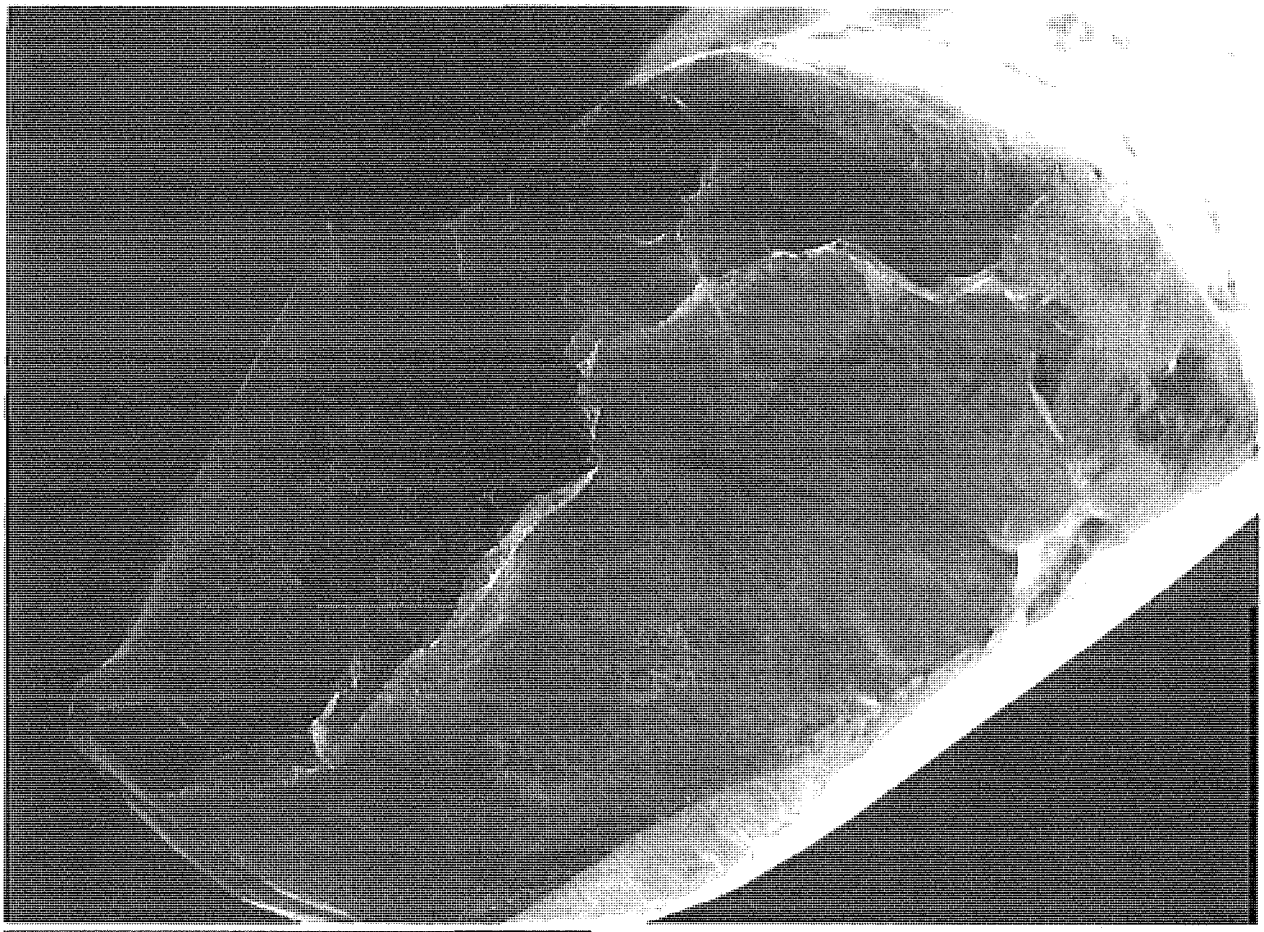

4mm Electron Image 1

Comment 3-17 30X

PHOTOGRAPH #27
SEM PHOTO OF DAMAGE AT BROKEN WIRE END

F12110

Project: F12110
Owner: INCA
Site: Site of Interest 4

Sample: Sample 1
Type: Default
ID:

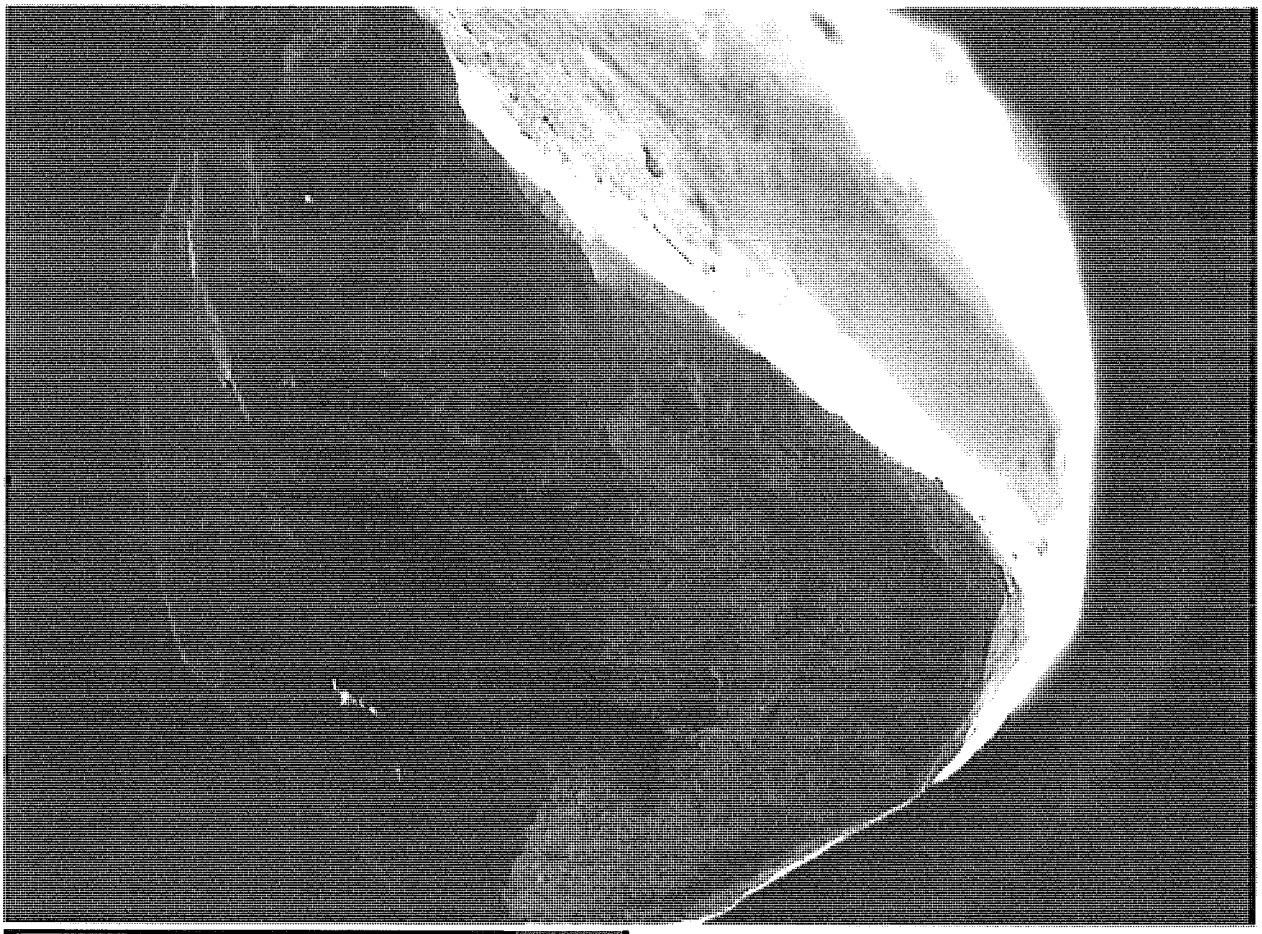

4mm Electron Image 1

Comment: 4-2 32X

PHOTOGRAPH #28
SEM PHOTO OF DAMAGE AT BROKEN WIRE END

Attachment E

HAAG

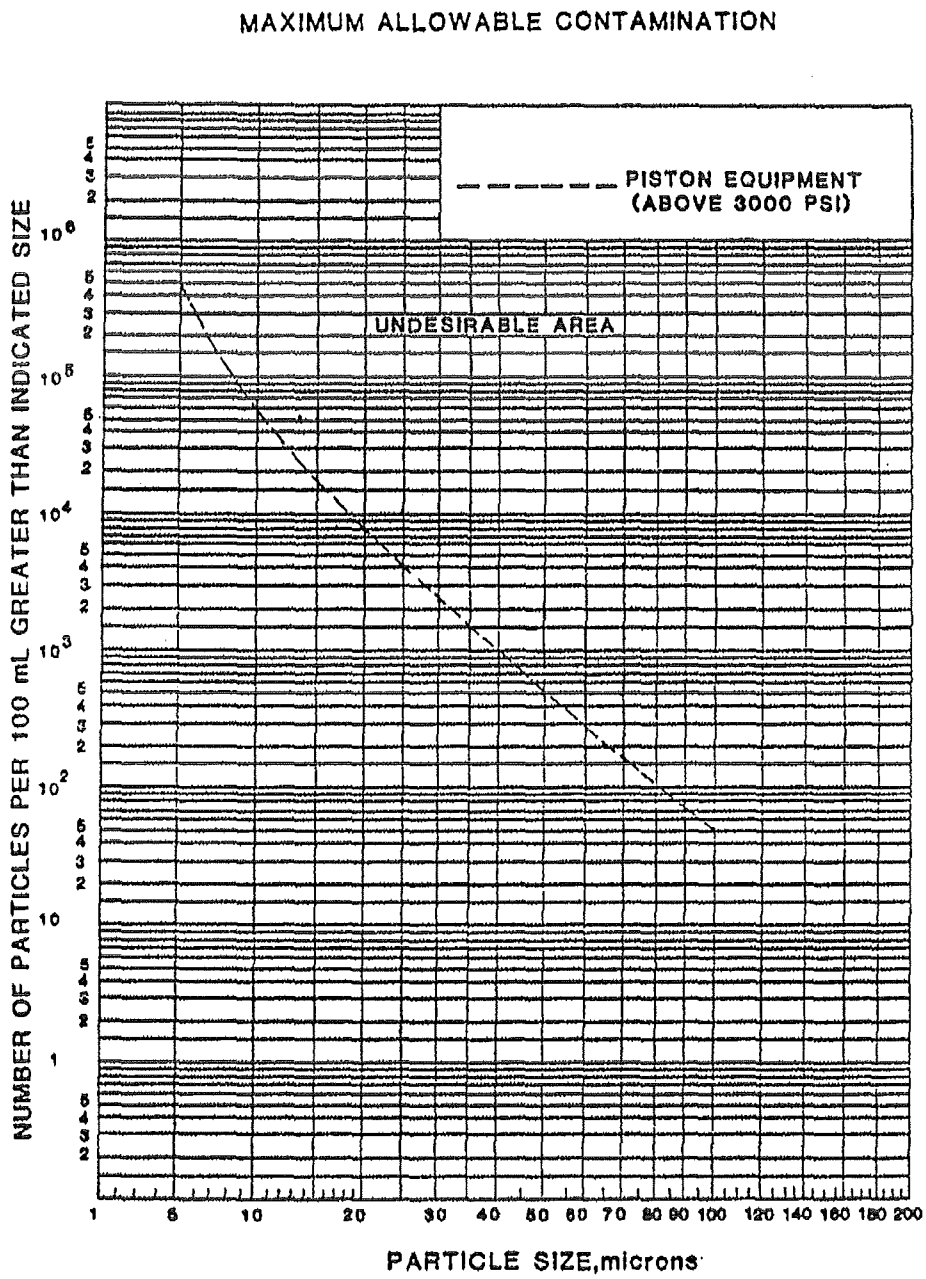


Fig. 5-35
Maximum Allowable Contamination Level

Attachment F

HAAG

## ISO 4406 Code

Cleanliness levels are defined by three numbers divided by slashes (/.) These numbers correspond to 4, 6, and 14 micron, in that order. Each number refers to an ISO Range Code, which is determined by the number of particles for that size (4,6, & 14µm) and larger present in 1 ml of fluid. Each range is double the range below. Refer to the chart below to see the actual ranges.

### Example:

**larger than 4µm = 22,340**
**larger than 6µm = 1,950**
**larger than 14µm = 43**

**ISO Code = 22 / 18 / 13**

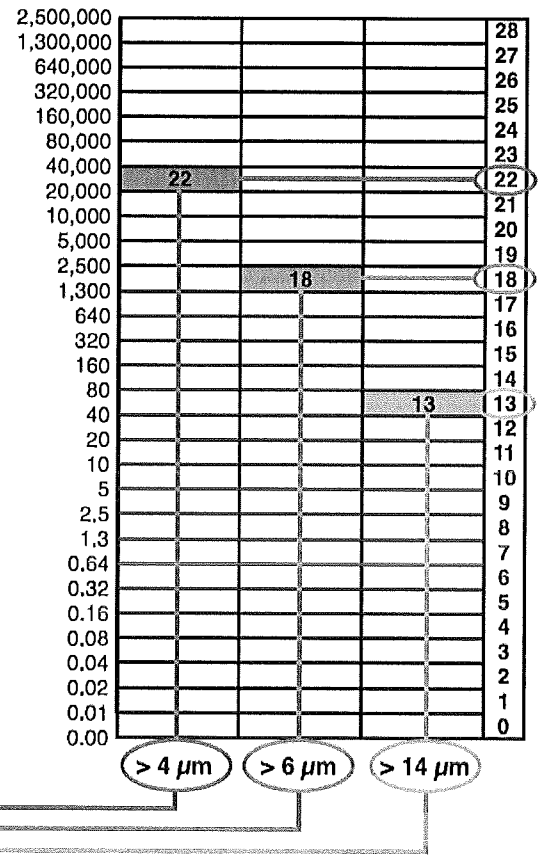


### *Achieving the appropriate cleanliness level in a system*

The only way to achieve and maintain the appropriate cleanliness level in a hydraulic or lubrication system, is to implement a comprehensive filtration program. HYDAC offers all of the products that are needed to do just that! - They include:

### *Solid Contamination*

- pressure filters
- return line filters
- offline filtration loops
- oil transfer units for precleaning of new oil
- portable and online contamination monitors
- reservoir breathers and filler/breathers

### *Water Content*

- water content sensors
- reservoir breathers with silica gel desiccant
- vacuum dehydration water removal units
- water removal elements

### *Fluid Analysis*

- bottle sampling kits
- complete analysis kits

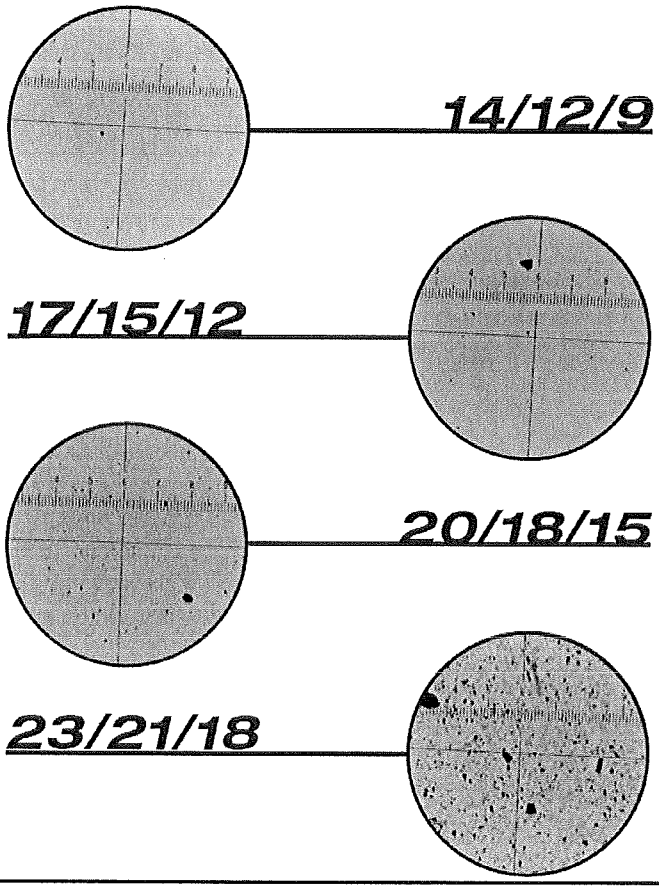

## *Finding the cleanliness level required by a system*

1. Starting at the left hand column, select the most sensitive component used in the system.
2. Move to the right to the column that describes the system pressure and conditions.
3. Here you will find the recommended ISO class level, and recommended element micron rating.

| | Low/Medium Pressure Under 2000 psi (moderate conditions) | | High Pressure 2000 to 2999 psi (low/medium with severe conditions[1]) | | Very High Pressure 3000 psi and over (high pressure with severe conditions[1]) | |
|---|---|---|---|---|---|---|
| | ISO Target Levels | Micron Ratings | ISO Target Levels | Micron Ratings | ISO Target Levels | Micron Ratings |
| **Pumps** | | | | | | |
| Fixed Gear or Fixed Vane | 20/18/15 | 20 | 19/17/14 | 10 | 18/16/13 | 5 |
| Fixed Piston | 19/17/14 | 10 | 18/16/13 | 5 | 17/15/12 | 3 |
| Variable Vane | 18/16/13 | 5 | 17/15/12 | 3 | not applicable | not applicable |
| Variable Piston | 18/16/13 | 5 | 17/15/12 | 3 | 16/14/11 | 3[2] |
| **Valves** | | | | | | |
| Check Valve | 20/18/15 | 20 | 20/18/15 | 20 | 19/17/14 | 10 |
| Directional (solenoid) | 20/18/15 | 20 | 19/17/14 | 10 | 18/16/13 | 5 |
| Standard Flow Control | 20/18/15 | 20 | 19/17/14 | 10 | 18/16/13 | 5 |
| Cartridge Valve | 19/17/14 | 10 | 18/16/13 | 5 | 17/15/12 | 3 |
| Proportional Valve | 17/15/12 | 3 | 17/15/12 | 3 | 16/14/11 | 3[2] |
| Servo Valve | 16/14/11 | 3[2] | 16/14/11 | 3[2] | 15/13/10 | 3[2] |
| **Actuators** | | | | | | |
| Cylinders, Vane Motors, Gear Motors | 20/18/15 | 20 | 19/17/14 | 10 | 18/16/13 | 5 |
| Piston Motors, Swash Plate Motors | 19/17/14 | 10 | 18/16/13 | 5 | 17/15/12 | 3 |
| Hydrostatic Drives | 16/15/12 | 3 | 16/14/11 | 3[2] | 15/13/10 | 3[2] |
| Test Stands | 15/13/10 | 3[2] | 15/13/10 | 3[2] | 15/13/10 | 3[2] |
| **Bearings** | | | | | | |
| Journal Bearings | 17/15/12 | 3 | not applicable | not applicable | not applicable | not applicable |
| Industrial Gearboxes | 17/15/12 | 3 | not applicable | not applicable | not applicable | not applicable |
| Ball Bearings | 15/13/10 | 3[2] | not applicable | not applicable | not applicable | not applicable |
| Roller Bearings | 16/14/11 | 3[2] | not applicable | not applicable | not applicable | not applicable |

1. Severe conditions may include high flow surges, pressure spikes, frequent cold starts, extremely heavy duty use, or the presence of water
2. Two or more system filters of the recommended rating may be required to achieve and maintain the desired Target Cleanliness Level.

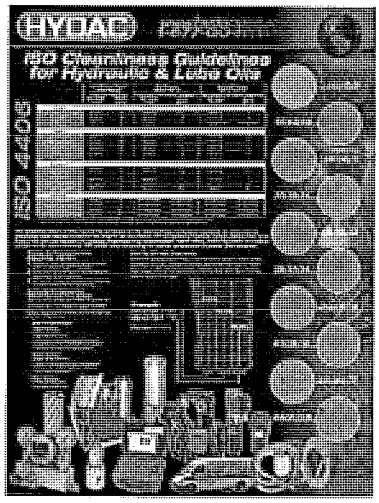


*FREE Poster!*

The information on these two pages is also available on our **ISO Cleanliness Guidelines** poster.

Visit our web site to request your FREE copy.

**www.HYDACusa.com/poster**