3.0 Alternatives

This section describes the alternatives screening process that culminated with identification of the No-Build Alternative and the several Build Alternatives evaluated in detail in this EIS. Section 3.1 includes a summary of the alternatives screening process while Section 3.2 describes the minor alignment refinements that were made to the Build Alternatives after completion of the alternatives screening process. Section 3.3 describes the No-Build and Build Alternatives in detail, as a basis for considering each alternative's potential impacts as documented in Section 5.0, *Environmental Consequences*. Finally, Section 3.4 provides a description of the construction methodologies common to each Build Alternative, as well as those construction methodologies that are different between the Build Alternatives. Section 3.4 also provides a description of the anticipated construction traffic staging for each Build Alternative, and describes ancillary construction activities related to the demolition of the existing Goethals Bridge, local roadway modifications, and the replacement of the Travis Branch Railroad overpass.

3.1 Alternatives Screening Process

A series of technical studies have been conducted to identify the Build Alternatives that are reasonable and feasible and, therefore, warrant further consideration through detailed evaluations in this EIS. Those studies comprised the development of preliminary alternatives and a tiered screening process, which is described in this section. Appendix B provides detailed information about the full alternatives screening process (including methodology, findings and results) which was completed in 2007 pursuant to the National Environmental Policy Act (NEPA). With the Goethals Bridge eligible for listing in the National Register of Historic Places, the Appendix E.6 also provides supplemental information on the screening process of two of those alternatives that complied with the consideration of historic resource rehabilitation as defined under the Secretary of Interior's Standards for Rehabilitation (Title 36 CFR 67); thereby including either the rehabilitation of the existing bridge (also referred then as the "*Rehabilitation Alternative of the Existing Goethals Bridge*") or the construction of a new parallel bridge adjacent to the existing rehabilitated bridge (also referred then as "*Modified Rehabilitation or Parallel Bridge Alternative*").[1]

The full alternatives evaluation process conducted pursuant to NEPA is depicted in Figure 3.1-1, beginning with definition of the project purpose and need and related goals and concluding with the Final EIS. The alternatives screening process, which is an element of the full alternatives evaluation process, occurs in the early stages and is consists of two distinct phases:

1) An initial, qualitative screening of preliminary alternatives that were deemed potentially reasonable and feasible to address the project purpose and need; and
2) A comparative, quantitative screening of intermediate alternatives advanced from the initial screening, on the basis of which project alternatives were selected for detailed evaluation in this EIS.

The preliminary alternatives, representing the universe of potentially reasonable and feasible project alternatives, were identified on the basis of their responsiveness to the project purpose and need, and

[1] Pursuant to Section 106 of the National Historic Preservation Act (NHPA) and its associated implementing regulations (Title 36 CFR 800), these two specific rehabilitation alternatives have been further evaluated in consultation with the New Jersey Historic Preservation Office (NJHPO) and the New York State Office of Parks, Recreation, and Historic Preservation (NYSOPRHP). Such evaluation and respective findings are available in the *Historic Bridge Alternatives Analysis Report* (Appendix E.6), which was finalized and submitted in August 2008 to NJHPO and NYSOPRHP.

FIGURE 3.1-1
FULL ALTERNATIVES EVALUATION PROCESS

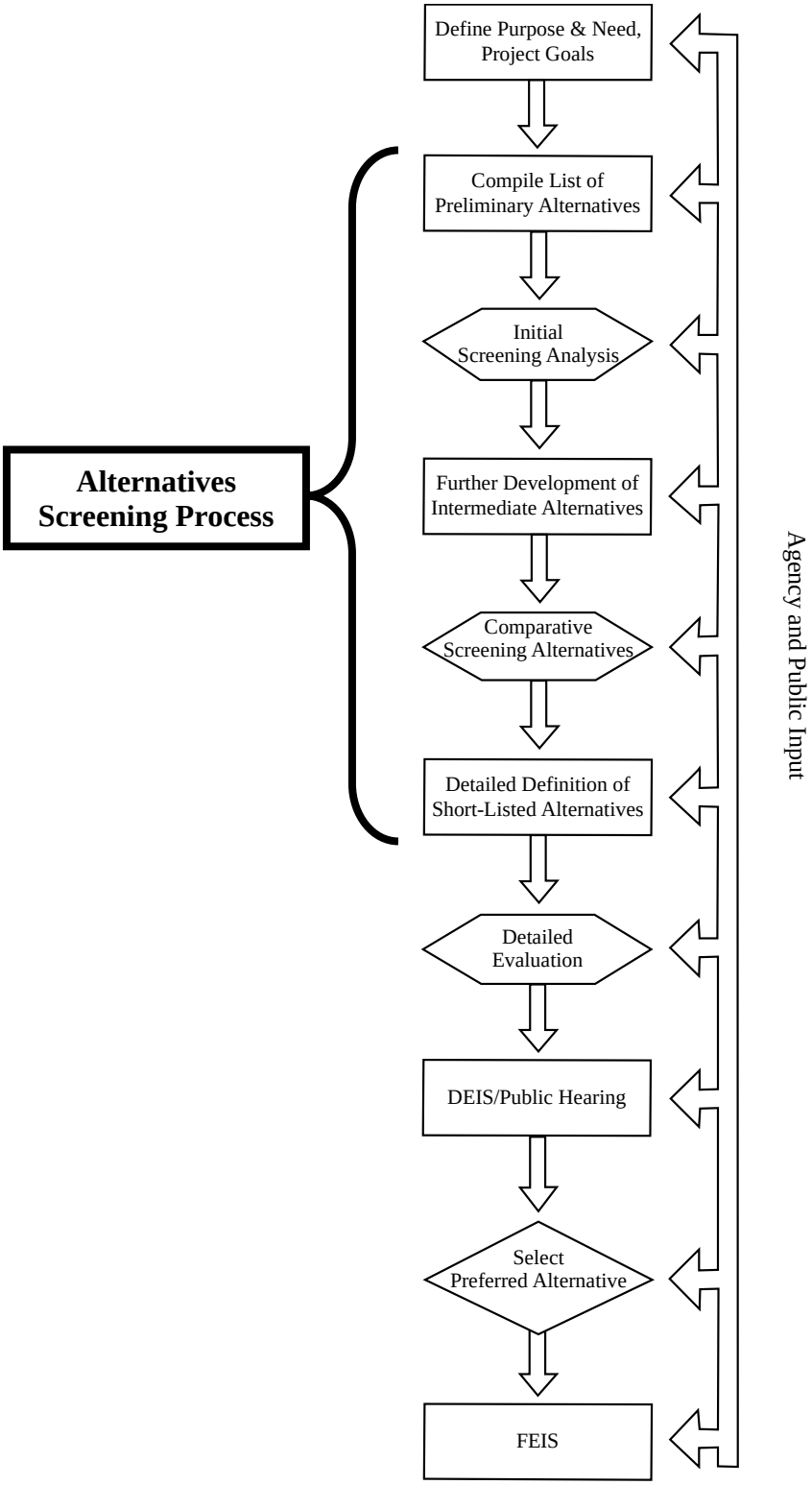

related goals, for the Proposed Project. This identification also considered such factors as: suggestions received during the agency and public scoping process; review of past studies of the Goethals Bridge corridor and the region served by the three Staten Island Bridges; and consideration of projected traffic and transportation conditions in the Goethals Bridge corridor. Potential solutions that would clearly not satisfy at least one aspect of the defined purpose and need for the Proposed Project, and/or were deemed not reasonable and feasible on the basis of investigation, were not identified as preliminary alternatives for the Proposed Project. Each preliminary alternative represented a single transportation mode in order to enable discrete consideration of its potential for addressing the project purpose and need, and was defined at a conceptual level, appropriate to the initial, qualitative screening.

The initial screening had two purposes: 1) to test each conceptual single-mode preliminary alternative against a limited set of qualitative criteria that were designed to determine, early in the screening process, any fundamental flaw(s) that would make it *not* reasonable and feasible; and 2) to consider how comprehensively each single-mode preliminary alternative would likely satisfy the full project purpose and need, and related goals. Based on the findings of the initial screening, the preliminary alternatives that would address at least one element of the project purpose and need and the related project goals and that did not have any fundamental flaw(s) were advanced to the comparative screening phase as intermediate alternatives. The intermediate alternatives were then more fully defined in terms of alignments, connections to the existing transportation network, system components, and other characteristics.

The intermediate alternatives were screened against a broader set of criteria and associated qualitative and quantitative performance measures, which collectively reflect the project purpose and need and related goals. The purpose of the comparative screening was to identify principal advantages and shortcomings of each intermediate alternative, highlight key differences among them, and determine the respective merits of each. The further definition and comparative screening of the intermediate alternatives was focused, rather than encyclopedic, to provide sufficient information for selection of a shortlist of alternatives that warrant further development, albeit still at a concept level, and detailed evaluation in this EIS.

3.1.1 Identification of the Preliminary Alternatives

Each of the preliminary alternatives identified for consideration in the screening process represented a single transportation mode that would directly address one or more aspects of the Proposed Project's purpose and need. Transportation options that would not directly address at least some aspect of the project purpose and need were not included as preliminary alternatives.[2] In addition to a "no-action" (no-build) preliminary alternative, four categories of "build" alternatives were identified as potentially pertinent to the project purpose and need, within which a total of 15 preliminary "build" alternatives were identified; as listed in Table 3.1-1 and described below. (Details of the preliminary alternatives, and of the investigations conducted to identify them, are provided in Appendix B and in Appendix E.6).

[2] Six possible alternatives that were suggested during the agency and public scoping process for the DEIS were deemed to be not reasonable for consideration as preliminary alternatives. See the first appendix included in Appendix B for details of these options and the rationale for their dismissal from further consideration.

TABLE 3.1-1
PRELIMINARY ALTERNATIVES

Categories of Preliminary Alternatives	Specifically-Identified Preliminary Alternatives
No-Action (No-Build) Alternative	• No Proposed Project [(a)]
Preliminary New-Crossing Alternatives	• Goethals Replacement Bridge South [(b)] • Goethals Replacement Bridge North [(b)] • Goethals Twin Replacement Bridges South [(b)] • Goethals Twin Replacement Bridges North [(b)] • Goethals Parallel Bridge South [(c)] • Goethals Parallel Bridge North [(c)]
Preliminary Transit Alternatives	• Bus Rapid Transit via New Goethals Bridge • Ferry Service, with or without a New Goethals Bridge
Preliminary Travel Demand Management Alternatives	• Temporal Shift, with or without a New Goethals Bridge • Temporal, Payment, and Mode Shift, with or without a New Goethals Bridge • Peak-Period Temporal Shift and Transit Support, with or without a New Goethals Bridge • High-Occupancy Toll Lane, with a New Goethals Bridge
Preliminary Freight-Movement Alternatives	• Highway Freight-Movement Enhancement Alternative, with a New Goethals Bridge • Rail Freight-Movement Enhancement Alternative, with or without a New Goethals Bridge • Intermodal Freight-Movement Enhancement Alternative, with or without a New Goethals Bridge

Notes:
(a) This assumes no implementation of Proposed Project, but it would still require future rehabilitation and routine maintenance activities due to the structural integrity of the 81-year old bridge. Pursuant to the Secretary of Interior's Standards for Rehabilitation, this No-Action (or No-Build) alternative constitutes a similar alternative to the "*Rehabilitation Alternative of the Existing Goethals Bridge*" as defined in Appendix E.6.
(b) These four Preliminary New-Crossing Alternatives, as per their original nomenclature at the beginning of the project, constitutes the build bridge-replacement alternatives, which were eventually refined with a new nomenclature and advanced into the EIS following completion the alternative screening process in 2007 (see Section 3.2 below).
(c) With a new 3-lane bridge parallel to either the north or south of the existing bridge, these two Preliminary New-Crossing Alternatives assume the concurrent rehabilitation and reconfiguration of the existing Goethals Bridge into a 3-lane thoroughfare. Pursuant to the *Secretary of Interior's Standards for Rehabilitation*, these two alternatives constitute similar alternatives to the "*Modified Rehabilitation or Parallel Bridge Alternative*" as defined in Appendix E.6.

Source: Berger/PB, 2007 and 2008

3.1.1.1 No-Action Alternative

The no-action (or no-build) alternative assumes that the Proposed Project would not be undertaken. However, given continued and increasing repair and maintenance needs and related questions of structural integrity associated with the 81-year-old bridge, this preliminary alternative would include future rehabilitation activities in addition to routine maintenance in order to maintain this critical crossing in the interstate highway network.[3] As the existing bridge was designed to accommodate the lighter vehicle

[3] The 2005 major rehabilitation and repair contract in 2005 involved interim repairs expected to extend the life of the structure for another 7 to 10 years, which was performed for an overall cost of about $65 million.

weights of the early 20th century, an increase in vehicle weights would continue to adversely affect the condition of the riding surface, deck slab and deck joints of the structure. In approximately 7 to 10 years, the existing structure would require, at minimum, a full deck replacement and retrofit procedures for seismic upgrade, as well as security upgrades. Due to the age of the structure and the fact that the bridge is well past its normal service life, future rehabilitation and repair activities, including those related to the superstructure and substructure, would also likely be required. (See Section 3.1 of Appendix B for details of the no-action alternative).

The deck replacement would occur over a span of 4.5 to 5.5 years if conducted during daytime hours, with attendant closures of two lanes of traffic on the bridge. If deck replacement were to be conducted at night, construction would take 7 to 8 years and involve nighttime closure of two lanes and possible full closure of the roadway in one direction. Deck slab replacement costs would vary from $125 – $225 million, depending on the selected deck system, construction duration, and maintenance of traffic plan specifics. Following the deck replacement, the Goethals Bridge's geometric and design deficiencies (10-foot lane-widths; lack of shoulders; approach span grade and alignment), and consequent functional obsolescence, would remain and could not be rectified. The functional obsolescence would likely continue to contribute to reduced traffic capacity and unsatisfactory service levels, cumulatively resulting in diminished traffic performance and traveler safety. Following the deck replacement and other rehabilitation work anticipated to be required in the next decade, ongoing maintenance and periodic major rehabilitation projects would continue to be needed to keep the Goethals Bridge in service.

As noted in Table 3.1-1, the no-action alternative constitutes a similar alternative to the "*Rehabilitation Alternative of the Existing Goethals Bridge*" as defined in Appendix E.6 and pursuant to Section 106 of the National Historic Preservation Act (NHPA) and its associated implementing regulations (Title 36 CFR 800).

3.1.1.2 Preliminary New-Crossing Alternatives

The identification of preliminary new-crossing alternatives focused on the existing Goethals Bridge corridor, spanning the Arthur Kill to connect major roadway systems in Staten Island, New York, and Elizabeth, New Jersey. This geographic focus appropriately reflects the project's purpose and need and the crossing's critical role in the corridor. Each preliminary new-crossing alternative comprised one or more new bridges replacing the existing Goethals Bridge, located immediately north or south of the existing bridge, and connecting to New Jersey Turnpike Interchange 13 on the west and to the Staten Island Expressway on the east, consistent with the existing crossing's termini. (See Section 3.2.1 of Appendix B for details of the preliminary new-crossing alternatives).

Replacement, parallel, and twin bridge structures, which were all considered as preliminary new-crossing alternatives, would be designed and constructed to meet current codes and standards. With the replacement bridge and twin bridge alternatives in the Goethals Bridge corridor, the existing span would be demolished and removed. With the twin bridge alternatives, the new bridge south or north of the existing bridge would be constructed first and would temporarily accommodate both directions of traffic until the existing bridge was demolished and the second bridge was constructed. With the parallel bridge alternatives, the existing span would be reconfigured with three lanes, to carry one direction of traffic after construction of a new bridge to the north or south of the existing bridge. Traffic lanes would be widened to meet design criteria, but the main span and approaches could accommodate only 4-foot-wide and 2-foot-wide right and left shoulders, respectively. The existing structure would require a full deck replacement and seismic upgrade.

As noted in Table 3.1-1, either parallel bridge alternative (north or south) constitutes a similar alternative to the "*Modified Rehabilitation or Parallel Bridge Alternative*" as defined in Appendix E.6 and pursuant to Section 106 of the NHPA and its associated implementing regulations (Title 36 CFR 800).

Any bridge crossing within the Goethals Bridge corridor must accommodate projected traffic volumes safely and efficiently in order to be responsive to the project purpose and need. The appropriate number of travel lanes is generally determined on the basis of forecasted traffic, considering other transportation improvements in the corridor and region that may affect travel demand volume and, as appropriate, configuration for multimodal access across the bridge. Each preliminary bridge alternative was defined to include a total of six lanes of traffic, three in each direction, in order to normalize the initial analysis of future traffic effect with a proposed Goethals Bridge replacement.

Current safety standards and practices dictate the use of a median barrier and shoulders, as well as wider lanes. A new bridge crossing would also include adequate width to provide for bicyclists, pedestrians, and potential transit use.

3.1.1.3 Preliminary Transit Alternatives

Preliminary transit alternatives that have potential to address the project purpose and need and related project goals were identified based on the following:

1) analysis of the potential transit market, as represented by principal current travel patterns and forecasts of future travel patterns of trips using the Goethals Bridge (e.g., predominant origin-destination pairs); and

2) potential transit modes (e.g., fixed-guideway systems, roadway-based systems, and waterborne systems) that may be suitable for the Goethals Bridge corridor; as defined in recent transit studies and transportation literature, suitability is based on land use/transit relationships related to cost-effectiveness, productivity, and efficiency.

(See Section 3.2.2 in Appendix B for a discussion of the basis for, and details of the preliminary transit alternatives.)

Two preliminary transit alternatives were defined. The preliminary Bus Rapid Transit (BRT) alternative would provide BRT service from Brooklyn, across the Verrazano Narrows Bridge and Staten Island to Union and Essex counties in New Jersey via a Goethals Bridge replacement(s), and from Interchange 2 of the West Shore Expressway north to and across the Goethals Bridge to the same destinations in Union and Essex counties. Exclusive bus lanes would be provided on a new Goethals Bridge(s), in the North Shore Railroad right-of-way, on the Staten Island Expressway (portions of which already exist or are under construction), and on the West Shore Expressway. BRT buses would operate in both directions on frequent headways via the busway network, would be supported by enhanced local bus services, and would be connected to existing ferry, rail, and bus transit services operated by NJ Transit and the Metropolitan Transportation Authority-New York City Transit (MTA-NYCT).

The preliminary ferry alternative would provide ferry service linking Brooklyn and St. George with a new ferry slip in Elizabethport via the Kill van Kull and New York Harbor. This alternative could be implemented with or without a Goethals Bridge replacement(s). Ferries would operate in both directions on 20-minute headways or more frequently, if warranted by passenger demand, and service would connect with local MTA-NYCT bus services in Brooklyn and St. George, as well as the Staten Island Railway.

3.1.1.4 Preliminary Travel Demand Management (TDM) Alternatives

Travel demand management (TDM) alternatives embody strategies that change travel behavior (i.e., how, when and where people travel) in order to increase transportation system efficiency and achieve specific objectives such as reduced traffic congestion, road and parking cost savings, increased safety, improved mobility for non-drivers, energy conservation and pollution emission reductions. Implementation of

TDM initiatives in the Goethals Bridge corridor was considered to determine their potential to reduce traffic volume and manage congestion on the crossing during peak hours. Four preliminary TDM alternatives were defined, as follows: 1) temporal shift, with or without Goethals Bridge replacement; 2) temporal, payment and mode shift, with or without Goethals Bridge replacement; 3) peak-period temporal shift and transit support, with or without Goethals Bridge replacement; and 4) High-Occupancy Toll (HOT) lane, with Goethals Bridge replacement. (See Section 3.2.3 in Appendix B for a discussion of the basis for, and details of the preliminary TDM alternatives.)

3.1.1.5 Preliminary Freight-Movement Alternatives

The identification of preliminary freight-movement alternatives was based on several factors, including: review of recent analyses of freight operations in the region and the resulting proposals for freight improvements; truck traffic related to the Port of New York and New Jersey, with major Port facilities located on either side of the Arthur Kill; analysis of freight operations in the study corridor, particularly at the Howland Hook Marine Terminal in Staten Island, located at the base of, and on the north side of the Goethals Bridge; and consideration of freight-movement-related comments received during the GBR EIS scoping process.

Three preliminary freight-movement alternatives were identified: 1) highway freight-movement enhancement on a Goethals Bridge replacement, including improved Howland Hook access, improvement of NJ Turnpike Interchange 13, and exclusive truck or shared HOV lanes on a replacement Goethals Bridge; 2) rail freight-movement enhancement, with or without a Goethals Bridge replacement, including improvements to the Conrail Chemical Coast Secondary (north and south), the Conrail Port Reading Secondary, and the Staten Island Railway (west); and 3) intermodal freight-movement enhancement, with or without a Goethals Bridge replacement, focused on improvements to the Arlington Yard Intermodal Distribution Facility. (See Section 3.2.4 in Appendix B for a discussion of the basis for, and details of these preliminary freight-movement alternatives.)

3.1.2 Initial Screening Criteria and Results

3.1.2.1 Initial Screening Criteria

The first step in the initial screening comprised a qualitative assessment of each preliminary alternative's fundamental reasonableness and feasibility, which, for transportation projects, is typically related to primary engineering, design, or operational considerations. Four criteria were defined to screen each preliminary alternative to determine if it could be considered reasonable for further consideration (see Section 2.1 in Appendix B for a detailed definition of the initial screening criteria). The four initial screening criteria are as follows:

1) A preliminary alternative must connect logical termini at existing and/or programmed and committed transportation facilities or services.

2) A preliminary alternative must be able to be operationally integrated with the existing and/or programmed and committed transportation network.

3) A preliminary alternative must have independent utility.

4) A preliminary alternative that requires new infrastructure must be able to conform to current, accepted engineering and safety standards, criteria, and practices.

The second step in the initial screening was a qualitative assessment of how well each preliminary alternative would meet the Proposed Project's purpose and need, and its related goals. A rating system was used to assign a value for each alternative's performance against each goal and to derive alternative-

specific composite values, on the basis of which the preliminary alternatives could be ranked in terms of each one's likely ability to address the Proposed Project's full purpose and need.

3.1.2.2 Initial Screening Results and Determination of Intermediate Alternatives

While the no-action alternative (similar to the "*Rehabilitation Alternative of the Existing Goethals Bridge*" pursuant to the Secretary of Interior's Standards for Rehabilitation) could obviously not satisfy many of the project goals, it was further evaluated and then dismissed in consultation with the New Jersey Historic Preservation Office (NJHPO) and the New York State Office of Parks, Recreation, and Historic Preservation (NYSOPRHP). (Details of such findings are provided in Appendix E.6.)

Based on the initial screening, it was determined that most of the preliminary new-crossing alternatives satisfied all four of the initial screening criteria but none could fully satisfy all of the project goals. The two single replacement bridge alternatives and two twin replacement bridge alternatives had the highest total scores (36 of a possible 40) in the ranking of alternatives relative to goals achievement. Even with total scores of 26 of a possible 40, the two parallel bridge alternatives (similar to the "*Modified Rehabilitation or Parallel Bridge Alternative*" pursuant to the Secretary of Interior's Standards for Rehabilitation) did not meet the initial criteria for current engineering and safety standards as the reconfiguration of the existing bridge would retain substandard emergency shoulders, and retrofitting could not fully incorporate recommended measures to protect against security threats. (Details of the initial screening results are provided in Section 4.0 of Appendix B as well as in Appendix E.6.)

Compared to the preliminary new-crossing alternatives, the other categories of preliminary alternatives (i.e., transit, travel demand management, and freight-movement) all had significantly lower total scores (either 14 or 16, of the total possible score of 40) related to the project goals. This reflects the inherent inability of these types of single-mode alternatives to respond to the Proposed Project's principal focus on addressing obsolescence, deficiencies and constraints of the existing bridge.

Following completion of the initial screening, the results were presented and discussed at meetings with the Study's Technical Advisory Committee (TAC), Environmental Task Force (ETF), and Stakeholder Committee (SC), which were held in March 2005. Based on comments received at those committee meetings and on the screening results, the following four intermediate alternatives were identified for further development and subsequent comparative screening[4]:

- *6-Lane Bridge Replacement South* – A new bridge would be designed and constructed south of, and roughly parallel to the existing structure, and the existing Goethals Bridge would be demolished. The new 6-lane bridge would provide: 12-foot-wide lanes, three in each direction; a 12-foot-wide right shoulder and a 5-foot-wide left shoulder in each direction; adequate overall bridge width to accommodate a sidewalk/bikeway and potential transit service.
- *6-Lane Bridge Replacement North* – Improvements with this alternative are similar to the 6-Lane Bridge Replacement South, above, but the new bridge would be designed and constructed north of, and roughly parallel to the existing structure.
- *Twin Replacement Bridges South* – Two 3-lane replacement bridges would be designed and constructed, one south of, and roughly parallel to the existing structure for eastbound traffic, and the second in the right-of-way of the existing Goethals Bridge for westbound traffic, following demolition of the existing structure. Each of the bridges would provide 12-foot-wide lanes and 12- and 5-foot-wide right and left shoulders, respectively. The westbound bridge would also

[4] The nomenclature and design concepts as listed below have been refined since these alternatives were first introduced and evaluated as part of the alternatives screening process. These refinements are discussed in Sections 3.2 and 3.3.

include a 10-foot-wide walkway/bikeway, and the two bridges would together provide sufficient width to accommodate potential transit service.

- *Twin Replacement Bridges North* – This alternative is similar to the Twin Replacement Bridges South, above, but with the first 3-lane bridge north of, and roughly parallel to the existing structure for westbound traffic, and the second in the right-of-way of the existing Goethals Bridge for eastbound traffic, following demolition of the existing structure. The walkway/bikeway would be on the eastbound bridge.

These intermediate alternatives were further defined at a concept level of detail sufficient for estimating their relative performance against each of the comparative screening criteria and associated evaluation measures.

3.1.3 Comparative Screening Criteria and Results

3.1.3.1 Comparative Screening Criteria

The intermediate alternatives were each evaluated independently against the following five criteria, derived from the project purpose and need and project goals:

1) An alternative should enhance mobility on the Goethals Bridge and its approaches in the future analysis year.[5]

2) An alternative should not result in deterioration of traffic conditions at other crossings or in the region in the future analysis year.

3) An alternative should enhance non-single-occupant-vehicle (SOV) commutation opportunities.

4) An alternative should seek to minimize potential adverse environmental effects.

5) An alternative should be capable of being constructed without extraordinary techniques, with feasible maintenance of existing transportation services during construction, and at reasonable cost comparable to other alternatives with similar benefits.

For each criterion, performance measures were identified. For the measures associated with the first four criteria (i.e., non-construction-related), the alternatives' performance was evaluated relative to the future No-Build condition to determine the likely change, positive or negative, that would occur with implementation of a given alternative, compared to not undertaking the Proposed Project. The results of the screening evaluation of each alternative were then compared to determine each alternative's relative ability, compared to other alternatives, to satisfy the criteria.

3.1.3.2 Comparative Screening Results and Determination of the Project Alternatives

The comparative screening results indicated that the four intermediate alternatives for bridge replacement would achieve the desired level of service[6] (LOS) improvement (i.e., LOS D) on the Goethals Bridge and

[5] It should be noted that at the time the Alternatives Screening Process was performed (2004 – 2006), the future analysis year (typically a date that is approximately 20 years after the anticipated date of construction completion) was assumed to be 2030, based on a then-estimated time of completion of 2010. However, as the study progressed, this future analysis year was revised to 2034 in order to reflect an updated and refined build year of 2014.

[6] Level of service (LOS), as defined by the Transportation Research Board, denotes traffic conditions and ranges from level "A" to level "F," where LOS A indicates free-flowing traffic conditions with high travel speeds and LOS "F" describes breakdown conditions with excessive congestion and delays. LOS "D" represents heavy traffic flow conditions without excessive delays

its approaches, and would result in fewer annual accidents, on average, than would occur in the future No-Build condition (i.e., without implementation of the proposed bridge replacement).[7] For many of the social, economic, and environmental factors considered in the comparative screening, the potential effects of the four bridge-replacement alternatives would be identical or very similar. For the remaining social, economic, and environmental factors, the potential effects differed somewhat among alternatives for specific measures, but did not collectively represent any given alternative as markedly better or worse than the others. (Section 6.0 in Appendix B provides details of the comparative screening and results.)

The estimated construction period for the bridge-replacement alternatives ranged from approximately 4.5 years for the southern 6-lane replacement bridge to approximately 6.5 years for the northern twin replacement bridges. The difference in construction durations among the alternatives was related principally to the estimated complexity of construction, including connection to the existing termini at New Jersey Turnpike Interchange 13 and the Staten Island Expressway, and the longer period required to construct two, rather than a single replacement bridge. The comparative construction costs showed the southern 6-lane bridge replacement at the lower cost range and the northern twin replacement bridges at the upper end of the range.

The results of the comparative screening were presented at meetings of the Study's TAC, ETF, and SC, as well as at two public open-house meetings in June 2006. Based on comments received at these venues and on the full set of findings and results of the comparative screening, it was recommended that none of the intermediate alternatives should be short-listed and that all four bridge-replacement alternatives should be advanced for detailed impact evaluation in this EIS, including the two 6-Lane Bridge Replacement Alternatives (both South and North) as well as the two Twin Replacement Bridges Alternatives (both South and North), as detailed above in Section 3.1.2.2. In addition, given public interest in enhanced transit services in the Goethals Bridge corridor and the broader New York/New Jersey region, it was recommended that the design of the bridge-replacement project alternatives should include sufficient width so as to not preclude potential future consideration and accommodation of transit, if future conditions should warrant it.

3.2 Post-Screening Refinements of Project Alternatives

3.2.1 Alignment Refinements due to Aviation Constraints

Following completion of the alternatives screening process described above, input obtained during the GBR EIS agency coordination and public outreach efforts resulted in the Port Authority making refinements to the alignments of the four bridge-replacement alternatives that had been identified and selected for further study via the screening process. Details of these alignment refinements are discussed below. It should be noted, however, that since the conceptual alignments of the refined alternatives remained largely the same as those of the intermediate alternatives that were assessed in the comparative screening phase of study, with generally similar impacts to those identified for the intermediate alternatives, the refinements to the project alternatives did not alter the screening process outcome.

The refinements to the project alternatives were precipitated by the Goethals Bridge's proximity to Newark Liberty International Airport, which is located approximately 3 miles north of the bridge. Given this proximity, the Port Authority, as project sponsor, submitted a completed Form 7460 (Notice of Construction or Alteration) to the Federal Aviation Administration (FAA) for review. In response to this

---

and is generally considered to be the minimum acceptable operating condition for urban areas. LOS "E" is defined as the theoretical capacity of a roadway, or the maximum stop-and-go flow of vehicles, given existing physical conditions. It is generally considered that LOS "E" and LOS "F" are below the threshold of acceptable operating conditions.

[7] The transportation benefits of the four bridge-replacement alternatives would be identical, due to the alternatives' uniform 6-lane capacity and design in accordance with current design criteria.

form, the FAA, which is a member of this Study's TAC, identified a potential concern with the 350-foot high towers originally proposed for the replacement bridge. The Port Authority then conducted its own aeronautical studies and held further discussions with the FAA and with representatives of the airlines operating at the airport to ascertain a tower height for the replacement bridge that would not pose a hazard to aviation height clearances.

As a result of the Port Authority's aeronautical studies and consultation process with the FAA and airport stakeholders, a maximum tower height of 272 feet above mean sea level (MSL) was established for the proposed Goethals Bridge Replacement to avoid conflict with flight departures from the airport. This decrease of 78 feet from the originally proposed maximum tower height of 350 feet above MSL, in turn, required redesign of the proposed bridge-replacement alternatives' main span towers. The decrease in maximum tower height is particularly relevant to a typical cable-stayed bridge design, as such changes in tower heights can result in roadway clearance interferences with the lowered angle of the cable stays.

Design studies that were undertaken to address the effects of the tower height decrease on the previously prepared conceptual bridge-replacement designs determined that the 272-feet maximum tower height required refinements to the bridge-replacement alternatives' alignments. The new design studies, while still conceptual, further determined that a single bridge configuration containing two decks separated by a set of bridge towers would be suitable for the alignments of all four bridge-replacement alternatives, instead of the two separate design concepts that had been advanced during the alternatives screening process (i.e., single replacement bridges south or north of the existing bridge's alignment, and twin replacement bridges within and directly south or north of the existing bridge's alignment). Therefore, the twin replacement-bridge alternatives north and south of the existing Goethals Bridge were eliminated from further consideration.

Following the design studies to refine the four conceptual bridge-replacement alternatives, the refinements were presented to and discussed with the Study's TAC and ETF at a September 2007 meeting, which was scheduled specifically for this purpose. Both the TAC and ETF had been involved in the review of the alternatives screening process, results, conclusions, and recommendations of the original bridge-replacement alternatives. The meeting with the TAC and ETF regarding the refined alternatives included: discussion of the underlying airport-related impediments to the previously assumed maximum tower height and associated design concept modifications; comparison of the refined alternatives' alignments to the alignments of the four original bridge-replacement alternatives, via visual displays of overlay mapping of the original and corresponding refined alignments; and the screening results for the four refined alternatives using the same basic criteria and evaluation measures as were previously used in the alternatives screening process.

With the input received from the TAC and ETF review of the refined alternatives, the USCG concluded that the refined alternatives are consistent with the recommendations of the alternatives screening process and are appropriate for continued detailed evaluation of the Proposed Project's potential social, economic and environmental impacts. To that effect, and since the refined alternatives are based on one type of design concept (i.e., a single bridge configuration containing two decks separated by a set of bridge towers) instead of the two separate design concepts originally studied in the alternatives screening process (i.e., bridge replacement and twin bridges replacement), the nomenclature of the four refined alternatives has been modified from those for the alternatives identified in the alternatives screening process. Therefore, the four project alternatives evaluated in this EIS were renamed using the following nomenclature:

- *New Alignment South* – a single-span bridge replacement in an alignment directly south of the existing Goethals Bridge;
- *New Alignment North* – a single-span bridge replacement in an alignment directly north of the existing Goethals Bridge;

- *Existing Alignment South* – a single-span bridge replacement in an alignment within and extending south of the existing Goethals Bridge alignment; and
- *Existing Alignment North* – a single-span bridge replacement in an alignment within and extending north of the existing Goethals Bridge alignment.

3.2.2 Consideration of a Second Bridge Design Option

Following the development of the refined alignment alternatives described above, the Port Authority considered for a period of time, a tied-arch design option in addition to the original cable-stayed design option. This design option was introduced for further study as a possible approach for complying with the aviation height constraint in a different manner than using the cable-stayed design with its two towers. However, as the design studies of this alternate design option progressed, the Port Authority concluded that the cable-stayed design option continued to be the most efficient bridge type, given construction complexity and cost as well as other engineering and maintenance factors. For example, a tied-arch design option for the New Alignment South is estimated to have a construction cost that is $170 million dollars greater than a cable-stayed design option and $400 million more in total project cost due to the cost of materials[8]. In addition, a tied-arch design option was found to be structurally less redundant, which would likely make it more vulnerable in terms of safety and security needs[9] than a cable-stayed design. Given the current site's physical characteristics and geographical location, the constructability of a tied-arch bridge would also be more complex whereas it would take approximately six months longer and require more waterway channel closures and airspace restrictions during construction. For all of these reasons, the Port Authority decided not to further pursue a tied-arch design option for the Goethals Bridge Replacement.

3.2.3 Consideration of Temporary and Permanent Access Road Options

During the conceptualization for a Goethals Bridge Replacement, a construction access road was included to facilitate the efficient construction of the bridge. The road would be located generally beneath the bridge, with temporary finger roads branching out from the main road to enable pier construction to occur. The construction access road would be in place for approximately four years, after which time the width of the access road would be reduced by approximately 30% to provide maintenance and security access on a permanent basis. Given such modification and adaptation of the construction access road for maintenance and security access on a permanent basis, the proposed Goethals Bridge Replacement would then provide the same level of maintenance and security access as the other three Port Authority bridges (i.e., George Washington Bridge, Bayonne Bridge and Outerbridge Crossing), all of which have paved access roads for maintenance and security purposes. During the U.S. Army Corps of Engineers' Section 404 permitting process, as well as the New Jersey and New York environmental permitting processes for the Proposed Project, the Port Authority will develop a complete alternatives analysis to demonstrate that: 1) wetland impacts associated with the access road have been avoided to the maximum extent practicable; 2) the area of unavoidable wetland impact has been minimized to the maximum extent practicable; and 3) appropriate mitigation measures are proposed and would be implemented to offset the impacts.

On the existing Goethals Bridge, maintenance and inspections are conducted with a combination of snooper trucks, under-bridge catwalks, temporary roadways, barges and visual assessments using binoculars. Snooper trucks can provide access to the outside edges of the bridge, but require the short-

[8] A steel superstructure for a tied-arch design option would have approximately 1 million more square feet of steel surface than for the cable-stayed design option. Such steel superstructure would need to be imported from foreign sources and it would ultimately cost significantly more for long-term maintenance (including painting) than the cable-stayed design. In addition, a steel superstructure would aesthetically require more lighting than a cable-stayed design option.

[9] A tied-arch design option, with a large steel superstructure compared to more concrete superstructure for a cable-stayed design option, would have greater fire risks as steel melts and concrete does not melt.

term closure of one of the two lanes of traffic. Catwalks are located on the underside of the bridge and provide an arm's length access. The existing bridge's two piers are located in the water and on land, and are accessible by watercraft and the existing access road near the former Cory Warehouse boat slip in New Jersey. To gain access to the underside of the existing bridge not accessible by the catwalks, temporary roadways must be constructed on the wetlands and upland areas, which requires a lengthy permitting process, and is limited to a timeframe of approximately three weeks, to limit environmental consequences.

Acknowledging that bridge inspection and maintenance requirements on the existing Goethals Bridge could not be applied to a new bridge, the Port Authority has conducted a preliminary examination of the use of a temporary access road versus use of a permanent access road. This examination, which is presented below, included: 1) consideration of the compatibility of a either a temporary or permanent access road with the overall Purpose and Need for the Proposed Project; 2) consideration of the principal bridge inspection and maintenance alternatives available to the Port Authority; 3) preliminary evaluation of the alternatives in terms of environmental and other considerations; and 4) identification of the concept design utilized in this EIS.

3.2.3.1 Compatibility of the Access Road with the Proposed Project's Purpose and Need

As indicated in Section 2.0, the needs and associated goals for the Proposed Project include, among others, the following:

- Enhance the structural integrity of the bridge
- Improve traffic service
- Provide transportation system redundancy
- Minimize environmental consequences

As further demonstrated below, the ability to facilitate a bridge inspection, maintenance and repair program as part of the Proposed Project which guarantees the structural integrity of the bridge, does not conflict with traffic flow, provides security for system redundancy, and minimizes environmental impacts to the maximum extent practicable, is critical to the success of the project; it is also compatible with the ability of the Proposed Project to achieve its overall Purpose and Need. In this regard, a permanent access road is proposed not only to support construction, maintenance and security activities, but also to incorporate current accepted standards for facility security policy and procedures. The compatibility of a permanent access road with the several needs and goals for the Proposed Project are presented below.

Structural Integrity

The goal of enhancing the structural integrity of the Goethals Bridge focuses on reducing escalating maintenance and emergency repair costs and providing a bridge crossing that meets current structural and seismic standards.

The Port Authority operates, maintains and ensures the security for four bridges between New York and New Jersey, all of which have some sort of underside access. In 2000, the Port Authority obtained permits to pave the access roads under the Bayonne Bridge and Outerbridge Crossing. The Bayonne Bridge is accessible via city streets and an underbridge pier side access road. For the Outerbridge Crossing, the piers are accessible by watercraft and the approaches are accessible from a combination of local roads and an underbridge pier side access road. Access to the George Washington Bridge is via the local roadway network and access rights agreements with the parks on either side of the Hudson River. The Goethals Bridge remains the only bridge operated by the Port Authority that has impeded underside access, which

results in increasing maintenance and emergency repair costs and impairing response to traditional and security related incidents by emergency personnel.

On the New Jersey side of the existing Goethals Bridge, access is available via local roads and an access road adjacent to the former Cory Warehouse boat slip. On the New York side, the Goethals Bridge is accessible between the R.T. Baker property and the Toll Plaza via a combination of local roads and an underbridge access road. Beyond the R.T. Baker site, the Port Authority has an agreement with state and federal agencies allowing maintenance access to the bridge by foot as long as no vehicles enter the property. For more comprehensive maintenance and repairs, the Port Authority applies for permits to lay down a temporary road for underbridge access. The permit process typically takes six months for a 3-week timeframe. In an emergency situation that requires vehicle access, a permit would still need to be acquired.

The proposed Goethals Bridge Replacement would have a longer span than the existing bridge such that the New York pier would no longer be in the water. It is the area between the R.T. Baker property and the Arthur Kill that would especially require a means of permanent access to reduce maintenance, emergency repair costs and response to traditional and security related incidents by emergency personnel, thereby improving the Port Authority's ability to secure the bridge.

Traffic Service

The proposed Goethals Bridge Replacement would increase the number of lanes in each direction from two to three lanes, plus full-width shoulders. These elements would result in significant improvements to traffic service in the corridor. Continued use of the existing maintenance program on the replacement bridge would require the use of snooper trucks and attenuator trucks, with cones and outriggers placed in the shoulders and roadways, thereby resulting in traffic restrictions during maintenance, and could only be applied on the south side of the bridge due to the proposed walkway / bikeway on the north side. While bridge maintenance would be conducted during the nighttime and off-peak hours and maintenance vehicles would primarily utilize the shoulders, some traffic impacts would still result. Maintenance from an access road below the bridge, however, would not affect traffic service at all, thereby allowing full compatibility of long-term bridge maintenance with the Proposed Project's need and the Port Authority's goals for improving traffic service on the bridge.

Transportation System Redundancy

The importance of the bridge to the local and regional transportation network infrastructure requires that measures be taken to ensure the security of the bridge. The Port Authority, as the project sponsor, is especially mindful of the need for security in the post-9/11 environment. In addition to its traditional transportation role, the Goethals Bridge is a vital and designated link for the transport of military hardware and personnel in the event of a regional or national event or emergency. Therefore, an additional post-construction function of the access road would be to serve as one of the mechanisms that would be used to ensure the security of the bridge. In addition to the security lighting and CCTV monitors, emergency access to the bridge piers and footings is needed to respond to security investigations.

Minimize Environmental Consequences

One of the goals established for the Proposed Project is to serve projected future traffic needs and access while minimizing adverse environmental impacts to the maximum extent feasible and practicable. Access to the bridge facilities for maintenance and inspection would be significantly constrained by the environmentally sensitive resources located under the bridge. Large sections of the bridge, particularly on the New York side, would be built over wetlands and shallow water areas. The temporary construction access road, which would be wider than a proposed permanent access road, would be constructed in

wetland areas. Through early coordination efforts with the U.S. Army Corps of Engineers and the New York State Department of Environmental Conservation, wetlands impacted by the temporary (approximately 4-year long) construction access road would be considered permanent wetland impacts. After construction is complete, the access road would be reduced in width from approximately 36 feet to 20 – 24 feet to facilitate maintenance and security requirements. All finger roads that are proposed to branch out from the main access road in order to provide construction-period access to the several piers to be constructed in wetlands will also be removed after bridge construction is complete. The intent of this access road width reduction and finger road removal is to minimize long-term environmental consequences to the maximum extent practicable and feasible.

3.2.3.2 Inspection and Maintenance Alternatives Considered

Bridge inspection and maintenance alternatives evaluated in this section include use of the existing maintenance program and the use of a permanent access road.

Existing Maintenance Program

Continuing with the existing Goethals maintenance/inspection practices, the effectiveness of snooper trucks would be limited. Given the width of the proposed bridge and the cantilever design and reduced weight bearing capacity of the bicycle and pedestrian path on the north side of the bridge, snooper trucks would be precluded from use on the north side. The center section of the bridge, which is being designed for future transit service, would not include platforms; therefore, no maintenance access from that location would be possible. While the use of traveler platforms over the waterways will be considered as an alternative to maintenance by barges, traveler platforms along the approach spans have not been considered due to the excessive capital and maintenance costs. The existing roadways in the New Jersey portion and in New York to the east of the R.T. Baker site would still be used for maintenance and inspection purposes.

As the replacement bridge piers would not be built in the waterway (except possibly on the New Jersey side where pier placement may occur within the former Cory Warehouse boat slip), watercraft access does not apply. Bridge maintenance would still require access from below, either through the existing access approvals or on new temporary roadways. Due to the long lead times required to obtain permits to install temporary roads over wetlands, major emergency repairs of the bridge would be difficult to conduct.

Permanent Access Road

The potential alignments of the access road for each of the four project alternatives being evaluated are presented later in this section. The length of the access road is proposed to be approximately 2,200 feet between Gulf Avenue and the Arthur Kill. The width of the road necessary for construction purposes would be approximately 36 feet, not including the proposed fingers. This width is needed for construction in order to allow one lane of large construction vehicular traffic to pass freely around the extended outriggers of a standard construction crane. Based on the mode selected for the access road, upon completion of the bridge, the width of the permanent road could be reduced to 20 – 24 feet and all construction fingers would have been removed and their areas restored.

Two basic modes of construction of the access road have been evaluated and, within one of the modes, two construction methods have been evaluated. The first mode evaluated is to construct the road on fill, the material used for the access road that runs along a portion of the existing Goethals Bridge. This mode is commonly used for temporary access roads because it is safe, easy to construct, relatively inexpensive, and provides an ultimately reversible (i.e., the fill can be removed and the area restored) way to access a site. It can also be used for permanent structures.

- The first construction method evaluated for fill placement is the traditional method of placing fill with side slopes of 3:1 (assuming that sand and gravel would be used). The second construction method evaluated for fill placement was to use either sheet piling or a geogrid wall to restrict the fill area to the roadway area. No side slopes or other support would be necessary if sheet piling were used. However, either gabion baskets or minimal side slopes could be used to provide additional support for a geogrid wall, if necessary.

- The second mode of construction evaluated is to build the road on piles, i.e. similar to the way in which a causeway or trestle would be constructed. Using this mode of construction, sections of the road crossing upland areas would, if necessary, be raised to the same level as those sections crossing wetlands.

Regardless of the construction alternative selected for most of the access road, the portion crossing Old Place Creek would be on piles (i.e., no fill would be placed in Old Place Creek) and would provide minimum vertical and horizontal navigational clearances for small recreational boats such as kayaks and canoes.

3.2.3.3 Evaluation of Alternatives

Having established the potential alternatives available to the Port Authority to undertake inspection and maintenance, the next step was to evaluate those alternatives. Wetland impacts would be the predominant effect of the construction of a temporary or permanent access road for the Proposed Project. The areas of impact associated with each of the four alignment alternatives, including an associated access road, were computed as discussed and presented in detail in Section 5.13. The impact areas given are a maximum based on the road width and side slope areas necessary for construction purposes.

Existing Maintenance Program

Under the existing condition, wetlands impacted by the temporary construction access road would be considered permanent by the regulatory agencies. Under this condition, wetland mitigation could include the creation and/or enhancement of wetlands either onsite, offsite or both. The Port Authority would continue to access the bridge for minor maintenance needs using the existing state and federal agreements in place, and would need to obtain other permits for temporary access roads for major maintenance purposes.

Permanent Access Road

The access road would have variable levels of wetland impacts, depending on the actual design used. The traditional fill-constructed roadway would impact the greatest amount of wetlands. The sheet piles or geogrid wall would reduce the wetland impacts due to the elimination of the side slopes. The construction of a road on piles would result in the least amount of wetland impacts, as only the piles would impact wetlands. Under this construction method, the entire wetland area would not be segmented by the placement of a barrier (fill roadway), but the wetlands would be subject to increased shading.

Similarly, the different access road designs would have varying levels of capital and maintenance costs. The traditional fill option would be the least expensive, and would require the addition of fill on an annual basis. The sheet piling fill option would be approximately twice as expensive as traditional fill. Constructing the access road on a trestle would be the most expensive; approximately four times the cost of traditional fill.

Upon selection of a preferred alignment alternative and initiation of the Section 404 and state permitting processes, the design of the access road will be further refined and the impacts associated with each access road alternative will be quantified accordingly. At that time, a complete alternatives analysis

pursuant to the requirements found at Title 40 of the Code of Federal Regulations (CFR), Part 230, which governs the selection of sites for placement of fill material pursuant to the Section 404(b)(1) Guidelines, will be prepared. The analysis will address the alternative modes noted above in light of: 1) fulfilling the basic project needs and goals; and 2) being available and feasible based on cost, technology, and logistics (i.e,. whether the alternative proposed will meet the requirement of the practicable alternative test set forth in 40 CFR Part 230.10(a) and the test of practicability set forth in 40 CFR Parts 230.3(q) and 230.10(a)(2)). Regardless of the construction method proposed for the access road, the Section 404(b)(1) Guidelines evaluation must demonstrate that: 1) wetland impacts have been avoided to the maximum extent practicable; 2) the area of unavoidable wetland impact has been minimized to the maximum extent practicable; and 3) appropriate mitigation measures are proposed and would be implemented. It is anticipated that the findings of such analysis will also be summarized in the Final EIS.

3.2.3.4 Evaluation of Access Road Alternative in the EIS

Given that the effectiveness of maintenance activities on the existing bridge is limited with the use of snooper trucks, and that the Proposed Project would move the New York pier from the Arthur Kill to the adjacent shoreline, the current Goethals Bridge maintenance/inspection practices would not apply to a replacement bridge. Further, the lack of an access road limits the ability of the Port Authority to respond to emergency or security events.

Therefore, a permanent construction, maintenance and security access road was advanced for detailed evaluation in this EIS. As the specific design of the access road has yet to be selected, the traditional construction method, with fill at a 3:1 slope, was used for evaluation of the potential impacts of the access road in this EIS. The use of this concept design in the EIS ensures that the worst-case impacts are considered in accordance with National Environmental Policy Act (NEPA) environmental documentation guidance.

3.3 Description of No-Build and Build Alternatives

The remainder of this section identifies and describes the Proposed Project alternatives that have been evaluated in detail in terms of impacts and, as appropriate, mitigation (see Section 5.0, *Environmental Consequences*). These include the *No-Build Alternative* as well as the four bridge-replacement alternatives which are henceforth referred to in this EIS as the *Build Alternatives*. Two of the Build Alternatives entail the construction of a replacement bridge on new alignment located either completely to the south or north of the existing bridge, while two other Build Alternatives entail the construction of a replacement bridge within an alignment that incorporates the existing Goethals Bridge alignment and also extends either to the south or north of the existing alignment. In the remainder of this section, these alternatives are grouped by alignment type whenever appropriate, and are generally referred to as the *New Alignment Alternatives* and the *Existing Alignment Alternatives*, respectively. The two New Alignment Alternatives are the *New Alignment South* and the *New Alignment North*. Similarly, the two Existing Alignment Alternatives are the *Existing Alignment South* and the *New Alignment North*.

The No-Build Alternative and the four Build Alternatives for a cable-stayed design option are described below, with the No-Build Alternative discussed first, followed by the two New Alignment Alternatives (South and North) and then the two Existing Alignment Alternatives (South and North).

3.3.1 No-Build Alternative

The No-Build Alternative (also referred to as the "No-Action Alternative" in Section 3.1.1.1) represents conditions in the future analysis year of 2034, absent implementation of the proposed Goethals Bridge

Replacement.[10] It provides the future baseline against which anticipated effects of the Build Alternatives are compared to identify any significant project-related impacts.

The No-Build Alternative assumes that operation and maintenance of the Goethals Bridge and approach roadways would continue in order to maintain this critical crossing in the interstate highway network. As the existing bridge was designed to accommodate the lighter vehicle weights of the early 20th century, an increase in vehicle weights would continue to adversely affect the condition of the riding surface, deck slab and deck joints of the structure. By 2014 or 2015, the existing structure would require, at minimum, a full deck replacement and retrofit procedures for seismic upgrade.

It is expected that by 2034, the structural elements of the then-106-year-old Goethals Bridge would have changed little other than through aging and necessary repairs to maintain its structural integrity. The 7,413-foot-long structure comprises a 1,152-foot-long main span flanked by 3,126 feet of approach spans on Staten Island and 2,831 feet of approach structure in New Jersey. Two sidewalks, which are currently not accessible to pedestrians, would likely remain closed due to security and safety considerations. At the maximum elevation of its superstructure trusswork, the height of the Goethals Bridge is about 238 feet above mean sea level. Its navigational clearances of about 135 feet (above MHW) vertically and about 600+/- feet horizontally between piers (including the eastern pier located in the Arthur Kill, at the edge of the navigable channel) would also remain unchanged.

The bridge deck, 62 feet, 1⅝ inches wide on the main span section and 53 feet, 0 inches wide on the approach spans, would continue to provide for four lanes of traffic on a 42-foot-wide roadway, with a curb-to-curb width in each direction of traffic of 10 feet for each of two lanes. The narrow lanes would impede vehicular traffic at times due to tractor-trailers and larger trucks that would exceed the lane widths, thereby reducing operating efficiency in each direction of the bridge. As today, there would be no shoulders to accommodate traffic incidents, vehicle breakdowns, or other emergencies that disrupt traffic flow, such that existing safety and operational constraints would remain.

In addition to considering the condition of the existing Goethals Bridge, the No-Build Alternative also considers all other programmed/committed transportation and land use development projects as well as planning initiatives that have the potential to be implemented by 2034, the future analysis year considered in this EIS. These projects and planning initiatives that would occur within the vicinity of the Goethals Bridge are described in detail in Section 4.4.6, while all the others within the region are described in Appendix C. These projects and planning initiatives have been considered in the projections of future No-Build conditions evaluated throughout Section 5.0 of this EIS. While some of these projects would improve regional or local mobility and goods flow, others would affect traffic demand at the Goethals Bridge and in its corridor, further constraining mobility and exacerbating the bridge's functional and physical obsolescence.

The programmed/committed transportation and land use development projects nearest to the Goethals Bridge (see Section 4.4.6) include:

- The Jay Cashman Dredged Material Processing Facility in Elizabeth, NJ;
- The Howland Hook Redevelopment Program in Staten Island, NY;
- The New York Container Terminal (NYCT) Eastbound Ramp Access Improvement in Staten Island, NY;
- The Old Place Creek Site Access in Staten Island, NY;
- The West Shore Expressway Corridor/Service Road Improvements in Staten Island, NY;
- The Arthur Kill Channel Deepening Program, NJ and NY.

[10] Consistent with NEPA's environmental reviews for a project under its build conditions, the no-action alternative, which represents future baseline conditions without the project, is carried through the alternatives screening process in order to allow comparisons against the future no-build conditions.

Near the Goethals Bridge, there are also several planning initiatives, including:

- An as-of-right development at the former GATX property (i.e., previously the site of the proposed NASCAR racetrack and ProLogis warehousing, neither of which ever reached fruition) in Staten Island, NY;
- The reconstruction of West Shore Expressway (WSE) / Staten Island Expressway (SIE) Interchange in Staten Island, NY;
- The NJ Turnpike Interchange 13 Reconfiguration Study in Elizabeth, NJ;
- The Portfields Initiative, including some locations in both Linden and Elizabeth, NJ;
- The Missing Link Study for US Route 1 & 9 and I-278 Interchange in both Linden and Elizabeth, NJ.

When combining the effects of these nearby projects and planning initiatives, increases in traffic volumes would be expected by 2034 from these developments, resulting in worsening traffic conditions at the Goethals Bridge and its corridor in the peak commuting periods and in both directions of travel, as well as a higher incidence of accidents. All of these nearby transportation and land use development projects, whether programmed/committed or planning initiatives, are considered to be part of the Proposed Project's No-Build scenario in the year 2034.

Within the broader New York/New Jersey region, projects and planning initiatives that have progressed sufficiently to be likely to be completed by 2034 were also identified through investigation and review of current planning and project development activities. Other regional projects and planning initiatives not included in the definition of the future No-Build Alternative have also been identified in order to characterize the planning context within which the proposed Goethals Bridge Replacement is being considered. All of the regional projects and planning initiatives are listed in Appendix C.

3.3.2 New Alignment South

The New Alignment South proposes replacement of the Goethals Bridge with a new six-lane structure directly and entirely south of the existing bridge's alignment (see Figure 3.3-1). The new bridge crossing would be constructed first, with traffic maintained across the existing Goethals Bridge, after which the existing crossing would be demolished. Specific elements of this alternative, discussed from west to east, are described below.

New Jersey Alignment. The western terminus of this alternative begins in Elizabeth, approximately 600 feet west of the New Jersey Turnpike mainline near the Interchange 13 ramps. At the crossing of the Turnpike mainline, the new structure would begin to shift to the south with sufficient width to accommodate the additional lanes and shoulders that are proposed. At a point approximately 700 feet east of the Turnpike mainline, where the new approach structure would cross over the Staten Island Railroad (SIRR) trestle, the alignment would be entirely to the south of the existing Goethals Bridge approach structure. From that point eastward to the Arthur Kill, the northern edge of the new approach structure to the bridge would be located close to, and entirely south of the existing structure. This alignment would pass directly over the Krakow Street residential neighborhood and several businesses. Foundation piers would be constructed intermittently along the entire length of the structure to the western pier of the main bridge span, to be located at the edge of the Arthur Kill in an intertidal basin (former boat slip) immediately to the north of the Bayway Industrial Center. The new bridge would also cross the Arthur Kill on a new alignment that closely parallels to the south of the existing bridge alignment.

New York Alignment. At the eastern shoreline of the Arthur Kill, the new main bridge span would similarly be close, but entirely to the south of the existing Goethals Bridge. This alignment would avoid placement of the eastern pier supporting the main bridge span in the Arthur Kill. The alignment would then continue entirely on elevated structure, crossing Old Place Creek and some business properties to a

point just west of Gulf Avenue at its western terminus and intersection with Western Avenue, at which point the approach roadway would begin to curve northward to meet the existing alignment. After crossing Gulf Avenue, which would be relocated along a portion of its length due to pier placement, the structure would tie into existing grade and meet the existing roadway and toll plaza. The foundation piers along this entire segment of the approach structure would be placed in both wetland and upland areas.

Right-of-Way. This alternative would require complete or partial acquisition of (or easements for construction on) several properties in addition to those currently owned and maintained by the Port Authority. To that effect, a 50-foot-wide security buffer zone/right-of-way along both sides of the structure and approach roadways is proposed, including a permanent 8-foot high chain-link fence to be located approximately 25 feet from the outside edge of the new Goethals Bridge along the length of the project (except in open waters). The 50-foot buffer zone/right-of-way is measured at ground level from the point directly below the outside edge of the structure/approach roadways.

Bridge Structures. The proposed bridge would be an approximately 7,300-foot-long structure, comprising an approximately 2,700-foot approach on the west (in New Jersey) and an approximately 2,900-foot approach on the east (in New York), with an approximately 1,700-foot main span. The new 6-lane, single bridge configuration would provide 12-foot-wide lanes, three in each direction on separate roadway decks, with a 12-foot-wide right shoulder and a 5-foot-wide left shoulder in each direction. The overall bridge cross-section would provide a 10-foot-wide sidewalk/bikeway (on the north side, with a view toward the Arthur Kill Lift Bridge) and sufficient additional width between the westbound and eastbound roadways, so as to not preclude potential future transit use should future conditions warrant inclusion of transit on the Goethals Bridge crossing. The resultant total out-to-out width would be approximately 210 feet (i.e., about 148 feet wider than the approximately 62-foot-wide existing bridge with the No-Build Alternative). Figure 3.3-1 illustrates the New Alignment South's main-span cross section compared to that of the existing Goethals Bridge.

The bridge towers would have a maximum height of approximately 272 feet above mean sea level (MSL). Upon completion of the new bridge, the existing bridge would be demolished and removed.

Navigation. The main span would provide for a 900-foot horizontal clearance measured normal to the channel axis and a minimum 135-foot vertical clearance measured above mean high water (MHW). For this alternative (as well as for the other three alignment alternatives), the existing bridge pier and protective dolphins would be removed from the eastern edge of the navigation channel, and new piers would be constructed well outside the channel limits immediately upland of the eastern shore of the Arthur Kill. Maneuvering of vessels traveling to the Bayway refinery (located along the west shore of the Arthur Kill, south of the existing bridge) will no longer require avoidance of the protective dolphins as the vessel turns to starboard, making this maneuver easier to complete with the proposed new bridge replacement. The eastern pier is to be located outside the navigation channel along the Staten Island shoreline; a protective cell along the shoreline may be proposed for supplemental protection. This cell, if required, would be a stone-filled, steel sheet pile with a timber or rubber outside-rubbing surface, and would serve to protect the pier from any accidental vessel allisions (i.e., collisions between a moving body and a stationary object).

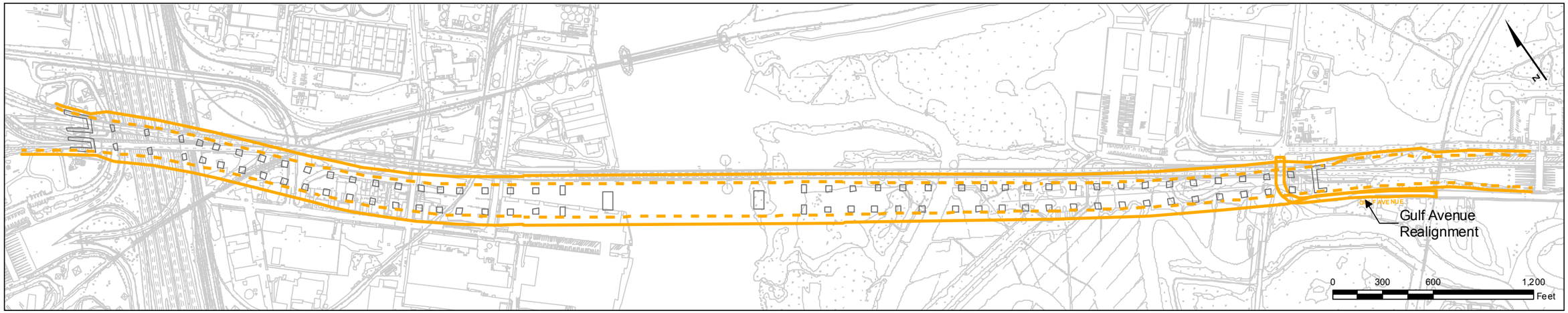

Legend

Alignments

- Buffer / Right - of - Way - New Alignment South
- Edge of Structure - New Alignment South

Bridge Structures

- Pier/Tower

New Alignment South

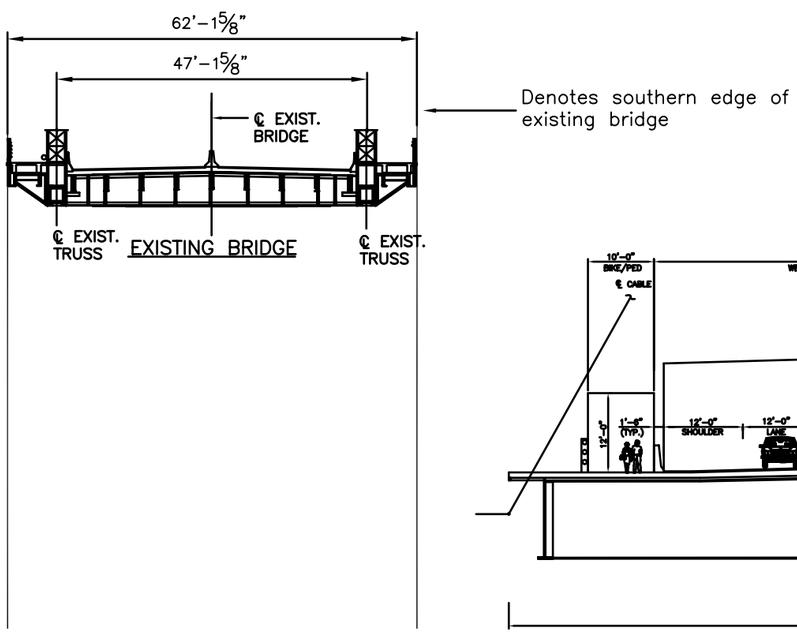

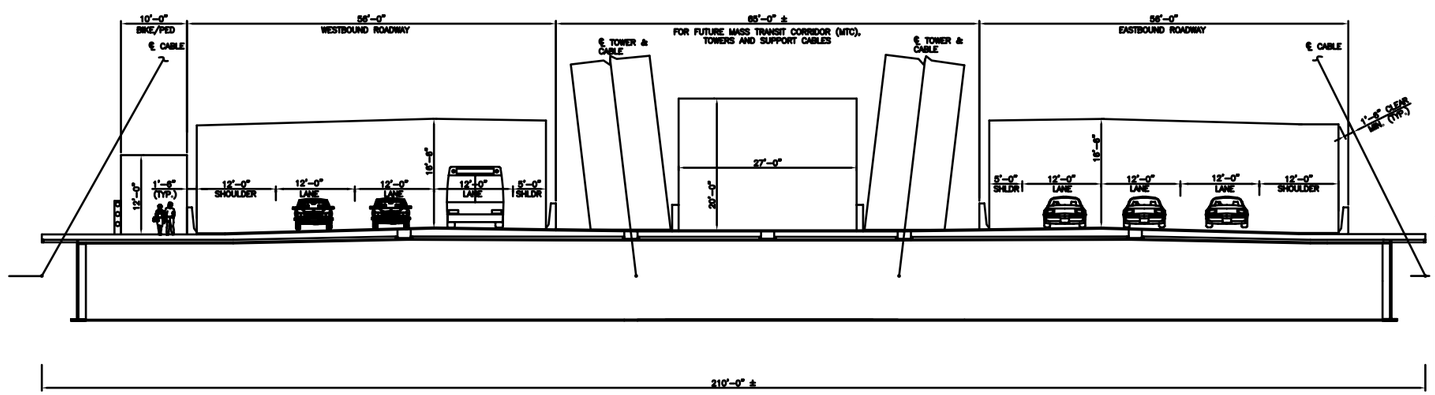

Notes:
1. Graphic indicates only horizontal relationship of proposed alignment to existing bridge alignment, since both would be at the same elevation.
2. Existing bridge to be demolished after the new replacement bridge is built.

Goethals Bridge Replacement EIS

FIGURE 3.3-1

New Alignment South:
Plan View and Cross-Section

United States Coast Guard

Provision for a Potential Mass Transit Corridor. In response to one of the project needs identified in Section 2.3.7 and one of the associated project goals as presented in Section 2.5, the Proposed Project would be designed so as to not preclude consideration of a potential transit corridor if and when future conditions and needs warrant the implementation of transit service across the bridge at some time in the future. In this regard, a central area has been conceptually designed between the eastbound and westbound roadway decks and their associated towers and support cables, to serve as a potential transit corridor for all four alternative alignments. The "reserved width" for this potential transit corridor would be approximately 27 feet wide. A cross-section of such reserved width on the bridge's main span for this alternative is shown in Figure 3.3-1.

Although neither the Port Authority nor any other agency currently has any specific transit plans for the foreseeable future, and although demand for a transit system across the Arthur Kill have not been demonstrated to be viable at this time, the concept design of the potential transit corridor extends to the Port Authority's property limits on either side of the New Jersey and New York approaches; by doing so, future tie-ins beyond those limits could be implemented if and when such a system is determined to be warranted. The 27-foot wide corridor between these property limits has been designed to provide sufficient clearances (both horizontal and vertical) to accommodate up to two express bus lanes or light rail tracks.[11]

Construction, Maintenance and Security Access. Access for inspection and maintenance activities would be provided through a combination of: 1) permanent access roads to be constructed on the New York side of the alignment generally below the replacement bridge and its eastern approach (see Figure 3.3-2), and 2) provisions designed into the main span structure. On the New York side, a permanent road would be constructed primarily on fill between the footings supporting the approach structure, although where the road crosses the open waters of Old Place Creek, it would be constructed on trestle. Also, the purpose of this permanent access road is to serve long-term bridge maintenance and security needs following its initial use for providing construction-phase access. On the New Jersey side of the alignment, and as an additional access mode for inspection and maintenance on the New York side, long-term access to the approach spans would either be from grade below the bridge or from truck-mounted snoopers; access for the main span would be by climbing and from a truck-mounted cherry picker; and access to the underside of the deck would be by truck-mounted snooper or by a traveler, which could be permanently mounted under the bridge, out of the navigation channel. A trestle system proposed along the Arthur Kill interpier basin (former boat slip) north of the Bayway Industrial Center on the New Jersey side would only be temporary for construction-access, and would be removed in its entirety at the end of construction. Long-term maintenance would follow normal construction procedures typical for a cable-stayed bridge, depending on the superstructure type (i.e., steel girder, pre-cast, pre-stressed concrete, or segmental concrete) to be ultimately selected.

During the short-term construction period, temporary finger roads branching out from the main access road would also be in place to facilitate pier construction; such finger roads would be removed at the end of the construction period. Similar to the main access road, most of the finger roads would be constructed on fill except where they cross open water, in which case they would be on trestle. The temporary finger roads are depicted in Figure 3.3-2.

Cost. The main span and approach span bridge costs were estimated by preparing concept-level designs of typical bridge elements and then using these concept-level designs to establish quantity estimates for major cost items such as concrete, structural steel, and excavation. These quantities were then multiplied by typical New York area unit costs for the items identified. For the highway items, square-foot takeoffs

[11] It is anticipated that a separate environmental review process would be required for implementation of an actual mass transit system at a time when more specific plans and logical termini beyond the Port Authority's property limits would be conceptualized based on future ridership forecasts that would warrant the implementation of such transit services.

developed during the project's preliminary alternatives analysis were multiplied by square-foot costs to estimate construction costs, and escalated to allow for mobilization and contingencies.

The estimated costs of construction of this alternative total approximately $755 million in 2007 dollars, including ancillary construction activities related to the demolition of the existing Goethals Bridge, local roadway modifications, and the replacement of the Travis Branch Railroad overpass. These costs, however, do not include right-of-way or maintenance of traffic, allowance for special access requirements in the wetlands, wetlands restoration, utility relocation, engineering, or administration.

3.3.3 New Alignment North

The New Alignment North proposes replacement of the Goethals Bridge with a new six-lane structure directly and entirely to the north of the existing bridge's alignment (see Figure 3.3-3). As with the New Alignment South, the new bridge crossing would be constructed first, with traffic maintained across the existing Goethals Bridge, after which the existing crossing would be demolished. Specific elements of this alternative, discussed from west to east, are described below.

New Jersey Alignment. The western terminus of this alternative begins in Elizabeth, approximately 600 feet west of the New Jersey Turnpike mainline near the Interchange 13 ramps. At the crossing of the Turnpike mainline, the new approach structure would begin to shift to the north with sufficient width to accommodate the additional lanes and shoulders that are proposed. At a point approximately 1,700 feet east of the Turnpike mainline, the new approach structure would be located entirely to the north of the existing Goethals Bridge approach structure. From that point eastward to and across the Arthur Kill, the southern edge of the new approach structure would be located close to, and entirely north of the existing structure. This alignment would pass directly over several business properties. Foundation piers would be constructed intermittently along the entire length of the structure to the western pier of the main bridge span, to be located on the site of a proposed dredged material processing facility, near the northern edge of an intertidal basin (former boat slip) to the north of the Bayway Industrial Center. The new bridge would also cross the Arthur Kill on a new alignment that closely parallels to the north of the existing bridge alignment.

New York Alignment. Near the eastern shoreline of the Arthur Kill, the new main bridge span would be close to, but north of the existing bridge. East of the new main span structure, the approach roadway would continue entirely on elevated structure lengthwise over a tributary to Old Place Creek, crossing a portion of New York Container Terminal at Howland Hook, a portion of the Coca-Cola distributorship property, and Texas Eastern and KeySpan metering stations, and requiring a relocation of Goethals Road North and a re-alignment of Gulf Avenue as well. The alignment would then shift southward to tie into the existing approach roadway just to the west of the Goethals Bridge toll plaza. The foundation piers along this entire segment of the approach would be placed in both wetlands and upland areas.

Right-of-Way. The right-of-way characteristics associated with this alternative would be similar to that described above for the New Alignment South.

Bridge Structures and Navigation. These elements of the New Alignment North would be as described, above, for the New Alignment South.

Provision for a Potential Mass Transit Corridor. The provision for a potential mass transit corridor associated with this alternative would be similar to that described above for the New Alignment South. A cross-section of such reserved width on the bridge's main span for this alternative is shown in Figure 3.3-3.

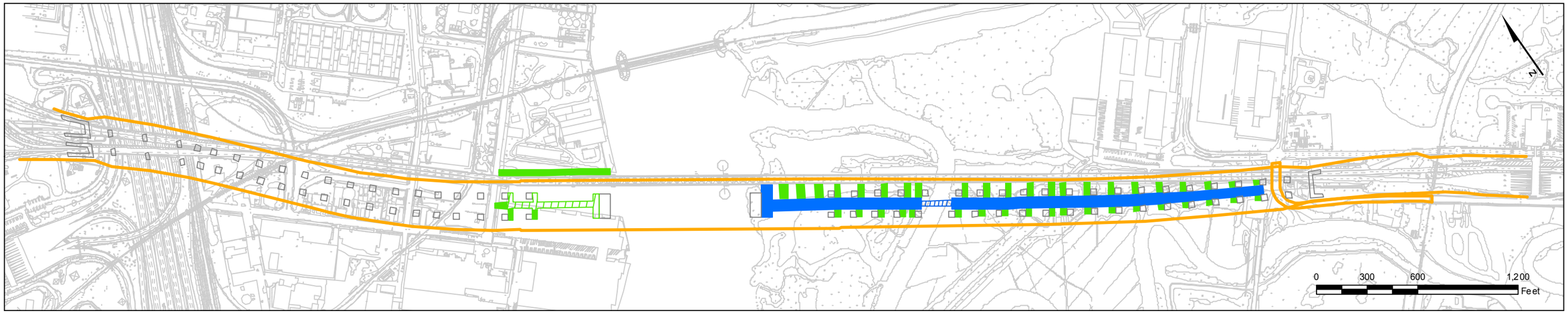

New Alignment South

Legend

Alignments

Right - of - Way New Alignment South

Bridge Structures

Pier/Tower

Permanent Roads for Construction/Maintenance/Security

On Fill

On Trestle

Temporary Fingers for Construction Only

On Fill

On Trestle

Goethals Bridge Replacement EIS

FIGURE 3.3-2

New Alignment South:
Proposed Access Road

United States Coast Guard

Legend

Alignments

- Buffer / Right - of - Way - New Alignment North
- Edge of Structure - New Alignment North

Bridge Structures

- Pier/Tower

New Alignment North

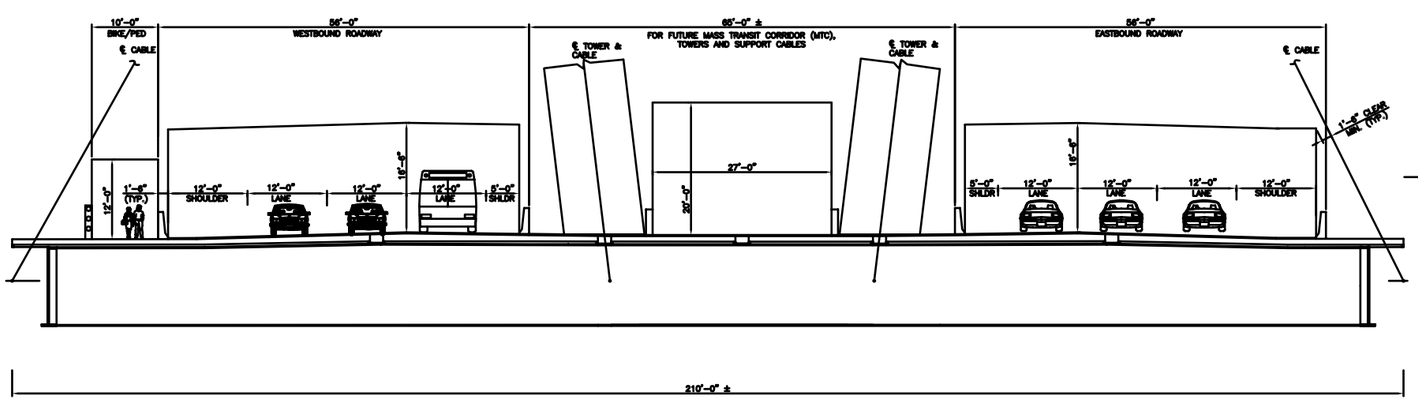

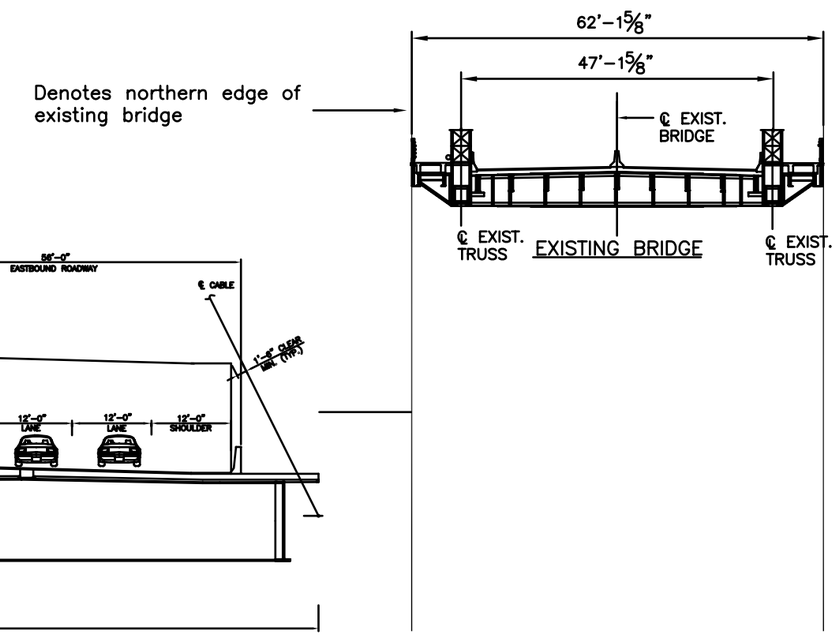

Notes:
1. Graphic indicates only horizontal relationship of proposed alignment to existing bridge alignment, since both would be at the same elevation.
2. Existing bridge to be demolished after the new replacement bridge is built.

Goethals Bridge Replacement EIS

FIGURE 3.3-3

New Alignment North:
Plan View and Cross-Section

United States Coast Guard

Construction, Maintenance and Security Access. Provision for long-term inspection and maintenance activities for this alternative would generally be the same as described above, for the New Alignment South, with the exception that the permanent access road on the New York side east of Old Place Creek may have to be located north of the proposed approach span, rather than beneath it (see Figure 3.3-4). This is due to the fact that a tributary to Old Place Creek would flow directly beneath the proposed replacement bridge. In addition to the permanent access road across Old Place Creek being constructed on trestle, several temporary finger roads across this tributary would exist on trestle during the construction period as well, which would then be removed at the end of the construction period.

One other difference in New Jersey between the access road for this alternative, and that for the New Alignment South, is the fact that no temporary trestle across the Arthur Kill interpier basin (former boat slip) on the New Jersey side would be required, since the bridge would be on land located to the north of the basin.

Cost. The same methodology used for estimating cost of construction for the New Alignment South was also used for this alternative. The estimated cost of construction of this alternative totals approximately $754 million, in 2007 dollars, including ancillary construction activities related to the demolition of the existing Goethals Bridge, local roadway modifications, and the replacement of the Travis Branch Railroad overpass. These costs, however, do not include right-of-way or maintenance of traffic, allowance for special access requirements in the wetlands, wetlands restoration, utility relocation, engineering, or administration.

3.3.4 Existing Alignment South

The Existing Alignment South proposes replacement of the Goethals Bridge with a new six-lane structure, one-half of which (i.e., the northern deck) would essentially be within the existing Goethals Bridge's alignment while the second half (i.e., the southern deck) would be adjacent to, and south of the existing alignment (see Figure 3.3-5). Employing a method known as half-width construction, the southern half of the new bridge that would be adjacent to the existing Goethals Bridge alignment would be constructed first. It would then temporarily accommodate both directions of traffic, with two lanes in each direction, during demolition of the existing bridge and construction of the northern half of the new bridge within the existing span's alignment. Following completion of all construction, the northern deck and the southern deck of the replacement bridge would each carry three westbound and three eastbound lanes of traffic, respectively.

New Jersey Alignment. The western terminus of this alternative begins in Elizabeth, approximately 600 feet west of the New Jersey Turnpike mainline near the Interchange 13 ramps. At the crossing of the Turnpike mainline, the new structure would begin to shift slightly to the south with sufficient width to accommodate the additional lanes and shoulders that are proposed. At a point approximately 700 feet east of the Turnpike mainline, where the new approach structure would cross over the Staten Island Railroad (SIRR) trestle, the alignment would be partially to the south of the existing Goethals Bridge approach structure. At the crossing of South Front Street, the northern deck of the replacement bridge would generally coincide with that of the existing bridge alignment and continue in that manner eastward to and over the Arthur Kill, while the southern deck would be entirely to the south of the existing structure. This alignment would pass directly over the Krakow Street residential neighborhood and several businesses. Foundation piers would be constructed intermittently along the entire length of the structure to the western pier of the main bridge span, to be located at the edge of the Arthur Kill in an intertidal basin (former boat slip) immediately to the north of the Bayway Industrial Center.

New York Alignment. The alignment would continue entirely on elevated structure, with the eastern pier of the main bridge span located near the shoreline of the Arthur Kill, but outside of the actual waterway. The northern deck of the replacement bridge would continue along the existing bridge alignment, while the southern deck would continue to parallel it immediately to the south. The western portions of the New

York approach spans would be constructed in wetlands associated with Old Place Creek, although no piers would be placed directly in the waterway. After crossing the western terminus of Gulf Avenue, which would be relocated along a portion of its length due to pier placement, the structure would tie into existing grade and meet the existing roadway and toll plaza. The foundation piers along this entire segment of the approach structure would be placed in both wetland and upland areas.

Right-of-Way. The right-of-way characteristics associated with this alternative would be similar to that described above for the New Alignment South.

Bridge Structures and Navigation. These elements of the Existing Alignment South would be as described, above, for the New Alignment South.

Provision for a Potential Mass Transit Corridor. The provision for a potential mass transit corridor associated with this alternative would be similar to that described above for the New Alignment South. A cross-section of such reserved width on the bridge's main span for this alternative is shown in Figure 3.3-5.

Construction, Maintenance and Security Access. Provision for long-term inspection and maintenance activities for this alternative would generally be the same as described above, for the New Alignment South. The access footprint and design of the access road and its temporary finger roads are depicted in Figure 3.3-6.

Cost. The same methodology used for estimating cost of construction for the New Alignment South was also used for this alternative. The estimated costs of construction of this alternative total approximately $804 million in 2007 dollars, including ancillary construction activities related to the demolition of the existing Goethals Bridge, local roadway modifications, and the replacement of the Travis Branch Railroad overpass. These costs, however, do not include right-of-way or maintenance of traffic, allowance for special access requirements in the wetlands, wetlands restoration, utility relocation, engineering, or administration.

3.3.5 Existing Alignment North

The Existing Alignment North proposes replacement of the Goethals Bridge with a new six-lane structure; one-half of which (i.e., the southern deck) would essentially be within the existing Goethals Bridge's alignment, while the second half (i.e., the northern deck) would be adjacent to, and north of the existing alignment (see Figure 3.3-7). This alternative would be constructed using the half-width construction method, as described above for the Existing Alignment South, though in mirror image (i.e., the northern half of the new bridge would first be constructed adjacent to the existing bridge and then used to accommodate both directions of traffic, with two lanes in each direction, during demolition of the existing bridge and construction of the southern half of the new bridge within the existing span's alignment). Following completion of all construction, the northern deck and the southern deck of the replacement bridge would each carry three westbound and eastbound lanes of traffic, respectively.

New Jersey Alignment. The western terminus of this alternative begins in Elizabeth, approximately 600 feet west of the New Jersey Turnpike mainline near the Interchange 13 ramps. After crossing the Turnpike mainline, the wider new structure, while wider than the existing bridge alignment, would straddle the existing bridge footprint so as to accommodate the additional lanes and shoulders that are proposed. At the crossing over South Front Street, the southern deck of the replacement bridge would generally coincide with that of the existing bridge alignment and continue in that manner eastward to and over the Arthur Kill, while the northern deck would be entirely to the north of the existing structure. This alignment would pass directly over several businesses. Foundation piers would be constructed intermittently along the entire length of the structure to the western pier of the main bridge span, to be

New Alignment North

Legend

Alignments

Right - of - Way New Alignment North

Bridge Structures

Pier/Tower

Permanent Roads for Construction/Maintenance/Security

On Fill

On Trestle

Temporary Fingers for Construction Only

On Fill

On Trestle

Goethals Bridge Replacement EIS

FIGURE 3.3-4

New Alignment North:
Proposed Access Road

United States Coast Guard

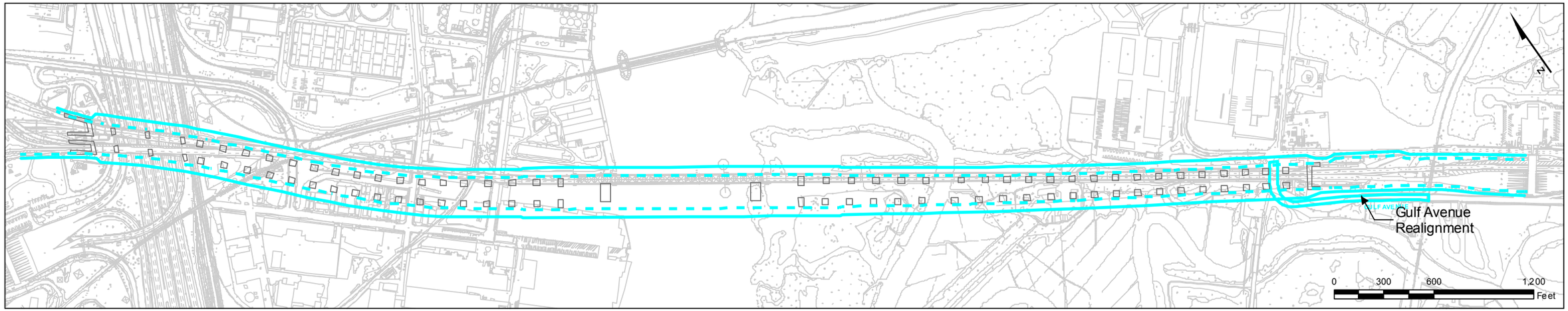

Legend

Existing Alignment South

Alignments

- Buffer / Right - of - Way - Existing Alignment South
- Edge of Structure - Existing Alignment South

Bridge Structures

- Pier/Tower

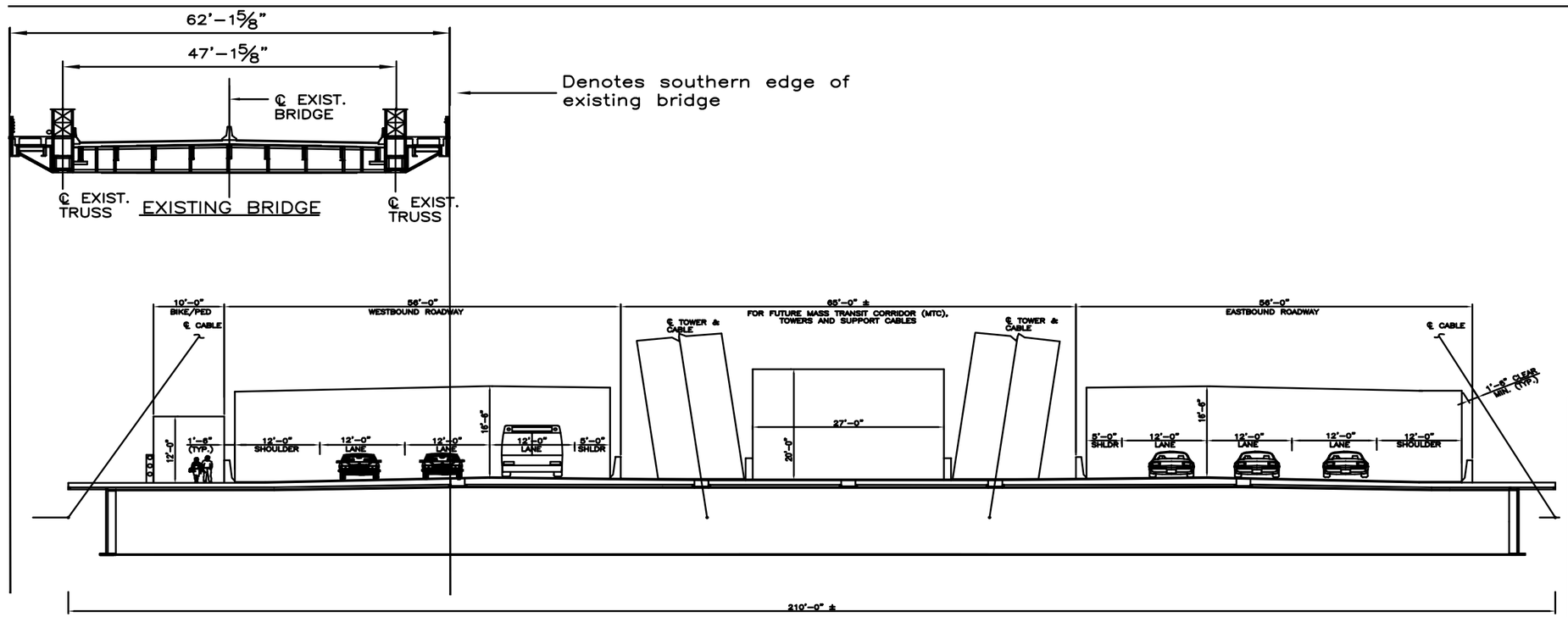

Notes:
1. Graphic indicates only horizontal relationship of proposed alignment to existing bridge alignment, since both would be at the same elevation.
2. Existing bridge to be demolished after half of the new replacement bridge is built.

Goethals Bridge Replacement EIS

FIGURE 3.3-5

Existing Alignment South:

Plan View and Cross-Section

United States Coast Guard

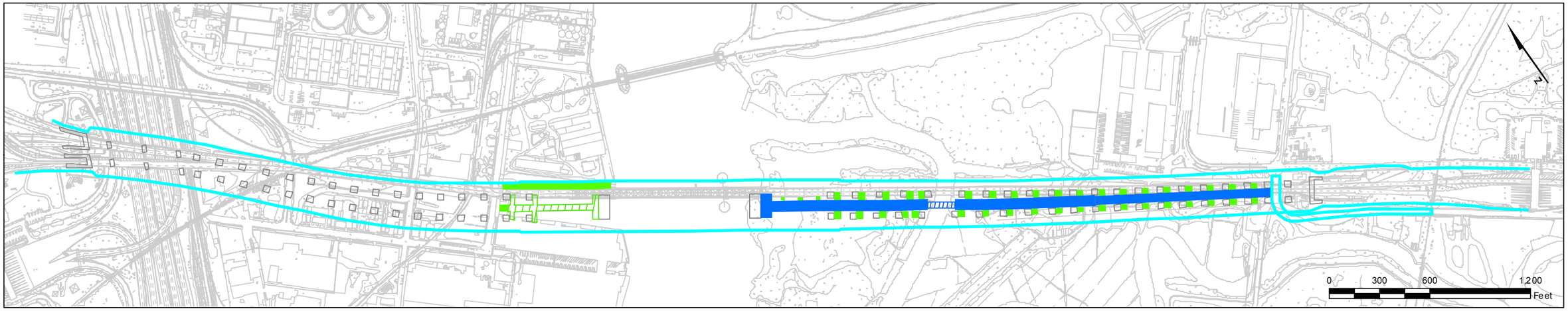

Existing Alignment South

Legend

Alignments

Right - of - Way Existing Alignment South

Bridge Structures

Pier/Tower

Permanent Roads for Construction/Maintenance/Security

On Fill

On Trestle

Temporary Fingers for Construction Only

On Fill

On Trestle

Goethals Bridge Replacement EIS

FIGURE 3.3-6

Existing Alignment South:
Proposed Access Road

United States Coast Guard

Legend

Alignments

- Buffer / Right - of - Way - Existing Alignment North
- Edge of Structure - Existing Alignment North

Bridge Structures

- Pier/Tower

Existing Alignment North

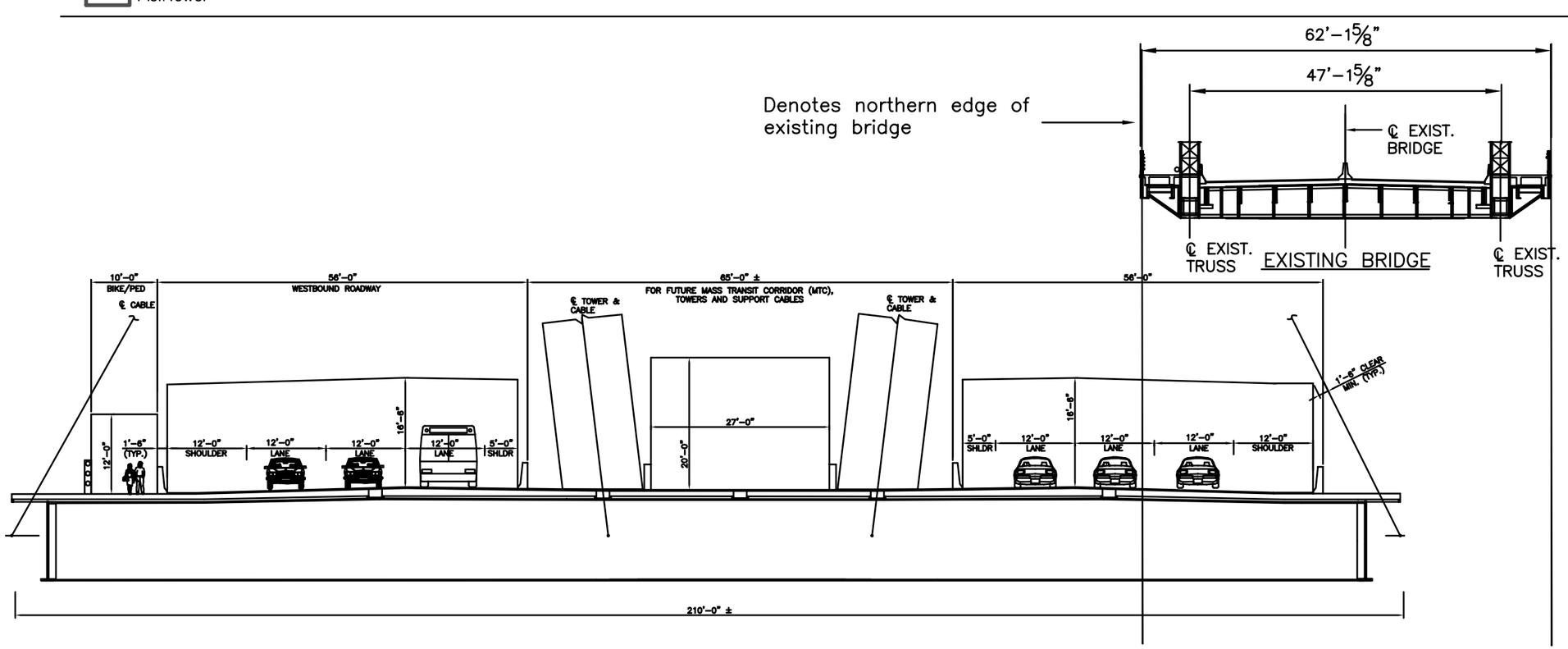

Notes:
1. Graphic indicates only horizontal relationship of proposed alignment to existing bridge alignment, since both would be at the same elevation.
2. Existing bridge to be demolished after half of the new replacement bridge is built.

Goethals Bridge Replacement EIS

FIGURE 3.3-7

Existing Alignnment North:
Plan View and Cross-Section

United States Coast Guard

located on the site of a proposed dredged material processing facility, near the edge of an intertidal basin (former boat slip) to the north of the Bayway Industrial Center.

New York Alignment. The alignment would continue entirely on elevated structure, with the eastern pier of the main bridge span located near the shoreline of the Arthur Kill, but outside of the actual waterway. The southern deck of the replacement bridge would continue along the existing bridge alignment, while the northern deck would continue to parallel it immediately to the north. The western portions of the New York approach spans would be constructed in wetlands and a tributary associated with Old Place Creek, although no piers would be placed directly in the waterway. After crossing Old Place Creek, the new structure would once again straddle the existing bridge alignment to its eastern terminus where it would tie into the existing approach roadway just to the west of the Goethals Bridge toll plaza. The approach roadway would continue across portions of several private and public properties, and would require a relocation of Goethals Road North and a re-alignment of Gulf Avenue as well. The foundation piers along this entire segment of the approach would be placed in both wetlands and upland areas.

Right-of-Way. The right-of-way characteristics associated with this alternative would be similar to that described above for the New Alignment South.

Bridge Structures and Navigation would be as described, above, for the New Alignment South.

Provision for a Potential Mass Transit Corridor. The provision for a potential mass transit corridor associated with this alternative would be similar to that described above for the New Alignment South. A cross-section of such reserved width on the bridge's main span for this alternative is shown in Figure 3.3-7.

Construction, Maintenance and Security Access. Provision for long-term inspection and maintenance activities for this alternative would generally be the same as described above, for the New Alignment South with the exception that the access road on the New York side, outside the wetlands, branches out into two segments in order to take full advantage of the unpaved road along the NYCT boundaries during the construction period (see Figure 3.3-8). The main access road, including the branched-out segment on the unpaved road, would be permanent while all finger roads would be temporary and removed after construction.

One other difference in New Jersey between the access road for this alternative and that for the New Alignment South, is the fact that no temporary trestle across the Arthur Kill interpier basin (former boat slip) on the New Jersey side would be required, since the bridge would be on land located to the north of the basin.

Cost. The same methodology used for estimating cost of construction for the New Alignment South was also used for this alternative. The estimated costs of construction of this alternative total approximately $802 million in 2007 dollars, including ancillary construction activities related to the demolition of the existing Goethals Bridge, local roadway modifications, and the replacement of the Travis Branch Railroad overpass. These costs, however, do not include right-of-way or maintenance of traffic, allowance for special access requirements in the wetlands, wetlands restoration, utility relocation, engineering, or administration.

3.3.6 Conceptual Renderings of the Cable-Stayed Bridge

As presented in the preceding discussions, the alignments of any of the four Build Alternatives would be designed as a single-bridge configuration using a cable-stayed superstructure. Figures 3.3-9 through 3.3-13 provide conceptual renderings of a cable-stayed superstructure (or main span), which is generally applicable to any of the four alternative alignments.

3.4 Construction Methods

3.4.1 Introduction

In general, each of the four Build Alternatives consists of four sections of structure, presented below from west to east:

- New Jersey Turnpike approach
- New Jersey approach
- Main span
- New York approach

For the New Jersey and New York approaches, composite steel girders, composite pre-cast, pre-stressed concrete girders and concrete segmental, post-tensioned boxes are being considered. Only composite steel girders are considered for the New Jersey Turnpike approach. Also, due to the aviation height constraints that exist with regard to the main span, only a steel superstructure is considered for the main span.

The construction methodology for the three specific approach spans is the same for all four alignments, (i.e., Build Alternatives). Similarly, since the same structure types are under consideration for the approach spans associated with all four Build Alternatives, the same basic construction methodology is applicable to each approach span.

Presented below is a discussion of the general construction characteristics common to each Build Alternative, followed by specific descriptions of the construction methodology associated with each of the three approach spans (i.e., the New Jersey Turnpike approach, the New Jersey approach and the New York approach) which are common to all of the Build Alternatives. A description of the main span construction methodology is then provided, followed by a discussion of ancillary construction activities related to the demolition of the existing Goethals Bridge, local roadway modifications, and the replacement of the Travis Branch Railroad overpass.

3.4.2 Common Construction Characteristics

The following are general construction characteristics by approach structure type for either of the New Alignment Alternatives (i.e., New Alignment South and New Alignment North):

Steel girder superstructure:

- Construction duration of approximately 52 to 60 months, including demolition,
- Foundations of driven piles or drilled shafts,
- Cast-in-place or pre-cast concrete columns,
- Steel girder spans with cast-in-place decks for the approaches, and
- Steel cable-stayed main span unit.

Pre-cast, pre-stressed concrete superstructure:

- Construction duration of approximately 52 to 60 months, including demolition,
- Foundations of driven piles or drilled shafts,
- Cast-in-place or pre-cast concrete columns,
- Concrete girder spans with cast-in-place decks for the approaches, and
- Steel cable-stayed main span unit.

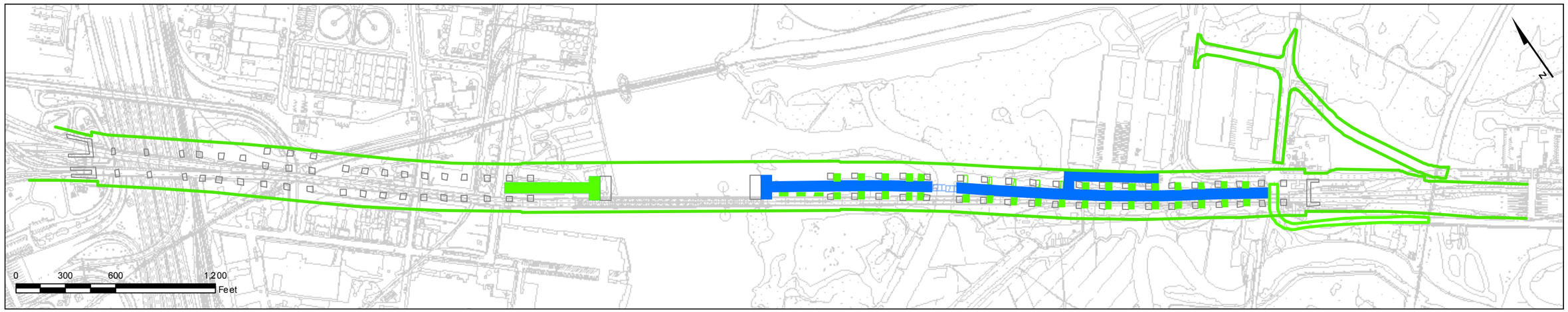

Existing Alignment North

Legend

Alignments

Right - of - Way Existing Alignment North

Bridge Structures

Pier/Tower

Permanent Roads for Construction/Maintenance/Security

On Fill

On Trestle

Temporary Fingers for Construction Only

On Fill

On Trestle

Goethals Bridge Replacement EIS

FIGURE 3.3-8

Existing Alignment North:
Proposed Access Road

United States Coast Guard

Figure 3.3-9 Conceptual Rendering of a Cable-Stayed Bridge – Bird's Eye View from South

Figure 3.3-10 Conceptual Rendering of a Cable-Stayed Bridge – View to Northeast from New Jersey

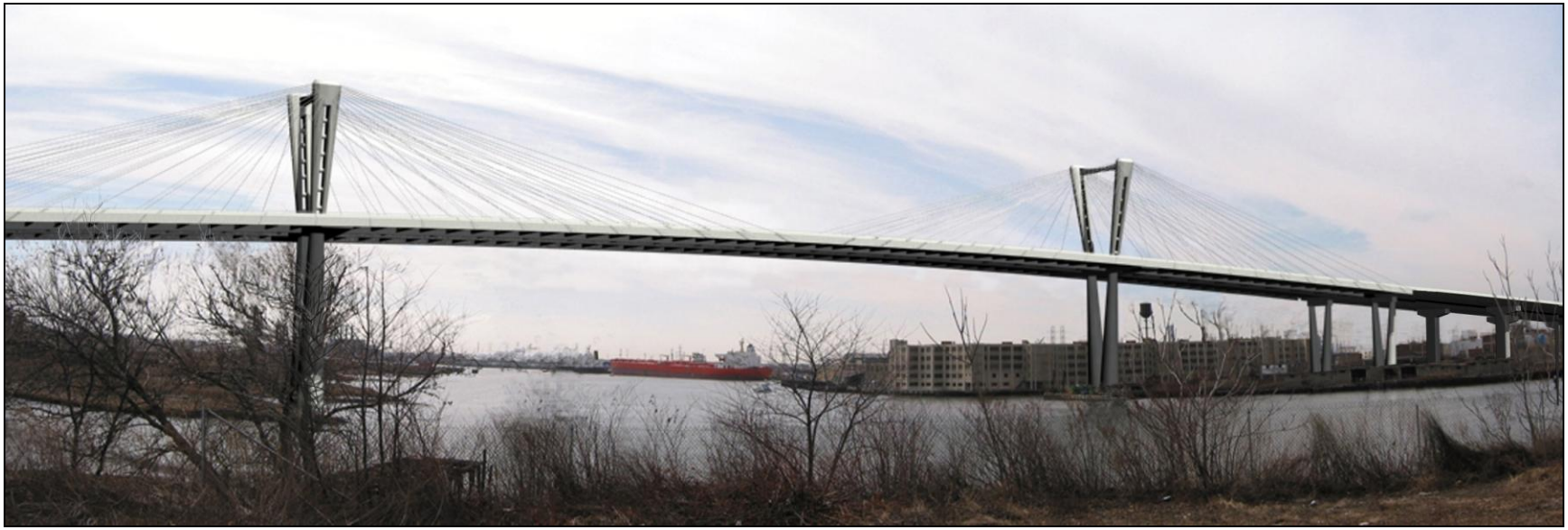

Figure 3.3-11 Conceptual Rendering of a Cable-Stayed Bridge – View to Southwest from NYCT

Figure 3.3-12 Conceptual Rendering of a Cable-Stayed Bridge – View to West from NY Toll Plaza

Figure 3.3-13 Conceptual Rendering of a Cable-Stayed Bridge - View of One Roadway Deck

Segmental concrete superstructure:

- Construction duration of approximately 52 to 60 months including demolition
- Foundations of driven piles or drilled shafts,
- Cast-in-place or pre-cast concrete columns,
- Pre-cast segmental box girder spans for the approaches, and
- Steel cable-stayed main span unit.

In the case of either of the Existing Alignment Alternatives (i.e., Existing Alignment South and Existing Alignment North), it is estimated that an additional 15 to 18 months would likely be required for construction, including demolition (i.e., approximately 65 to 78 months in total).

One of the initial mobilization efforts required by the contractor is setting up a staging area on each side of the Arthur Kill. This is essential for storage of the materials, pre-assembly activities and for office space for the construction effort. While the area could be subdivided into smaller parcels/warehouses, the total area needs to be approximately 5 acres on each side. These staging areas would be used for the duration of the construction and would be a delivery point for many construction vehicles. Although the precise locations of staging areas for equipment and construction materials have not yet been identified, they would not be located in wetlands.

Construction of each of the approaches is the same, regardless of alternative, and includes foundations, footings, columns and superstructure. The basic elements of construction (i.e., foundations, footings, columns, and superstructure) are presented below.

3.4.2.1 Foundations

The foundations for the three approaches would be either driven piles or drilled shafts, with a cast-in-place footing. At each superstructure support location, there would be a foundation under each column that supports the column cap beam. The footings at each foundation location would require excavation so that the bottom of the footing or concrete seal are below the ground level. Depending upon the depth of the excavation, sheet piling may be used to form the walls of the excavation. Sheet piles are driven into the ground by a vibratory pile hammer. It takes approximately three days to install the sheet piles at a foundation using a crane and a vibratory hammer. In locations where there is adequate room for an open sloped excavation and minimal ground water, the sheet piles may not be required.

Once the sheet piles are driven, if required, the foundation is excavated down to the bottom of the footing or concrete seal. The excavation is performed by backhoes that scoop the material and place it into dump trucks to carry it away. This operation for removing the soil from the ground takes about three days unless there are unusual or difficult conditions like rock, utilities, or unforeseen issues. Following the excavation, the foundation elements (drilled shafts or driven piles) are installed.

Drilled shafts are comprised of a hole drilled into the ground that is filled with reinforcement and concrete. A steel casing for a liner may be used to maintain the shape of the open shaft until the concrete can be placed. The casing may be left in place or pulled depending on shaft design requirements. Drilled shafts require more excavation than driven piles. The drilled shaft would extend down to the bedrock or very hard strata. Often the shaft is socketed into rock. Rock socketing necessitates the removal of large amounts of rock using drilling rigs. It is possible that drilling slurry (e.g., bentonite) may be used to keep the hole open while it is drilled. This is a thick mud-like substance that keeps the walls from caving in and the ground water out of the hole. When the hole is complete, the reinforcement is placed and concrete is pumped into the bottom of the shaft and the drilling slurry comes out of the top as it is displaced. The slurry spoils are recaptured to keep it out of the water or ground in the immediate area. This operation can take hours to complete and many concrete delivery trucks are needed to supply the concrete for the multiple shafts in each footing. This operation needs to be carefully planned by the contractor. One

option is that the contractor would set up an on-site concrete batch plant to supply the concrete necessary for the project.

Driven piles would consist of steel pipe piles, which are filled with concrete after being driven into the ground. The steel pipe pile would be manufactured off-site and barged or shipped to the project site at full length. Pipe pile lengths would not be expected to exceed 100 - 120 feet in length, which is capable of being delivered by truck. The hollow steel pipe would be driven into the ground either open ended or with an end cap (or shoe) by a pile driving hammer. The hammer is supported by a large crane and delivers a large amount of force to the top of the pipe pile. The pipe pile is hammered into the ground and as it gets deeper, the force of the hammer is increased to drive it harder to the appropriate depth and capacity. A contractor can usually drive the pipe piles for a single foundation in 2-3 days once the foundation is ready to receive piles. Once the pipe pile is driven, open ended pipes may be augered out and filled with concrete. The soil spoils are trucked away or re-used elsewhere if permitted. Closed-ended driven pipes are simply filled with concrete.

3.4.2.2 Footings

Once the piles are installed, a concrete seal is poured, and when it has reached sufficient strength, the cofferdam is dewatered. Following the dewatering, the footing reinforcement is placed and the concrete for the footing poured. A single footing can require several hundred cubic yards of concrete to be continuously placed. As this operation can take hours to complete, an on-site concrete batching facility would be considered to improve efficiencies and reduce concrete truck traffic, although such decision would be made in coordination with the contractor. Normally it takes about 1-3 weeks to form the footing, install the reinforcing steel and to place the concrete.

3.4.2.3 Columns

Columns may be cast-in-place or pre-cast with a cast-in-place cap beam. If cast-in-place, the contractor mobilizes cranes and forms to cast the columns. The columns vary in height and the taller columns are cast in multiple lifts. Usually a contractor will cast no more than 20 feet of column (lift) at a time. Normally it takes about one week to form the column, install the reinforcing steel and to place the concrete for each lift. The contractor would likely be casting multiple columns at the same time in different locations.

If the columns are pre-cast, a pre-cast operation would need to be set up either at the site or offsite. If offsite, large pre-cast box sections would be brought to the site by truck or barge. The sections would be placed by cranes and stacked one on top of the other until the column is completed. Vertical post-tensioning would then be applied to connect the sections together.

Once the columns are completed, the tops would be connected with a cast-in-place cap to support the superstructure. The cap is formed on falsework that either rests directly on the ground or on large steel frames connected to the columns. This is dependent upon the cap height, the ground level constraints and other factors. Constructing the caps takes 4 to 6 weeks to form the cap, install the reinforcing, cast the concrete and remove the falsework.

3.4.2.4 Superstructure

As noted previously, only composite steel girders are being considered over the New Jersey Turnpike. For the New Jersey and New York approaches, composite steel girders, composite pre-cast pre-stressed concrete girders and concrete segmental post-tensioned boxes are being considered.

The composite steel girder and composite pre-cast, pre-stressed girder superstructure would include multiple girders with a cast-in-place deck. The girders would be fabricated off site and shipped to the

site by truck or barge. If shipped by barge, the contractor would need to have a barge slip or wharf that could be used for unloading them. Alternatively, girders up to approximately 145 feet in length could be shipped by truck. A designated traffic route would be established along with any time limitations in order to facilitate delivery and minimize impacts. The girders are usually not extremely tall (8 feet approximate), and when they are on trucks and trailers they usually can pass under most overpasses; therefore, vertically they usually pose few transportation challenges.

There are multiple girders in each span and they span from pier cap to pier cap. The girders would be set using two large cranes. Where longer spans are required, the girders may be temporarily supported on a temporary pier and spliced with another girder to extend the span. As they arrive on trucks, the cranes would lift the girders into place. Setting the girders for a span takes several days or nights since the girders can only be delivered and set, one or two at a time.

Once the girders are set and secured, forms would set between the beams so that the concrete deck could be placed. Since the spans (girders and deck) would be built in the air, debris nets and fall protection may be required to protect public safety and to keep the construction debris from littering the area. It takes several weeks to a month to set the beams, install the forms, place the reinforcing steel, and pour the concrete deck for a span.

If the pre-cast segmental concrete box girder option is used for the superstructure, then the pre-cast segments would be manufactured off-site and shipped to the project. These precast segments are about 10 – 12 feet tall, 10 feet long and 56 – 64 feet wide. Each weighs about 110 tons. They would be shipped by truck or by barge and erected onto an erection truss that spans from column to column. The segments in a single span would be set onto the truss by a crane that is located either on the construction access road or on the previously completed span. The segments are then stressed together with post-tensioning. The contractor can build an average of two spans per week.

3.4.3 Construction of Specific Approach Spans

3.4.3.1 New Jersey Turnpike Approach

The approximately 690-foot section of structure to be built over the New Jersey Turnpike extends eastward from the project's New Jersey abutment, located west of the Turnpike, to the standard New Jersey approaches located just east of the Conrail rail lines that parallel the Turnpike. The proposed structure is a five-span continuous multiple steel girder structure with a composite concrete deck, which would eliminate columns between the inner and outer barrels southbound and northbound, while increasing clearance under the structure to a standard 16 feet, 6 inches.

In general, construction staging over the New Jersey Turnpike would involve coordination with the Turnpike Authority's operations. Nighttime slow downs and/or short closures of the Turnpike roadway would be necessary for safety during demolition of the existing structure and placement of the proposed girders. Standard protection measures for construction over live traffic are anticipated once the proposed girders are in place. Typically, the construction phases would include:

Phase 1: Convert one existing roadway over the New Jersey Turnpike to bi-directional traffic and divert all traffic

Phase 2: Demolish unused section of existing roadway and construct new structure in demolished structures' right-of-way. Prepare new structure for bi-directional traffic.

Phase 3: Divert all traffic from existing structure onto newly constructed structure.

Phase 4: Demolish remaining existing structure and begin construction of new structure.

Phase 5: Upon completion of structure, divert traffic for dedicated eastbound and westbound travel.

3.4.3.2 New Jersey Approaches

The New Jersey approaches would begin at the tie-in to the New Jersey Turnpike approaches, at the east edge of the rail line adjacent to the Turnpike, and would continue eastward to the main span unit. The approximate length of the New Jersey approaches is 2,700 feet, with approximately 12 to 15 spans, depending on the superstructure type.

3.4.3.3 New York Approaches

The New York approaches would begin at the New York abutment and extend westward for approximately 2,900 feet to the main span unit, with approximately 18 spans. There is a large portion of these approaches that would cross the wetlands at the edge of the Arthur Kill. Much of the construction work would need to be performed from an access road or trestle. The access road or trestle, which was previously discussed for each of the four Build Alternatives, is proposed to provide for material delivery and crane erection.

3.4.4 Main Span Construction Alternatives

The main span crosses the Arthur Kill and connects the New Jersey and New York approaches. Much of the construction work would need to be performed from an access road or trestle extending to each main pier/pylon. The access road or trestle would have "finger piers" extending from them to the side of each pier location.

The previously defined construction methodology for the foundations, columns and footings are common, with the only differences being for the construction of piers/pylons and the superstructure erection.

3.4.4.1 Piers / Pylons

At completion, the piers/pylons for the cable-stayed bridge would extend from the footing (at ground-level) to a point approximately 120 feet above the deck level. The piers/pylons would be cast-in-place or pre-cast concrete sections. Once the footing concrete is cured, the contractor would mobilize cranes to cast the piers/pylons or place the pre-cast pier sections. For the cast-in-place option, the pier/pylons would be cast in multiple lifts. Usually a contractor will cast no more than 10 – 20 feet of pier/pylon at a time. Normally it takes about one week to form the pylon lift, install the reinforcement and place the concrete. For the pre-cast option, the contractor would stack the pre-cast sections and install vertical post-tensioning. The contractor would use cranes working off of the work trestles or barges for the lower portions up to the superstructure level, but eventually would install tower cranes for use in construction of the upper pylon of the cable stayed alternative. A tower crane is a self-climbing crane that can move up as the construction moves up. It is typically 50 feet above the top of the construction; therefore, the aerial encroachment of the tower crane needs to be evaluated for clearance of aircrafts.

Stay-cable anchorages would begin in the pylon at approximately 50 feet above deck level and continue until near the pylon top. Construction of a single pylon takes approximately 10 to 16 months. During this time and throughout the cable-stayed superstructure erection, the contractor would request permission to erect tower cranes that are higher than the top of the pylon. Aviation beacons would be placed at the top of the tower cranes and pylon.

3.4.4.2 Superstructure

Methods of constructing the superstructure would vary, whether the alignment is constructed as a new alignment (i.e., either of the New Alignment Alternatives) or as an alignment sharing the existing bridge alignment (i.e., either of the Existing Alignment Alternatives). Construction methods for these two types of alignment alternatives are discussed below.

The superstructure may consist of either steel boxes or steel edge girders and steel floor beams with a pre-cast deck supported by stay cables. The boxes, girders, floor beams and precast deck panels would be manufactured offsite and shipped to the site by truck or barge. If they are to be shipped by barge, the contractor would need a means for unloading them to construct the back spans. This would require a barge slip or wharf that would be used during the construction. The work trestle could possibly be the wharf for unloading materials delivered by barge. For the main span, the steel elements and precast deck panels could be stored on the barges at the site along the edges of the Arthur Kill (outside the shipping channel).

New Alignment Alternatives

The construction of either of the New Alignment Alternatives would be performed by balanced cantilever, starting at the pylon. The contractor would build a 40 to 50 foot long section on either side of the pylon by erecting steel edge girders and floor beams for both eastbound and westbound roadways, and then installing stay cables to support the new section. Pre-cast deck panels would then be placed onto the steel framing and concrete closure pours would be made. For the back spans, erection of steel elements and pre-cast deck panels would be performed by cranes working from the access roads or trestles. For the main span unit over the Arthur Kill, cranes mounted on barges would be floated into place to erect the steel sections and pre-cast deck panels. This process would continue out from both pylons until the superstructure reaches the approach pier or meets in the middle of the main span. This construction process would take approximately 10 - 14 months for the main span superstructure construction. For construction activity over the shipping channel, temporary closures of the channel would be required. The contractor would be required to coordinate this activity with the Coast Guard. It is estimated that there would be approximately 50 temporary channel closures to complete the main span. Temporary closures are typically only a couple of hours in duration.

Since the spans would be built over the waterway, land and wetlands, debris nets and fall protection would be necessary in this area. Any material that falls must be caught to avoid the public, as well as to keep the construction debris from littering the wetlands area.

Existing Alignment Alternatives

The construction of the cable-stayed bridge for either of the Existing Alignment Alternatives would generally follow the same methodology as for either of the New Alignment Alternatives, except that only one-half of the roadway would be constructed initially. In the case of the Existing Alignment South, the southern deck would be constructed first, while in the case of the Existing Alignment North, the northern deck would be constructed first. Construction would begin with the main pylon foundations and pylon legs in a manner similar to that previously discussed. When the pylon construction is completed, a tie-down cable(s) is connected to the tower top and anchored to the main foundation. When the tie-down is completed, construction of the first deck and its associated stay cables is performed in a manner similar to that for the New Alignment Alternatives.

After the first deck has been fully constructed and temporarily been put into operation to serve two-directional traffic, the existing bridge would then be demolished, followed by construction of the remaining deck which would be placed along the general alignment of the existing bridge. When

completed, the tie-down cable would be removed and the two decks / roadways would each serve separate directions of traffic. This method of construction is referred to as the "half-width" construction method.

3.4.5 Maintenance and Protection of Traffic (MPT) During Construction

3.4.5.1 New Alignment South

New Jersey construction traffic staging for this alternative is proposed to use temporary at-grade roadway within New Jersey Turnpike Interchange 13, in order to place both eastbound and westbound traffic on the existing westbound transition structure over the Turnpike. East of the Turnpike, the westbound structure would be temporarily widened during this phase. This would permit construction/demolition access to the eastbound transition structure until traffic is moved to a new eastbound structure, at which time construction / demolition access to the remaining westbound structure would be implemented.

The MPT plan for the western terminus of the New Jersey portion of the study area where the approach ramps connect with other roadways is summarized as involving the following five distinct stages:

1. Widen the existing westbound portion of the New Jersey Turnpike approach for bi-directional traffic.
2. Shift I-278 westbound traffic to the reconstructed shoulder on the existing westbound approach structure.
3. Shift westbound traffic north into two 10-foot lanes on the existing westbound approach structure; shift eastbound traffic to two 10-foot lanes on the westbound approach structure; demolish the existing eastbound transition structure and its abutment; and construct the new eastbound approach structure.
4. Shift eastbound and westbound traffic onto the new eastbound approach structure; reverse traffic flow on the Atlantic Avenue eastbound ramp to accommodate westbound local traffic; demolish the hollow abutment and the existing structure; and construct the new westbound approach structure.
5. Shift westbound traffic onto the finished, new westbound approach structure.

The MPT plan for the New York side would utilize temporary at-grade roadways, but without a need to accommodate multiple merging ramps. The New York construction staging for the New Alignment South would be based on maintaining the eastbound and westbound traffic on the existing Goethals Bridge while a new eastbound approach structure is built from the New York abutment to the main span. Upon completion of the new eastbound structure, the structure would be temporarily striped for bi-directional traffic. Upon completion of the New Jersey eastbound approach and main span structure, the traffic on the New York side would be shifted onto temporary at-grade pavement at the east portion of the alignment. Demolition of the existing Goethals Bridge would then proceed. When the proposed New York westbound approach is completed, westbound traffic would be shifted onto it, and the eastbound structure would be restored for dedicated use by eastbound traffic.

3.4.5.2 New Alignment North

It is proposed that the New Jersey construction traffic staging for the New Alignment North be based on using temporary at-grade roadways within the New Jersey Turnpike interchange, in order to place both eastbound and westbound traffic on the existing eastbound transition structure over the Turnpike. East of the Turnpike, the eastbound structure would be temporarily widened during this phase. This would permit construction/ demolition access to the westbound transition structure until traffic can be moved to a new westbound structure, at which time construction / demolition access to the remaining eastbound structure would be implemented.

The MPT plan for the western terminus of the New Jersey portion of the study area where the approach ramps connect with other roadways involves the same five stages as for the New Alignment South. The MPT plan for the New York side would also be similar to that described for the New Alignment South.

3.4.5.3 Existing Alignment South

It is proposed that the New Jersey construction traffic staging for the Existing Alignment South be based on using temporary at-grade roadways within the New Jersey Turnpike interchange, in order to place both eastbound and westbound traffic on the existing westbound transition structure over the Turnpike. East of the Turnpike, the westbound structure would be temporarily widened during this phase. This would permit construction/ demolition access to the eastbound transition structure until traffic can be moved to a new eastbound structure, at which time construction / demolition access to the remaining westbound structure would be implemented.

The MPT plan for the western terminus of the New Jersey portion of the study area where the approach ramps connect with other roadways involves the same five stages as for the New Alignment South. The MPT plan for the New York side would also be similar to that described for the New Alignment South.

3.4.5.4 Existing Alignment North

It is proposed that the New Jersey construction traffic staging for the Existing Alignment North be based on using temporary at-grade roadways within the New Jersey Turnpike interchange, in order to place both eastbound and westbound traffic on the existing westbound transition structure over the Turnpike. However, east of the Turnpike, the staging would be significantly more complex than that proposed for the northern portion of the New Alignment North, in that it would require elevated temporary structure to be built in order to shift traffic further to the north. The new westbound structure would then be constructed north of the existing bridge, but only as far as this would be possible until it would conflict with the existing structure, at which point a temporary, high-level structure would be required to tie the new westbound structure to the existing bridge.

The existing eastbound structure over the Turnpike would then be demolished, and a new eastbound structure would be constructed over the Turnpike, and eastward up to the point where it would conflict with the existing bridge. The new westbound structure would then be striped for bi-directional traffic, and all traffic would be routed onto it to cross over the Turnpike, and onto the temporary connection to the eastern portion of the new westbound structure, over to New York. The existing bridge would then be demolished from the westbound tie-in eastward to New York, and the new eastbound structure would be completed. A high-level, temporary connection would be required in order to move all traffic onto the new eastbound portion over the Turnpike, and then onto the new westbound approach. This would permit access to the portion of the existing westbound transition structure over the Turnpike for demolition and construction. Upon completing all portions of the structures, traffic would then be served by the new dedicated eastbound and westbound structures.

The MPT plan for the New York side would be similar to that described for the New Alignment South.

3.4.6 Demolition of the Existing Goethals Bridge

The existing Goethals Bridge is a 7,413-foot long structure carrying two 10-foot wide traffic lanes in each direction between Elizabeth, NJ and Staten Island, NY. The bridge also includes two sidewalks outside of the traffic lanes in each direction. The overall layout consists of:

- A 2,381-foot long New Jersey approach span (with 36 segments) and a separate eastbound approach ramp merging with the main bridge over the NJ Turnpike and Conrail's Chemical Coast Secondary Line;

- A 1,152-foot long cantilevered truss bridge (with 3-span units) over the Arthur Kill, with a main span of 672 feet and two symmetric back spans of 240 feet each;
- A 3,126-foot long New York approach span (with 37 segments); and
- Two hollow abutment sections on the New Jersey and New York sides of 178 feet and 126 feet in length, respectively.

The approach span superstructures are of steel composite construction with a typical out-to-out width of 53 feet. The cantilevered truss superstructure has an overall out-to-out width of 62 feet and 3¼ inches. The four main piers supporting the truss superstructure (known as Piers A through D in a west-to-east direction) are founded on caisson-type foundations extending to bedrock. The pier columns start at an elevation of 12 feet, and are supported by a partially hollow pedestal rising from the top of the solid footing block. The deepest of the foundations reaches to a depth of 70 feet for Pier C on the eastern side of the Arthur Kill. Pier C, being the only main pier located within the Arthur Kill, is abutted by two sets of protective dolphins on its north and south sides. The New Jersey approach piers (a total of 36 piers) are founded on individual caissons extending to bedrock whereas most of the New York approach piers (a total of 37 piers) are supported on timber pile foundations with a concrete cap.

Following completion of the replacement bridge construction (or following completion of the first half of the bridge in the case of either of the Existing Alignment Alternatives), the existing Goethals Bridge and its approaches would be demolished. Demolition would include structure removal, clearing, grubbing, and grading on land parcels to be partially or entirely acquired (or, where applicable, under temporary construction easements), and would remove all sections of the existing bridge, including its main truss span, its New Jersey and New York approach spans, its New Jersey eastbound approach ramp, and its New Jersey and New York hollow abutments. All pier foundations (including columns and footings) would also be removed up to a depth of at least 2 feet below mud line or final grade. Only Pier C and its protective dolphins, located near the Federally-designated navigation channel of the Arthur Kill, would be entirely removed down to a target depth of 52 feet below mean low water (MLW) or down to bedrock (whichever comes first) in order to accommodate any future navigation channel widening.[12] Depending on the type of Build Alternatives to be selected (i.e., New Alignment versus Existing Alignment alternatives), the timing sequences would obviously vary by alignment, but in general, it is anticipated that demolition of the existing bridge would continue for approximately 7 to 14 months[13].

Some of the main truss elements in the main span could be removed in large sections, potentially by disconnecting the sections and lowering them onto a barge or barges. This demolition process is often called reverse construction. The suspended span would first be lightened by removing its concrete roadway (including steel stringers). The deck would be removed by saw-cutting it in sections that could be handled by deck-supported equipment. The suspended main span could then be lowered as one unit onto barges below, using strand jacks mounted on the cantilever ends of the truss main span. During such effort, an 8-hour navigational channel closure can be anticipated. The two truss back spans would be dismembered by torch-cutting following deck removal, and then lowered from the shoreline by a crane or derrick suitably supported on truss floor beams.

The decks of the approach spans would be saw-cut into manageable sections and placed into trucks to be hauled away. Following the deck slab removal, the steel framing would be torch-cut. Concrete would likely be chipped into smaller pieces using a hoe-ram attachment on a backhoe. Soil and other debris would be removed with backhoes, bulldozers, and dump trucks. Reinforcing steel would be removed with cranes, backhoes and dump trucks. Structural steel would be removed with cranes and trucks.

[12] The exact depth removal of Pier C will be determined at final design and upon further consultation between the USCG and USACE.

[13] Cost and duration of the existing bridge's demolition are included in the total cost and duration presented in Sections 3.3 and 3.4.2, respectively, for each alternative.

Subsequently, the pier foundations (including columns and footings) of the main and approach spans, along with the existing abutments, would be removed using a variety of methods and machines. Whenever possible for all pier foundations and abutments, controlled explosives may be used with an enclosure for containment in order to facilitate debris removal with a clam bucket. Given the volume of pier concrete, the large quantity of material generated may not make it practical to contain them within a reasonably-sized enclosure. Therefore, in-water demolition work for the main piers (including Pier C's protective dolphins), along with the three New Jersey approach piers located either in the Arthur Kill or the interpier basin (Piers 1W though 3W), would require the use of temporary cofferdams in order for pier foundations to be dismantled into parts by diamond-cutting and then moved in sections onto barges. The deeper pier pedestals and concrete footing blocks would, however, be removed with the use of controlled explosives (within the cofferdam) in order to remove them to the required depths.

Quantities of materials to be demolished have been estimated at 16,100 tons of structural steel and 52,570 cubic yards of concrete. All demolished material would be disposed of properly. Scrap steel that has commercial value would be trucked or barged to recycling facilities.

3.4.7 Local Roadway Modifications

In Staten Island, both Goethals Road North and Gulf Avenue are one-way streets, located on either side of the I-278 right-of-way. Together, they provide a circular local traffic pattern to the residents of Goethals Garden Homes and businesses that need to access the broader street network of Staten Island as well as I-278 at Forest Avenue. In addition, this circular traffic pattern is critical to the NYCT operations at Howland Hook since it provides the sole ingress/egress access to the terminal main entrance located at the intersection of Goethals Road North, Gulf Avenue and Western Avenue.

Due to different engineering and traffic constraints further detailed below, these two local roadways would need to be modified under any of the Build Alternatives. At this early stage of design, it is anticipated that these roadway modifications would occur concurrently with the replacement of the Goethals Bridge for any of the Build Alternatives.

3.4.7.1 Re-alignment of Gulf Avenue

Under all of the Build Alternatives, existing Gulf Avenue would have to be slightly re-aligned in order to accommodate the pier placements for the proposed New York approach span, as well as to improve already existing vertical clearance issues for trucks that are required to make tight turns eastward while leaving the area. Gulf Avenue would have to be re-aligned similarly for all Build Alternatives, as depicted for each alternative on Figures 3.3-1, 3.3-3, 3.3-5, and 3.3-7. It should be noted that the Gulf Avenue re-alignment would also require the minor relocation of several Con Edison electric lines, both aerial and underground.

3.4.7.2 Relocation of Goethals Road North

For either of the two Northern Alternatives, including New Alignment North and Existing Alignment North, the new elevated and at-grade portions of the New York approach would result in direct encroachment on Goethals Road North, and would also affect the NYCT's main entrance. To that effect, a continuous relocation of Goethals Road North would be required between the Travis Branch Railroad and Western Avenue, as well as further west to a newly relocated NYCT's main entrance and truck gates; such relocation is required in order to maintain a direct and non-circuitous truck access route to and from the marine terminal.

Goethals Road North would have to be relocated similarly for both Northern Alternatives, as depicted in Figures 3.3-3 and 3.3-7. Such roadway relocation would require the new right-of-way to be located

within a vacant land parcel owned by Texas Eastern, as well as the northern and mostly unused portion of the existing Coca-Cola distributorship on Western Avenue. Slight roadway and intersection improvements (e.g., repaving and re-striping) along Western Avenue would also be required as part of the relocation of Goethals Road North. The alignment for this proposed relocation was developed on the basis of known environmental constraints to the north (i.e., wetlands of Goethals Pond), as well as commercial constraints to the south (i.e., Texas Eastern and KeySpan's gas metering facilities and the Coca-Cola warehouse). Preliminary coordination with local stakeholders (notably Duke Energy/Texas Eastern, KeySpan, NYCT, and the City of New York) enabled the development of such roadway relocation while minimizing environmental and business impacts.

3.4.8 Replacement of the Travis Branch Railroad Overpass

The Travis Branch Railroad, which is also part of the larger Staten Island Railroad (SIRR) network, was reactivated in 2006 and is rated for heavy freight. With the recent reactivation of freight rail services along the SIRR network, including the Arthur Kill Lift Bridge as well as intermodal services at the ExpressRail Staten Island facility (i.e., NYCT's ship-to-rail facility located at the former Proctor & Gamble site) and the Arlington Yards facility, the four-mile segment of the Travis Branch Railroad operated by CSX runs along Staten Island's western shore and serves several businesses such as: the NYC Department of Sanitation's Fresh Kills Transfer Facility, Visy Paper (former Pratt Industries), and the VanBro Corporation, all located to the south; as well as the NYCT's ExpressRail Staten Island and the Arlington Yards facilities to the north.

At the Travis Branch Railroad Overpass (a.k.a., "Travis Bridge") over I-278 and city streets (i.e., Gulf Avenue and Goethals Road North), the existing at-grade highway between the existing Goethals Bridge's New York approach and the New York toll plaza is approximately 1,400 feet in length and consists of two westbound and two eastbound lanes. After passing underneath the Travis Bridge, the two eastbound lanes begin to widen into multiple lanes to accommodate the last 550 feet of roadway before the toll plaza. The current span arrangement of the Travis Bridge provides only sufficient horizontal clearance to accommodate two traffic lanes in each direction with no shoulders since the Travis Bridge piers are located directly adjacent to either side of both the westbound and eastbound travel lanes. Therefore, there is no potential to widen either roadway without requiring replacement of the existing span arrangement.

For any of the Build Alternatives, a new span arrangement with new substructure and superstructure would be necessary to accommodate the widened at-grade roadway consisting of three travel lanes in each direction. In addition, the existing 16-foot vertical clearance envelope would be modified to a minimum of 16 feet and 6 inches in order to meet current AASHTO highway standards. At this early stage of design, it is also anticipated that a two-through-span girder superstructure with an intermediate pier placed between the eastbound roadway and the future mass transit corridor would be proposed upon final alternative selection. Such configuration with two equal spans of approximately 100 feet would be sufficient for accommodating the widened roadway and a double set of light rail tracks, should an LRT line be warranted in the future within the mass transit corridor[14]. Figure 3.3-12 provides a conceptual rendering of such arrangement. In order to minimize interruptions to current rail operations, construction of the new Travis Bridge would be performed using a roll-in operation. The new railroad bridge would be constructed on temporary piers adjacent to the existing one. After constructing the new piers and abutments, demolition of the existing railroad bridge along with roll-in of the new span would take place over a single weekend[15].

[14] For the purpose of sound design while replacing the Travis Bridge, a worst-case scenario is assumed whereas two LRT tracks (as opposed to BRT) would need to be built in the future. To that effect, and in order to achieve maximum design flexibility for standard railroad vertical clearances, the LRT corridor would be depressed and constructed into a bathtub section below the Travis Bridge.

[15] Cost and duration of the Travis Bridge reconstruction are included in the total cost and duration presented in Sections 3.3 and 3.4.2, respectively, for each alternative.